QRG

# ICU Terminal

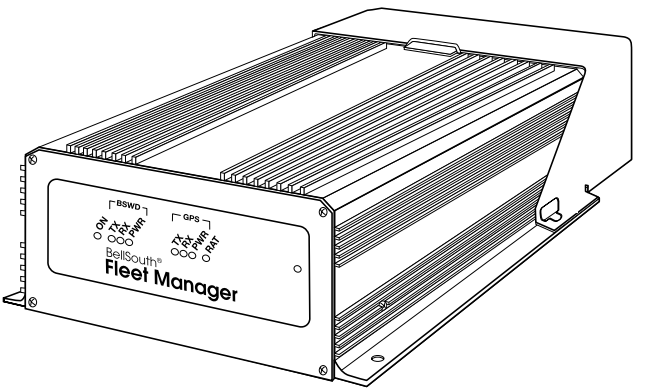


symbol®

© 2000 SYMBOL TECHNOLOGIES, INC. All rights reserved.

Symbol reserves the right to make changes to any product to improve reliability, function, or design.

Symbol does not assume any product liability arising out of, or in connection with, the application or use of any product, circuit, or application described herein.

No license is granted, either expressly or by implication, estoppel, or otherwise under any patent right or patent, covering or relating to any combination, system, apparatus, machine, material, method, or process in which Symbol products might be used. An implied license only exists for equipment, circuits, and subsystems contained in Symbol products.

Symbol and the Symbol logo are a registered trademarks of Symbol Technologies, Inc. Other product names mentioned in this manual may be trademarks or registered trademarks of their respective companies and are hereby acknowledged.

Symbol Technologies, Inc.
One Symbol Plaza
Holtsville, N.Y. 11742-1300
http://www.symbol.com

**Patents**

This product is covered by one or more of the following U.S. and foreign Patents:
U.S. Patent No. 4,460,120; 4,496,831; 4,593,186; 4,603,262; 4,607,156; 4,652,750; 4,673,805; 4,736,095; 4,758,717; 4,816,660; 4,845,350; 4,896,026; 4,897,532; 4,923,281; 4,933,538; 4,992,717; 5,015,833; 5,017,765; 5,021,641; 5,029,183; 5,047,617; 5,103,461; 5,113,445; 5,130,520; 5,140,144; 5,142,550; 5,149,950; 5,157,687; 5,168,148; 5,168,149; 5,180,904; 5,216,232; 5,229,591; 5,230,088; 5,235,167; 5,243,655; 5,247,162; 5,250,791; 5,250,792; 5,260,553; 5,262,627; 5,262,628; 5,266,787; 5,278,398; 5,280,162; 5,280,163; 5,280,164; 5,280,498; 5,304,786; 5,304,788; 5,306,900; 5,321,246; 5,324,924; 5,337,361; 5,367,151; 5,373,148; 5,378,882; 5,396,053; 5,396,055; 5,399,846; 5,408,081; 5,410,139; 5,410,140; 5,412,198; 5,418,812; 5,420,411; 5,436,440; 5,444,231; 5,449,891; 5,449,893; 5,468,949; 5,471,042; 5,478,998; 5,479,000; 5,479,002; 5,479,441; 5,504,322; 5,519,577; 5,528,621; 5,532,469; 5,543,610; 5,545,889; 5,552,592; 5,557,093; 5,578,810; 5,581,070; 5,589,679; 5,589,680; 5,608,202; 5,612,531; 5,619,028; 5,627,359; 5,637,852; 5,664,229; 5,668,803; 5,675,139; 5,693,929; 5,698,835; 5,705,800; 5,714,746; 5,723,851; 5,734,152; 5,734,153; 5,742,043; 5,745,794; 5,754,587; 5,762,516; 5,763,863; 5,767,500; 5,789,728; 5,789,731; 5,808,287; 5,811,785; 5,811,787; 5,815,811; 5,821,519; 5,821,520; 5,823,812; 5,828,050; 5,850,078; 5,861,615; 5,874,720; 5,875,415; 5,900,617; 5,902,989; 5,907,146; 5,912,450; 5,914,478; 5,917,173; 5,920,059; 5,923,025; 5,929,420; 5,945,658; 5,945,659; 5,946,194; 5,959,285; 6,002,918; 6,021,947; 6,047,892; 6,050,491; 6,053,413; 6,056,200; 6,065,678; 6,067,297; 6,068,190; D305,885; D341,584; D344,501; D359,483; D362,453; D363,700; D363,918; D370,478; D383,124; D391,250; D405,077; D406,581; D414,171; D414,172, D419,548; D423,468; D424,035.
Invention No. 55,358; 62,539; 69,060; 69,187 (Taiwan); No. 1,601,796; 1,907,875; 1,955,269 (Japan).
European Patent 367,299; 414,281; 367,300; 367,298; UK 2,072,832; France 81/03938; Italy 1,138,713.
rev. 06/00

## Introduction

The SAIC In-Vehicle Control Unit (ICU) is a rugged computer developed by Symbol for SAIC, and used as a platform for in-vehicle communications. It provides wireless network communications and two serial ports.

The ICU uses an 80386 processor and supports an MS-DOS Operating System using industry standard protocols.

### About This Guide

This manual describes the ICU's basic features. Specific topics include:


- *Parts of an ICU* on page 2
- *Basic Operation* on page 3
  - *Indicator Lights* on page 3
  - *Ports and Connectors* on page 4
  - *Resetting the ICU* on page 5
- *Driver Alert Features* on page 6
- *Basic Troubleshooting* on page 8
- *Service Information* on page 10


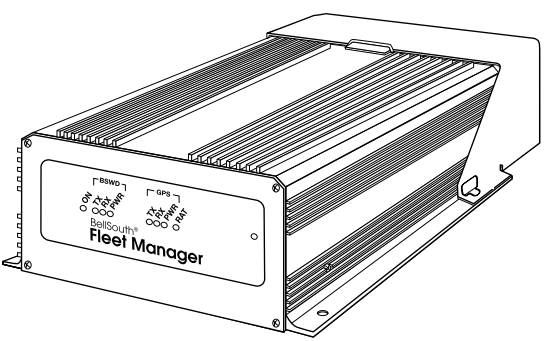


**Figure 1. ICU with Access Denial Cover in Place**

# Parts of an ICU

## Symbol Parts

The ICU has these parts and features provided by Symbol:

- 2 MB of DRAM, expandable to 4MB
- 2 MB Flash Drive, expandable to 8MB
- RS-232 COM1 serial port
- In-Vehicle Alert (IVA) port
- 2 RAT Key Fobs
- Connectors for RAT, GPS and BSWD antennas
- Access Denial Cover
- Quick Reference Guide

## SAIC Parts

The ICU also requires these parts provided by SAIC:

- RAT, GPS and BSWD antennas and cables
- Power Input cable with 2 fuses
- IVA cables
- Manufacturing Mode cable for communication with a PC
- Ground cable required for installation
- Fasteners required for installation

## ICU Software

The ICU terminal runs SAIC custom software from a DOS Operating System.

# Basic Operation

## Indicator Lights

A standard ICU terminal runs as a stand-alone device, with no keyboard or display. The front panel has eight LED indicator lights on that provide this status information (read from left to right):

| LED | Description |
|---|---|
| ON | ICU power indicator. |
| BSWD TXD | BSWD is transmitting. |
| BSWD RXD | BSWD is receiving. |
| BSWD PWR | BSWD has power. |
| GPS TXD | GPS is transmitting. |
| GPS RXD | GPS is receiving. |
| GPS PWR | GPS has power. |
| RAT | Remote Alert Transmitter mode/status. See *Driver Alert Features* on page 6. |

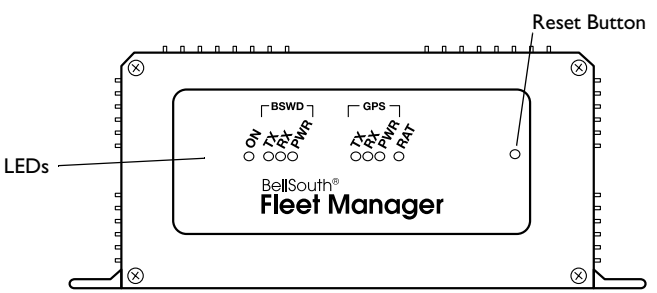


**Figure 2. ICU Indicator Lights**

## Ports and Connectors

The connector panel of the ICU unit has two ports, a power connector, the RAT programming button and three antenna connectors. The table describes these ports and connectors.

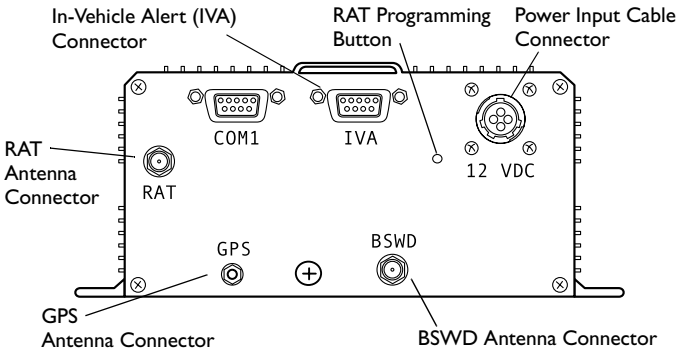


**Figure 3. ICU Ports and Connectors (SAIC model)**

| Connector | Function |
|---|---|
| COM1 | An RS-232 serial port with a 9-pin connector that can be used to communicate with devices such as laptop PCs. It connects to an RS-232 port on a Host PC using a specialized null modem cable. |
| IVA | A connector for the In-Vehicle Alert (IVA) cable. |
| 12 VDC | The Power Input cable plugs into this connector to provides power to the unit. |
| RAT Programming Button | A recessed button that allows you to program the Remote Alert Transmitter (RAT). See page 6 for more information. |
| RAT | A connector for the RAT radio antenna. |
| GPS | A connector for the GPS radio antenna. |
| BSWD | A connector for the BSWD (Mobitex) radio antenna. |

## Resetting the ICU

If the ICU stops responding, or stops receiving and sending data, you may need to reset it. The Reset button is a recessed switch located on the front panel, to the right of the LEDs.

To reset the unit, press and hold the Reset switch for more than one second, and then release it.

## Temperature

Operating Temperature range: -20°C to +60°C

Storage Temperature range: -40°C to +70°C

## Driver Alert Features

Each ICU unit has a Remote Alert Transmitter (RAT). The RAT is a device that allows vehicle drivers to send a message if they need immediate assistance. There are two ways for a driver to trigger an alert:

- In-Vehicle Alert button (IVA)
- RAT Wireless Key Fob button

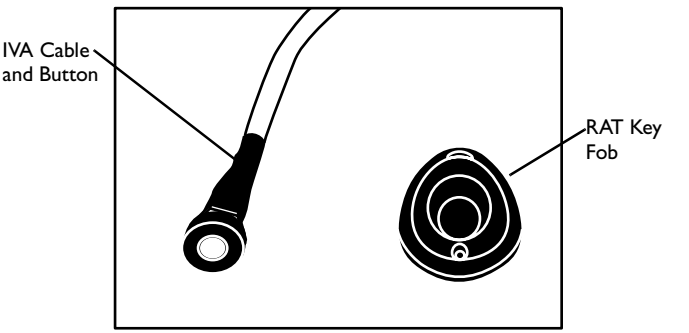


**Figure 4. Driver Alert Options**

### Sending an Alert

When the driver triggers an alert, the ICU immediately wakes up and sets a bit in Port 211 so that the software can transmit an alert. The table below describes the two methods for a driver to send a RAT alarm.

| Alarm Type | How to Send It | Requirements |
|---|---|---|
| IVA | Press one of the IVA buttons that are directly wired into the ICU unit: one in the vehicle cab, and one in the back of the truck. | The driver must be in the cab or the back of the vehicle. |
| RAT Key Fob | Press the button on the RAT Key Fob. | Driver must be within 150 feet of the vehicle, and within line of sight. |

## Programming the Remote Alert Transmitter (RAT)

The ICU must be programmed to recognize a transmission from a wireless RAT Key Fob. Each vehicle driver will have a RAT Key Fob.

### *Programming a RAT Button*

To program the ICU to recognize a particular RAT Key Fob:

1. Remove the Access Denial Cover to get access to the RAT Programming button located on the ICU connector panel.
2. Press and release the RAT Programming button on the ICU. Use a pen tip or similar object to press the recessed button. On the front panel, the LED for the RAT will show a solid light, indicating that the terminal is in *Learn* mode.
3. When you see the solid RAT LED, you have 10 seconds to press the Key Fob button in this sequence:
   a. Press and release the RAT Key Fob button.
   b. Press and hold the RAT Key Fob button until the RAT LED indicator starts to blink on the ICU.
4. The blinking light shows that the RAT Key Fob has been successfully programmed. It will trigger a RAT alarm if a driver presses the RAT button on the Key Fob.

### *Deleting a RAT Button*

This procedure deletes the programming information for all RAT Key Fobs programmed into an ICU:

1. Remove the Access Denial Cover to get access to the RAT Programming button located on the back panel of the ICU.
2. Press and hold the RAT Programming button on the ICU. Use a pen tip or similar object to press the recessed button. On the front panel, the RAT LED shows a solid light.
3. Wait for the RAT LED to turn off. Then release the RAT Programming button.
4. All programming information has now been deleted from the ICU. Pressing a RAT Key Fob button will not trigger an alert. Note that this does not affect theIVA Alert buttons.

## Basic Troubleshooting

This table provides guidelines for troubleshooting some basic problems on the ICU. If you cannot solve the problem using these guidelines, please contact Customer Service for advanced troubleshooting and repair.

| Problem | Action |
|---|---|
| Terminal does not start. | Make sure the External Power cable is connected to the ICU terminal and to a vehicle power source. |
| | Check the vehicle battery. If it is depleted (dead), replace the vehicle battery. |
| | Make sure the Vehicle Accessory Power (ACC) wire is connected to a switched 12 VDC Power Source. If it is not, then vehicle ignition will not wake the terminal. |
| In-Vehicle Alert (IVA) does not work. | Make sure the IVA cable has not come unplugged from the ICU terminal . |
| | Make sure neither of the IVA buttons has been stuck in the “on” position. If this happens, it prevents either IVA cable or the RAT Key Fob buttons from working. |
| | Check for obvious problems with the cable, or with the ICU hardware. |
| Remote Alert (RAT) does not work. | Make sure the terminal has been programmed to work with the RAT Key Fob. Clear the RAT Programming from the ICU. Then reprogram it with the existing RAT Key Fob. See page 7 for instructions. |
| | The RAT Key Fob may be faulty. Repeat the programming process with a new RAT Key Fob. |
| | Make sure neither of the IVA buttons has been stuck in the “on” position. If this happens, it prevents either IVA cable or the RAT Key Fob buttons from working. |

| Problem | Action |
|---|---|
| GPS data is missing or incorrect. | Make sure the GPS antenna cable is in good condition, and connected securely to the terminal. |
| | The vehicle may be in an area where there is poor GPS coverage (*e.g.*, parkades, tunnels, deep valleys or areas with many tall buildings). |
| | There may be a problem with either the software, or with the GPS radio. Contact Customer Service for advanced troubleshooting and repair. |
| Terminal is not receiving data or transmitting data (BSWD and RAT radios). | Make sure the antenna cables are in good condition, and connected securely to the terminal. |
| | Check to see if there are problems on the network. |
| | You may be in an area of poor coverage. Drive to an area where you know the radio coverage is adequate. |
| | There may be a problem with either the software, or with an internal radio. Contact Customer Service for advanced troubleshooting and repair. |

## Service Information

Before you use the unit, it must be configured to operate in your facility's network and run your applications.

If you have a problem running your unit or using your equipment, contact your facility's Technical or Systems Support. If there is a problem with the equipment, they will contact the Symbol Support Center:

| | | | |
|---|---|---|---|
| United States | 1-800-653-5350 | Canada | 905-629-7226 |
| United Kingdom | 0800 328 2424 | Asia/Pacific | 337-6588 |
| Australia | 1-800-672-906 | Austria | 1-505-5794 |
| Denmark | 7020-1718 | Finland | 9 5407 580 |
| France | 01-40-96-52-21 | Germany | 6074-49020 |
| Italy | 2-484441 | Mexico | 5-520-1835 |
| Netherlands | 315-271700 | Norway | 66810600 |
| South Africa | 11-4405668 | Spain | 9-1-320-39-09 |
| Sweden | 84452900 | | |
| Latin America Sales Support | | 1-800-347-0178 Inside US<br>+1-561-483-1275 Outside US | |
| Europe/Mid-East Distributor Operations | | Contact local distributor or call +44 118 945 7360 | |

### Warranty

Symbol Technologies, Inc. ("Symbol") manufactures its hardware products in accordance with industry-standard practices. Symbol warrants that for a period of twelve (12) months from date of shipment, products will be free from defects in materials and workmanship.

This warranty is provided to the original owner only and is not transferable to any third party. It shall not apply to any product (i) which has been repaired or altered unless done or approved by Symbol, (ii) which has not been maintained in accordance with any operating or handling instructions supplied by Symbol, (iii) which has been subjected to unusual physical or electrical stress, misuse, abuse, power shortage, negligence or accident or (iv) which has been used other than in accordance with the product operating and handling instructions. Preventive maintenance is the responsibility of customer and is not covered under this warranty.

Wear items and accessories having a Symbol serial number, will carry a 90-day limited warranty. Non-serialized items will carry a 30-day limited warranty.

### *Warranty Coverage and Procedure*

During the warranty period, Symbol will repair or replace defective products returned to Symbol's manufacturing plant in the US. For warranty service in North America, call the Symbol Support Center at 1-800-653-5350. International customers should contact the local Symbol office or support center. If warranty service is required, Symbol will issue a Return Material Authorization Number. Products must be shipped in the original or comparable packaging, shipping and insurance charges prepaid. Symbol will ship the repaired or replacement product freight and insurance prepaid in North America. Shipments from the US or other locations will be made F.O.B. Symbol's manufacturing plant.

Symbol will use new or refurbished parts at its discretion and will own all parts removed from repaired products. Customer will pay for the replacement product in case it does not return the replaced product to Symbol within 3 days of receipt of the replacement product. The process for return and customer's charges will be in accordance with Symbol's Exchange Policy in effect at the time of the exchange.

Customer accepts full responsibility for its software and data including the appropriate backup thereof.

Repair or replacement of a product during warranty will not extend the original warranty term.

Symbol's Customer Service organization offers an array of service plans, such as on-site, depot, or phone support, that can be implemented to meet customer's special operational requirements and are available at a substantial discount during warranty period.

### *General*

Except for the warranties stated above, Symbol disclaims all warranties, express or implied, on products furnished hereunder, including without limitation implied warranties of merchantability and fitness for a particular purpose. The stated express warranties are in lieu of all obligations or liabilities on part of Symbol for damages, including without limitation, special, indirect, or consequential damages arising out of or in connection with the use or performance of the product.

Seller's liability for damages to buyer or others resulting from the use of any product, shall in no way exceed the purchase price of said product, except in instances of injury to persons or property.

Some states (or jurisdictions) do not allow the exclusion or limitation of incidental or consequential damages, so the proceeding exclusion or limitation may not apply to you.

# Regulatory Information

## Radio Frequency Interference Requirements

This device has been tested and found to comply with the limits for a Class B digital device pursuant to Part 15 of the Federal Communications Commissions Rules and Regulation. These limits are designed to provide reasonable protection against harmful interference when the equipment is operated in a commercial environment. This equipment generates, uses, and can radiate radio frequency energy and, if not installed and used in accordance with the instruction manual, may cause harmful interference to radio communications. Operation of this equipment in a residential area is likely to cause harmful interference in which case the user will be required to correct the interference at his own expense.

However, there is no guarantee that interference will not occur in a particular installation. If the equipment does cause harmful interference to radio or television reception, which can be determined by turning the equipment off and on, the user is encouraged to try to correct the interference by one or more of the following measures:

- Re-orient or relocate the receiving antenna.
- Increase the separation between the equipment and receiver.
- Connect the equipment into an outlet on a circuit different from that which the receiver is connected.
- Consult the dealer or an experienced radio/TV technician for help.

This device complies with FCC Part 15. Operation is subject to the following two conditions: (1) this device may not cause harmful interference and (2) this device must accept any interference received, including interference that may cause undesired operation.

## Radio Frequency Interference Requirements - Canada

This device complies with RSS 210 of Industry & Science Canada. Operation is subject to the following two conditions: (1) this device may not cause harmful interference and (2) this device must accept any interference received, including interference that may cause undesired operation.

This Class A digital apparatus complies with Industry Canada Standard ICES-003.

Cet appareil numérique de la classe A est conform à la norme NMB-003 d'Industrie Canada.

**72-43383-01**
**Revision A— September 2000**

Symbol Technologies, Inc. One Symbol Plaza Holtsville, NY 11742-1300