ThinkStation Front Fan Assembly

http://www.lenovo.com/support

PN: SP40M41943
Printed in China

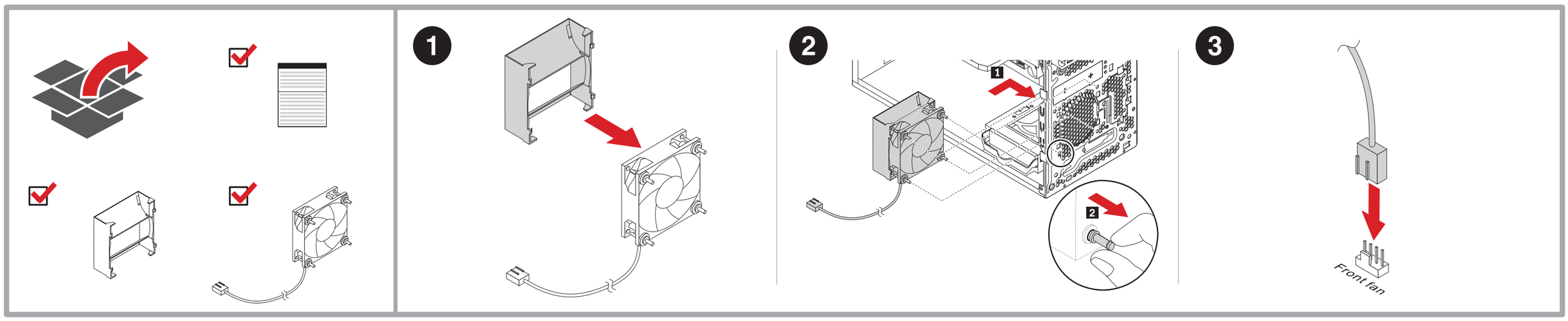

http://www.lenovo.com/safety

Service and Support

The following information describes the technical support that is available for your product, during the warranty period or throughout the life of your product. Refer to the Lenovo Limited Warranty for a full explanation of Lenovo warranty terms.

Online technical support

Online technical support is available during the lifetime of a product at: http://www.lenovo.com/support

Product replacement assistance or exchange of defective components also is available during the warranty period. A Lenovo technical support representative can help you determine the best alternative. In addition, if your Lenovo option is installed into a Lenovo computer, the option takes on the warranty of the computer in which it is installed. For many Lenovo computers, this can entitle the Lenovo option for warranty service up to three years.

Telephone technical support

Installation and configuration support through the Customer Support Center will be available until 90 days after the option has been withdrawn from marketing. After that time, the support is canceled, or made available for a fee, at Lenovo's discretion. Additional support is also available for a nominal fee.

Before contacting a Lenovo technical support representative, please have the following information available: option name and number, proof of purchase, computer manufacturer, model, serial number and manual, the exact wording of any error message, description of the problem, and the hardware and software configuration information for your system.

Your technical support representative might want to walk you through the problem while you are at your computer during the call.

Telephone numbers are subject to change without notice. The most up-to-date telephone list for Lenovo Support is always available at http://www.lenovo.com/support/phone. If the telephone number for your country or region is not listed, contact your Lenovo reseller or Lenovo marketing representative.

Lenovo Limited Warranty

L505-0010-02 08/2011

This Lenovo Limited Warranty consists of the following parts:

Part 1 - General Terms

Part 2 - Country-specific Terms

Part 3 - Warranty Service Information

The terms of **Part 2** replace or modify terms of **Part 1** as specified for a particular country.

Part 1 - General Terms

This Lenovo Limited Warranty applies only to Lenovo hardware products you purchased for your own use and not for resale.

This Lenovo Limited Warranty is available in other languages at www.lenovo.com/warranty.

What this Warranty Covers

Lenovo warrants that each Lenovo hardware product that you purchase is free from defects in materials and workmanship under normal use during the warranty period. The warranty period for the product starts on the original date of purchase as shown on your sales receipt or invoice or as may be otherwise specified by Lenovo. The warranty period and type of warranty service that apply to your product are as specified in "**Part 3 - Warranty Service Information**" below. This warranty only applies to products in the country or region of purchase.

THIS WARRANTY IS YOUR EXCLUSIVE WARRANTY AND REPLACES ALL OTHER WARRANTIES OR CONDITIONS, EXPRESS OR IMPLIED, INCLUDING, BUT NOT LIMITED TO, ANY IMPLIED WARRANTIES OR CONDITIONS OF MERCHANTABILITY OR FITNESS FOR A PARTICULAR PURPOSE. AS SOME STATES OR JURISDICTIONS DO NOT ALLOW THE EXCLUSION OF EXPRESS OR IMPLIED WARRANTIES, THE ABOVE EXCLUSION MAY NOT APPLY TO YOU. IN THAT EVENT, SUCH WARRANTIES APPLY ONLY TO THE EXTENT AND FOR SUCH DURATION AS REQUIRED BY LAW AND ARE LIMITED IN DURATION TO THE WARRANTY PERIOD. AS SOME STATES OR JURISDICTIONS DO NOT ALLOW LIMITATIONS ON THE DURATION OF AN IMPLIED WARRANTY, THE ABOVE LIMITATION ON DURATION MAY NOT APPLY TO YOU.

How to Obtain Warranty Service

If the product does not function as warranted during the warranty period, you may obtain warranty service by contacting Lenovo or a Lenovo approved Service Provider. A list of approved Service Providers and their telephone numbers is available at: www.lenovo.com/support/phone.

Warranty service may not be available in all locations and may differ from location to location. Charges may apply outside a Service Provider's normal service area. Contact a local Service Provider for information specific to your location.

Customer Responsibilities for Warranty Service

Before warranty service is provided, you must take the following steps:

- Follow the service request procedures specified by the Service Provider.
- Backup or secure all programs and data contained in the product.
- Provide the Service Provider with all system keys or passwords.
- Provide the Service Provider with sufficient, free, and safe access to your facilities to perform service.
- Remove all data, including confidential information, proprietary information and personal information, from the product or, if you are unable to remove any such information, modify the information to prevent its access by another party or so that it is not personal data under applicable law. The Service Provider shall not be responsible for the loss or disclosure of any data, including confidential information, proprietary information, or personal information, on a product returned or accessed for warranty service.
- Remove all features, parts, options, alterations, and attachments not covered by the warranty.
- Ensure that the product or part is free of any legal restrictions that prevent its replacement.
- If you are not the owner of a product or part, obtain authorization from the owner for the Service Provider to provide warranty service.

What Your Service Provider Will Do to Correct Problems

When you contact a Service Provider, you must follow the specified problem determination and resolution procedures.

The Service Provider will attempt to diagnose and resolve your problem by telephone, e-mail or remote assistance. The Service Provider may direct you to download and install designated software updates.

Some problems may be resolved with a replacement part that you install yourself called a "Customer Replaceable Unit" or "CRU." If so, the Service Provider will ship the CRU to you for you to install.

If your problem cannot be resolved over the telephone; through the application of software updates or the installation of a CRU, the Service Provider will arrange for service under the type of warranty service designated for the product under "**Part 3 - Warranty Service Information**" below.

If the Service Provider determines that it is unable to repair your product, the Service Provider will replace it with one that is at least functionally equivalent.

If the Service Provider determines that it is unable to either repair or replace your product, your sole remedy under this Limited Warranty is to return the product to your place of purchase or to Lenovo for a refund of your purchase price.

Replacement Products and Parts

When warranty service involves the replacement of a product or part, the replaced product or part becomes Lenovo's property and the replacement product or part becomes your property. Only unaltered Lenovo products and parts are eligible for replacement. The replacement product or part provided by Lenovo may not be new, but it will be in good working order and at least functionally equivalent to the original product or part. The replacement product or part shall be warranted for the balance of the period remaining on the original product.

Use of Personal Contact Information

If you obtain service under this warranty, you authorize Lenovo to store, use and process information about your warranty service and your contact information, including name, phone numbers, address, and e-mail address. Lenovo may use this information to perform service under this warranty. We may contact you to inquire about your satisfaction with our warranty service or to notify you about any product recalls or safety issues. In accomplishing these purposes, you authorize Lenovo to transfer your information to any country where we do business and to provide it to entities acting on our behalf. We may also disclose it where required by law. Lenovo's privacy policy is available at www.lenovo.com/.

What this Warranty Does not Cover

This warranty does not cover the following:

- Uninterrupted or error-free operation of a product.
- Loss of, or damage to, your data by a product.
- Any software programs, whether provided with the product or installed subsequently.
- Failure or damage resulting from misuse, abuse, accident, modification, unsuitable physical or operating environment, natural disasters, power surges, improper maintenance, or use not in accordance with product information materials.
- Damage caused by a non-authorized service provider.
- Failure of, or damage caused by, any third party products, including those that Lenovo may provide or integrate into the Lenovo product at your request.
- Any technical or other support, such as assistance with "how-to" questions and those regarding product set-up and installation.
- Products or parts with an altered identification label or from which the identification label has been removed.

Limitation of Liability

Lenovo is responsible for loss or damage to your product only while it is in the Service Provider's possession or in transit, if the Service Provider is responsible for the transportation.

Neither Lenovo nor the Service Provider is responsible for loss or disclosure of any data, including confidential information, proprietary information, or personal information, contained in a product.

UNDER NO CIRCUMSTANCES, AND NOTWITHSTANDING THE FAILURE OF ESSENTIAL PURPOSE OF ANY REMEDY SET FORTH HEREIN, SHALL LENOVO, ITS AFFILIATES, SUPPLIERS, RESELLERS, OR SERVICE PROVIDERS BE LIABLE FOR ANY OF THE FOLLOWING EVEN IF INFORMED OF THEIR POSSIBILITY AND REGARDLESS OF WHETHER THE CLAIM IS BASED IN CONTRACT, WARRANTY, NEGLIGENCE, STRICT LIABILITY OR OTHER THEORY OF LIABILITY: 1) THIRD PARTY CLAIMS AGAINST YOU FOR DAMAGES; 2) LOSS, DAMAGE OR DISCLOSURE OF YOUR DATA; 3) SPECIAL, INCIDENTAL, PUNITIVE, INDIRECT OR CONSEQUENTIAL DAMAGES, INCLUDING BUT NOT LIMITED TO LOST PROFITS, BUSINESS REVENUE, GOODWILL OR ANTICIPATED SAVINGS. IN NO CASE SHALL THE TOTAL LIABILITY OF LENOVO, ITS AFFILIATESS, SUPPLIERS, RESELLERS OR SERVICE PROVIDERS FOR DAMAGES FROM ANY CAUSE EXCEED THE AMOUNT OF ACTUAL DIRECT DAMAGES, NOT TO EXCEED THE AMOUNT PAID FOR THE PRODUCT.

THE FOREGOING LIMITATIONS DO NOT APPLY TO DAMAGES FOR BODILY INJURY (INCLUDING DEATH), DAMAGE TO REAL PROPERTY OR DAMAGE TO TANGIBLE PERSONAL PROPERTY FOR WHICH LENOVO IS LIABLE UNDER LAW.

AS SOME STATES OR JURISDICTIONS DO NOT ALLOW THE EXCLUSION OR LIMITATION OF INCIDENTAL OR CONSEQUENTIAL DAMAGES, THE ABOVE LIMITATION OR EXCLUSION MAY NOT APPLY TO YOU.

Your Other Rights

THIS WARRANTY GIVES YOU SPECIFIC LEGAL RIGHTS. YOU MAY HAVE OTHER RIGHTS ACCORDING TO THE APPLICABLE LAWS OF YOUR STATE OR JURISDICTION. YOU MAY ALSO HAVE OTHER RIGHTS UNDER A WRITTEN AGREEMENT WITH LENOVO. NOTHING IN THIS WARRANTY AFFECTS STATUTORY RIGHTS, INCLUDING RIGHTS OF CONSUMERS UNDER LAWS OR REGULATIONS GOVERNING THE SALE OF CONSUMER GOODS THAT CANNOT BE WAIVED OR LIMITED BY CONTRACT.

Part 2 - Country-specific Terms

Australia

"Lenovo" means Lenovo (Australia & New Zealand) Pty Limited ABN 70 112 394 411. Address: Level 10, North Tower, 1-5 Railway Street, Chatswood, NSW, 2067. Telephone: +61 2 8003 8200. Email: lensyd_au@lenovo.com

The following replaces the same section in Part 1:

What this Warranty Covers:

Lenovo warrants that each hardware product that you purchase is free from defects in materials and workmanship under normal use and conditions during the warranty period. If the product fails due to a covered defect during the warranty period, Lenovo will provide you a remedy under this Limited Warranty. The warranty period for the product starts on the original date of purchase specified on your sales receipt or invoice unless Lenovo informs you otherwise in writing. The warranty period and type of warranty service that apply to your product are set forth below in **Part 3 - Warranty Service Information**.

THE BENEFITS GIVEN BY THIS WARRANTY ARE IN ADDITION TO YOUR RIGHTS AND REMEDIES AT LAW, INCLUDING THOSE UNDER THE AUSTRALIAN CONSUMER LAW.

The following replaces the same section in Part 1:

Replacement Products and Parts:

When warranty service involves the replacement of a product or part, the replaced product or part becomes Lenovo's property and the replacement product or part becomes your property. Only unaltered Lenovo products and parts are eligible for replacement. The replacement product or part provided by Lenovo may not be new, but it will be in good working order and at least functionally equivalent to the original product or part. The replacement product or part shall be warranted for the balance of the period remaining on the original product. Products and parts presented for repair may be replaced by refurbished products or parts of the same type rather than being repaired. Refurbished parts may be used to repair the product; and repair of the product may result in loss of data, if the product is capable of retaining user-generated data.

The following is added to the same section in Part 1:

Use of Personal Contact Information:

Lenovo will not be able to perform our service under this warranty if you refuse to provide your information or do not wish us to transfer your information to our agent or contractor. You have the right to access your personal contact information and request correction of any errors in it pursuant to the Privacy Act 1988 by contacting Lenovo.

The following replaces the same section in Part 1:

Limitation of Liability:

Lenovo is responsible for loss or damage to your product only while it is in the Service Provider's possession or in transit, if the Service Provider is responsible for the transportation.

Neither Lenovo nor the Service Provider is responsible for loss or disclosure of any data, including confidential information, proprietary information, or personal information, contained in a product.

TO THE EXTENT PERMITTED BY LAW, UNDER NO CIRCUMSTANCES AND NOTWITHSTANDING THE FAILURE OF ESSENTIAL PURPOSE OF ANY REMEDY SET FORTH HEREIN, SHALL LENOVO, ITS AFFILIATES, SUPPLIERS, RESELLERS, OR SERVICE PROVIDERS BE LIABLE FOR ANY OF THE FOLLOWING EVEN IF INFORMED OF THEIR POSSIBILITY AND REGARDLESS OF WHETHER THE CLAIM IS BASED IN CONTRACT, WARRANTY, NEGLIGENCE, STRICT LIABILITY OR OTHER THEORY OF LIABILITY: 1) THIRD PARTY CLAIMS AGAINST YOU FOR DAMAGES; 2) LOSS, DAMAGE OR DISCLOSURE OF YOUR DATA; 3) SPECIAL, INCIDENTAL, PUNITIVE, INDIRECT OR CONSEQUENTIAL DAMAGES, INCLUDING BUT NOT LIMITED TO LOST PROFITS, BUSINESS REVENUE, GOODWILL OR ANTICIPATED SAVINGS. IN NO CASE SHALL THE TOTAL LIABILITY OF LENOVO, ITS AFFILIATESS, SUPPLIERS, RESELLERS OR SERVICE PROVIDERS FOR DAMAGES FROM ANY CAUSE EXCEED THE AMOUNT OF ACTUAL DIRECT DAMAGES, NOT TO EXCEED THE AMOUNT PAID FOR THE PRODUCT.

THE FOREGOING LIMITATIONS DO NOT APPLY TO DAMAGES FOR BODILY INJURY (INCLUDING DEATH), DAMAGE TO REAL PROPERTY OR DAMAGE TO TANGIBLE PERSONAL PROPERTY FOR WHICH LENOVO IS LIABLE UNDER LAW.

NOTHING IN THIS WARRANTY AFFECTS STATUTORY RIGHTS OR RIGHTS AT LAW, INCLUDING RIGHTS THAT CANNOT BE WAIVED OR LIMITED BY CONTRACT.

For example, our products come with guarantees that cannot be excluded under the Australian Consumer Law. You are entitled to a replacement or refund for a major failure and compensation for any other reasonably foreseeable loss or damage. You are also entitled to have the products repaired or replaced if the products fail to be of acceptable quality and the failure does not amount to a major failure.

New Zealand

The following is added to the same section in Part 1:

Use of Personal Information:

Lenovo will not be able to perform our service under this warranty if you refuse to provide your information or do not wish us to transfer your information to our agent or contractor. You have the right to access your personal information and request correction of any errors in it pursuant to the Privacy Act 1993 by contacting Lenovo (Australia & New Zealand) Pty Limited ABN 70 112 394 411. Address: Level 10, North Tower, 1-5 Railway Street, Chatswood, NSW, 2067. Telephone: 61 2 8003 8200. Email: lensyd_au@lenovo.com

Bangladesh, Cambodia, India, Indonesia, Nepal, Philippines, Vietnam and Sri Lanka

The following is added to Part 1:

Dispute Resolution

Disputes arising out of or in connection with this warranty shall be finally settled by arbitration held in Singapore. This warranty shall be governed, construed and enforced in accordance with the laws of Singapore, without regard to conflict of laws. If you acquired the product in **India**, disputes arising out of or in connection with this warranty shall be finally settled by arbitration held in Bangalore, India. Arbitration in Singapore shall be held in accordance with the Arbitration Rules of Singapore International Arbitration Center ("SIAC Rules") then in effect. Arbitration in India shall be held in accordance with the laws of India then in effect. The arbitration award shall be final and binding on the parties without appeal. Any award shall be in writing and set forth the findings of fact and the conclusions of law. All arbitration proceedings, including all documents presented in such proceedings shall be conducted in the English language. The English language version of this warranty prevails over any other language version in such proceedings.

European Economic Area (EEA)

The following is added to Part 1:

Customers in the EEA may contact Lenovo at the following address: EMEA Service Organisation, Lenovo (International) B.V., Floor 2, Einsteinova 21, 851 01, Bratislava, Slovakia. Service under this warranty for Lenovo hardware products purchased in EEA countries may be obtained in any EEA country in which the product has been announced and made available by Lenovo.

Russia

The following is added to Part 1:

Product Service Life

The product service life is four (4) years from the original date of purchase.

Part 3 - Warranty Service Information

Product Type	Country or Region of Purchase	Warranty Period	Type of Warranty Service
ThinkStation® Front Fan Assembly	Worldwide	1 year	1, 4

If required, the Service Provider will provide repair or exchange service depending on the type of warranty service specified for your product and the available service.

Scheduling of service will depend upon the time of your call, parts availability, and other factors.

Types of Warranty Service

1. Customer Replaceable Unit ("CRU") Service

Under CRU Service, the Service Provider will ship CRUs to you at its cost for installation by you. CRU information and replacement instructions are shipped with your product and are available from Lenovo at any time upon request. CRUs that are easily installed by you are called "Self-service CRUs". "Optional-service CRUs" are CRUs that may require some technical skill and tools. Installation of Self-service CRUs is your responsibility. You may request that a Service Provider install Optional-service CRUs under one of the other types of warranty service designated for your product. An optional service offering may be available for purchase from a Service Provider or Lenovo under which Self-service CRUs would be installed for you. You may find a list of CRUs and their designation in the publication that was shipped with your product or at www.lenovo.com/CRUs. The requirement to return a defective CRU, if any, will be specified in the instructions shipped with a replacement CRU. When return is required: 1) return instructions, a prepaid return shipping label, and a container will be included with the replacement CRU; and 2) you may be charged for the replacement CRU if the Service Provider does not receive the defective CRU from you within thirty (30) days of your receipt of the replacement CRU.

2. On-site Service

Under On-Site Service, a Service Provider will either repair or exchange the product at your location. You must provide a suitable working area to allow disassembly and reassembly of the product. Some repairs may need to be completed at a service center. If so, the Service Provider will send the product to the service center at its expense.

3. Courier or Depot Service

Under Courier or Depot Service, your product will be repaired or exchanged at a designated service center, with shipping at the expense of the Service Provider. You are responsible for disconnecting the product and packing it in a shipping container provided to you to return your product to a designated service center. A courier will pick up your product and deliver it to the designated service center. The service center will return the product to you at its expense.

4. Customer Carry-In Service

Under Customer Carry-In Service, your product will be repaired or exchanged after you deliver it to a designated service center at your risk and expense. After the product has been repaired or exchanged, it will be made available to you for collection. If you fail to collect the product, the Service Provider may dispose of the product as it sees fit, with no liability to you.

5. Mail-In Service

Under Mail-In Service, your product will be repaired or exchanged at a designated service center after you deliver it at your risk and expense. After the product has been repaired or exchanged, it will be returned to you at Lenovo's risk and expense, unless the Service Provider specifies otherwise.

6. Customer Two-Way Mail-In Service

Under Customer Two-Way Mail-In Service, your product will be repaired or exchanged after you deliver it to a designated service center at your risk and expense. After the product has been repaired or exchanged, it will be made available to you for return shipping at your risk and expense. If you fail to arrange return shipment, the Service Provider may dispose of the product as it sees fit, with no liability to you.

7. Product Exchange Service

Under Product Exchange Service, Lenovo will ship a replacement product to your location. You are responsible for its installation and verification of its operation. The replacement product becomes your property in exchange for the failed product, which becomes the property of Lenovo. You must pack the failed product in the shipping carton in which you received the replacement product and return it to Lenovo. Transportation charges, both ways, shall be at Lenovo's expense. If you fail to use the carton in which the replacement product was received, you may be responsible for any damage to the failed product occurring during shipment. You may be charged for the replacement product if Lenovo does not receive the failed product within thirty (30) days of your receipt of the replacement product.

Les garanties statutaires de conformité et des vices cachés

Cette information complète les informations contenues dans le « Chapitre 2 – Dispositions nationales particulières » de la Garantie Limitée Lenovo (L505-0010-02).

France

Autres Droits

LA PRESENTE GARANTIE VOUS CONFERE DES DROITS SPECIFIQUES. IL EST POSSIBLE QUE VOUS DETENIEZ D'AUTRES DROITS, DONT LA NATURE VARIE SELON LA LEGISLATION QUI VOUS EST APPLICABLE. VOUS POUVEZ EGALEMENT DISPOSER D'AUTRES DROITS CONFORMEMENT A UN ACCORD ECRIT AVEC LENOVO. AUCUN ELEMENT DE LA PRESENTE GARANTIE N'AFFECTE LES DROITS LEGAUX, Y COMPRIS LES DROITS DES CONSOMMATEURS DANS LE CADRE DES LOIS ET REGLEMENTATIONS QUI REGISSENT LA VENTE DE BIENS DE CONSOMMATION ET QUI NE PEUVENT ETRE NI SUPPRIMEES NI LIMITEES PAR CONTRAT. Les garanties statutaires de conformité et des vices cachés se appliquent aux consommateurs. Le consommateur peut, indépendamment de la garantie commerciale éventuellement consentie, mettre en oeuvre la garantie légale de conformité et la garantie contre les défauts cachés.

Suplemento de Garantía para México

Este Suplemento de Garantía se considera parte integrante de la Garantía Limitada de Lenovo y será efectivo única y exclusivamente para los productos distribuidos y comercializados dentro del Territorio de los Estados Unidos Mexicanos. En caso de conflicto, se aplicarán los términos de este Suplemento.

El comercializador responsable del producto es Lenovo México S de R L de CV y para efectos de esta garantía en la República Mexicana su domicilio es Paseo de Tamarindos No.400-A Piso 27 Arcos Torre Poniente, Bosques de Las Lomas, Delegación Miguel Hidalgo, C.P. 05120 México, D.F. En el caso de que se precise una reparación cubierta por la garantía o precise de partes, componentes, consumibles o accesorios diríjase a este domicilio.

Si no existiese ningún Centro de servicio autorizado en su ciudad, población o en un radio de 70 kilómetros de su ciudad o población, la garantía incluirá cualquier gasto de entrega razonable relacionado con el transporte del producto a su Centro de servicio autorizado más cercano. Por favor, llame al Centro de servicio autorizado más cercano para obtener las aprobaciones necesarias o la información relacionada con el envío del producto y la dirección de envío.

Esta garantía ampara todas las piezas de hardware del producto e incluye mano de obra.

El procedimiento para hacer efectiva la garantía consiste en la presentación del producto, acompañado de la póliza correspondiente, debidamente sellada por el establecimiento que lo vendió, o la factura, o recibo o comprobante, en el que consten los datos específicos del producto objeto de la compraventa.

Lenovo sólo pueden eximirse de hacer efectiva la garantía en los siguientes casos: a) Cuando el producto se hubiese utilizado en condiciones distintas a las normales. b) Cuando el producto no hubiese sido operado de acuerdo con el instructivo de uso que se le acompaña. c) Cuando el producto hubiese sido alterado o reparado por personas no autorizadas por el fabricante nacional, importador o comercializador responsable respectivo.

Todos los programas de software precargados en el equipo sólo tendrán una garantía de noventa (90) días por defectos de instalación desde la fecha de compra. Lenovo no es responsable de la información incluida en dichos programas de software y /o cualquier programa de software adicional instalado por Usted o instalado después de la compra del producto.

La garantía cubre la atención, revisión y corrección de errores, defectos o inconsistencias que impidan el desempeño normal de un equipo de cómputo en cuanto a su hardware y software. Los servicios no cubiertos por la garantía se cargarán al usuario final, previa obtención de una autorización.

Esta garantía tiene una duración de un año a partir del momento de la compra e incluye la mano de obra, por lo que en caso de aplicarse la garantía, esta no causara ningún gasto o costo para el cliente.

Centros de Servicios autorizados para hacer efectiva la garantía:

- Lenovo México con domicilio en Paseo de Tamarindos No.400-A Piso 27 Arcos, Torre Poniente, Bosques de Las Lomas, Delegación Miguel Hidalgo, C.P. 05120 México, D.F. Teléfono 01800- 083-4916, http://support.lenovo.com/es_MX/product-service/service-provider/default.page
- Lenovo Monterrey con domicilio en Boulevard Escobedo No.316, Apodaca Technology Park, Apodaca, C.P. 66601, Nuevo León, México. Teléfono 01800- 083-4916, http://support.lenovo.com/es_MX/product-service/service-provider/default.page

Importado por:

Lenovo México S. de R.L. de C.V.

Av. Santa Fe 505, Piso 15

Col. Cruz Manca

Cuajimalpa, D.F., México

C.P. 05349

Tel. (55) 5000 8500

Lenovo Limited Warranty - Customer Notice

Lenovo Limited Warranty - Customer Notice

Read the Lenovo Limited Warranty (LLW) at http://www.lenovo.com/warranty/llw_02. If you cannot view the LLW, contact your local Lenovo office or reseller to obtain a printed version of the LLW.

Warranty information applicable to your machine:

1. Warranty Period: 1 year
2. Type of Warranty Service: Customer Replaceable Unit (CRU) and Customer Carry-In
3. Lenovo Limited Warranty Version: L505-0010-02 08/2011

For warranty service, consult the telephone list at http://www.lenovo.com/support/phone. Phone numbers are subject to change without notice.

Garantia Limitada da Lenovo - Aviso ao Cliente

Leia Garantia Limitada Lenovo (LLW) em: http://www.lenovo.com/warranty/llw_02. Caso não seja possível exibir a LLW, entre em contato com o escritório ou revendedor Lenovo local para obter uma versão impressa da LLW.

Informações de garantia aplicáveis à sua máquina:

1. Período de Garantia: 1 ano
2. Tipo de Serviço de Garantia: Unidade Substituível pelo Cliente (CRU) e Serviço de Transporte pelo Cliente
3. Versão da Garantia Limitada Lenovo: L505-0010-02 08/2011

Para obter informações sobre o serviço de garantia, consulte a lista de telefones em http://www.lenovo.com/support/phone. Os números de telefone estão sujeitos a alterações sem aviso prévio.

Lenovo Ограничена гаранция – Забележка за клиента

Прочетете Ограничената гаранция на Lenovo (LLW) на адрес http://www.lenovo.com/warranty/llw_02. Ако нямате достъп до LLW, свържете се с местния офис или риселър на Lenovo, за да получите печатна версия на LLW.

Гаранционна информация, приложима за вашия компютър:

1. Гаранционен срок: 1 година
2. Тип гаранционно обслужване: Подменяеми от клиента части (CRU) и обслужване с донасяне от клиента
3. Версия на Ограничената гаранция на Lenovo: L505-0010-02 08/2011

За възможностите за гаранционно обслужване разгледайте списъка с телефони на адрес http://www.lenovo.com/support/phone. Телефонните номера подлежат на промяна без предизвестие.

Lenovo ograničeno jamstvo – Napomena za korisnike

Ograničeno jamstvo tvrtke Lenovo pronaći ćete i na adresi http://www.lenovo.com/warranty/llw_02.
Ako ne možete vidjeti ograničeno jamstvo tvrtke Lenovo, obratite se lokalnoj podružnici ili prodavaču proizvoda tvrtke Lenovo da biste dobili tiskanu verziju tog jamstva.

Informacije o jamstvu koje se odnose na vaš uređaj:

1. Jamstveno razdoblje: 1 godina
2. Vrsta jamstvenog servisa: korisnički zamjenjive jedinice (CRU) i servis s korisničkom dostavom
3. Verzija ograničenog jamstva tvrtke Lenovo: L505-0010-02 08/2011

Informacije o jamstvenom servisu potražite na popisu telefonskih brojeva na adresi http://www.lenovo.com/support/phone. Telefonski brojevi podložni su promjeni bez prethodne obavijesti.

Omezená záruka Lenovo – upozornění pro zákazníky

Přečtěte si prosím Omezenou záruku Lenovo (Lenovo Limited Warranty, LLW) na webové stránce http://www.lenovo.com/warranty/llw_02. Pokud si text LLW nemůžete prohlédnout, vyžádejte si tištěnou verzi od místního zastoupení Lenovo nebo od prodejce.

Informace o záruce platné pro tento počítač:

1. Záruční doba: 1 rok
2. Typ záručního servisu: servis typu CRU (Customer Replaceable Unit, součásti vyměnitelné zákazníkem) a servis typu Customer Carry-In
3. Omezená záruka Lenovo verze: L505-0010-02 08/2011

Informace o záručním servisu získáte na telefonních číslech uvedených na webové stránce http://www.lenovo.com/support/phone. Telefonní čísla se mohou měnit bez předchozího upozornění.

Bemærkning til kunden vedrørende Lenovo Begrænset garanti

Læs Lenovo Begrænset garanti (LLW) på http://www.lenovo.com/warranty/llw_02. Hvis du ikke læse LLW, kan du kontakte det lokale Lenovo-kontor eller den lokale Lenovo-forhandler for at få en trykt version af LLW.

Garantioplysninger for maskinen:

1. Garantiperiode: 1 år
2. Den type service, der er omfattet af garantien: CRU-service (Customer Replaceable Unit) og Kundeindleveringsservice
3. Version af Lenovo Begrænset garanti: L505-0010-02 08/2011

Se telefonlisten på adressen http://www.lenovo.com/support/phone vedrørende garantiservice. Disse telefonnumre kan ændres uden forudgående varsel.

Lenovon rajoitettu takuu - ilmoitus asiakkaalle

Lue Lenovon rajoitettu takuu (Lenovo Limited Warranty) osoitteessa http://www.lenovo.com/warranty/llw_02. Jos et näe Lenovon rajoitettua takuuta (LLW), ota yhteyttä paikalliseen Lenovo-toimistoon tai -jälleenmyyjään ja pyydä painettu versio LLW:stä.

Konetta koskevat takuutiedot:

1. Takuuaika: 1 vuosi
2. Takuuhuollon laji: Asiakkaan vaihdettavissa olevia osia (CRU) koskeva palvelu ja asiakkaan toteuttama kuljetus
3. Lenovon rajoitetun takuun ehtojen versio: L505-0010-02 08/2011

Saat takuuhuoltopalveluja soittamalla sopivaan Web-sivustossa http://www.lenovo.com/support/phone olevan luettelon puhelinnumeroon. Puhelinnumeroita saatetaan muuttaa ennalta ilmoittamatta.

Garantie Lenovo - Notification client

Consultez la Garantie Lenovo (LLW) à l'adresse suivante : http://www.lenovo.com/warranty/llw_02. Si vous n'arrivez pas à afficher la Garantie, prenez contact avec votre distributeur Lenovo ou avec le bureau Lenovo local afin d'en obtenir une version imprimée.

Informations relatives à la garantie applicable à votre machine :

1. Etendue de la garantie : 1 an
2. Types de services prévus par la garantie : Service d'unité remplaçable par l'utilisateur (CRU) et Service de livraison ou d'expédition par le client ou service postal
3. Numéro de version de la garantie : L505-0010-02 08/2011

Pour obtenir les services prévus par la garantie, consultez la liste de numéros

Reduce | Reuse | Recycle

First Edition (September 2016)

© Copyright Lenovo 2016.

LIMITED AND RESTRICTED RIGHTS NOTICE: If data or software is delivered pursuant to a General Services Administration "GSA" contract, use, reproduction, or disclosure is subject to restrictions set forth in Contract No. GS-35F-05925.

de téléphone à l'adresse http://www.lenovo.com/support/phone. Les numéros de téléphone sont susceptibles d'être modifiés sans préavis.

Περιορισμένη Εγγύηση της Lenovo - Ειδοποίηση προς τους Πελάτες

Διαβάστε την Περιορισμένη Εγγύηση της Lenovo (LLW) στον δικτυακό τόπο http://www.lenovo.com/warranty/llw_02. Εάν δεν μπορείτε να προβάλετε την Περιορισμένη Εγγύηση της Lenovo (LLW), επικοινωνήστε με τα τοπικά γραφεία ή τον μεταπωλητή της Lenovo για να λάβετε μια έντυπη έκδοση της Περιορισμένης Εγγύησης της Lenovo (LLW).

Πληροφορίες σχετικά με την Εγγύηση που ισχύει για το Μηχάνημά σας:

1. Περίοδος εγγύησης: 1 έτος
2. Είδος υπηρεσιών εγγύησης: Μονάδες αντικαθιστώμενες από τον πελάτη (Customer Replaceable Unit ή CRU) και Μεταφορά από τον πελάτη (Customer Carry-In)
3. Έκδοση Περιορισμένης Εγγύησης της Lenovo: L505-0010-02 08/2011

Για υπηρεσίες εγγύησης, συμβουλευτείτε τον τηλεφωνικό κατάλογο στον δικτυακό τόπο http://www.lenovo.com/support/phone. Οι αριθμοί τηλεφώνου υπόκεινται σε αλλαγή χωρίς ειδοποίηση.

Lenovo Begrenzte Herstellergarantie - Hinweis für Kunden

Lesen Sie die begrenzte Herstellergarantie von Lenovo (LLW) unter http://www.lenovo.com/warranty/llw_02. Wenn Sie die begrenzte Herstellergarantie nicht anzeigen können, wenden Sie sich an Lenovo oder Ihren Lenovo Reseller vor Ort, um eine gedruckte Version der begrenzten Herstellergarantie zu erhalten.

Für Ihre Maschine gelten die folgenden Garantieinformationen:

1. Garantiezeitraum: 1 Jahr
2. Art des Garantieservice: CRU-Service (Customer Replaceable Unit, durch den Kunden austauschbare Funktionseinheit) und Anlieferung durch den Kunden
3. Lenovo Begrenzte Herstellergarantie: L505-0010-02 08/2011

Um Garantieservice in Anspruch zu nehmen, rufen Sie die entsprechende Telefonnummer aus der Liste unter der folgenden Adresse an: http://www.lenovo.com/support/phone. Telefonnummern können jederzeit ohne Vorankündigung geändert werden.

Lenovo Korlátozott Jótállás – Vásárlói közlemény

Olvassa el a Lenovo Korlátozott Jótállás (LLW) részleteit a http://www.lenovo.com/warranty/llw_02 címen. Ha nem tudja megtekinteni a Lenovo Korlátozott Jótállást, akkor lépjen kapcsolatba a Lenovo helyi képviseletével vagy viszonteladójával, és kérje a Lenovo Korlátozott Jótállás nyomtatott példányát.

A számítógépére vonatkozó jótállási információk:

1. Jótállási időszak: 1 év
2. Jótállási szolgáltatás típusa: Vásárló által cserélhető egység (CRU) és Beszállításos szolgáltatás
3. Lenovo Korlátozott Jótállás verziója: L505-0010-02 08/2011

A jótállási szolgáltatás elérhetőségével kapcsolatban tekintse meg a telefonszámok listáját a http://www.lenovo.com/support/phone címen. A telefonszámok bejelentés nélkül megváltozhatnak.

Garanzia limitata Lenovo (LLW) - Avviso per il cliente

Leggere la dichiarazione di Garanzia limitata Lenovo (LLW, Lenovo Limited Warranty) all'indirizzo http://www.lenovo.com/warranty/llw_02. Se non è possibile visualizzare la dichiarazione LLW, contattare l'ufficio locale Lenovo o il rivenditore per ottenerne una versione stampata.

Informazioni sulla garanzia applicabili alla propria macchina:

1. Periodo di garanzia: 1 anno
2. Tipo di servizio di garanzia: Customer Replaceable Unit (CRU) e Customer Carry-In
3. Versione di garanzia limitata Lenovo: L505-0010-02 08/2011

Per il servizio di garanzia, consultare l'elenco dei numeri telefonici all'indirizzo http://www.lenovo.com/support/phone. I numeri di telefono sono soggetti a modifiche senza preavviso.

Lenovo Beperkte Garantie - Kennisgeving aan klant

Lees de Lenovo Beperkte Garantie (LLW) op http://www.lenovo.com/warranty/llw_02. Als u de LLW niet kunt weergeven, neem dan contact op met uw plaatselijke Lenovo-kantoor of -dealer om een gedrukte versie van de LLW te verkrijgen.

Garantie-informatie die van toepassing is op uw machine:

1. Garantieperiode: 1 jaar
2. Type garantieservice: Customer Replaceable Unit (CRU) en Customer Carry-In
3. Versie Lenovo Beperkte Garantie: L505-0010-02 08/2011

Raadpleeg voor garantieservice de telefoonlijst op http://www.lenovo.com/support/phone. Telefoonnummers kunnen zonder voorafgaande kennisgeving worden gewijzigd.

Lenovos garantibetingelser - Merknad til kunden

Les Lenovos garantibetingelser (LLW) på http://www.lenovo.com/warranty/llw_02. Hvis du ikke kan vise garantibetingelsene, må du kontakte ditt lokale Lenovo-kontor eller forhandleren for å få en trykt versjon.

Garantiinformasjon som gjelder din maskin:

1. Garantiperiode: 1 år
2. Type garantiservice: CRU (Customer Replaceable Unit) og innlevering av kunden
3. Lenovos garantibetingelser versjon: L505-0010-02 08/2011

Hvis du har spørsmål om garantiservice, se telefonlisten på http://www.lenovo.com/support/phone. Telefonnumrene kan bli endret uten forvarsel.

Ograniczona gwarancja Lenovo - informacja dla Klienta

Prosimy o przeczytanie ograniczonej gwarancji Lenovo (Lenovo Limited Warranty – LLW) pod adresem: http://www.lenovo.com/warranty/llw_02. Jeśli nie można wyświetlić LLW, należy skontaktować się z miejscowym biurem Lenovo lub z reselerem w celu uzyskania wersji drukowanej.

Informacje gwarancyjne mające zastosowanie do Maszyny Klienta:

1. Okres gwarancyjny: 1 rok.
2. Typ serwisu gwarancyjnego: Serwis polegający na dostarczeniu Części Wymienianych przez Klienta (Customer Replaceable Unit – CRU) oraz serwis z transportem przez Klienta.
3. Wersja ograniczonej gwarancji Lenovo: L505-0010-02 08/2011.

Lista telefonów do osób odpowiedzialnych za serwis gwarancyjny znajduje się w serwisie: http://www.lenovo.com/support/phone. Numery telefonów mogą ulec zmianie bez powiadomienia.

Garantia Limitada da Lenovo - Aviso ao Cliente

Leia a Garantia Limitada da Lenovo (LLW, Lenovo Limited Warranty) disponível em http://www.lenovo.com/warranty/llw_02. Se não conseguir visualizar a LLW, contacte o seu representante ou revendedor local da Lenovo para obter uma versão impressa da LLW.

Informações de garantia aplicáveis à sua máquina:

1. Período de Garantia: 1 ano
2. Tipo de Serviço de Garantia: Serviço de Unidades Substituíveis pelo Cliente (CRU) e Serviço de Entrega
3. Garantia Limitada Lenovo Versão: L505-0010-02 08/2011

Para contactar o serviço de garantia, consulte a lista telefónica em http://www.lenovo.com/support/phone. Os números de telefone indicados estão sujeitos a alteração sem aviso prévio.

Lenovo 有限保证 — 客户声明

请阅读 http://www.lenovo.com/warranty/llw_02 上的“Lenovo 有限保证声明”（LLW）。如果无法查看 LLW，请联系当地的 Lenovo 办事处或经销商，索取 LLW 的印刷版本。

针对您机器的保修信息：

1. 保修期：1 年
2. 保修服务类型： 客户送修服务
3. Lenovo 有限保证声明版本：L505-0010-02 08/2011

有关保修服务咨询电话的信息，请查看以下地址：http://www.lenovo.com/support/phone。电话号码如有更改，恕不另行通知。

Lenovo 보증 제한 - 고객 주의사항

http://www.lenovo.com/warranty/llw_02에서 LLW(Lenovo 제한 보증)를 읽으십시오. LLW를 확인할 수 없는 경우 현지 Lenovo 지점 또는 대리점에 문의하여 LLW의 인쇄 버전을 얻으십시오.

귀하의 기계에 적용되는 보증 정보:

1. 보증 기간: 1년
2. 보증 서비스 유형: 고객 교체 가능 유닛(CRU) 및 고객 직접 운송
3. Lenovo 제한 보증 설명서 버전: L505-0010-02 08/2011

보증 서비스는 http://www.lenovo.com/support/phone의 전화 번호 목록을 참고하십시오. 전화번호는 별도의 공지 없이 변경될 수 있습니다.

ضمان Lenovo المحدود - ملحوظة للعميل

اقرأ ضمان Lenovo المحدود (LLW) في الموقع http://www.lenovo.com/warranty/llw_02. إذا لم تتمكن من عرض ضمان Lenovo المحدود، فاتصل بمكتب أو بائع منتجات Lenovo المحلي للحصول على نسخة مطبوعة من الضمان.

معلومات الضمان التي تنطبق على الجهاز الخاص بك:

١. فترة الضمان: عام واحد

٢. نوع خدمة الضمان: الوحدة التي يمكن استبدالها بواسطة العميل (CRU) وخدمة العملاء في مركز الخدمة

٣. نسخة ضمان Lenovo المحدود: L505-0010-02 08/2011

للحصول على خدمة الضمان، راجع قائمة الهواتف على http://www.lenovo.com/support/phone. أرقام الهواتف عرضة للتغيير دون إشعار.

Lenovo 保証の内容と制限 – お客様へのお知らせ

http://www.lenovo.com/warranty/llw_02 に掲載されている Lenovo 保証規定 (LLW) をお読みください。LLW を参照できないときは、最寄りの Lenovo オフィスまたは販売店に連絡して印刷版の LLW を入手してください。

ご使用のマシンに適用される保証情報:

1. 保証期間: 1 年
2. 保証サービスの種類: お客様での取替え可能部品 (CRU) および持ち込み
3. Lenovo 保証規定: L505-0010-02 08/2011 版

保証サービスについては、http:// www.lenovo.com/support/phone に掲載されている電話番号リストをご覧ください。電話番号は、予告なしに変更される場合があります。

Lenovo 有限保證 - 客戶注意事項

請閱讀 Lenovo 有限保證 (LLW)，網址為 http://www.lenovo.com/warranty/llw_02。如果無法檢視 LLW，請聯絡您當地的 Lenovo 辦公室或轉銷商，以取得 LLW 的印製版本。

適用於您的機器的保固資訊：

1.保固期限：1 年

2.保固服務類型：客戶可自行更換組件 (CRU) 及客戶運送。

3.Lenovo 有限保證版本：L505-0010-02 08/2011

您可以從 http://www.lenovo.com/support/phone 網站取得保固維修電話清單。電話號碼若有變更恕不另行通知。

การรับประกันแบบจำกัดของ Lenovo - ประกาศแจ้งลูกค้า

อ่านการรับประกันแบบจำกัดของ Lenovo (LLW) ที่ http://www.lenovo.com/warranty/llw_02 หากคุณไม่สามารถดู LLW จากทั้งเว็บไซต์และจากคอมพิวเตอร์ของคุณ โปรดติดต่อสำนักงาน Lenovo ท้องถิ่นหรือตัวแทนจำหน่าย เพื่อรับ LLW ฉบับตีพิมพ์

ข้อมูลการรับประกันสำหรับประเภทเครื่องของคุณ:

1. ระยะเวลาการรับประกัน: 1 ปี
2. ประเภทของบริการรับประกัน: ข้อมูลชิ้นส่วนทดแทนสำหรับลูกค้า (CRU) และบริการสำหรับลูกค้าที่นำเข้ามาเอง
3. เวอร์ชันการรับประกันแบบจำกัดของ Lenovo: L505-0010-02 08/2011

สำหรับบริการการรับประกัน สามารถดูหมายเลขโทรศัพท์ได้ที่ http://www.lenovo.com/support/phone หมายเลขโทรศัพท์สามารถเปลี่ยนแปลงได้โดยไม่ต้องแจ้งให้ทราบ

Observaţie pentru client - Garanţia limitată Lenovo

Vă rugăm să citiţi Garanţia limitată Lenovo (GLL) la http://www.lenovo.com/warranty/llw_02. Dacă nu puteţi vizualiza GLL, contactaţi reprezentanţa locală Lenovo sau reseller-ul pentru a obţine gratuit o versiune imprimată a GLL.

Informaţii referitoare la garanţie aplicabile unităţii dumneavoastră:

1. Perioada de garanţie: 1 an
2. Tip de serviciu garanţie: Customer Replaceable Unit (CRU) şi Customer Carry-In
3. Versiunea Garanţie limitată Lenovo: L505-0010-02 08/2011

Pentru service-ul în garanţie, consultaţi lista de telefoane la http://www.lenovo.com/support/phone. Numerele de telefon pot fi modificate fără preaviz.

Ограниченная гарантия Lenovo – Замечания для заказчиков

Ознакомьтесь с Ограниченной гарантией Lenovo (Lenovo Limited Warranty – LLW) на Web-странице http://www.lenovo.com/warranty/llw_02. Если вы не можете просмотреть LLW, то распечатанную версию LLW можно получить в местном представительстве Lenovo или у вашего дилера.

Информация о гарантии для вашего компьютера:

1. Гарантийный срок: 1 год
2. Тип гарантийного обслуживания: обслуживание при отказе узлов, подлежащих замене силами заказчика (CRU), и обслуживание при доставке силами заказчика
3. Версия Ограниченной гарантии Lenovo L505-0010-02 08/2011

За гарантийным обслуживанием обращайтесь по телефонам, приведенным на Web-странице http://www.lenovo.com/support/phone. Номера телефонов могут быть изменены без уведомления.

Lenovo ograničena garancija – obaveštenje za kupce

Pročitajte Lenovo ograničenu garanciju (LLW) na adresi http://www.lenovo.com/warranty/llw_02. Ukoliko niste u mogućnosti da pogledate Lenovo ograničenu garanciju, obratite se lokalnom predstavništvu kompanije Lenovo ili distributeru da biste dobili štampanu verziju Lenovo ograničene garancije.

Informacije o garanciji koje se odnose na vašu mašinu:

1. Garantni period: 1 godina
2. Vrsta usluge garancije: korisnički zamenljiva jedinica (CRU) i usluga servisiranja ličnom dostavom
3. Verzija Lenovo ograničene garancije: L505-0010-02 08/2011

Za uslugu garancije, pogledajte spisak telefonskih brojeva na veb lokaciji: http://www.lenovo.com/support/phone. Telefonski brojevi se mogu menjati bez prethodnog obaveštenja.

Obmedzená záruka spoločnosti Lenovo – Vyhlásenie pre zákazníkov

Prečítajte si obmedzenú záruku spoločnosti Lenovo (LLW) na adrese http://www.lenovo.com/warranty/llw_02. Ak záruku LLW neviete zobraziť, kontaktujte miestne zastúpenie spoločnosti Lenovo alebo jej predajcu a požiadajte o tlačenú verziu záruky LLW.

Záručné informácie týkajúce sa vášho počítača:

1. Záručná lehota: 1 rok
2. Typ záručného servisu: Servis dielcov vymeniteľných zákazníkom (dielcov CRU) a Služba doručenia zákazníkom
3. Verzia obmedzenej záruky Lenovo: L505-0010-02 08/2011

V prípade záujmu o záručný servis volajte na čísla uvedené v telefónnom zozname na adrese http://www.lenovo.com/support/phone. Telefónne čísla môžu byť zmenené bez predchádzajúceho upozornenia.

Lenovova omejena garancija – obvestilo za stranke

Omejeno garancijo Lenovo (LLW) si lahko preberete na naslovu http://www.lenovo.com/warranty/llw_02. Če si ne morete ogledati omejene garancije Lenovo (LLW), se obrnite na lokalno pisarno Lenovo ali prodajalca, kjer boste dobili natisnjeno različico.

Garancijske informacije, ki veljajo za vaš računalnik:

1. Garancijsko obdobje: 1 leto
2. Vrsta garancijskega servisa: nadomestni del, ki ga lahko zamenja stranka (CRU), in osebna dostava na servis
3. Različica omejene garancije Lenovo: L505-0010-02 08/2011

V zvezi z garancijo za storitve je na naslovu http://www.lenovo.com/support/phone na voljo seznam telefonskih številk. Pridržujemo si pravico do sprememb telefonskih številk brez predhodnega obvestila.

Garantía Limitada de Lenovo - Aviso para el cliente

Lea la Garantía limitada de Lenovo (LLW) en http://www.lenovo.com/warranty/llw_02. Si no puede ver la LLW, comuníquese con la oficina local de Lenovo o el revendedor para obtener una versión impresa de LLW.

Información de la garantía aplicable a su equipo:

1. Periodo de garantía: 1 año
2. Tipo de servicio de garantía: Unidad reemplazable por el cliente (CRU) y servicios centralizados
3. Versión de la garantía limitada de Lenovo: L505-0010-02 08/2011

Para conocer el servicio de garantía, consulte la lista de teléfonos en http://www.lenovo.com/support/phone. Estos números de teléfono están sujetos a cambio sin previo aviso.

Kundbrev om Lenovo Begränsad Garanti

Läs Lenovos begränsade garanti (LLW) på http://www.lenovo.com/warranty/llw_02. Om du inte kan visa LLW-garantitexten kan du kontakta ditt lokala Lenovo-kontor eller din återförsäljare och be om en tryckt version av LLW-garantitexten.

Garantiinformation för den produkt du har köpt:

1. Garantitid: 1 år
2. Typ av garantiservice: CRU (Customer Replaceable Unit - kunden byter själv delen) och inlämningsservice
3. Version av Lenovo Begränsad Garanti: L505-0010-02 08/2011

Om du behöver garantiservice använder du telefonlistan på http://www.lenovo.com/support/phone. Telefonnumren kan komma att ändras utan att detta meddelas i förväg.

Lenovo Uluslararası Garanti Bildirimi - Müşteri Notu

Lenovo Uluslararası Garanti Bildirimi'ni (LLW) http://www.lenovo.com/warranty/llw_02 adresinden okuyun. LLW belgesini görüntüleyemezseniz, yerel Lenovo ofisine ya da yetkili satıcısına başvurarak LLW belgesinin yazılı bir kopyasını edinin.

Makineniz için geçerli olan garanti bilgileri:

1. Garanti Süresi: 2 yıl
2. Garanti Hizmetinin Tipi: Müşteri Tarafından Değiştirilebilir Birim (CRU) ve Müşteri Tarafından Teslim
3. Lenovo Uluslararası Garanti Bildirimi Sürümü: L505-0010-02 08/2011

Garanti hizmeti için http://www.lenovo.com/support/phone adresindeki telefon listesine bakın. Telefon numaraları önceden bildirilmeden değiştirilebilir.

Обмежена гарантія Lenovo – Примітки для покупця

Ознайомтеся з Обмеженою гарантією Lenovo (LLW) на сайті http://www.lenovo.com/warranty/llw_02. Якщо не вдається переглянути LLW, зверніться до локального офісу Lenovo або до торгового посередника, який надасть вам роздруковану версію LLW.

Гарантійна інформація для вашого комп'ютера:

1. Гарантійний термін: 1 рік
2. Тип гарантійного обслуговування: обслуговування на основі елементів, замінюваних користувачем (CRU), і обслуговування виробів, зданих клієнтами
3. Версія обмеженої гарантії Lenovo: L505-0010-02 08/2011

З питань отримання гарантійного обслуговування звертайтесь за телефонами, наведеними на сайті http://www.lenovo.com/support/phone. Номери телефонів можуть змінюватися без попереднього повідомлення.

Lenovo product service information

Lenovo product service information for Taiwan

委製商/進口商名稱 :荷蘭商聯想股份有限公司台灣分公司

進口商地址: 台北市內湖區堤頂大道 2 段 89 號 5 樓

進口商電話: 0800-000-702 (代表號)

Compliance information

The latest compliance information is available at:
http://www.lenovo.com/compliance

Electronic emission notices

The following information refers to the ThinkStation Front Fan Assembly.

This equipment is outside the scope of EMC Directive 2014/30/EU **on the approximation of the laws of the member states relating to electromagnetic compatibility, because it has no direct function for the needs of the end user and is therefore not apparatus within the meaning of the EMC Directive. This equipment has been tested in a typical Lenovo product, which continued to conform to the requirements of the EMC Directive.**

Notices

Lenovo may not offer the products, services, or features discussed in this document in all countries. Consult your local Lenovo representative for information on the products and services currently available in your area. Any reference to a Lenovo product, program, or service is not intended to state or imply that only that Lenovo product, program, or service may be used. Any functionally equivalent product, program, or service that does not infringe any Lenovo intellectual property right may be used instead. However, it is the user's responsibility to evaluate and verify the operation of any other product, program, or service.

Lenovo may have patents or pending patent applications covering subject matter described in this document. The furnishing of this document does not give you any license to these patents. You can send license inquiries, in writing, to:

Lenovo (United States), Inc.
1009 Think Place - Building One
Morrisville, NC 27560
U.S.A.
Attention: Lenovo Director of Licensing

LENOVO PROVIDES THIS PUBLICATION "AS IS" WITHOUT WARRANTY OF ANY KIND, EITHER EXPRESS OR IMPLIED, INCLUDING, BUT NOT LIMITED TO, THE IMPLIED WARRANTIES OF NON-INFRINGEMENT, MERCHANTABILITY OR FITNESS FOR A PARTICULAR PURPOSE. Some jurisdictions do not allow disclaimer of express or implied warranties in certain transactions, therefore, this statement may not apply to you.

This information could include technical inaccuracies or typographical errors. Changes are periodically made to the information herein; these changes will be incorporated in new editions of the publication. Lenovo may make improvements and/or changes in the product(s) and/or the program(s) described in this publication at any time without notice.

Export Classification Notice

This product is subject to the United States Export Administration regulations (EAR) and has an Export Classification Control Number (ECCN) of 5A992.b. It can be re-exported except to any of the embargoed countries in the EAR E1 country list.

Recycling and environmental information

Lenovo encourages owners of information technology (IT) equipment to responsibly recycle their equipment when it is no longer needed. Lenovo offers a variety of programs and services to assist equipment owners in recycling their IT products. For information on recycling Lenovo products, go to:
http://www.lenovo.com/recycling
Recycling and disposal information for Japan is available at:
http://www.lenovo.com/recycling/japan
The latest environmental information about our products is available at:
http://www.lenovo.com/ecodeclaration

Recycling information for China

《废弃电器电子产品回收处理管理条例》提示性说明

联想鼓励拥有联想品牌产品的用户当不再需要此类产品时，遵守国家废弃电器电子产品回收处理相关法律法规，将其交给当地具有国家认可的回收处理资质的厂商进行回收处理。更多回收服务信息，请点击进入 http://support.lenovo.com.cn/activity/551.htm

Recycling information for Brazil

Declarações de Reciclagem no Brasil

Descarte de um Produto Lenovo Fora de Uso

Equipamentos elétricos e eletrônicos não devem ser descartados em lixo comum, mas enviados à pontos de coleta, autorizados pelo fabricante do produto para que sejam encaminhados e processados por empresas especializadas no manuseio de resíduos industriais, devidamente certificadas pelos orgãos ambientais, de acordo com a legislação local.

A Lenovo possui um canal específico para auxiliá-lo no descarte desses produtos. Caso você possua um produto Lenovo em situação de descarte, ligue para o nosso SAC ou encaminhe um e-mail para: reciclar@lenovo.com, informando o modelo, número de série e cidade, a fim de enviarmos as instruções para o correto descarte do seu produto Lenovo.

Important battery and WEEE information

Batteries and electrical and electronic equipment marked with the symbol of a crossed-out wheeled bin may not be disposed as unsorted municipal waste. Batteries and waste of electrical and electronic equipment (WEEE) shall be treated separately using the collection framework available to customers for the return, recycling, and treatment of batteries and WEEE. When possible, remove and isolate batteries from WEEE prior to placing WEEE in the waste collection stream. Batteries are to be collected separately using the framework available for the return, recycling, and treatment of batteries and accumulators.

Country-specific information is available at:
http://www.lenovo.com/recycling

Restriction of Hazardous Substances (RoHS) Directive

European Union RoHS

This Lenovo product, with included parts (cables, cords, and so on) meets the requirements of Directive 2011/65/EU on the restriction of the use of certain hazardous substances in electrical and electronic equipment ("RoHS recast" or "RoHS 2").

For more information about Lenovo worldwide compliance on RoHS, go to:
http://www.lenovo.com/social_responsibility/us/en/RoHS_Communication.pdf

China RoHS

为满足中国电子电气产品有害物质限制相关的法律法规和其他要求，联想公司对本产品中有害物质，按部件分类，声明如下。

部件名称	有害物质					
	铅 (Pb)	汞 (Hg)	镉 (Cd)	六价铬 (Cr（VI）)	多溴联苯 (PBB)	多溴二苯醚 (PBDE)
印刷电路板组件*	X	O	O	O	O	O
外壳及附件	X	O	O	O	O	O

本表格依据SJ/T 11364的规定编制。
O：表示该有害物质在该部件所有均质材料中的含量均在GB/T 26572规定的限量要求以下。
X：表示该有害物质至少在该部件的某一均质材料中的含量超出GB/T 26572规定的限量要求。
表中标记“X”的部件，皆因全球技术发展水平限制而无法实现有害物质的替代。

印刷电路板组件*：包括印刷电路板及其零部件，电子元器件等

根据产品型号不同，您所购买的产品可能不会含有以上所有部件

在中华人民共和国境内销售的电子电气产品上将印有“环保使用期”（EPuP）符号。圆圈中的数字代表产品的正常环保使用年限。

Turkish RoHS

The Lenovo product meets the requirements of the Republic of Turkey Directive on the Restriction of the Use of Certain Hazardous Substances in Waste Electrical and Electronic Equipment (WEEE).

Türkiye AEEE Yönetmeliğine Uygunluk Beyanı

Bu Lenovo ürünü, T.C. Çevre ve Orman Bakanlığı'nın "Atık Elektrik ve Elektronik Eşyalarda Bazı Zararlı Maddelerin Kullanımının Sınırlandırılmasına Dair Yönetmelik (AEEE)" direktiflerine uygundur.

AEEE Yönetmeliğine Uygundur.

Ukraine RoHS

Цим підтверджуємо, що продукція Леново відповідає вимогам нормативних актів України, які обмежують вміст небезпечних речовин

India RoHS

RoHS compliant as per E-Waste (Management & Handling) Rules.

İthalatçı – İmalatçı/Üretici Firma Bilgileri ve Diğer Bilgiler

1. İmalatçı ya da ithalatçı firmaya ilişkin bilgiler:
Ürünün ithalatçı firması, Lenovo Technology B.V. Merkezi Hollanda Türkiye İstanbul Şubesi'dir. Adresi ve telefonu şöyledir:
Palladium Tower İş Merkezi
Barbaros Mah. Kardelen Sok. No:2 Kat: 3 Ofis No: 13 34746 Ataşehir İstanbul, Türkiye
Tel: 90 216 570 01 00
Faks: 90 216 577 01 00
2. Bakım, onarım ve kullanımda uyulması gereken kurallar:
Elektronik cihazlar için gösterilmesi gereken standart özeni göstermeniz yeterlidir. Cihaz çalışır durumda iken temizlik yapmayınız. Islak bezle, köpürtülmüş deterjanlarla, sulu süngerlerle temizlik yapmayınız. Son kullanıcılar onarım konusunda yetkili değildir. Arıza söz konusu olduğuna inanıyorsanız telefonla danışabilir ya da ürünü bu kitapta yer alan servis istasyonlarından birine götürebilirsiniz.
3. Taşıma ve nakliye sırasında dikkat edilecek hususlar:
Ürününüzü ve bağlı olduğu aygıtı taşırken ya da nakliye sırasında dikkat etmeniz gereken birkaç nokta vardır. Aygıt taşımadan önce tüm bağlı ortamların çıkartılmış olması, bağlı aygıtların çözülmesi ve kabloların sökülmüş olması gerekir. Bu aygıtın zarar görmemesi için gereklidir.
Ayrıca aygıtınızı taşırken uygun koruma sağlayan bir taşıma kutusu kullanılmasına dikkat edin. Bakıma ilişkin diğer ek bilgiler için kitabın ilgili bölümünden (eğer sağlanmışsa) yararlanabilirsiniz.
4. Aygıta ilişkin bakım, onarım ya da temizliğe ilişkin bilgiler:
Aygıta ilişkin kullanıcının yapabileceği bir bakım ya da onarım yoktur. Bakım ya da onarıma gereksinim duyarsanız bir Çözüm Ortağı'ndan destek alabilirsiniz. Ayrıca servis istasyonlarına ilişkin bilgileri kitabınızın eklerinde bulabilirsiniz.
5. Kullanım sırasında insan ya da çevre sağlığına zararlı olabilecek durumlar:
Bu tür durumlar söz konusu olduğunda ürüne özel olarak bu kitabın ilgili bölümünde detaylı olarak ele alınmıştır. Kitabınızda bu tür bir uyarı yoksa, kullanmakta olduğunuz ürün için böyle bir durum söz konusu değildir.
6. Kullanım hatalarına ilişkin bilgiler:
Burada belirtilenler ile sınırlı olmamak kaydı ile bu bölümde bazı kullanıcı hatalarına ilişkin örnekler sunulmuştur. Bu ve benzeri konulara özen göstermeniz yeterlidir. Kılavuz içinde daha ayrıntılı bilgiler verilebilir.
Örnekler:
Kabloların zorla ait olmadıkları yuvalara takılması Kumanda butonlarına gereğinden yüksek kuvvet uygulanması Aleti çalışır durumda taşımak, temizlemek vb. eylemler Alet üzerine katı ya da sıvı gıda maddesi dökülmesi Aletin taşıma sırasında korunmaması ve darbe alması
7. Ürünün özelliklerine ilişkin tanıtıcı ve temel bilgiler:
Ürününüze ilişkin tanıtıcı ve temel bilgileri kitabınızın ilgili bölümlerinde bulabilirsiniz.
8. Periyodik bakıma ilişkin bilgiler:
Ürün bir uzmanın yapması gereken periodik bakımı içermez.
9. Bağlantı ve montaja ilişkin bilgiler:
Aksamınızı çalışır hale getirebilmeniz için gerekli bağlantı ve montaj bilgileri bu kılavuzda yer almaktadır. Kuruluş işlemini kendiniz yapmak istemiyorsanız satıcınızdan ya da bir Servis İstasyonu'ndan ücret karşılığı destek alabilirsiniz.
10. Tüketicinin Hakları
10.1. Garanti süresi, malın teslim tarihinden itibaren başlar ve 2 yıldır.
10.2. Malın bütün parçaları dahil olmak üzere tamamı garanti kapsamındadır.
10.3. Malın ayıplı olduğunun anlaşılması durumunda tüketici, 6502 sayılı Tüketicinin Korunması Hakkında Kanunun 11 inci maddesinde yer alan;
a- Sözleşmeden dönme,
b- Satış bedelinden indirim isteme,
c- Ücretsiz onarılmasını isteme,
ç- Satılanın ayıpsız bir misli ile değiştirilmesini isteme, haklarından birini kullanabilir.
10.4.Tüketicinin bu haklardan ücretsiz onarım hakkını seçmesi durumunda satıcı; işçilik masrafı, değiştirilen parça bedeli ya da başka herhangi bir ad altında hiçbir ücret talep etmeksizin malın onarımını yapmak veya yaptırmakla yükümlüdür. Tüketici ücretsiz onarım hakkını üretici veya ithalatçıya karşı da kullanabilir. Satıcı, üretici ve ithalatçı tüketicinin bu hakkını kullanmasından müteselsilen sorumludur.
10.5.Tüketicinin, ücretsiz onarım hakkını kullanması halinde malın;
- Garanti süresi içinde tekrar arızalanması,
- Tamiri için gereken azami sürenin aşılması,
- Tamirinin mümkün olmadığının, yetkili servis istasyonu, satıcı, üretici veya ithalatçı tarafından bir raporla belirlenmesi durumlarında; tüketici malın bedel iadesini, ayıp oranında bedel indirimini veya imkân varsa malın ayıpsız misli ile değiştirilmesini satıcıdan talep edebilir. Satıcı, tüketicinin talebini reddedemez. Bu talebin yerine getirilmemesi durumunda satıcı, üretici ve ithalatçı müteselsilen sorumludur.
10.6. Malın tamir süresi 20 iş gününü geçemez. Bu süre, garanti süresi içerisinde mala ilişkin arızanın yetkili servis istasyonuna veya satıcıya bildirimi tarihinde, garanti süresi dışında ise malın yetkili servis istasyonuna teslim tarihinden itibaren başlar.Malın arızasının 10 iş günü içerisinde giderilememesi halinde, üretici veya ithalatçı; malın tamiri tamamlanıncaya kadar, benzer özelliklere sahip başka bir malı tüketicinin kullanımına tahsis etmek zorundadır. Malın garanti süresi içerisinde arızalanması durumunda, tamirde geçen süre garanti süresine eklenir.
10.7.Malın kullanma kılavuzunda yer alan hususlara aykırı kullanılmasından kaynaklanan arızalar garanti kapsamı dışındadır.
10.8.Tüketici, garantiden doğan haklarının kullanılması ile ilgili olarak çıkabilecek uyuşmazlıklarda yerleşim yerinin bulunduğu veya tüketici işleminin yapıldığı yerdeki Tüketici Hakem Heyetine veya Tüketici Mahkemesine başvurabilir.
10.9.Satıcı tarafından bu Garanti Belgesinin verilmememesi durumunda, tüketici Gümrük ve Ticaret Bakanlığı Tüketicinin Korunması ve Piyasa Gözetimi Genel Müdürlüğüne başvurabilir.
11. Bakanlıkça tespit ve ilan edilen kullanım ömrü: Bakanlıkça tespit ve ilan edilen kullanım ömrü 5 yıldır.
12. Enerji tüketen mallarda, malın enerji tüketimi açısından verimli kullanımına ilişkin bilgiler: Ürüne ait kullanma kılavuzunda belirtilmiştir.
13. Servis istasyonlarına ilişkin bilgiler**:** Bunlar kitabınızı aynı başlıklı bölümünde belirtilmiştir. Herhangi bir onarım ya da yedek parça ihtiyacı durumda bu istasyonlardan birine başvurabilirsiniz.
14. İthal edilmiş mallarda, yurt dışındaki üretici firmanın unvanı ve açık adresi ile diğer erişim bilgileri (telefon, telefaks ve e-posta vb.):
Lenovo PK HK Limited
23/F, Lincoln House, Taikoo Place,
979 King's Road, Quarry Bay, Hong Kong
Tel: +852-2516 4700
Faks: +852-2516 5384

Servis İstasyonları ve Yedek Parça Malzemelerinin Temin Edileceği Adresler

Garanti süresi içerisinde müşteri arızalı ürünü aşağıda belirtilen merkezlere teslim ederek garanti hizmetinden yararlanır. Ürün yerinde garanti hizmeti içeriyorsa, bu merkezlerden birine telefon edebilirsiniz. Yedek parça malzemelerini de bu merkezlerden temin edebilirsiniz.
Garanti Hizmetinin Alınabileceği Merkezler
Arızalı Ideapad/IdeaCentre/Lenovo B serisi/Lenovo G serisi/Lenovo H serisi/Lenovo V serisi ürünlerini ücretsiz servise gönderebilmeniz için aşağıdaki numaralardan servis kaydı açtırabilirsiniz.
Lenovo Çağrı Merkezi : 0212 912 01 34
Garanti Hizmetinin Alınabileceği Merkezler:
ADANA
BDH Bilişim Destek Hiz. San. Ve Tic. A.Ş.
Mahfesığmaz Mahallesi, 79021 Sokak, Özden Apt. Zemin kat, No:15 Çukurova /Adana
http://www.bdh.com.tr
Tel : 0 212 314 10 10
AFYON
BDH Bilişim Destek Hiz. San. Ve Tic. A.Ş.
Dumlupınar Mah. Kamil Miras Cad.Afyon Kale Apt No:25/A Merkez /Afyon
http://www.bdh.com.tr
Tel : 0 212 314 10 10
ANKARA
BDH Bilişim Destek Hiz. San. Ve Tic. A.Ş.
ÇETİN EMEÇ BULVARI 1324. CADDE (ESKİ 7. CADDE) NO:37/5 ÖVEÇLER / ÇANKAYA
http://www.bdh.com.tr
Tel : 0 212 314 10 10.
ANTALYA
BDH Bilişim Destek Hiz. San. Ve Tic. A.Ş.
Çayırbaşı mh. Değirmenönü cd.No:129/6 Muratpaşa /ANTALYA
http://www.bdh.com.tr
Tel : 0 212 314 10 10
AYDIN
BDH Bilişim Destek Hiz. San. Ve Tic. A.Ş.
Efeler Mahallesi, Atatürk Bulvarı, Alaçam Cad. No:8 Zemin/A /AYDIN
http://www.bdh.com.tr
Tel : 0 212 314 10 10
BALIKESİR
BDH Bilişim Destek Hiz. San. Ve Tic. A.Ş.
2.Sakarya MH. Bağlar SK. NO: 223/1A Zemin Kat MERKEZ /BALIKESİR P.K.10020
http://www.bdh.com.tr
Tel : 0 212 314 10 10
BURSA
BDH Bilişim Destek Hiz. San. Ve Tic. A.Ş.
Fethiye Mah.Mudanya Cad.No:327 Solukçu İş Merkezi Bodrum Kat Nilüfer /BURSA
http://www.bdh.com.tr
Tel : 0 212 314 10 10
DENİZLİ
BDH Bilişim Destek Hiz. San. Ve Tic. A.Ş.
Değirmenönü Mah 1539 Sk N:39/1 Merkez /DENİZLİ
http://www.bdh.com.tr
Tel : 0 212 314