XT-4

XTENDED RANGE FOUR CHANNEL SUPERVISED STATIONARY TRANSMITTER

For Use With Linear's XR Series Xtended Range Receivers

WARNING: THIS PRODUCT SHOULD NOT BE USED IN LIFE SAFETY APPLICATIONS.

FCC Rules allow unlicensed high-power transmissions at or near the operating frequency of this product which may interfere with, or even disable, normal operation of this radio device.

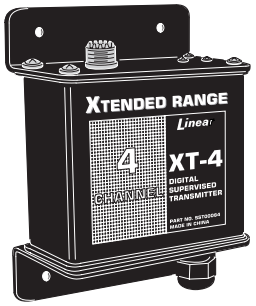

Installation Instructions

Linear®

(760) 438-7000 • FAX (760) 438-7043
USA & Canada (800) 421-1587 & (800) 392-0123
Toll Free FAX (800) 468-1340
www.linearcorp.com

1. PRODUCT DESCRIPTION

Linear's Xtended Range FM transmitters and receivers are designed for use in various wireless remote control applications. When triggered with an external switch, the Model XT-4 transmitter will send a 10 watt, 27.255 MHz, digital encoded, FSK modulated, signal to its companion receiver. The receiver will verify the digital code, activate its output, and trigger the remote device.

The XT-4 transmitter has full supervision capabilities. If the "status" option is selected, the XT-4 sends hourly status signals to its receiver. If these signals cease, the receiver will indicate trouble by activating its status output after four hours. Contact supervision allows the receiver's outputs to follow the transmitter's inputs, staying activated as long as each transmitter input is activated. Alternately, an "auto-restore" option can be selected, causing a momentary receiver output each time any transmitter input is activated. Each input can be configured for either N/O or N/C contacts (switch selectable).

Power for the XT-4 transmitter can come from an external regulated 12 VDC power supply (Linear Model T-1224DC) or from a 12-volt battery. A 3-amp fuse protects the unit from reverse power polarity. The XT-4 draws about 15 μA standby, and about two amps during transmissions. If the power supply voltage drops below 10.5 volts, a low battery message will be included with any signal transmitted, causing the receiver's low battery output to activate.

Two antennas (sold separately) are available for the XT-4. The Model ANT-1A is an 8-inch "rubber duck" antenna for short range applications (less than 1 mile). The ANT-1A requires a CON-180A (straight) connector to mate the antenna to the transmitter. For a right angle antenna, use the CON-180A plus the CON-90A.The Model ANT-2 is a 3-foot whip antenna for use in long range or difficult installations where more range from the XT-4 is required. A common 9-foot 1/4 wave CB whip antenna can also be used with the XT-4 for maximum range.

Two 8-position switches set the unit's system code. This code must be matched in the XT-4's receiver. There are 65,536 different system codes possible. The 4-position option switch selects the receiver's bank (for XR-16 receiver only), and options for status and auto-restore transmissions.

The transmitter is housed in a rugged weather-resistant metal enclosure with a sturdy SO-239 antenna connector and a water-tight wiring strain relief bushing. During transmissions, the red operation indicator (visible through a window on the case) lights. If the XT-4's input voltage is low, the indicator will blink during transmissions.

2. OPEN TRANSMITTER

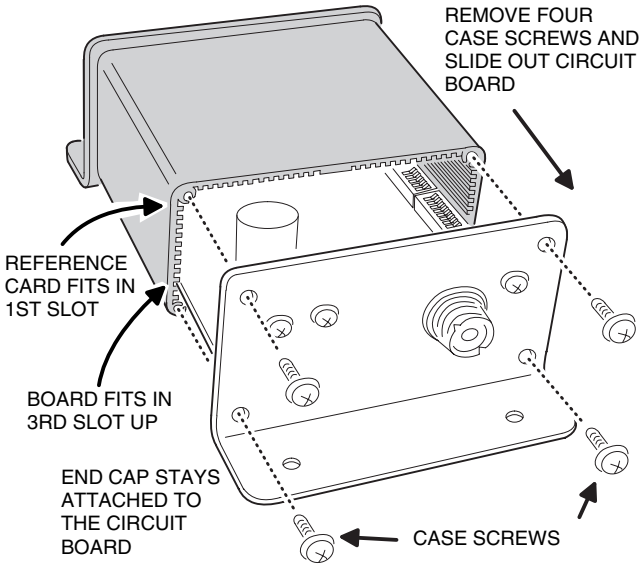

3. COMPONENT LOCATIONS

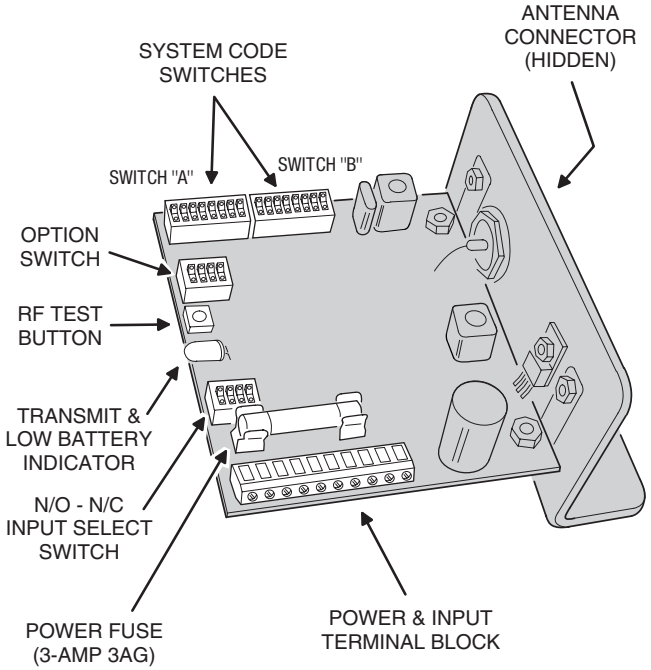

4. INSTALLATION TIPS

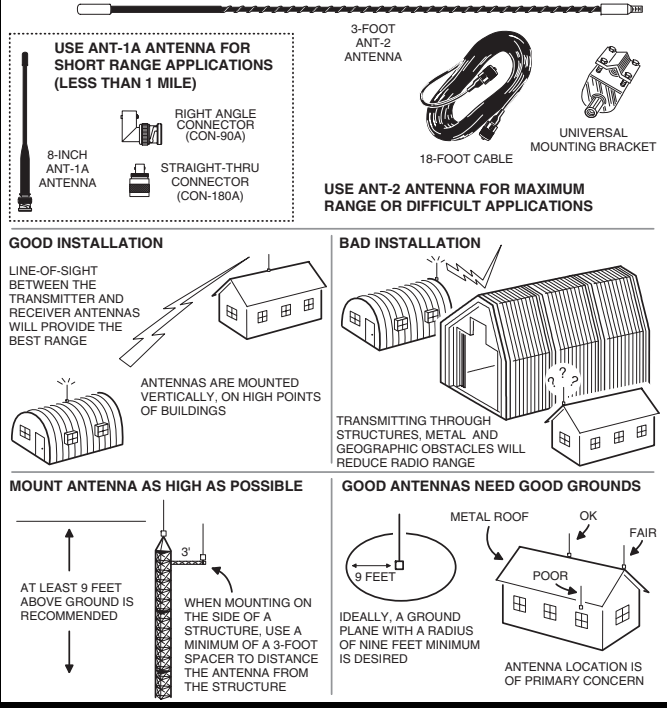

5. MOUNT TRANSMITTER CASE

If using the ANT-1A antenna: For best range mount the XT/XR unit to a metal plate with a minimum size of 12" x 12". The ANT-1A antenna should extend above the mounting plate and be free of obstructions. If the ANT-1A antenna cannot be mounted in the open, consider using an extension coaxial cable with PL-259 connectors to move the antenna's location.

The XT/XR series of radios operate in the 27 MHz Citizens Band (CB) and may use any CB antennas or CB antenna accessories. Antennas, PL-259 extension cables and other adapters are available at Radio Shack® or other electronics stores.

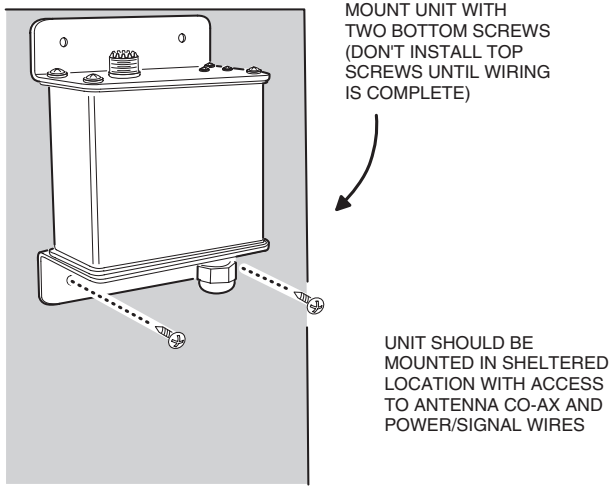

6. SET TRANSMITTER SWITCHES

SET OPTION SWITCH

RECEIVER BANK		
SWITCH 1	SWITCH 2	BANK #
OFF	OFF	1
ON	OFF	2
OFF	ON	3
ON	ON	4

SET SWITCHES 1 & 2 TO SELECT THE RECEIVER BANK THE TRANSMITTER ACTIVATES (USED ONLY FOR 16 CHANNEL RECEIVER, USE BANK 1 FOR ALL OTHERS)

STATUS REPORTS	
SWITCH 3	
OFF	NO STATUS REPORTS
ON	STATUS REPORTS

AUTO RESTORAL	
SWITCH 4	
OFF	MANUAL RESTORE
ON	AUTO RESTORE

SYSTEM CODE SWITCHES

SET SYSTEM CODE SWITCHES A & B TO MATCH SYSTEM CODE SWITCHES A & B IN THE RECEIVER

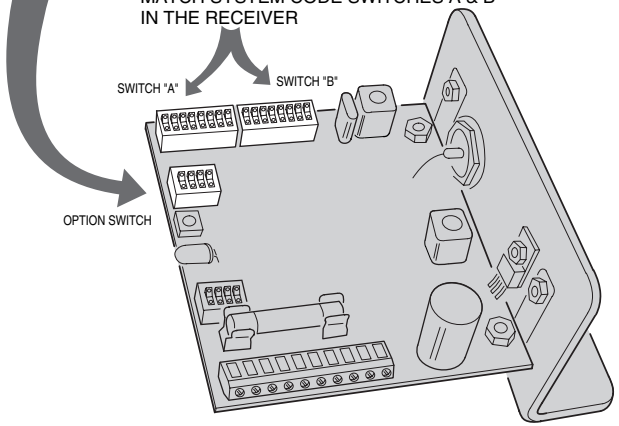

7. CONNECT POWER AND TRIGGER INPUTS

SET INPUT SELECT SWITCH TO MATCH INPUT TYPE FOR EACH CHANNEL

INPUT SELECT SWITCH			
SWITCH #	CHANNEL	OFF =	ON =
SWT 1	CH 1	N/O	N/C
SWT 2	CH 2	N/O	N/C
SWT 3	CH 3	N/O	N/C
SWT 4	CH 4	N/O	N/C

SET SWITCHES 1 - 4 TO SELECT THE NORMAL (NON-VIOLATED) STATE OF THE INPUT TRIGGER DEVICE
SWITCH OFF = N/O SWITCH ON = N/C

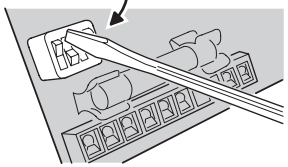

ROUTE WIRES THROUGH CASE STRAIN RELIEF BUSHING BEFORE CONNECTING TO TERMINALS

USE 18-24 AWG WIRE TO CONNECT POWER AND TRIGGER INPUTS

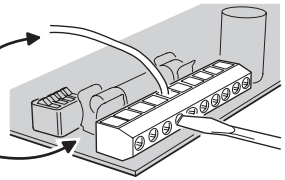

CAUTION: BE SURE WIRE STRANDS DO NOT TOUCH NEARBY FUSE

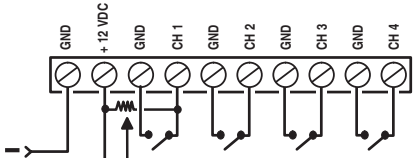

FOR RUNS LONGER THAN 3' CONNECT THE SUPPLIED 10K Ω RESISTOR FROM THE +12V SUPPLY TO THE "INPUT" TERMINAL OF THE SENSOR SWITCH

FROM 12 VDC, 2-AMP REGULATED POWER SOURCE

NOTE: MAXIMUM POWER WIRE RUN 25-FEET WITH 18 AWG WIRE

WARNING

THIS UNIT REQUIRES 12 VDC AT 2 AMPS. THE NO-LOAD VOLTAGE OF THE SUPPLY MUST NOT EXCEED 17.5 VDC OR DAMAGE TO THE UNIT WILL OCCUR!

8. MOUNT ANTENNA AND ROUTE CABLE

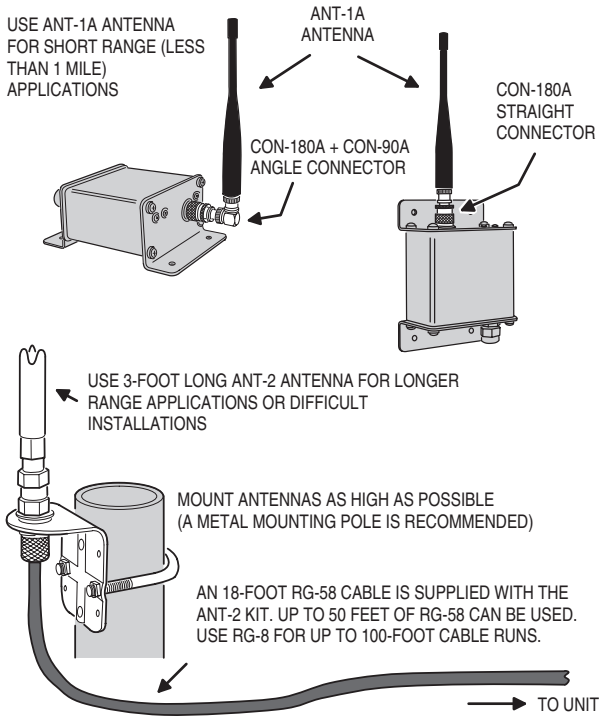

9. TEST SYSTEM

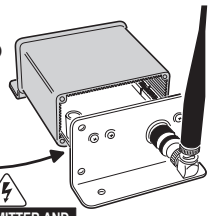

SLIDE BOARD INTO CASE IN THE 3RD SLOT UP

INSTALL AND SETUP THE COMPANION UNIT AS DESCRIBED IN ITS INSTALLATION INSTRUCTIONS

WARNING

NEVER CONNECT THE TRANSMITTER AND RECEIVER ANTENNA CONNECTORS DIRECTLY TO EACH OTHER. MAJOR DAMAGE TO BOTH UNITS WILL OCCUR!

TRANSMITTER

APPLY POWER AND TRIGGER THE TRANSMITTER'S INPUT

RECEIVER

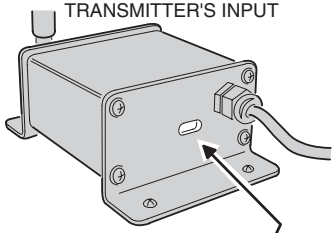

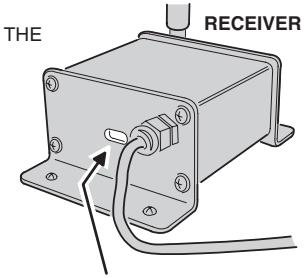

THE TRANSMIT INDICATOR SHOULD LIGHT WHEN THE TRANSMITTER IS TRIGGERED

THE RECEIVER'S SIGNAL INDICATOR SHOULD LIGHT AND OUTPUT SHOULD ACTIVATE

IF SYSTEM FAILS TEST, CHECK POWER, SWITCH SETTINGS AND ANTENNA CONNECTIONS

10. COMPLETE INSTALLATION

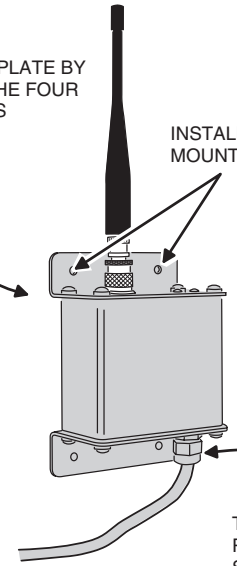

SECURE END PLATE BY INSTALLING THE FOUR CASE SCREWS

INSTALL THE TWO REMAINING MOUNTING SCREWS

TIGHTEN WIRING STRAIN RELIEF BUSHING TO SECURE AND WEATHER PROOF WIRING

TEST SYSTEM AGAIN AFTER COMPLETING INSTALLATION

LINEAR LIMITED WARRANTY

This Linear product is warranted against defects in material and workmanship for twelve (12) months. The Warranty Expiration Date is labeled on the product. This warranty extends only to wholesale customers who buy direct from Linear or through Linear's normal distribution channels. **Linear does not warrant this product to consumers.** Consumers should inquire from their selling dealer as to the nature of the dealer's warranty, if any. **There are no obligations or liabilities on the part of Linear LLC for consequential damages arising out of or in connection with use or performance of this product or other indirect damages with respect to loss of property, revenue, or profit, or cost of removal, installation, or reinstallation.** All implied warranties, including implied warranties for merchantability and implied warranties for fitness, are valid only until Warranty Expiration Date as labeled on the product. **This Linear LLC Warranty is in lieu of all other warranties express or implied.**

All products returned for warranty service require a Return Product Authorization Number (RPA#). Contact Linear Technical Services at 1-800-421-1587 for an RPA# and other important details.

IMPORTANT !!!

Linear radio controls provide a reliable communications link and fill an important need in portable wireless signaling. However, there are some limitations which must be observed.

- **WARNING: THIS PRODUCT IS NOT TO BE USED IN LIFE SAFETY APPLICATIONS. FCC Rules allow unlicensed high-power transmissions at or near the operating frequency of this product which may interfere with, or even disable, normal operation of this radio device.**
- For U.S. installations only: The radios are required to comply with FCC Rules and Regulations as Part 95 Radio Control devices. As such, they have limited transmitter power and therefore limited range.
- A receiver cannot respond to more than one transmitted signal at a time and may be blocked by radio signals that occur on or near their operating frequencies, regardless of code settings.
- Changes or modifications to the device may void FCC compliance.
- Infrequently used radio links should be tested regularly to protect against undetected interference or fault.
- A general knowledge of radio and its vagaries should be gained prior to acting as a wholesale distributor or dealer, and these facts should be communicated to the ultimate users.

Copyright © 2005 Linear LLC