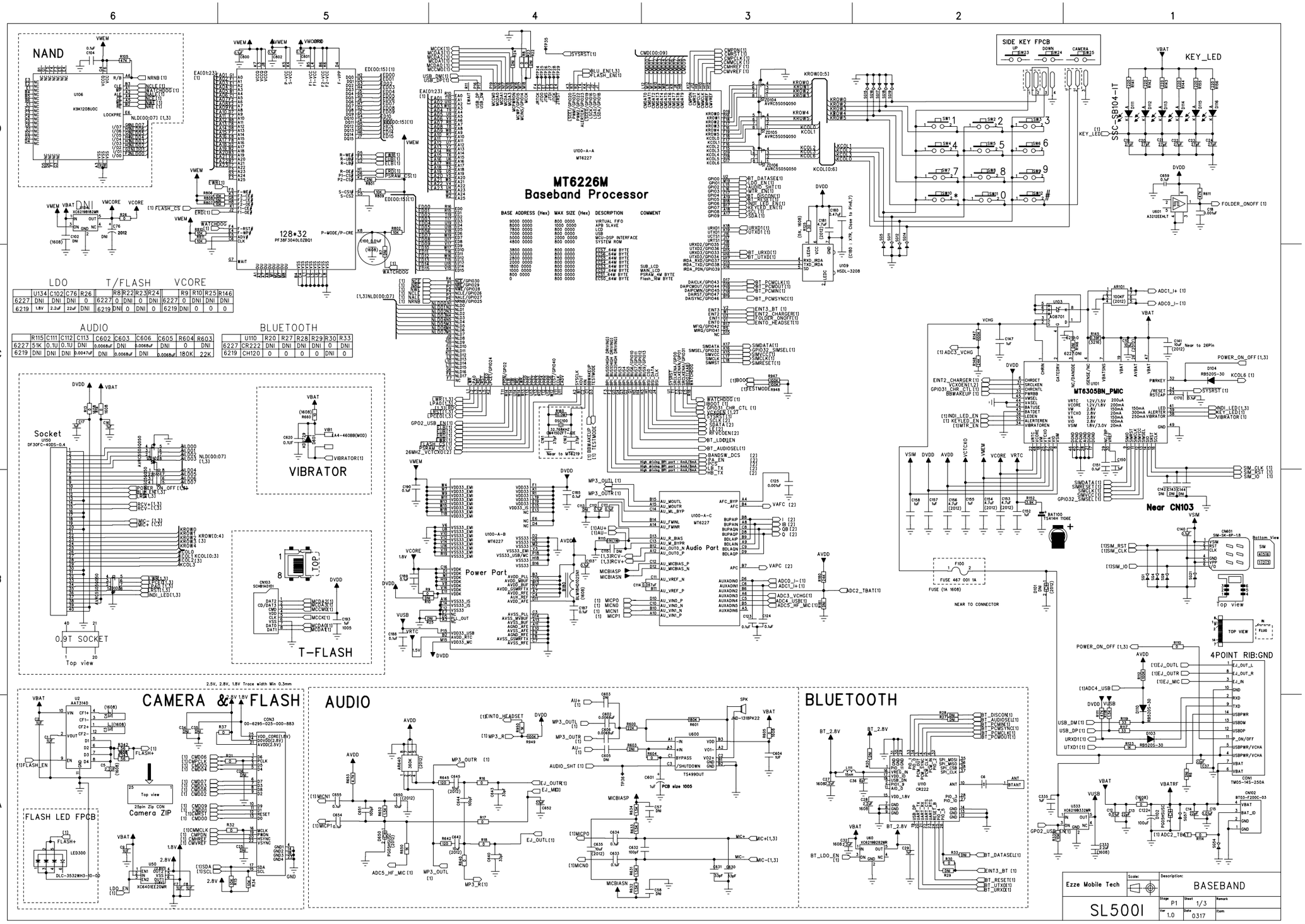
MT6226M
Baseband Processor
NAND
KEY_LED
SIDE KEY FPCB
Power Part
Audio Part
MT6305BN_PMIC
Near CN103
Socket
0.9T SOCKET
VIBRATOR
T-FLASH
CAMERA & FLASH
Camera ZIP
FLASH LED FPCB
AUDIO
BLUETOOTH
4POINT RIB:GND
LDO
T/FLASH
VCORE
AUDIO
BLUETOOTH
Ezze Mobile Tech
SL5001
BASEBAND
P1
1/3
1.0
0.317

PCB VERSION

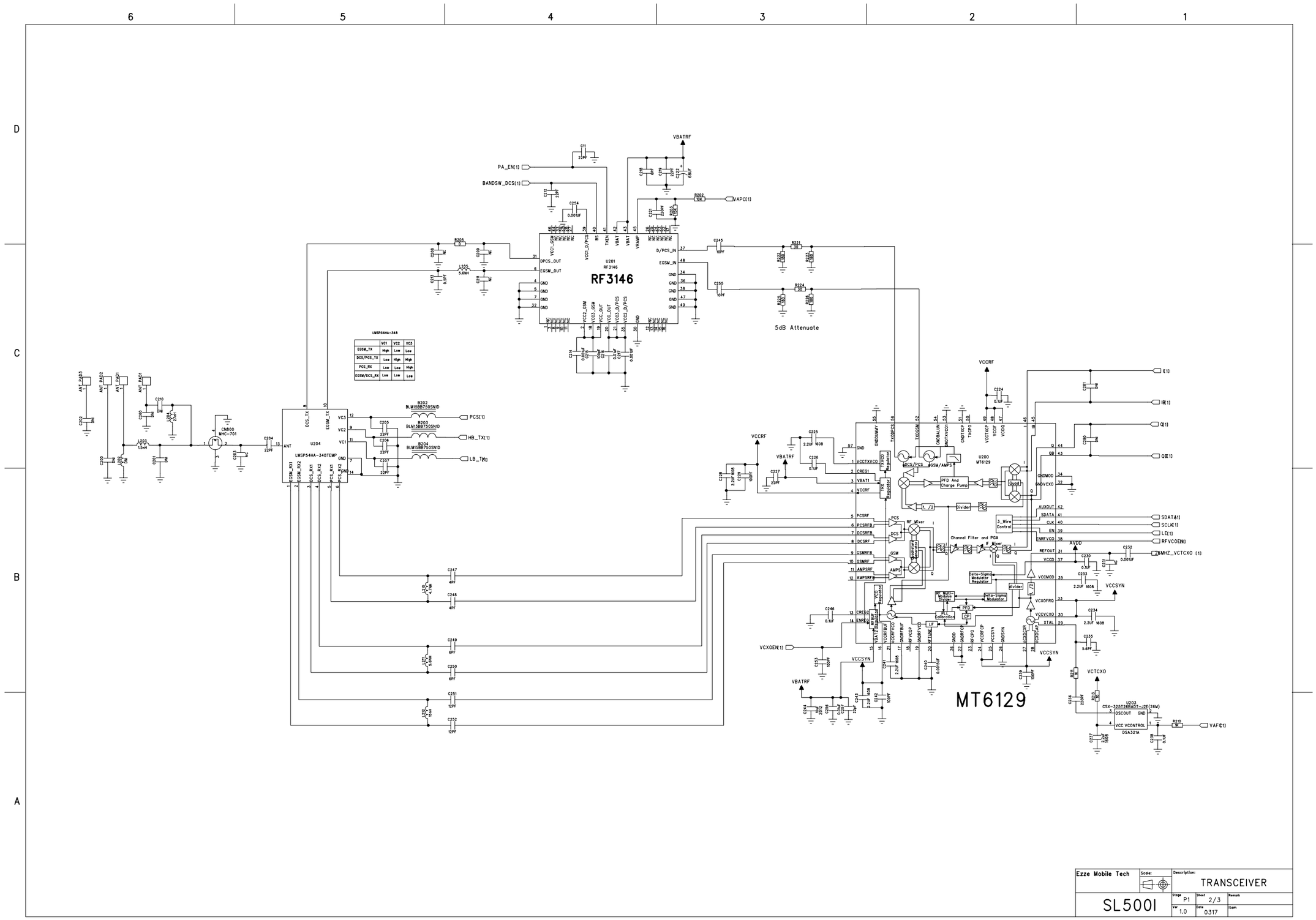
RF3146
U201
MT6129
U200
U204
LMSP54HA-34BTEMP
U203
CSX-325T26BA01-J2E(26M)
DSA321A
CN800
MHC-701
5dB Attenuate
VBATRF
VCCRF
VCCSYN
VCTCXO
VCXOEN(1)
PA_EN(1)
BANDSW_DCS(1)
VAPC(1)
PCS(1)
HB_TX(1)
LB_TX(1)
I(1)
IB(1)
Q(1)
QB(1)
SDATA(1)
SCLK(1)
LE(1)
RFVCOEN(1)
26MHZ_VCTCXO (1)
VAFC(1)
PFD And Charge Pump
Divider
Quad
3_Wire Control
RF Mixer
IF Mixer
Channel Filter and PGA
Delta-Sigma Modulator Regulator
Delta-Sigma Modulator
PFD
CP
PLL Calibration
DCS/PCS
GSM/AMPS
Ezze Mobile Tech
Scale:
Description:
TRANSCEIVER
SL500I
Stage P1
Sheet 2/3
Remark
Ver 1.0
Date 0317
Item