http://waterheatertimer.org/Two-water-heaters.html#boiler

http://waterheatertimer.org/What-size-indirect-heater.html

Installation, Operating and Service Instructions for

ALPINE™

Residential

- Condensing
- High Efficiency
- Direct Vent
- Gas-Fired
- Water Boiler

Intertek
9700609

H

ENERGY STAR

Models: 08 MBH through 285 MBH

As an ENERGY STAR® Partner, U.S. Boiler Company has determined that the ALPINE™ Series meets the ENERGY STAR® guidelines for energy efficiency established by the United States Environmental Protection Agency (EPA).

AHRI CERTIFIED®
www.ahridirectory.org

TO THE INSTALLER:
Affix these instructions adjacent to boiler.
TO THE CONSUMER:
Retain these instructions for future reference.

WARNING **Improper installation, adjustment, alteration, service or maintenance can cause property damage, injury, or loss of life. For assistance or additional information, consult a qualified installer, service agency or the gas supplier. This boiler requires a special venting system. Read these instructions carefully before installing.**

103448-10 - 6/18

Price - $5.00

IMPORTANT INFORMATION - READ CAREFULLY

NOTE: The equipment shall be installed in accordance with those installation regulations enforced in the area where the installation is to be made. These regulations shall be carefully followed in all cases. Authorities having jurisdiction shall be consulted before installations are made.

All wiring on boilers installed in the USA shall be made in accordance with the National Electrical Code and/or local regulations.

All wiring on boilers installed in Canada shall be made in accordance with the Canadian Electrical Code and/or local regulations.

The City of New York requires a Licensed Master Plumber supervise the installation of this product.

The Massachusetts Board of Plumbers and Gas Fitters has approved the Alpine™ Series boiler. See the Massachusetts Board of Plumbers and Gas Fitters website, http://license.reg.state.ma.us/pubLic/pl_products/pb_pre_form.asp for the latest Approval Code or ask your local Sales Representative.

The Commonwealth of Massachusetts requires this product to be installed by a Licensed Plumber or Gas Fitter.

The following terms are used throughout this manual to bring attention to the presence of hazards of various risk levels, or to important information concerning product life.

DANGER Indicates an imminently hazardous situation which, if not avoided, will result in death, serious injury or substantial property damage.

CAUTION Indicates a potentially hazardous situation which, if not avoided, may result in moderate or minor injury or property damage.

WARNING Indicates a potentially hazardous situation which, if not avoided, could result in death, serious injury or substantial property damage.

***NOTICE* Indicates special instructions on installation, operation, or maintenance which are important but not related to personal injury hazards.**

DANGER Explosion Hazard. DO NOT store or use gasoline or other flammable vapors or liquids in the vicinity of this or any other appliance.

If you smell gas vapors, DO NOT try to operate any appliance - DO NOT touch any electrical switch or use any phone in the building. Immediately, call the gas supplier from a remotely located phone. Follow the gas supplier's instructions or if the supplier is unavailable, contact the fire department.

Special Installation Requirements for Massachusetts

A. For all sidewall horizontally vented gas fueled equipment installed in every dwelling, building or structure used in whole or in part for residential purposes and where the sidewall exhaust vent termination is less than seven (7) ft. above grade, the following requirements shall be satisfied:

1. If there is no carbon monoxide detector with an alarm already installed in compliance with the most current edition of NFPA 720, NFPA 70 and the Massachusetts State Building Code in the residential unit served by the sidewall horizontally vented gas fueled equipment, a battery operated carbon monoxide detector with an alarm shall be installed in compliance with the most current edition of NFPA 720, NFPA 70 and the Massachusetts State Building Code.
2. In addition to the above requirements, if there is not one already present, a carbon monoxide detector with an alarm and a battery back-up shall be installed and located in accordance with the installation requirements supplied with the detector on the floor level where the gas equipment is installed. The carbon monoxide detector with an alarm shall comply with 527 CMR, ANSI/UL 2034 Standards or CSA 6.19 and the most current edition of NFPA 720. In the event that the requirements of this subdivision can not be met at the time of the completion of the installation of the equipment, the installer shall have a period of thirty (30) days to comply with this requirement; provided, however, that during said thirty (30) day period, a battery operated carbon monoxide detector with an alarm shall be installed in compliance with the most current edition of NFPA 720, NFPA 70 and the Massachusetts State Building Code. In the event that the sidewall horizontally vented gas fueled equipment is installed in a crawl space or an attic, the carbon monoxide detector may be installed on the next adjacent habitable floor level. Such detector may be a battery operated carbon monoxide detector with an alarm and shall be installed in compliance with the most current edition of NFPA 720, NFPA 70 and the Massachusetts State Building Code.
3. A metal or plastic identification plate shall be permanently mounted to the exterior of the building at a minimum height of eight (8) ft. above grade directly in line with the exhaust vent terminal for the horizontally vented gas fueled heating appliance or equipment. The sign shall read, in print size no less than one-half (1/2) inch in size, **"GAS VENT DIRECTLY BELOW. KEEP CLEAR OF ALL OBSTRUCTIONS".**
4. A final inspection by the state or local gas inspector of the sidewall horizontally vented equipment shall not be performed until proof is provided that the state or local electrical inspector having jurisdiction has granted a permit for installation of carbon monoxide detectors and alarms as required above.

B. EXEMPTIONS: The following equipment is exempt from 248 CMR 5.08(2)(a) 1 through 4:

1. The equipment listed in Chapter 10 entitled "Equipment Not Required To Be Vented" in the most current edition of NFPA 54 as adopted by the Board; and
2. Product Approved sidewall horizontally vented gas fueled equipment installed in a room or structure separate from the dwelling, building or structure used in whole or in part for residential purposes.

C. When the manufacturer of Product Approved sidewall horizontally vented gas equipment provides a venting system design or venting system components with the equipment, the instructions for installation of the equipment and the venting system shall include:

1. A complete parts list for the venting system design or venting system; and
2. Detailed instructions for the installation of the venting system design or the venting system components.

D. When the manufacturer of a Product Approved sidewall horizontally vented gas fueled equipment does not provide the parts for venting flue gases, but identifies "special venting systems", the following shall be satisfied:

1. The referenced "special venting system" instructions shall be included with the appliance or equipment installation instructions; and
2. The "special venting systems" shall be Product Approved by the Board, and the instructions for that system shall include a parts list and detailed installation instructions.

E. A copy of all installation instructions for all Product Approved sidewall horizontally vented gas fueled equipment, all venting instructions, all parts lists for venting instructions, and/or all venting design instructions shall remain with the appliance or equipment at the completion of the installation.

Table of Contents

I. Product Description, Specifications and Dimensional Data 5
II. Unpacking Boiler 9
III. Pre-Installation and Boiler Mounting 10
IV. Venting 17
A. General Guidelines 18
B. CPVC/PVC Venting 22
C. Polypropylene Venting 35
D. Stainless Steel Venting 43
E. Removing the Existing Boiler 48
F. Multiple Boiler Installation Venting 50
V. Condensate Disposal 52
VI. Water Piping and Trim 54
VII. Gas Piping 70
VIII. Electrical 74
IX. System Start-up 88
X. Operation 96
A. Overview 96
B. Supply Water Temperature Regulation 97
C. Boiler Protection Features 98
D. Multiple Boiler Control Sequencer 99
E. Boiler Sequence of Operation 100
1. Normal Operation 100
2. Using The Display 101
3. Status Screens 102
4. Detail Screens 104
5. Multiple Boiler Sequencer Screens 105
F. Changing Adjustable Parameters 106
1. Entering Adjust Mode 106
2. Adjusting Parameters 107
XI. Service and Maintenance 124
XII. Troubleshooting 131
XIII. Repair Parts 136

I. Product Description, Specifications and Dimensional Data

Alpine™ Series boilers are condensing high efficiency gas-fired direct vent hot water heating boilers designed for use in forced hot water space or space heating with indirect domestic hot water heating systems, where supply water temperature does not exceed 210°F. These boilers have special coil type stainless steel heat exchangers, constructed, tested and stamped per Section IV 'Rules for Construction of Heating Boilers' of ASME Boiler and Pressure Vessel Code, which provide a maximum heat transfer and simultaneous protection against flue gas product corrosion. These boilers are not designed for use in gravity hot water space heating systems or systems containing significant amount of dissolved oxygen (swimming pool water heating, direct domestic hot water heating, etc.).

Table 1A: Specifications

Specification	Boiler Model				
	ALP080B	ALP105B	ALP150B	ALP210B	ALP285B
Altitude (ft. above sea level)	0-4500	0-4500	0-4500	0-4500	0-4500
Fuel	Shipped for Natural Gas, Field Converted for LP Gas				
Max. Allowable Water Temperature (°F)	210				
Max. Allowable Working Pressure (psi)	160				
Factory supplied Safety Relief Valve (psi) *	30				
Boiler Water Volume (gal.)	0.6	0.7	1.3	1.7	2.4
Heat Transfer area (sq. ft.)	7.3	9.1	16.4	21.8	29.1
Approx. Shipping weight (lb.)	137	155	182	206	256

* Optional 50 psi, 80 psi and 100 psi safety relief valves are available for all models.

Table 1B: Dimensional Data (See Figures 1A, 1B, 1C)

Dimension	Boiler Model				
	ALP080B (1)	ALP105B (1)	ALP150B (1)	ALP210B (1)	ALP285B (2)
A - Inch (mm)	12-9/16 (320)	14 (356)	19-11/16 (500)	23-15/16 (608)	21-13/16 (554)
B - Inch (mm)	5-5/8 (142)	5-13/16 (147)			7-5/16 (185)
C - Inch (mm)	7-5/16 (186)				14-1/8 (358)
D - Inch (mm)	9-5/16 (237)	10-3/4 (273)	16-7/16 (417)	17-1/8 (435)	18 (456)
E - Inch (mm)	5-15/16 (151)				12-1/4 (312)
Gas Inlet F (FPT)	1/2"				3/4"
Return G (FPT)	1"				1-1/4"
Supply H (FPT)	1"				1-1/4"
Condensate Drain J *	* Factory Provided Socket End Compression Pipe Joining Clamp for 3/4" Schedule 40 PVC Pipe				
Boiler Two-Pipe CPVC/PVC Vent Connector (Figs. 1A, 1C) - Inch	3 x 3				4 x 4
Boiler CPVC Vent Connector/Pipe (Fig. 1B) - Inch	3"				N/A
Boiler Inlet Air Connector (Fig. 1B) - Inch	3"				N/A

NOTES:

(1) - These boiler models available as either Floor mounted (suffix F) or, Wall mounted (suffix W).

(2) - This boiler model available as Floor mounted (suffix F) only.

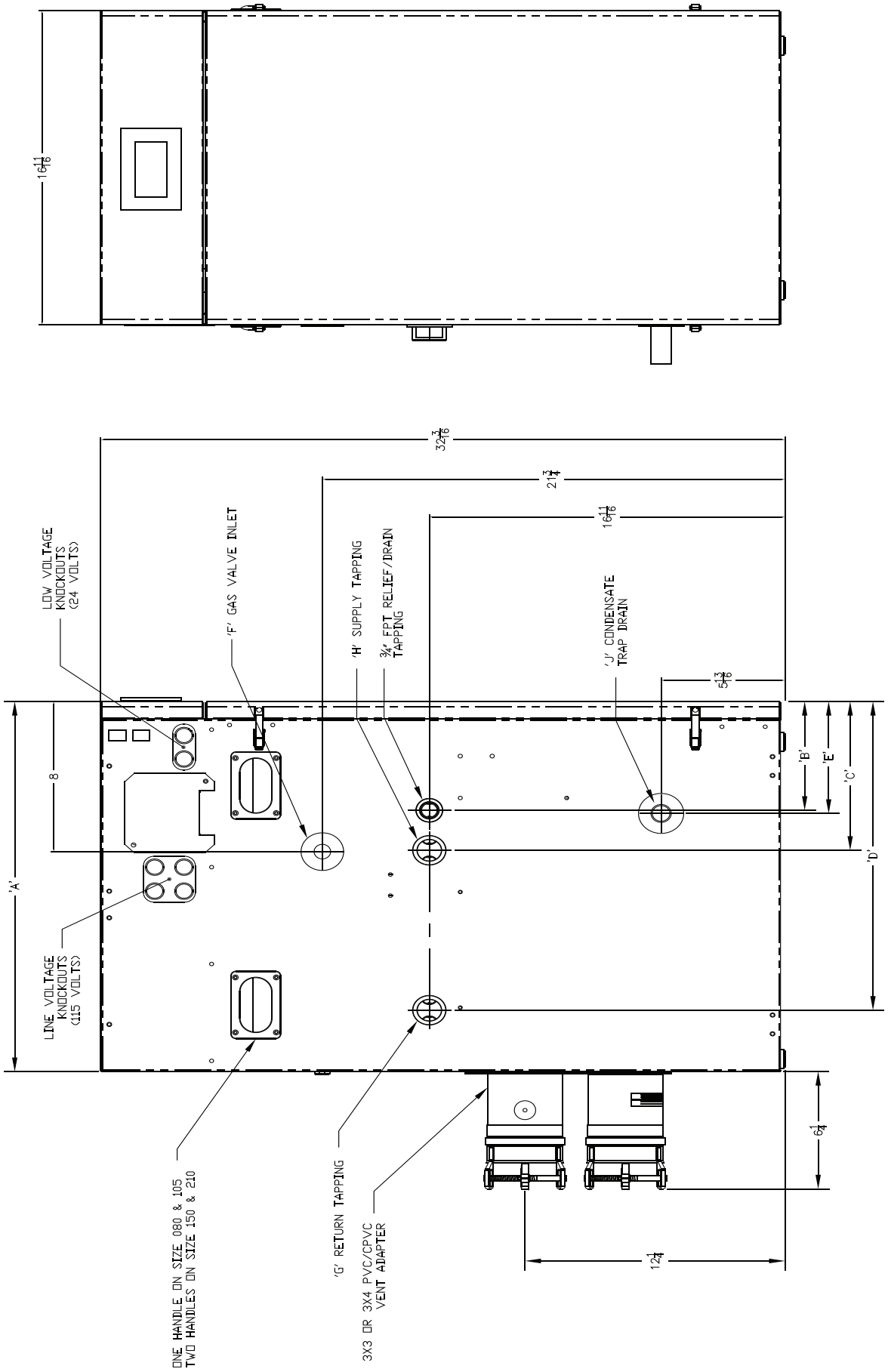

Figure 1A: Models ALP080B through ALP210B (Floor Mounted)

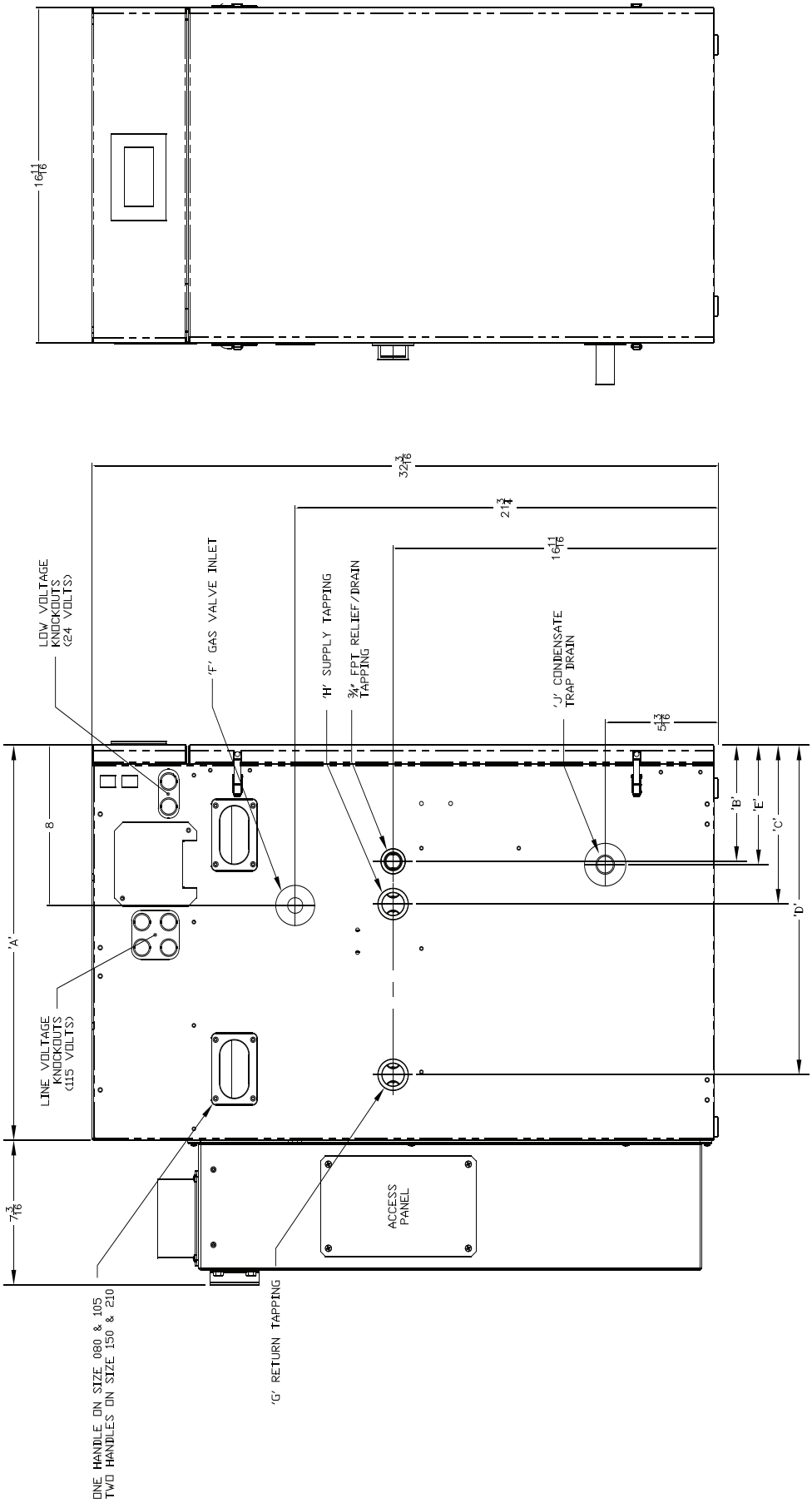

Figure 1B: Models ALP080B through ALP210B (Wall or Floor Mounted)

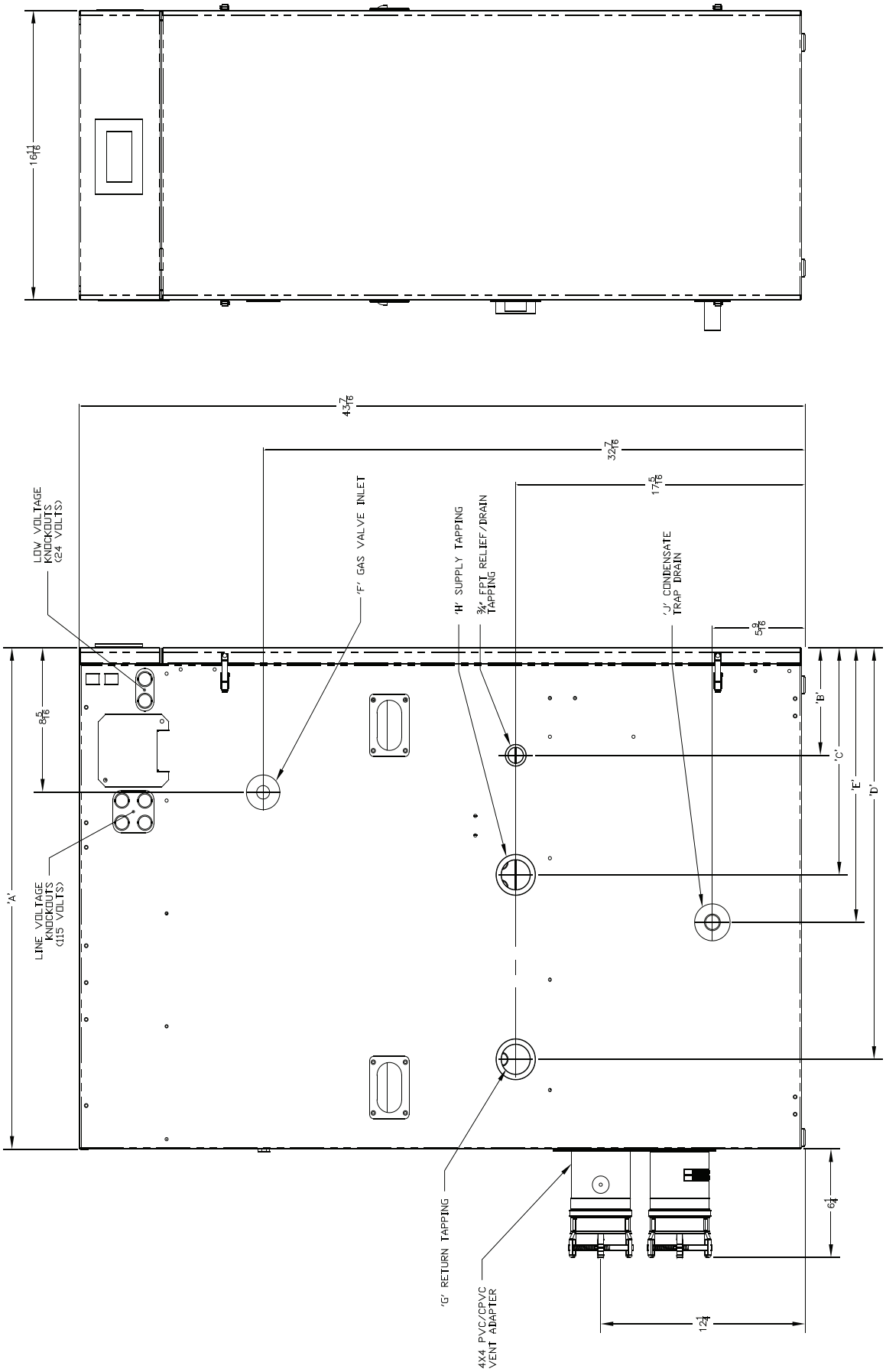

Figure 1C: Model ALP285B (Floor Mounted)

I. Product Description, Specifications and Dimensional Data (continued)

Table 2: Ratings

Alpine Series Gas-Fired Boilers					
Model Number	Input (MBH)		Heating Capacity (MBH)	Net AHRI Ratings Water [1] (MBH)	AFUE (%)
	Min.	Max.			
ALP080B	16	80	72	63	95.0
ALP105B	21	105	96	83	95.0
ALP150B	30	150	136	118	95.0
ALP210B	42	210	194	169	95.0
ALP285B	57	285	262	228	95.0

Ratings shown are for installations at sea level and elevations up to 2000 ft. For elevations above 2000 ft., the boiler will naturally derate by 2.5% for each 1000 ft. above sea level - applicable to ALP080B thru ALP210B.

ALP285B rating is for installation at sea level and elevations up to 7800 ft. For elevations above 7800 ft., the boiler will naturally derate by 1.8% for each 1000 ft. above sea level.

[1] Net AHRI Water Ratings based on piping and pickup allowance of 1.15. Consult manufacturer before selecting boiler for installations having unusual piping and pickup requirements, such as intermittent system operation, extensive piping systems, etc.

II. Unpacking Boiler

CAUTION **Do not drop boiler.**

A. **Move boiler** to approximate installed position.

B. **Remove all** crate fasteners.

C. **Lift and remove** outside container.

D. **Remove boiler** from cardboard positioning sleeve on shipping skid.

WARNING **Installation of this boiler should be undertaken only by trained and skilled personnel from a qualified service agency.**

E. **Move boiler** to its permanent location.

WARNING **Explosion Hazard. Asphyxiation Hazard. Electrical Shock Hazard. Installation of this boiler should be undertaken only by trained and skilled personnel from a qualified service agency. Follow these instructions exactly.**

Improper installation, adjustment, service, or maintenance can cause property damage, personal injury or loss of life.

NOTICE **Due to the low water content of the boiler, mis-sizing of the boiler with regard to the heating system load will result in excessive boiler cycling and accelerated component failure. U.S. Boiler Company DOES NOT warrant failures caused by mis-sized boiler applications. DO NOT oversize the boiler to the system. Multiple boiler installations greatly reduce the likelihood of boiler oversizing.**

WARNING **Asphyxiation Hazard. Models with Two-Pipe Vent Connector:**

Apply supplied dielectric grease to gasket inside vent section of two-pipe vent connector. Failure to apply the grease could result in flue gas leaks from gasket rupture during vent pipe installation or gasket deterioration due to condensate exposure.

A. **Installation must conform** to the requirements of the authority having jurisdiction in or, in the absence of such requirements, to the *National Fuel Gas Code, ANSI Z223.1/NFPA 54, and/or Natural Gas and Propane Installation Code*, CAN/CSA B149.1.
Where required by the authority having jurisdiction, the installation must conform to the *Standard for Controls and Safety Devices for Automatically Fired Boilers*, ANSI/ASME CSD1.

B. **Boiler is certified for installation** on combustible flooring. Do not install boiler on carpeting.

C. **Provide clearance** between boiler jacket and combustible material in accordance with local fire ordinance. Refer to Figure 2A or 2B for minimum listed clearances from combustible material. Recommended service clearance is 24 in. (610 mm) from left side, front, top and rear of the boiler. Recommended front clearance may be reduced to the combustible material clearance providing:

1. **Access to boiler front** is provided through a door or removable front access panel.
2. **Access is provided to the condensate trap** located underneath the heat exchanger.
3. **Access is provided to thermal link** located at boiler rear.

D. **Protect gas ignition system components** from water (dripping, spraying, rain, etc.) during boiler operation and service (circulator replacement, condensate trap, control replacement, etc.).

E. **Provide combustion and ventilation air** in accordance with section "Air for Combustion and Ventilation," of *National Fuel Gas Code,* ANSI Z223.1/NFPA 54, or Clause 8.2, 8.3, or 8.4 of *Natural Gas and Propane Installation Code,* CAN/CSA B149.1, or applicable provisions of local building Codes.

WARNING **Indicates a potentially hazardous situation which, if not avoided, could result in death, serious injury or substantial property damage.**

F. **The boiler should be located** so as to minimize the length of the vent system. The combustion air piping must terminate where outdoor air is available for combustion and away from areas that may contaminate combustion air. In particular, avoid areas near chemical products containing chlorines, chlorofluorocarbons, paint removers, cleaning solvents and detergents. Avoid areas containing saw dust, loose insulation fibers, dry wall dust etc.

NOTICE **Avoid operating this boiler in an environment where sawdust, loose insulation fibers, dry wall dust, etc. are present. If boiler is operated under these conditions, the burner interior and ports must be cleaned and inspected daily to insure proper operation.**

G. **General**

1. **Alpine boilers are intended for installations** in an area with a floor drain or in a suitable drain pan to prevent any leaks or relief valve discharge to cause property damage.
2. **Alpine boilers are not intended** to support external piping and venting. All external piping and venting must be supported independently of the boiler.
3. **Alpine boilers must be installed level** to prevent condensate from backing up inside the boiler.
4. **Alpine boilers can be installed** either as floor standing (ALP080B through ALP285B) or as wall hung (ALP080B through ALP210B).

Factory assembled floor standing models are identified with suffix F in a boiler part number code (example _ ALP210BF-4G02). Factory assembled wall hung models are identified with suffix W in a boiler part number code (example - ALP210BW-4G02).

5. **Boiler Floor Standing Installation**:
   a. For basement installation provide a solid base such as concrete, where floor is not level or water may be encountered on the floor around boiler.

      Floor must be able to support weight of boiler, water and all additional system components.
   b. Boiler must be level to prevent condensate from backing up inside the boiler.
   c. Provide adequate space for condensate piping or a condensate pump if required.

Boiler Clearances to Combustible (and Non-Combustible) Material:

Models ALP080B through ALP210B and ALP285B:

These boilers are listed for closet installation with the following minimum clearances – Top = 1 in. (25 mm), Front = 1 in. (25 mm), Left Side = 10 in. (250 mm), Right Side = 2 in. (50 mm), Rear = *6 in. (150 mm)

*** Note:**

When boiler is vented vertically, the minimum clearance from the rear of the jacket is increased to 18 in. (460 mm) with a short radius 90° elbow in order to provide adequate space at boiler rear for installation of vent and air intake piping and service access.

Boiler Service Clearances – Applicable to all Boiler Models:

Top = 24 in. (610 mm), Front = 24 in. (610 mm), Left Side = 24 in. (610 mm), Right Side = 24 in. (610 mm), Rear = 24 in. (610 mm)

The above clearances are recommended for service access but may be reduced to the Combustible Material Clearances provided:

Listed Direct Vent System	Vent Pipe Material	Vent Pipe Direction	Enclosure	Vent Pipe Nominal Diameter	Minimum Clearance to Combustible Material
Factory Standard Two-Pipe CPVC/PVC Vent and PVC Combustion Air Intake	* CPVC/PVC	Vertical or Horizontal	Unenclosed at all Sides	3 in. (80 mm) or 4 in. (100 mm)	1 in. (25 mm)
Available Optional Two-Pipe Rigid Polypropylene Vent (or, Flexible Polypropylene Liner for Vertical Venting only) and Rigid Polypropylene or PVC Combustion Air Intake	Pipe Rigid Polypropylene Vent (or, Flexible Polypropylene Liner for Vertical Venting only)			3 in. (80 mm) or (110 mm) or 4 in. (100 mm) or (110 mm)	1 in. (25 mm)
Available Optional Two-Pipe Stainless Steel Vent and Galvanized Steel or PVC Combustion Air Intake	Stainless Steel			3 in. (80 mm) or 4 in. (100 mm)	1 in. (25 mm)

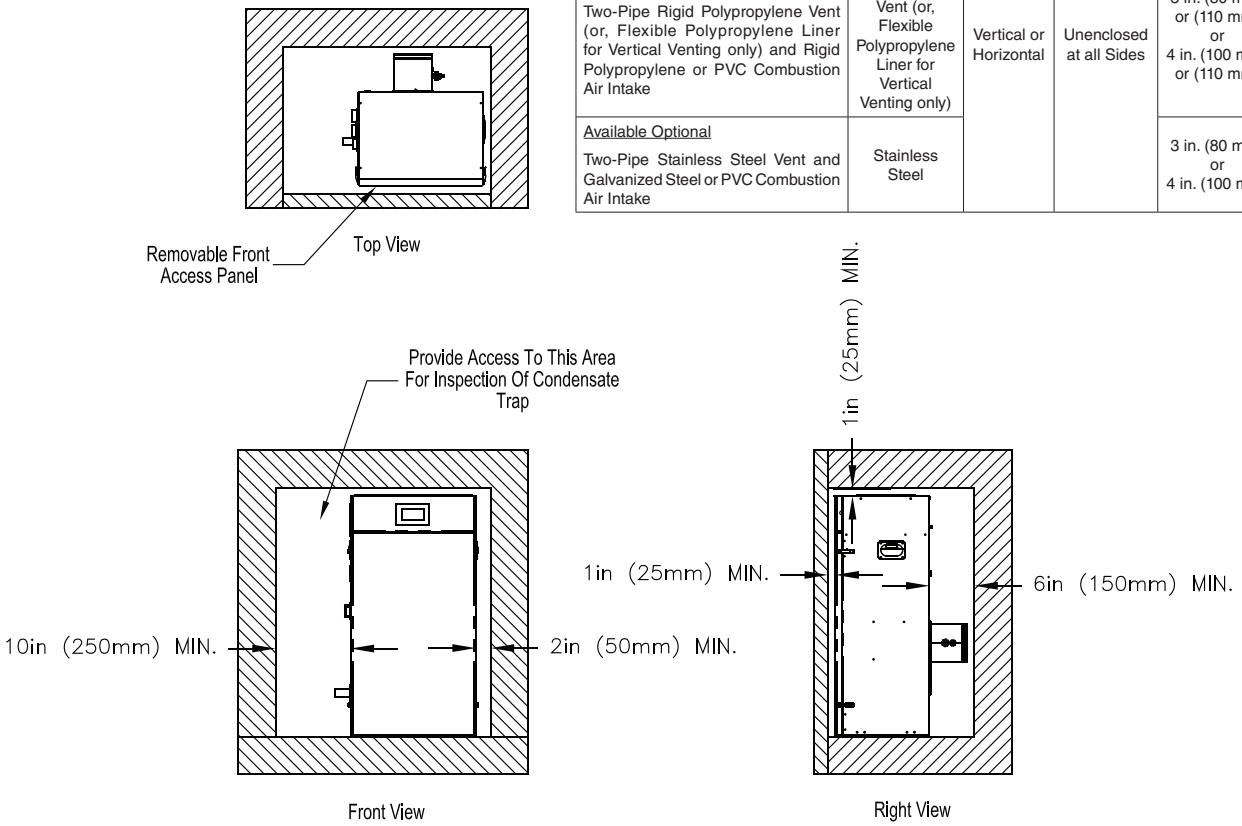

Figure 2A: Clearances To Combustible and Non-combustible Material, Floor Standing

a. The boiler front is accessible through a door.

b. Access is provided to the condensate trap located on the left side of boiler.

c. Access is provided to thermal link located at the boiler rear (ALP285B only).

6. Boiler Wall Hung Installation:

a. If the boiler is installed on a framed wall, minimum acceptable framing is 2 x 4 studs on 16” centers. The boiler mounting holes are on 16” centers for installation between two studs at the standard spacing. In cases where the boiler cannot be centered between the studs, or where the studs are spaced closer than 16” apart, the boiler may be anchored to ¾” plywood or horizontal 2 x 4’s anchored to the studs.

b. Locate Wall Mounting Bracket Kit carton (P/N 102988-01) enclosed inside boiler carton. The kit contains Wall Mounting Bracket, Bottom Securing Bracket, (4) 5/16” x 2” long hex head lag screws, (4) 5/16” flat plated washers and (2) #8 x ½” Phillips round head sheet metal screws.

CAUTION **Alpine boiler approximate dry weights:**

ALP080BW – 98 lbs; ALP105BW – 112 lbs; ALP150BW – 136 lbs: ALP210BW – 150 lbs

Two people are required to safely lift these boilers onto the installed wall mounting bracket.

Make sure that wall mounting bracket is anchored to a structure capable of supporting the weight of the boiler and attached piping when filled with water. Jurisdictions in areas subject to earthquakes may have special requirements for supporting these boilers. Such local requirements take precedence over the requirements shown below.

c. 5/16 in. x 2 in. lag screws and 5/16 in. plated washers are intended for mounting the boiler directly onto studs covered with ½ in. drywall. When the boiler is attached to other types of construction, such as masonry, use fasteners capable of supporting the weight of the boiler and attached piping in accordance with good construction practice and applicable local codes.

Clearances to combustible & non-combustible construction:

This boiler is approved for closet installation with the following clearances: Top = 1" (25mm), Front = 1" (25mm), Left Side = 10" (250mm), Right Side = 2" (50mm), Rear = 1" (25mm).

Recommended service clearances: Top = 24" (600mm), Front = 24" (600mm), Left Side = 24" (600mm)

These service clearances are recommended, but may be reduced to the combustible clearances provided:
1. Access to the front of the boiler is provided through a door.
2. Access is provided to the condensate trap drain connection located on the left side of the boiler.

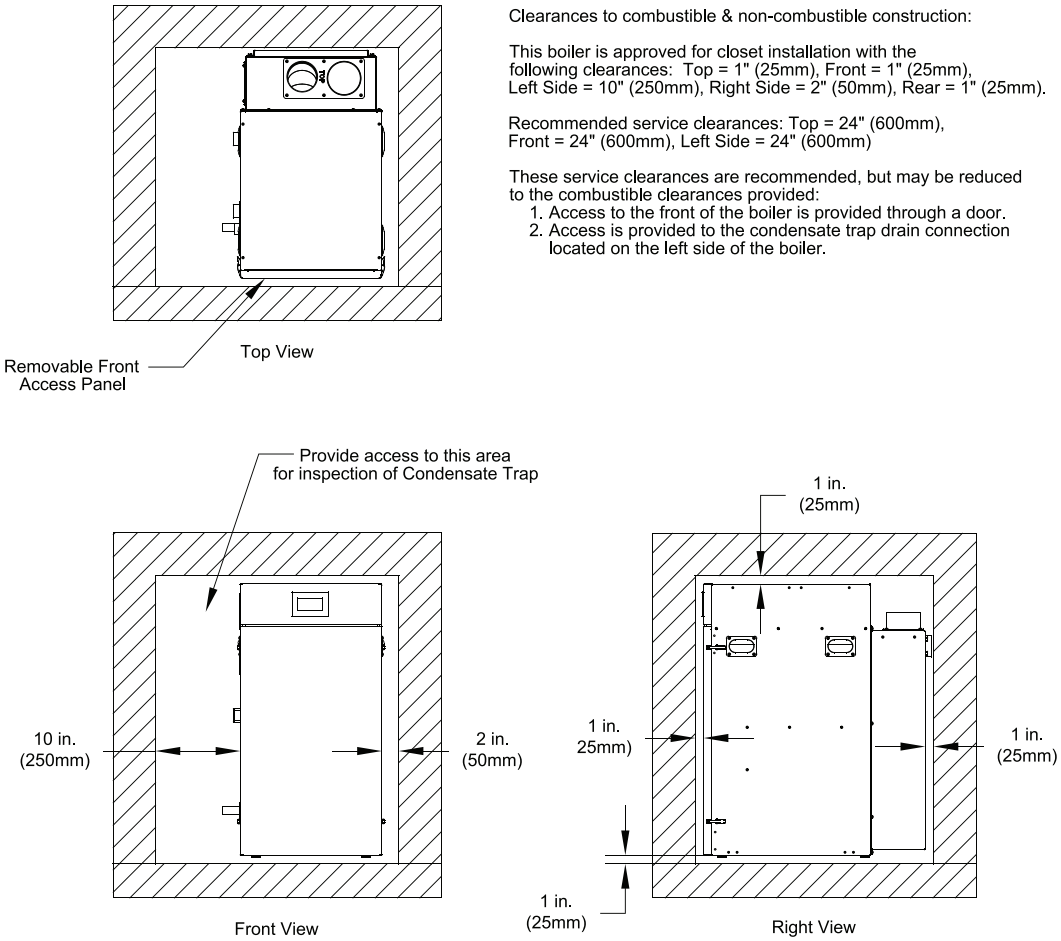

Figure 2B: Clearances To Combustible and Non-combustible Material, Wall Mounted

d. Make sure that the surface to which the boiler is mounted is plumb.

e. Before mounting the boiler, make sure that wall selected does not have any framing or other construction that will interfere with the vent pipe penetration.

f. Once a suitable location has been selected for the boiler, and any needed modifications have been made to the wall, use Figure 2C to locate and layout holes “A” and “B”. These holes must be positioned on mounting stud centers if the boiler is installed on a framed wall. Make sure that the horizontal centerline of these holes is level. Holes “C” and “D” may also be drilled at this time, or after the boiler is hung on the wall. If the 5/16 x 2 in. lag screws are used, drill 3/16 in. pilot holes.

g. An alternate way to locate/mark holes “A” and “B” is to use template P/N 102986-01 enclosed into Vent Part Carton [P/N 102981-01 (ALP080BW/105BW) or P/N 102981-02 (ALP150BW/210W)], which can be found inside boiler carton.

h. Attach the wall hanging bracket using the 5/16 in. x 2 in. lag screws and 5/16 in. plated washers, or other suitable anchors as appropriate (Figure 2D). Make sure the bracket is level.

i. Attach Bottom Securing Bracket to boiler air box with two #8 x ½ in. Phillips round head sheet metal screws. Refer to Figure 2D for details.

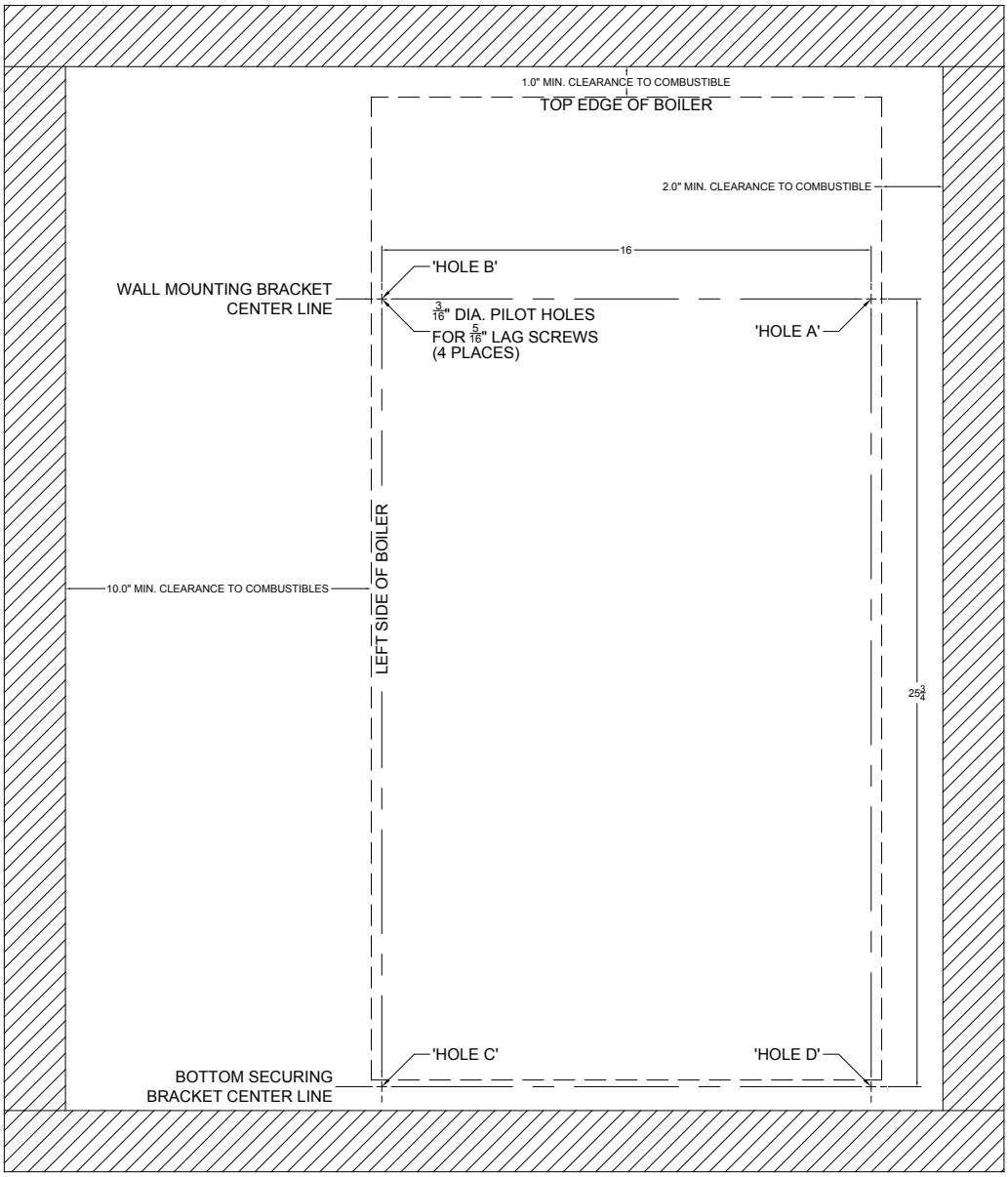

Figure 2C: Wall Mounting Hole Location / Layout

⚠ CAUTION The outer edges of the template represent minimum side, top and bottom clearances to combustible material. If the template needs to be cut to fit into a selected location, it would indicate the minimum clearances to combustible material are not met.

j. Hang the boiler on the installed wall bracket as shown in Figure 2D.

k. If not already done in Step (4) locate and drill holes “C” and “D” using the ob-round slots in the Bottom Securing Bracket. Secure the Bracket to the wall using the 5/16 in. x 2 in. lag screws and 5/16 in. plated washers, or other fasteners as appropriate (Figure 2D).

l. Verify that the front of the boiler is plumb. If it is not, install shims (installer provided) at holes “C” and “D” between the Bottom Securing Bracket and the wall to adjust.

⚠ CAUTION When positioning the template in the desired location on the wall insure that *the minimum clearances to combustible material* at adjacent walls and ceiling are maintained. Consult Figures 2A through 2C in this manual. Be sure to allow space at the boiler left side for gas and water connections, as well as for access to the condensate trap and boiler controls for servicing.

m. See Section IV Venting; Paragraph B, 4 “Field Installation of CPVC Vent Pipe - Wall Mounted Boiler Builds” for instructions on attaching the vent system to the boiler.

⚠ WARNING Vent pipe must be inserted firmly into vent connector and secured by tightening the metal strap worm screw.

n. After the boiler has been piped, wired, connected to vent and combustion air system piping and combustion performance testing completed per Section IX “System Start-up”, install Access Panel/Gasket assembly and secure with provided four #8 x ½ in. black oxide Phillips head sheet metal screws. See Figure 2E “Access Panel and Gasket Installation”.

⚠ WARNING Vent pipe must be inserted firmly into vent connector and secured by tightening the metal strap worm screw.

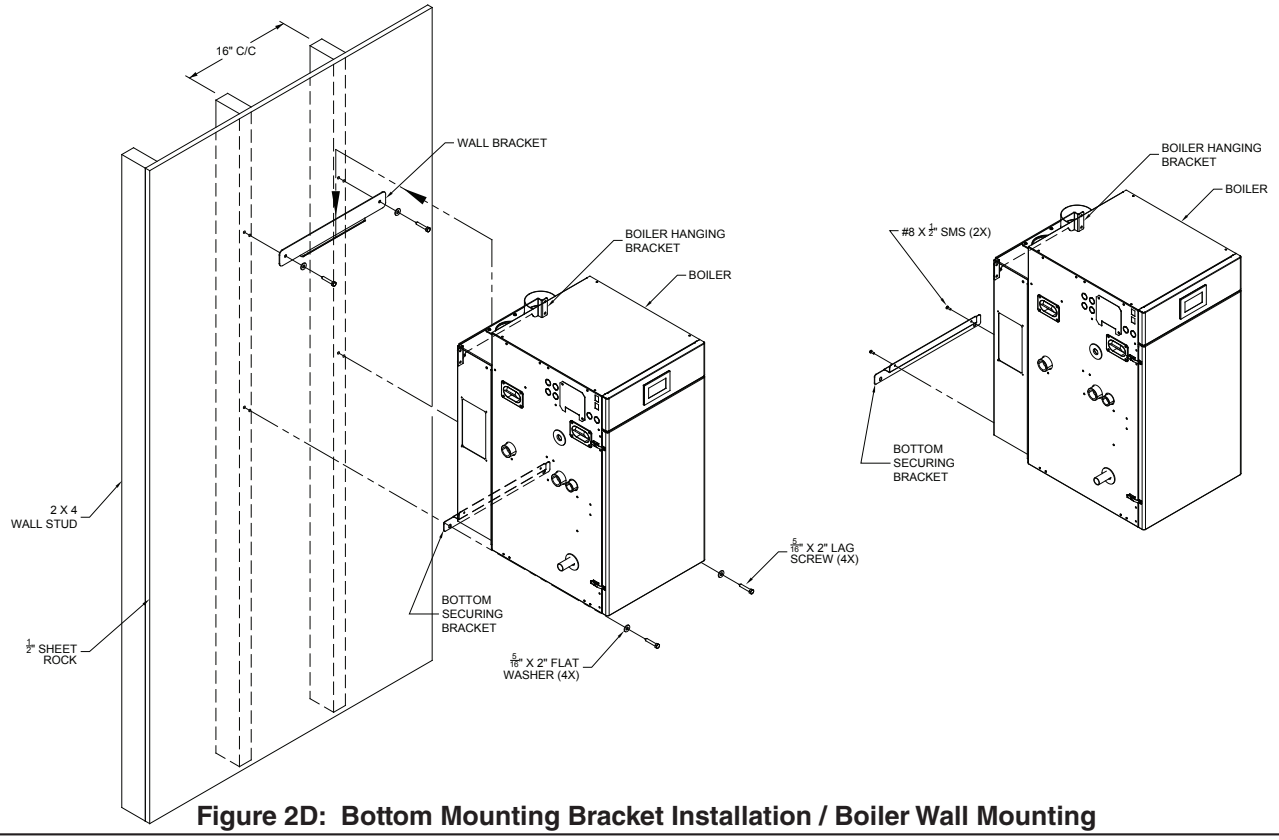

Figure 2D: Bottom Mounting Bracket Installation / Boiler Wall Mounting

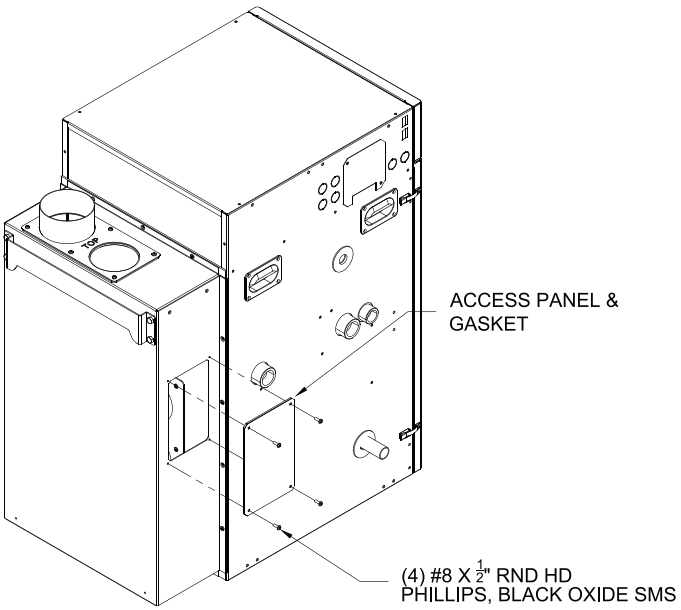

Figure 2E: Access Panel and Gasket Installation

H. Boiler Stacking

1. **For installations with unusually high space heating** and/or domestic hot water heating loads, where employing two (2) Alpine boilers will offer the benefits of greater operational efficiency, floor space savings and boiler redundancy, the Alpine boilers may be installed stacked one on the top of the other. Refer to Table 3 "Alpine Boiler Model Stacking Combinations" for details.

Table 3: Alpine Boiler Model Stacking Combinations

Bottom Boiler Model	Top Boiler Model (2)
ALP080B (1)	ALP080B
ALP105B (1)	ALP080B or ALP105B
ALP150B (1)	ALP080B through ALP150B
ALP210B (1)	ALP080B through ALP210B
ALP285B	ALP080B, ALP105B, ALP150B & ALP285B

Notes: (1) Floor-mounted builds only
(2) Floor-mounted or wall-mounted build where applicable

2. **To field assemble individual Alpine boilers into a stackable configuration,** use the steps below:
   a. Position the bottom boiler first. Refer to Sections II "Unpacking Boiler" and III "Pre-Installation & Boiler Mounting" of the manual for details. **Always position higher input boiler model as bottom boiler**.
   b. Each Alpine boiler is factory packaged with two (2) Stacking Boiler Attachment Brackets (P/N 101679-01) and the bracket mounting hardware [six (6) self-drilling hex washer head plated #8 x ½" long screws, P/N 80860743]. Locate and remove the brackets and the hardware. The Stacking Boiler Attachments Bracket has three 7/32" diameter holes punched in a triangular pattern. See Figure 3 "Stacking Boiler Attachment Bracket Placement".
   c. Alpine boiler left and right side panels have a series of dimples at panel top and bottom. These dimples are positioning dimples for Stacking Boiler Attachment Bracket mounting screws. Side panel bottom positioning dimples are evenly spaced from boiler front and back, while side panel top positioning dimples follow specific pattern to compensate for Alpine boiler model variable depth.
   d. Position the upper boiler on the top of the bottom boiler and align boiler front doors and sides flush with each other.
      - Place first Stacking Boiler Attachment Bracket onto the upper boiler left side panel, at the panel lower left corner and align bracket two upper holes with corresponding side panel lower dimples.
      - The remaining lower bracket hole must align with a matching bottom boiler left side panel top positioning dimple.
      - Once bracket holes and side panel dimple alignment is verified, attach the bracket to top and bottom boiler left side panels with the mounting screws.
   e. Repeat above procedure to install second Stacking Boiler Attachment Bracket and secure the stacked boiler right side panels together at the front right corner.
   f. Install the third Stacking Boiler Attachment Bracket to secure top and bottom boiler left side panels at the rear left corner. Align the bracket holes with corresponding positioning dimples in the top boiler and bottom boiler left side panels, then secure bracket with the screws.
   g. Repeat above procedure to install the forth Stacking Boiler Attachment Bracket to secure stacked boiler right side panels at the rear right corner.
3. **When installing stackable boiler combinations observe the following guidelines:**
   a. Venting - Top and bottom boilers must have their individual vent piping and vent terminals.

WARNING **Asphyxiation Hazard. No common manifold venting is permitted. Each boiler must have its own individual vent and combustion air pipes and terminals.**

For side-wall venting individual model vent terminals must terminate not closer than 12 inches horizontally and three (3) feet vertically from each other in order to prevent combustion air contamination. For vertical through the roof venting, individual vertical vent terminals, if level with each other, must be spaced no closer than 12 inches horizontally. If vertical terminals cannot end in one plane, they must be spaced no closer than three (3) feet horizontally.

If vertical vent terminals cannot end in one plane, they must be spaced no closer then three (3) feet horizontally.

Follow instructions in Section IV "Venting" of the manual for specifics of individual boiler vent termination. Follow instructions in Section V "Condensate Disposal" for each individual boiler flue gas condensate line construction and condensate disposal. Terminating individual boiler condensate lines into common pipe prior to drain disposal is permissible, providing common pipe has sufficient flow capacity to handle combined condensate volume of stackable combination.

b. Gas Piping - Follow instructions in Section VII "Gas Piping" of the manual for sizing and installation of an individual boiler. When common gas piping is sized, insure it will have **adequate capacity for combined input (CFH gas flow) of the selected stackable boiler combination.**

c. Water Piping and Trim - Follow instructions in Section VI "Water Piping and Trim" of the manual for system piping and boiler secondary piping selection/sizing based on **combined heating capacity and/or gross output of the selected stackable boiler combination**. Follow instructions of Section VI "Water Piping and Trim" for each individual boiler trim installation.

d. Electrical - Follow instructions in Section VIII "Electrical" of the manual to wire individual boilers.

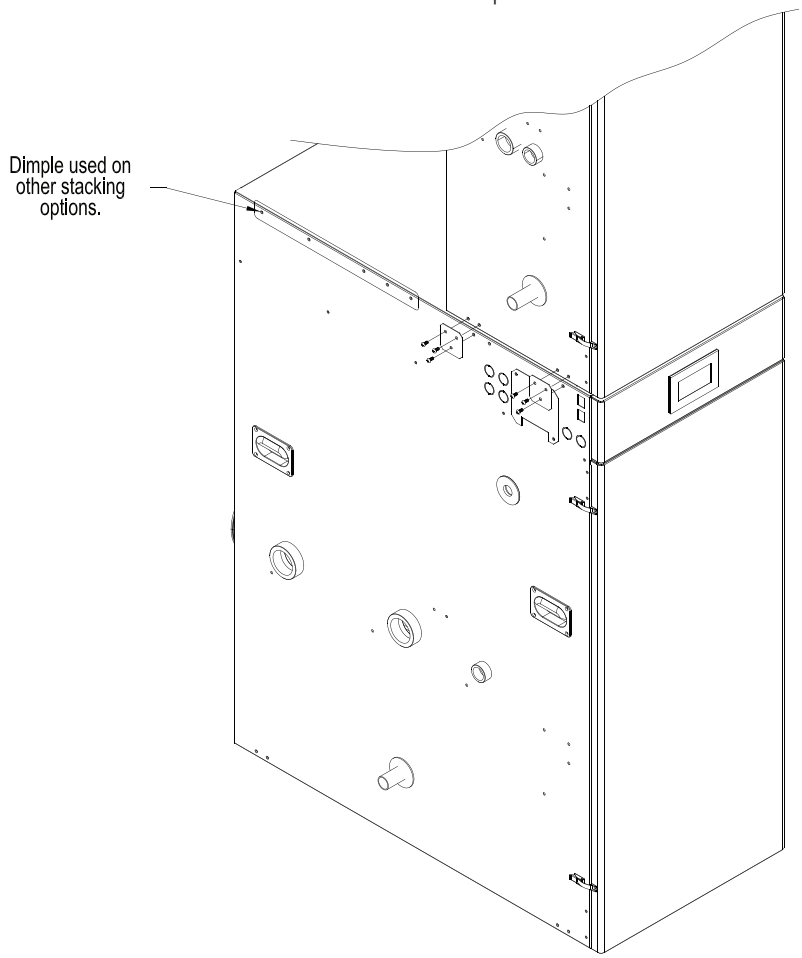

Figure 3: Stacking Boiler Attachment Bracket Placement

WARNING **Asphyxiation Hazard. Failure to vent this boiler in accordance with these instructions could cause products of combustion to enter the building resulting in severe property damage, personal injury or death.**

- **Do not use a barometric damper, draft hood or vent damper with this boiler.**
- **Do not locate vent termination under a deck.**
- **Do not locate vent termination where exposed to prevailing winds.**
- **Do not locate combustion air termination where chlorines, chlorofluorocarbons (CFC's), petroleum distillates, detergents, volatile vapors or other chemicals are present. Severe boiler corrosion and failure will result.**
- **Use outdoor air for combustion. Do not obtain combustion air from within the building.**
- **Use specified vent and combustion air pipe diameters. Do not reduce specified diameters of vent and combustion air piping.**
- **Do not interchange vent systems or materials unless otherwise specified.**
- **Do not apply thermal insulation to vent pipe or fittings.**
- **Moisture and ice may form on surface around vent termination. To prevent deterioration, surface must be in good repair (sealed, painted, etc.).**
- **Do not allow low spots in the vent where condensate may pool.**
- **The CPVC vent materials supplied with this boiler do not comply with *Natural Gas and Propane Installation Code*, CAN/CSA B149.1.S1-07 and are not approved for use in Canadian jurisdictions that require vent systems be listed to ULC S636-2008. In these jurisdictions, vent this boiler using either stainless steel Special Gas vent or a listed ULC S636 Class IIB venting system.**

DISTANCE BELOW UNVENTILATED SOFFIT	DISTANCE BELOW VENTILATED SOFFIT	OVERHANG (FT)			
		0FT – 1FT	1FT – 2FT	2FT – 3FT	3FT – 4FT
		MINIMUM DISTANCE FROM WALL 'X' (INCHES)			
1FT – 2FT	–	12"	17"	–	–
2FT – 3FT	2FT – 3FT	12"	12"	–	–
3FT – 4FT	3FT – 4FT	12"	12"	15"	–
4FT – 5FT	4FT – 5FT	12"	12"	12"	20"
OVER 5FT	OVER 5FT	12"	12"	12"	12"

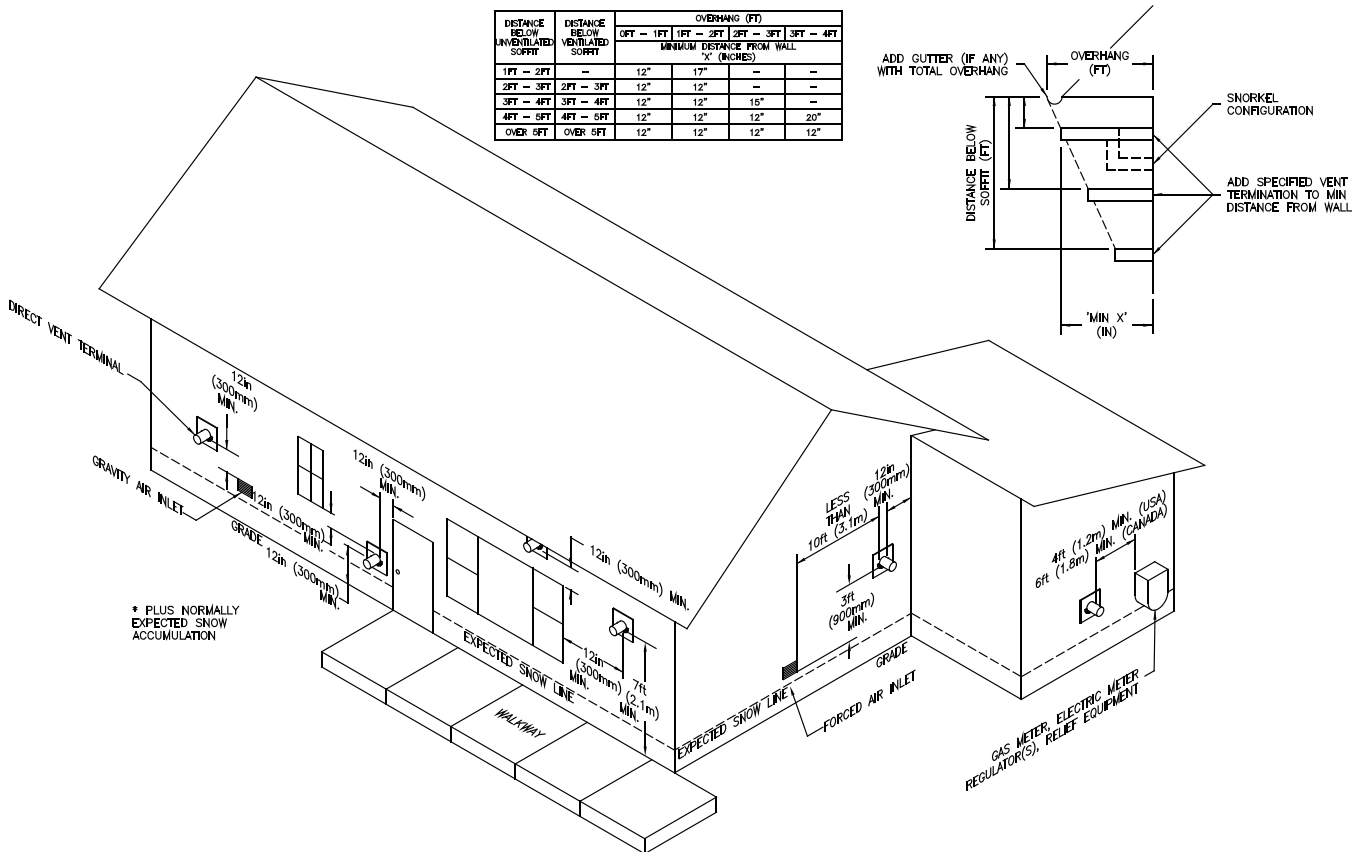

Figure 4: Location of Vent Terminal Relative to Windows, Doors, Grades, Overhangs, Meters and Forced Air Inlets - Two-Pipe System Vent Terminal (Shown) Two-Pipe System Air Intake Terminal (Not Shown)

A. General Guidelines

1. Listed Vent/Combustion Air Systems

a. Install vent system in accordance with "Venting of Equipment" of the *National Fuel Gas Code*, ANSI Z223.1/NFPA 54 or "Venting Systems and Air Supply for Appliances" of the *Natural Gas and Propane Installation Code*, CAN/CSA B149.1, or applicable provisions of local building codes. Contact local building or fire officials about restrictions and installation inspection in your area.

b. The Alpine is a Direct Vent (sealed combustion) boiler. Install vent system in accordance to these instructions. Combustion air must be supplied directly to the burner enclosure from outdoors and flue gases must be vented directly outdoors.

c. The following combustion air/vent system options are listed for use with the Alpine boilers (refer to Table 4):

i. Two-Pipe CPVC/PVC Vent/Combustion Air System - Separate CPVC/PVC pipe serves to expel products of combustion and separate PVC pipe delivers fresh outdoor combustion air. Refer to Part B for specific details.

ii. Two-Pipe Polypropylene Vent/Combustion Air System - Separate rigid or flexible polypropylene pipe serves to expel products of combustion and separate rigid polypropylene or PVC pipe delivers fresh outdoor combustion air. Refer to Part C for specific details.

iii. Two-Pipe Stainless Steel Vent/Combustion Air System - Separate stainless steel pipe serves to expel products of combustion and separate PVC or galvanized steel pipe delivers fresh outdoor combustion air. Refer to Part D for specific details.

d. Vent connectors serving appliances vented by natural draft shall not be connected into any portion of mechanical draft systems under positive pressure.

2. Vent/Combustion Air Piping

a. Do not exceed maximum vent/combustion air lengths listed in Table 5A. Vent/combustion air length restrictions are based on equivalent length of vent/combustion air pipe (total length of straight pipe plus equivalent length of fittings). Table 6A lists equivalent lengths for fittings. Do not include vent/combustion air terminals in equivalent feet calculations. Use vent/combustion air equivalent length worksheet provided in Table 6B.

b. Maintain minimum clearance to combustible materials. See Figure 2A or 2B for details.

c. Enclose vent passing through occupied or unoccupied spaces above boiler with material having a fire resistance rating at least equal to the rating of adjoining floor or ceiling.

Note: For one or two family dwellings, fire resistance rating requirement may not need to be met, but is recommended.

d. Slope horizontal vent pipe minimum 1/4 in/ft (21 mm/m) downward towards the boiler.

Les chaudières de catégories I, II et IV doivent présenter des tronçons horizontaux dont la pente montante est d'au moins 1/4 po par pied (21 mm/m) entre la chaudière et l'évent.

e. If possible, slope horizontal combustion air pipe minimum 1/4 in/ft (21 mm/m) downward towards terminal. If not, slope towards boiler.

f. Use noncombustible ¾ in. pipe strap to support horizontal runs and maintain vent location and slope while preventing sags in pipe. Do not restrict thermal expansion or movement of vent system. Maximum support spacing is 4 ft. (1.2 m). Avoid low spots where condensate may pool. Do not penetrate any part of the vent system with fasteners.

Les instructions d´installation du système d´évacuation doivent préciser que les sections horizontales doivent être supportées pour prévenir le fléchissement. Les méthodes et les intervalles de support doivent être spécifiés. Les instructions divent aussi indiquer les renseignements suivants:les chaudières de catégories II et IV doivent être installées de façon à empêcher l´accumulation de condensat: et si nécessaire, les chaudières de catégories II et IV doivent être pourvues de dispositifs d´évacuation du condensat.

g. For multiple boiler installations with vertical roof terminals, separate vent pipes from multiple boilers may be piped through a common conduit or chase so that one roof penetration may be made.

3. Vent/Combustion Air Terminals

Install venting system components on exterior of building only as specifically required by these instructions (refer to Figure 4).

a. Use only listed vent/combustion air terminals.
   - *i.* Horizontal Sidewall Venting: For models ALP080B thru ALP285B, use coupling for vent terminal and 90° elbow for combustion air intake terminal as shown in Figure 5). Alternate staggered and snorkel terminations are shown in Figure 6A and Figure 6B.
   - *ii.* Vertical Roof Venting: Use straight coupling on vent and two 90° elbows turned downwards for combustion air as shown in Figure 7A. and Figure 8).
   - *iii.* For Alpine boilers factory build prior to January 2016, US Boiler provided PVC tees (3" or 4" as applicable to specific boiler model) to be used either as vent or air intake terminals.

     For Alpine boilers factory build after January 2016, US Boiler provides PVC coupling (2", 3" or 4" as applicable to specific boiler model) to be used as vent terminal and PVC 90° elbow (2", 3" or 4" as applicable to specific boiler model) to be used as air intake terminal.

     Both above listed combinations of vent/air intake terminations are approved/permissible to use per Intertek Alpine Listing Report No. 3132672CRT-04.

b. Maintain correct clearance and orientation between vent and combustion air terminals.
   - *i.* Space center lines of vent and combustion air terminals minimum 12 in. (300 mm) apart. Spacing of more than 12 in. (300 mm) is recommended.
   - *ii.* If possible, locate vent and combustion air terminals on the same wall to prevent nuisance shutdowns. If not, boiler may be installed with roof vent terminal and sidewall combustion air terminal.
   - *iii.* When installed on the same wall, locate vent terminal at same height or higher than combustion air terminal.
   - *iv.* When using tee terminals, do not locate vent terminal directly above air intake as dripping condensate may freeze on and block intake.

c. Locate bottom of vent and combustion air terminals at least 12 in. (300 mm) [18 in. (460 mm) in Canada] above the normal snow line and at least 12 in. (300 mm) above grade level.

d. Locate vent and combustion air terminals at least 12 in. (300 mm) from any door, window, or gravity inlet into the building.

e. Do not install vent terminal directly above windows or doors.

f. Locate bottom of vent terminal at least 3 ft. (900 mm) above any forced air inlet located within 10 ft. (3.0 m).

g. If window and/or air inlet is within 4 ft. (1.2 m) of an inside corner, maintain at least 6 ft. (1.8 m) spacing between terminal and adjoining wall of inside corner.

h. Locate bottom of vent terminal at least 7 ft. (2.1 m) above a public walkway.

i. Maintain minimum clearance of at least 4 ft. (1.22 m) [6 ft. (1.83 m) in Canada] horizontally from, and in no case above or below electric meters, gas meters, regulators, and relief equipment.

j. Do not locate the vent terminal under decks or similar structures.

k. Top terminal must be at least 24 in. (609.6 mm) below ventilated eves, soffits and other overhangs. In no case may the overhang exceed 48 in. (1219.2 mm). Where permitted by the authority having jurisdiction and local experience, the terminal may be located closer to unventilated soffits. The minimum vertical separation depends upon the depth of the soffit. See Figure 4 for details.

l. Maintain minimum 12 in. (300 mm) horizontal spacing between vent terminal and a building corner.

m. Under certain conditions, water in the flue gas may condense, and possibly freeze, on objects around the terminal including on the structure itself. If these objects are subject to damage by flue gas condensate, they should be moved or protected.

n. If possible, install the vent and combustion air terminals on a wall away from the prevailing wind. Reliable operation of this boiler cannot be guaranteed if terminals are subjected to winds in excess of 40 mph (64 km/hr).

o. Do not locate combustion air terminal in areas that might contain combustion air contaminates, such as near swimming pools.

p. For multiple boiler installations with horizontal wall terminals, maintain minimum 12 in. (300 mm) horizontal distance between adjacent boiler vent terminals. Maintaining greater spacing is recommended to avoid frost damage to building surfaces where vent terminations are placed.

q. For multiple boiler installations with vertical roof terminals, maintain minimum 12 in. (300 mm) horizontal distance between adjacent boiler vent terminals.

Table 4: Vent/Combustion Air Intake System Options

Vent & Intake Materials	Option		Penetration Through Structure	Termination	Figures	Component Table	Reference Section
Standard CPVC/PVC Two-Pipe, CPVC/PVC Vent and PVC Air Intake	1	Intake	Horizontal Sidewall	90° Elbow w/ Screen	5, 6A, 6B	7A, 7B	A.B
		Vent	Horizontal Sidewall	Coupling w/ Screen			
	2	Intake	Horizontal Sidewall	Ipex Low Profile	6D, 6E	7D	
		Vent	Horizontal Sidewall				
	3	Intake	Horizontal Sidewall	Ipex FGV Concentric	6G, 6H, 6J	7F	
		Vent	Horizontal Sidewall				
	4	Intake	Horizontal Sidewall	DiversiTech (HVENT)	6D, 6F	7E	
		Vent	Horizontal Sidewall				
	5	Intake	Horizontal Sidewall	DiversiTech (CVENT) Concentric	6G, 6H, 6J	7G	
		Vent	Horizontal Sidewall				
	6	Intake	Horizontal Sidewall	90° Elbow w/ Screen	6C	7A, 7B	
		Vent	Vertical Roof	Coupling w/ Screen			
	7	Intake	Vertical Roof	(2) 90° Elbows w/ Screen	7A, 8	7C	
		Vent	Vertical Roof	Coupling w/ Screen			
	8	Intake	Vertical Roof	Ipex FGV Concentric	7B, 6H	7F	
		Vent	Vertical Roof				
	9	Intake	Vertical Roof	DiversiTech (CVENT) Concentric	7C, 6H	7G	
		Vent	Vertical Roof				
Optional Polypropylene Two-pipe, Rigid PP Vent or Flexible PP Vent (Vertical Only) and Rigid PP or PVC Air Intake	10	Intake	Horizontal Sidewall	UV Resistant 90° Elbow w/Screen	5, 6A, 6B	8, 9A, 9B, 9C, 9D	A, C
		Vent	Horizontal Sidewall	UV Resistant Straight Pipe w/Screen			
	11	Intake	Horizontal Sidewall	UV Resistant 90° Elbow w/Screen	6C		
		Vent	Vertical Roof	UV Resistant Straight Pipe w/Screen			
	12	Intake	Vertical Roof	(2) UV Resistant 90° Elbows w/Screen	7A, 8		
		Vent	Vertical Roof	UV Resistant Straight Pipe w/Screen			
	13	Intake	Horizontal Sidewall	UV Resistant 90° Elbow w/Screen	16A, 16B		
		Vent	Vertical Roof	Polypropylene Flex Terminal (B-vent Chase used for vent only)			
	14	Intake	Vertical Roof	Polypropylene Flex Terminal (B-vent Chase used for vent and air intake)	16D, 16E		
		Vent	Vertical Roof				
Optional Stainless Steel Two-pipe, SS Vent and Galvanized Steel or PVC Air Intake	15	Intake	Horizontal Sidewall	90° Elbow w/Screen	5, 6A, 6B	10A, 10B	A, D
		Vent	Horizontal Sidewall	Straight Termination w/Screen			
	16	Intake	Horizontal Sidewall	90° Elbow w/Screen	6C		
		Vent	Vertical Roof	Straight Termination w/Screen			
	17	Intake	Vertical Roof	(2) 90° Elbows w/Screen	7A, 8		
		Vent	Vertical Roof	Straight Termination w/Screen			

Table 5A: Vent and Combustion Air Pipe Sizes and Equivalent Lengths (Applies to All Listed Vent/Combustion Air System Options)

Boiler Model	Option	Combustion Air Length			Vent Length		
		Pipe Dia., in. (mm)	Min., ft. (m)	Max., ft. (m)	Pipe Dia., in. (mm)	Min., ft. (m)	Max., ft. (m)
ALP080B	Reduced Diameter	2 (60)	2.5 (0.76)	60 (18.3)	2 (60)	2.5 (0.76)	60 (18.3)
	Factory Build	3 (80)	2.5 (0.76)	135 (41.1)	3 (80)	2.5 (0.76	135 (41.1)
ALP105B	Reduced Diameter	2 (60)	2.5 (0.76)	60 (18.3)	2 (60)	2.5 (0.76)	60 (18.3)
	Factory Build	3 (80)	2.5 (0.76)	135 (41.1)	3 (80)	2.5 (0.76)	135 (41.1)
ALP150B	Factory Build	3 (80)	2.5 (0.76)	135 (41.1)	3 (80)	2.5 (0.76)	100 (30.5)
ALP210B	Factory Build	3 (80)	2.5 (0.76)	135 (41.1)	3 (80)	2.5 (0.76)	135 (41.1)
ALP285B	Reduced Diameter	3 (80)	2.5 (0.76)	60 (18.3)	3 (80)	2.5 (0.76)	60 (18.3)
	Factory Build	4 (100 or 110)	2.5 (0.76)	100 (30.5)	4 (100 or 110)	2.5 (0.76)	100 (30.5)

Notes:

❖ Applicable to ALP080B (W) and ALP105B (W) builds for reduced 2” vent/air intake diameter option (60’ max. equivalent vent length):
- Install factory provided 3” x 30” long pipe into vent elbow outlet inside air box assembly
- Mount installer provided 3” x 2” CPVC concentric reducing coupling or 3” x 2” PVC concentric reducing coupling, as applicable (see paragraph 6 ‘Horizontal Sidewall Termination’ and Figure 12 ‘Wall Penetration Clearances for PVC Pipe), in vertical position only, at pipe opposite end and install the balance of installer provided 2” CPVC or PVC vent piping and supplied vent termination (coupling) with screen.
- To transition from 3” factory air intake to 2” air intake, attach installer provided short piece of 3” PVC pipe to boiler air intake at air collar plate assembly.
- Mount installer provided 3” x 2” PVC concentric reducing coupling onto 3” PVC pipe and install the balance of installer provided 2” PVC air intake piping and supplied air intake termination (90° elbow) with screen.

❖ Applicable to ALP080B (F) and ALP105B (F) builds for reduced 2” vent/air intake diameter option (60’ max. equivalent vent length):
- Mount provided 3” x 30” long CPVC pipe and 3” 90° CPVC elbow into two-pipe vent/intake air system connector assembly vent connection
- Mount installer provided 3” x 2” CPVC concentric reducing coupling or 3” x 2” PVC concentric reducing coupling, as applicable (see paragraph 6 ‘Horizontal Sidewall Termination’ and Figure 12 ‘Wall Penetration Clearances for PVC Pipe), in vertical position only, at pipe opposite end and install the balance of installer provided 2” CPVC or PVC vent piping and supplied vent termination (coupling) with screen.
- Mount installer provided 3” PVC air intake pipe into two-pipe vent/intake air connector assembly air intake connection.
- Mount provided 3” x 2” PVC concentric reducing coupling at pipe opposite end and install the balance of installer provided 2” PVC air intake piping and supplied air intake termination (90° elbow) with screen.

❖ Applicable to ALP285B build for reduced 3” vent/air intake diameter option (60’ max. equivalent vent length):
- Mount provided 4” x 30” long CPVC pipe into two-pipe vent/intake air system connector assembly vent connection and secure with built-in worm-drive clamp. The pipe may be cut to suit installation.
- Install 4” 90° CPVC elbow at the opposite end of the pipe. The elbow may be installed between pipe two cut pieces.
- Mount installer provided 4” x 3” CPVC concentric reducing coupling or 4” x 3” PVC concentric reducing coupling, as applicable (see paragraph 6 ‘Horizontal Sidewall Termination’ and Figure 12 ‘Wall Penetration Clearances for PVC Pipe), in vertical position only, at vent pipe end. Proceed to install the balance of installer provided 3” CPVC or PVC vent piping and vent termination (coupling) with screen.
- Mount installer provided 4” PVC pipe into two-pipe vent/combustion air system connector assembly air intake connection and secure with built-in worm-drive clamp.
- Mount installer provided 4” x 3” PVC concentric reducing coupling at air intake pipe end.
- Install the balance of installer provided 3” PVC air intake piping and air intake termination (90° elbow) with screen.

Table 5B: Vent System and Combustion Air System Component Equivalent Length (Applies to All Listed Vent/Combustion Air System Options)

Component		Equivalent Length	
Nominal Diameter	**2 in. (60 mm)**	**3 in. (80 mm)**	**4 in. (100 mm or 110 mm)**
90° Elbow (Short Radius)	6.0 ft. (1.8 m)	10 ft. (3.0 m)	13 ft. (4.0 m)
90° Elbow, Long Sweep/Sanitary	2.6 ft. (0.79 m)	4.0 ft. (1.2 m)	9 ft. (2.7 m)
45° Elbow (Short Radius)	1.5 ft. (0.45 m)	3.0 ft. (0.9 m)	4.5 ft. (1.4 m)

Table 6: Vent/Combustion Air Equivalent Length Calculation Work Sheet

Component	Combustion Air						Vent					
	Equivalent Length Per Piece	X	Quantity	=	Subtotal Equivalent Length		Equivalent Length Per Piece	X	Quantity	=	Subtotal Equivalent Length	
Straight Pipe		X		=		A						E
90° Elbow, Short Radius		X		=		B						F
90° Elbow, Long Sweep/ Sanitary		X		=		C						G
45° Elbow		X		=		D						H
	Combustion Air Total Equivalent Length			=		A+B+C+D	Vent Total Equivalent Length			=		E+F+G+H

Notes:
1. Total equivalent length cannot exceed maximum equivalent length shown in Table 5A.
2. Use elbow equivalent lengths provided in Table 5B.
3. Combustion air and vent terminations do not count towards total equivalent length.
4. Pressure drop for flexible polypropylene liner is 20% greater than for rigid pipe. Multiply measured flexible polypropylene liner length by 1.2 to obtain equivalent length.
   Example
   Measured length = 35 ft.
   Equivalent length =35 ft. x 1.2 = 42 ft.
5. Maximum equivalent length of flexible polypropylene liner is 48 ft. (14.6 m).

B. CPVC/PVC Venting

WARNING **Asphyxiation Hazard. Failure to follow these instructions could cause products of combustion to enter the building, resulting in severe property damage, personal injury, or death.**

- **Use all CPVC vent components (supplied with boiler) for near-boiler vent piping before transitioning to Schedule 40 PVC pipe (ASTM 2665) components for remainder of vent system.**
- **Use CPVC vent components within any interior space where air cannot circulate freely, including through vertical or horizontal chase ways, inside a stud wall, in closets, and through wall penetrations.**
- **The use of cellular core PVC (ASTM F891), cellular core CPVC or Radel (polyphenolsulfone) is prohibited.**
- **All condensate that forms in the vent must be able to drain back to the boiler.**

NOTICE **Do not exceed maximum vent/combustion air system length. Refer to "2. Vent/Combustion Air Piping" under "A. General Guidelines" of this section for maximum vent/combustion air system length.**

Use only vent and combustion air terminals and terminal locations shown in "3. Vent/Combustion Air Terminals" under "A. General Guidelines" of this section.

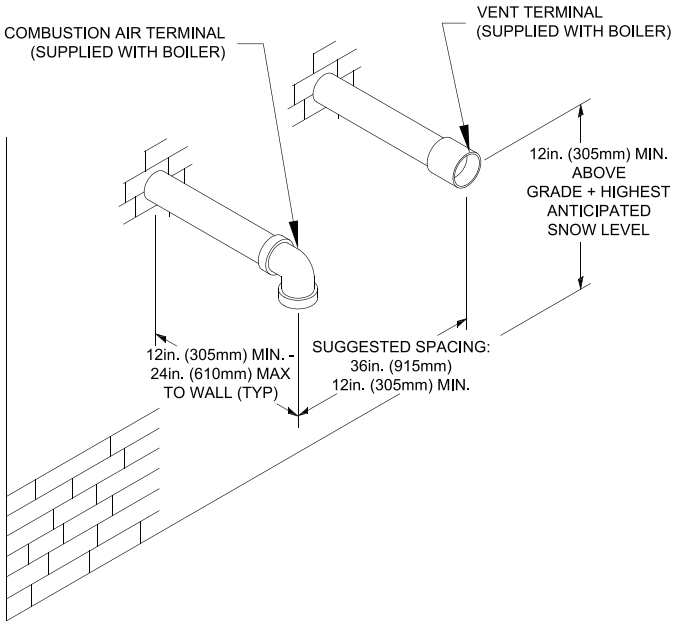

Figure 5: Direct Vent - Vent and Air Intake Horizontal Sidewall Terminations

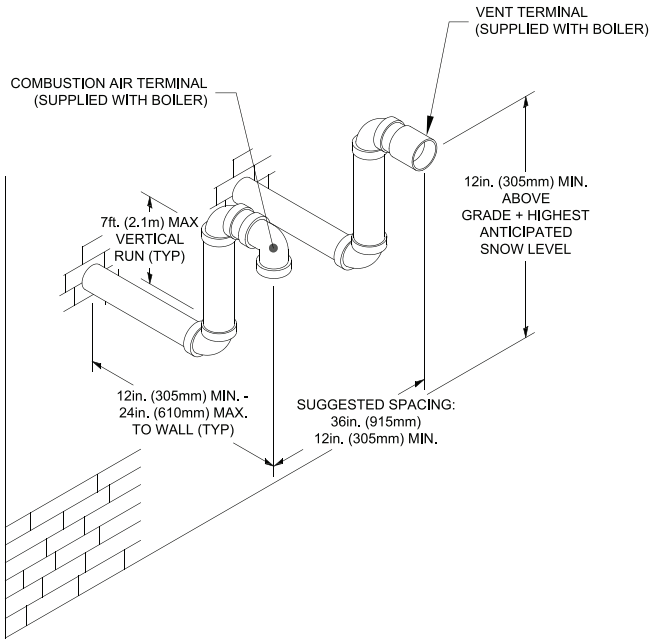

Figure 6B: Direct Vent - Snorkel Vent and Air Intake Horizontal Sidewall Terminations

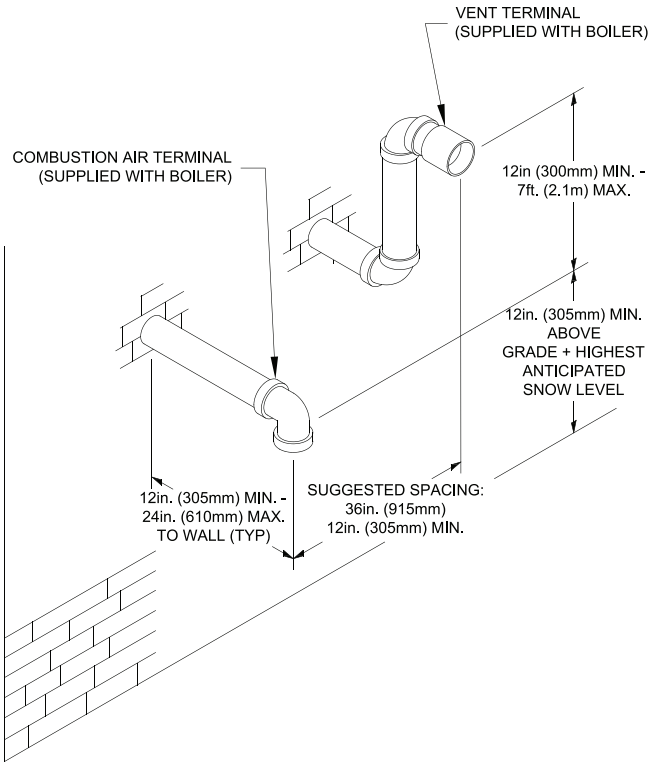

Figure 6A: Direct Vent - Staggered Vent and Air Intake Horizontal Sidewall Terminations

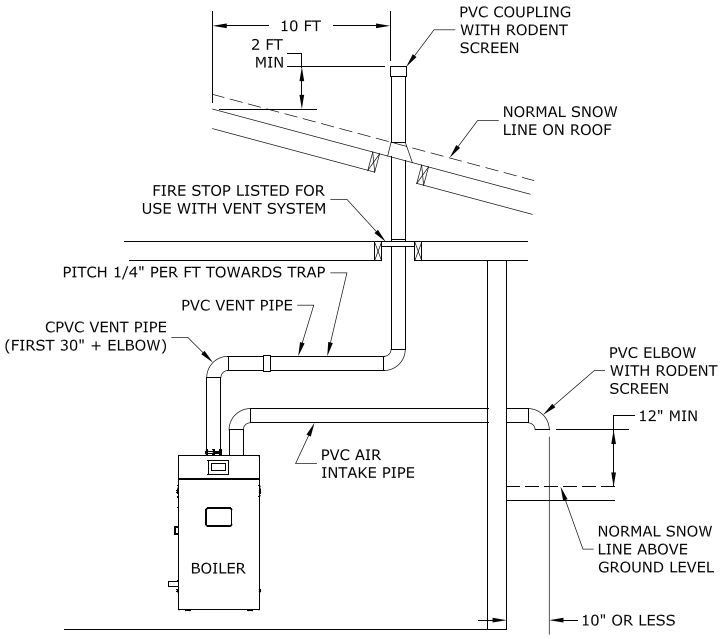

Figure 6C: Split Rigid Vent Option

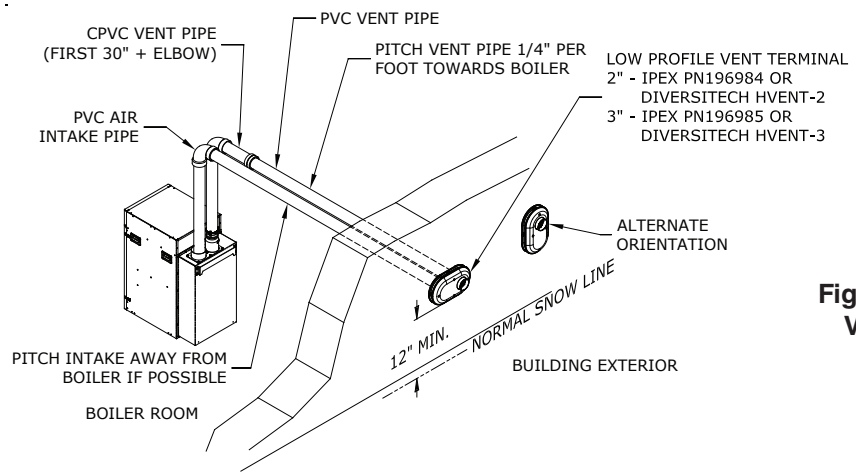

Figure 6D: Direct Vent - Horizontal Two-pipe Venting/Air Intake with IPEX Low Profile or DiversiTech HVENT Terminal

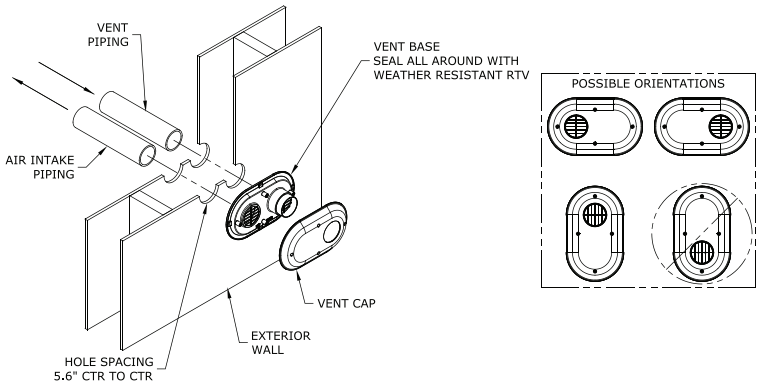

Figure 6E: Installation of IPEX Low Profile Terminal thru Sidewall

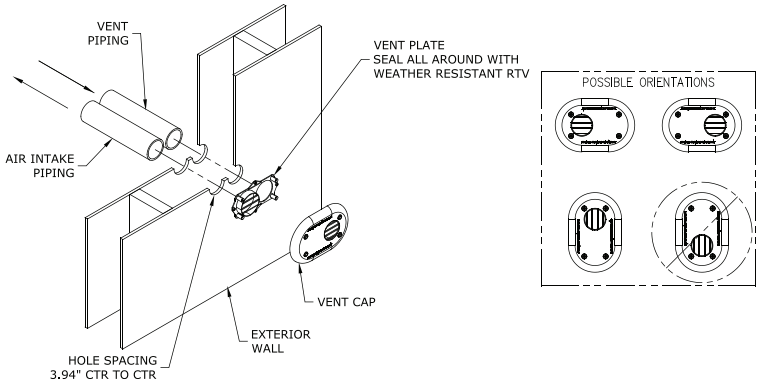

Figure 6F: Installation of DiversiTech HVENT Terminal thru Sidewall

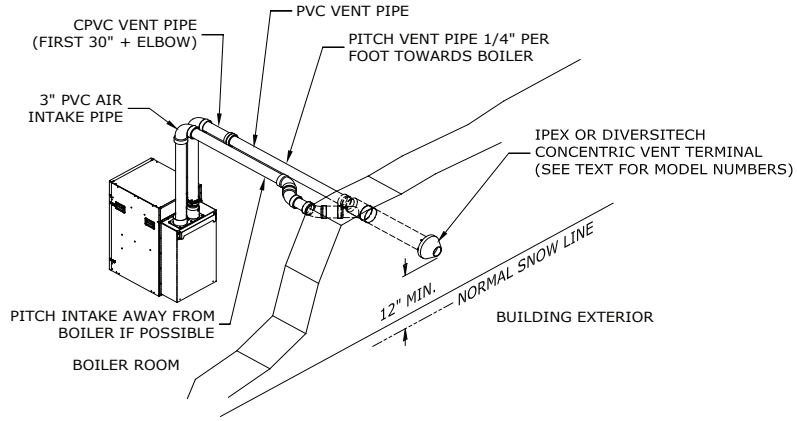

Figure 6G: Direct Vent - Horizontal Two-pipe Venting/Air Intake with IPEX FGV or DiversiTech CVENT Concentric Terminal

*OVERALL LENGTH OF INNER PIPE TO BE 'A' INCHES LONGER THAN OVERALL LENGTH OF OUTER PIPE.

KIT SIZE	*'A'	'B'	'C'	MANUFACTURER
2"	7-3/8"	1-3/4"	3-1/2"	IPEX
2"	12-3/16"	3/4"	3-1/2"	DIVERSITECH
3"	8-3/4"	2-1/4"	4-1/2"	IPEX
3"	13-3/16"	1"	4-1/2"	DIVERSITECH

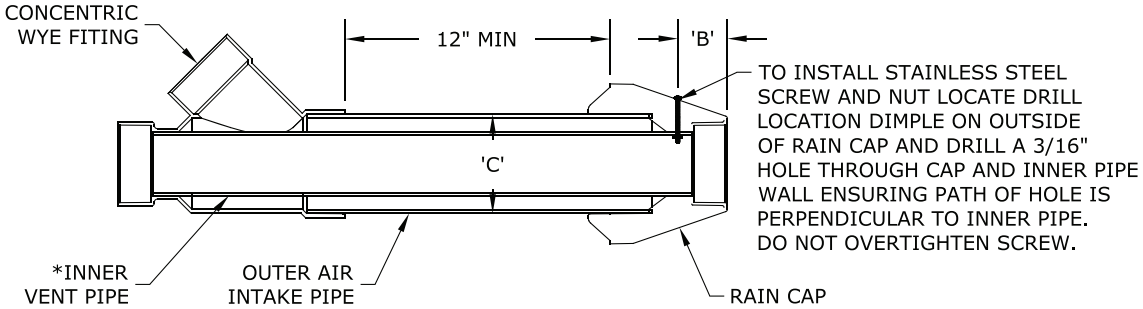

NOTES: 1. ALL CUTS MUST BE SQUARE AND DEBURRED.
2. LENGTHENING OF TERMINAL IS NOT PERMITTED.

Figure 6H: Cutting IPEX FGV or DiversiTech CVENT Concentric Terminal

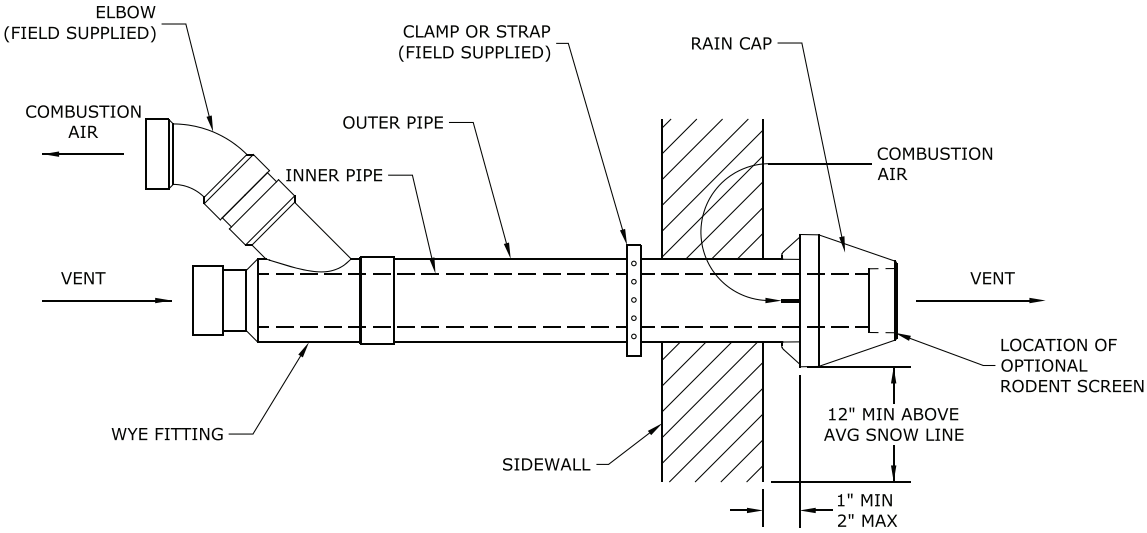

Figure 6J: Installation of IPEX FGV or DiversiTech CVENT Concentric Terminal thru Sidewall

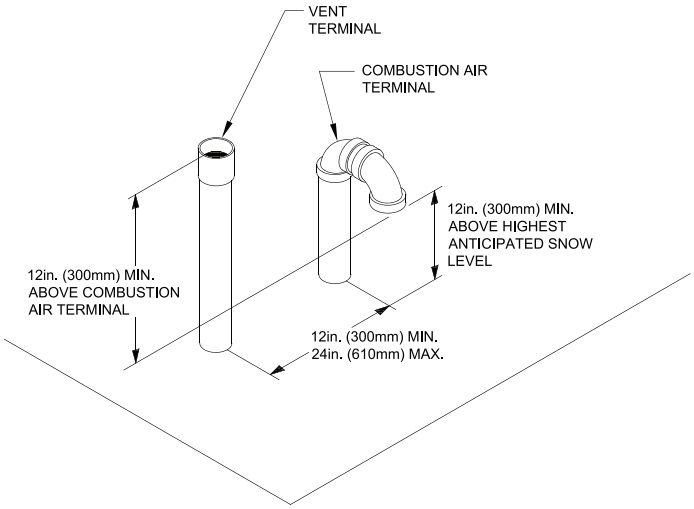

Figure 7A: Direct Vent - Vent and Air Intake Vertical Terminations with Flat Roof

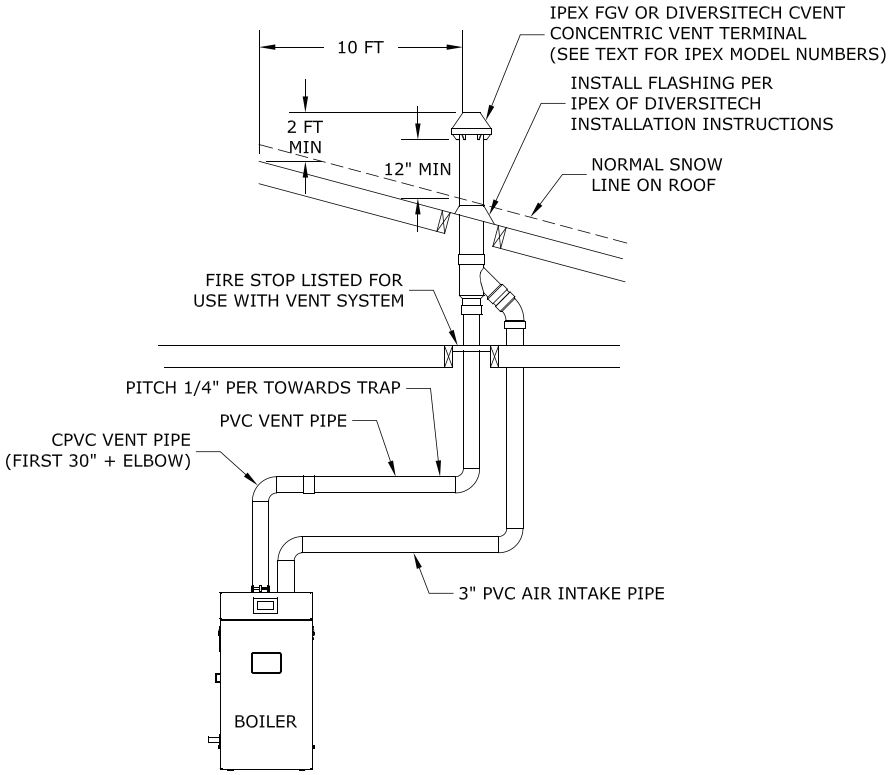

Figure 7B: Direct Vent - Vertical Two-Pipe Venting/Air Intake with IPEX FGV or DiversiTech CVENT Concentric Terminal

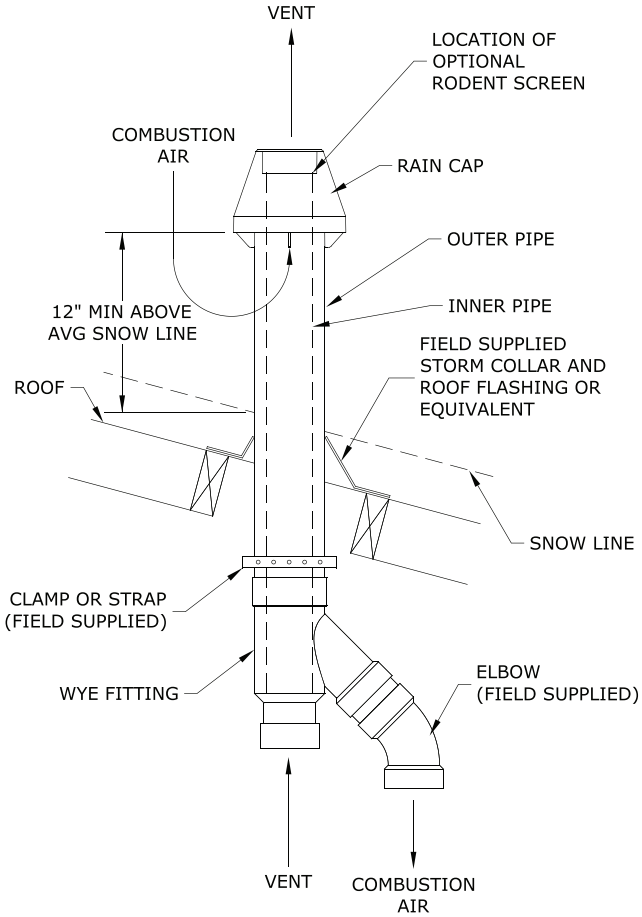

Figure 7C: Installation of IPEX FGV or DiversiTech CVENT Concentric Terminal thru Roof

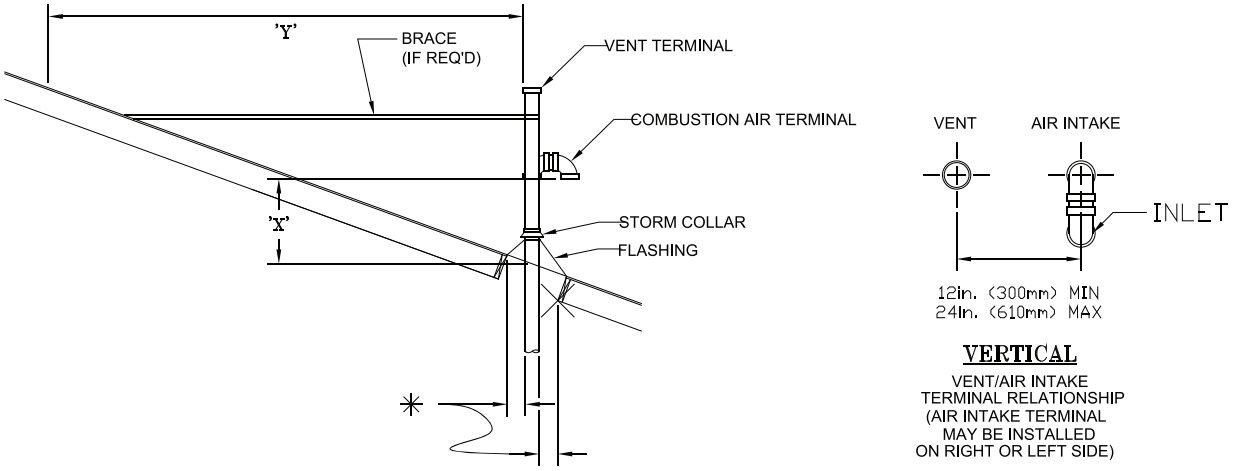

✳ VENT PIPE MINIMUM CLEARANCE TO COMBUSTIBLE MATERIAL IS 1in. (25mm). COMBUSTION AIR PIPE MINIMUM CLEARANCE TO COMBUSTIBLE MATERIAL IS ZERO.

Extend vent/combustion air piping to maintain minimum vertical ('X') and minimum horizontal ('Y') distance of 12 in. (300 mm) [18 in. (460 mm) Canada] from roof surface. Allow additional vertical ('X') distance for expected snow accumulation.

Figure 8: Direct Vent - Vent and Air Intake Vertical Terminations with Sloped Roof

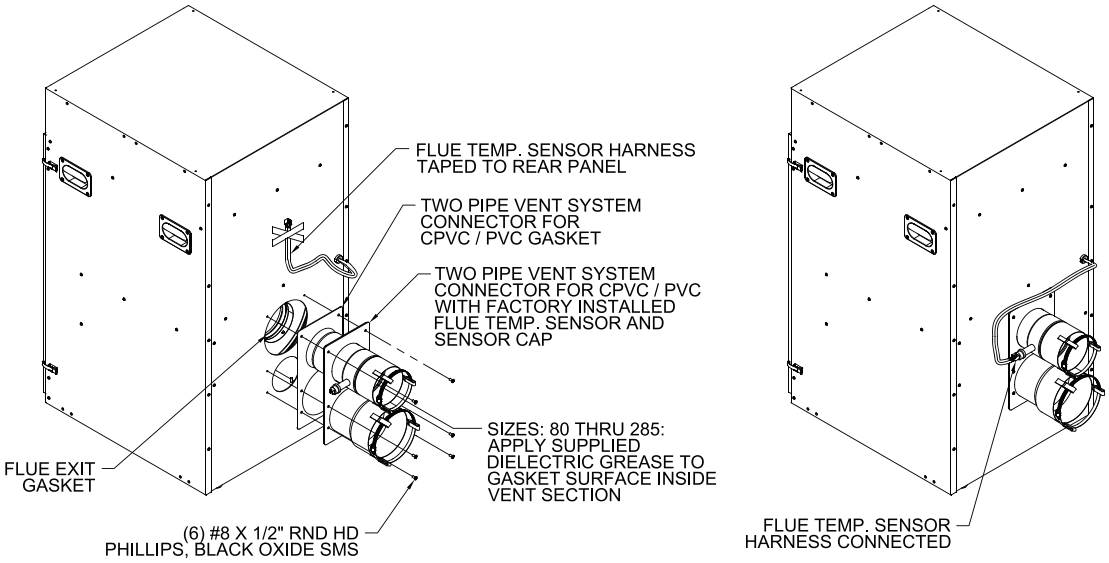

Figure 9: Field Installation of CPVC/PVC Two-Pipe Vent Connector with Factory Installed Flue Temperature Sensor and Sensor Cap - Floor Mounted Boiler Builds

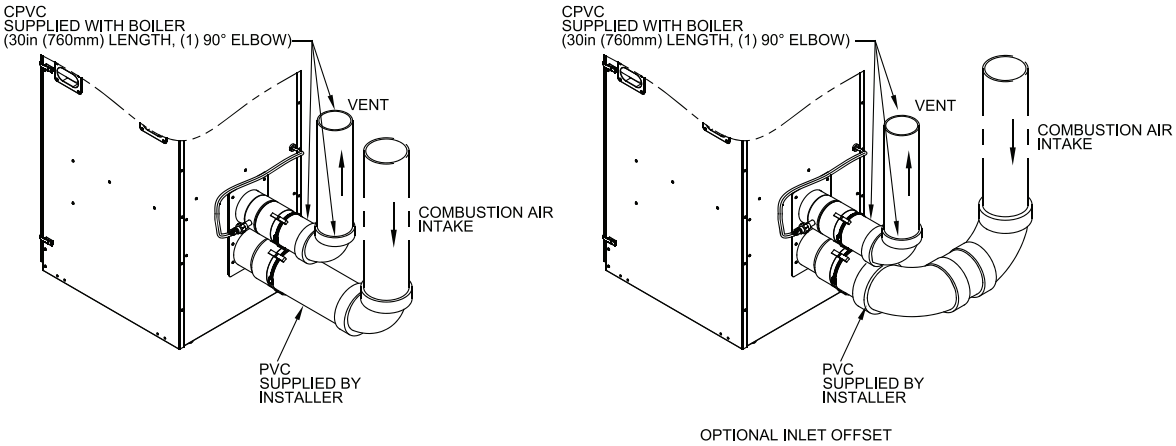

Figure 10A: Near-Boiler Vent/Combustion Air Piping - Floor Mounted Boiler Builds

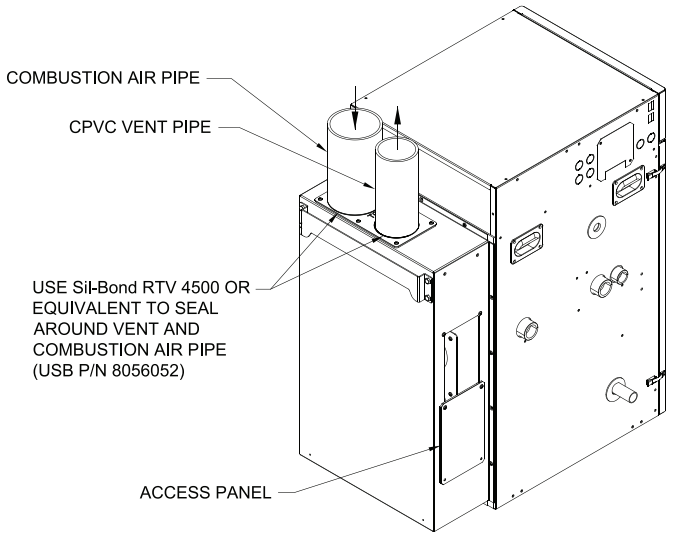

Figure 10B: Field Installation of CPVC Vent Pipe - Wall Mounted Boiler Builds

Table 6A: Expansion Loop Lengths

Nominal Pipe Dia. (In.)	Length of Straight Run (Ft.)	Loop Length "L" (In.)
2	20	44
	30	54
	40	62
	50	69
	60	76
3	20	53
	30	65
	40	75
	50	84
	60	92
4	20	60
	30	74
	40	85
	50	95
	60	104

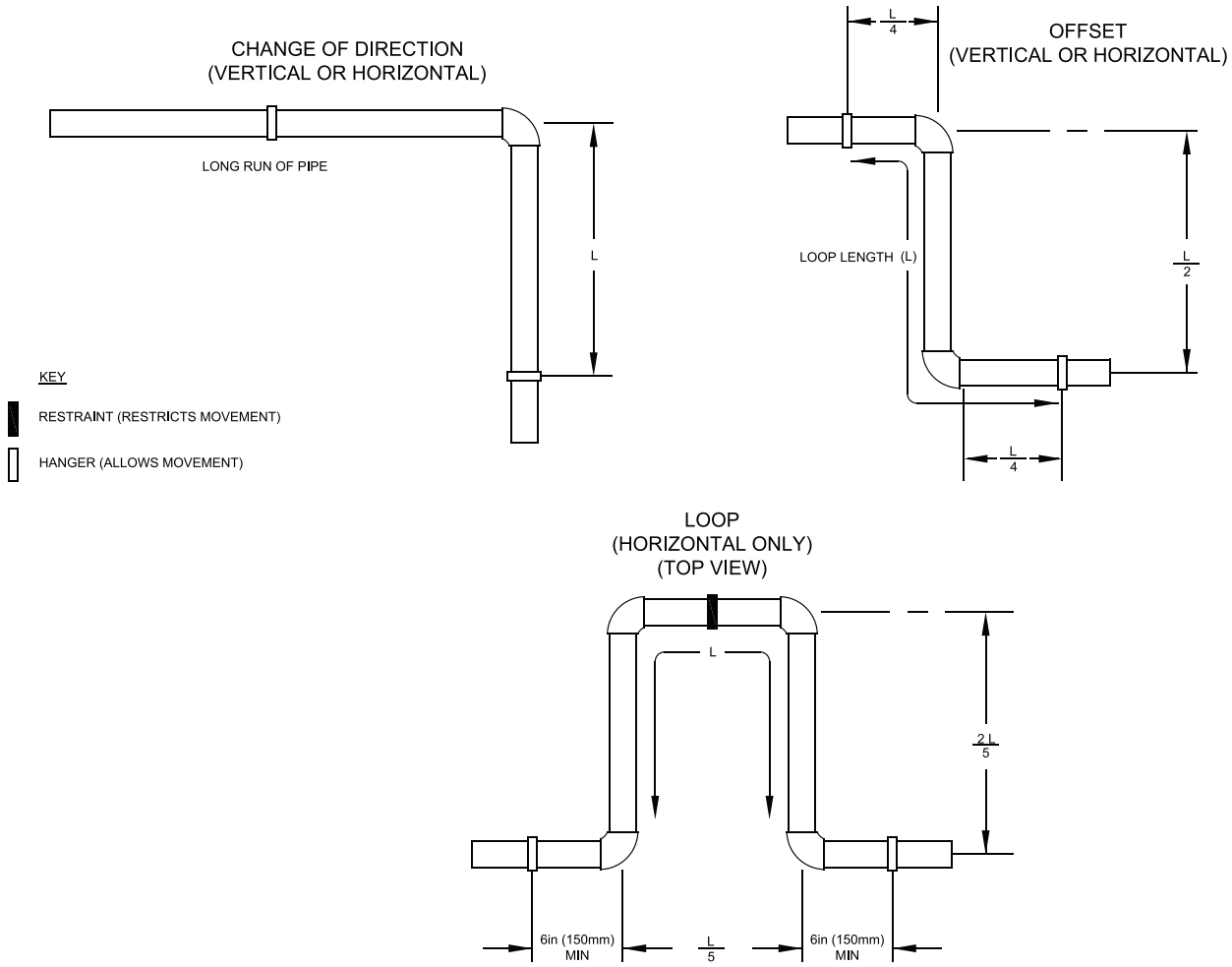

Figure 11: CPVC/PVC Expansion Loop and Offset

WARNING **Asphyxiation Hazard. Models ALP080B through ALP210B (floor mounted) and ALP285B only: Apply supplied dielectric grease to gasket inside vent section of two-pipe vent connector. Failure to apply the grease could result in flue gas leaks from gasket rupture during vent pipe installation or gasket deterioration due to condensate exposure.**

Table 7A: CPVC/PVC Vent & Air Intake Components Included With Boiler

Vent & Air Intake Components	Part Number	Quantity				
		ALP080B & ALP105B Standard Termination Vent Kits Include		ALP150B & ALP210B Standard Termination Vent Kits Include		ALP285B Standard Termination Vent Kit Includes
		Floor Mount Builds (P/N 106664-01)	Wall Mount Builds (P/N: 106665-01)	Floor Mount Builds (P/N 106676-01)	Wall Mount Builds (P/N 106674-01)	Floor Mount Builds (P/N 106677-01)
2” Schedule 40 PVC Coupling (Vent Terminal)	101870-01	1	1	N/A	N/A	N/A
3” Schedule 40 PVC Coupling (Vent Terminal)	106680-01	N/A	N/A	1	1	N/A
4” Schedule 40 PVC Coupling (Vent Terminal)	106681-01	N/A	N/A	N/A	N/A	1
2” Schedule 40 PVC 90º Elbow (Air Intake Terminal)	106618-01	1	1	N/A	N/A	N/A
3” Schedule 40 PVC 90º Elbow (Air Intake Terminal)	106678-01	N/A	N/A	1	1	N/A
4” Schedule 40 PVC 90º Elbow (Air Intake Terminal)	106679-01	N/A	N/A	N/A	N/A	1
2” Stainless Steel Rodent Screen	102191-04	2	2	N/A	N/A	N/A
3” Stainless Steel Rodent Screen	102191-01	N/A	N/A	2	2	N/A
4” Stainless Steel Rodent Screen	102191-02	N/A	N/A	N/A	N/A	2
3” x 30” Schedule 40 CPVC Pipe	102193-01	1	N/A	1	N/A	N/A
4” x 30” Schedule 40 CPVC Pipe	102193-02	N/A	N/A	N/A	N/A	1
3” Schedule 80 CPVC 90º Elbow	102192-01	1	N/A	1	N/A	N/A
4” Schedule 80 CPVC 90º Elbow	102192-02	N/A	N/A	N/A	N/A	1
3” Vent/3” Combustion Air CPVC/ PVC Connector with Flue Temperature Sensor and Sensor Cap	105133-01	1	N/A	1	N/A	N/A
4” Vent/4” Combustion Air CPVC/ PVC Connector with Flue Temperature Sensor and Sensor Cap	105133-03	N/A	N/A	N/A	N/A	1
3” Vent/3” Combustion Air CPVC/ PVC Connector Gasket	102185-01	1	N/A	1	N/A	N/A
4” Vent/4” Combustion Air CPVC/ PVC Connector Gasket	102185-02	N/A	N/A	N/A	N/A	1
Access Panel Assembly	102985-01	N/A	1	N/A	1	N/A
Wall Mounting Template	102986-01	N/A	1	N/A	1	N/A
#8 X 1/2” Tapping Screw	80860061	N/A	4	N/A	4	N/A

Table 7B: CPVC/PVC Vent & Air Intake Components (Installer Provided) Required for Optional Horizontal (Snorkel) Termination

Vent Components	Part Number	Quantity		
		ALP080B & ALP105B Horizontal (Snorkel) Termination	ALP150B & ALP210B Horizontal (Snorkel) Termination	ALP285B Horizontal (Snorkel) Termination
2 in. Schedule 40 PVC Pipe x up to 7 ft. max. vertical run	N/A Supplied by Others	2	N/A	N/A
3 in. Schedule 40 PVC Pipe x up to 7 ft. max. vertical run		N/A	2	N/A
4 in. Schedule 40 PVC Pipe x up to 7 ft. max. vertical run		N/A	N/A	2
2 in. Schedule 40 PVC 90° Elbow		4	N/A	N/A
3 in. Schedule 40 PVC 90° Elbow		N/A	4	N/A
4 in. Schedule 40 PVC 90° Elbow		N/A	N/A	4
2 in. Schedule 40 PVC Pipe x ½ ft. min. horizontal run		2	N/A	N/A
3 in. Schedule 40 PVC Pipe x ½ ft. min. horizontal run		N/A	2	N/A
4 in. Schedule 40 PVC Pipe x ½ ft. min. horizontal run		N/A	N/A	2

Table 7C: CPVC/PVC Vent & Air Intake Components (Installer Provided for Optional Vertical (Roof) Termination (Applicable to Twin-Pipe Venting with Separate Vent & Air Intake Roof Terminations)

Vent Components	Part Number	Quantity		
		ALP080B & ALP105B Vertical (Roof) Termination	ALP150B & ALP210B Vertical (Roof) Termination	ALP285B Vertical (Roof) Termination
2" Schedule 40 PVC Coupling (Vent)	N/A Supplied by Others	1	N/A	N/A
3" Schedule 40 PVC Coupling (Vent)		N/A	1	N/A
4" Schedule 40 PVC Coupling (Vent)		N/A	N/A	1
2" Schedule 40 PVC 90° Elbow (Air Intake)		2	N/A	N/A
3" Schedule 40 PVC 90° Elbow (Air Intake)		N/A	2	N/A
4" Schedule 40 PVC 90° Elbow (Air Intake)		N/A	N/A	2
2" Schedule 40 CPVC Pipe x ½ ft. min. horizontal run		1	N/A	N/A
3" Schedule 40 CPVC Pipe x ½ ft. min. horizontal run		N/A	1	N/A
4" Schedule 40 CPVC Pipe x ½ ft. min. horizontal run		N/A	N/A	1

Table 7D: Components (Installer Provided) Required for Optional IPEX Low Profile Horizontal Termination

Description	Ipex Part Number	Applicable to Boiler Models
2" Low Profile Termination Kit	196894	ALP080B, ALP105B
3" Low Profile Termination Kit	196895	ALP150B, ALP210B
4" Low Profile Termination Kit	196896	ALP285B

Table 7E: Components (Installer Provided) Required for Optional DiversiTech (HVENT) Low Profile Horizontal Termination

Description	DiversiTech (HVENT) Part Number	Applicable to Boiler Models
2" Low Profile Termination Kit	HVENT2	ALP080B, ALP105B
3" Low Profile Termination Kit	HVENT3	ALP150B, ALP210B
4" Low Profile Termination Kit	NA	ALP285B

Table 7F: Components (Installer Provided) Required for Optional Ipex (FGV) Concentric Horizontal Or Vertical Termination

Description	Ipex (FGV) Part Number	Applicable to Boiler Models
2" Termination Kit	196105	ALP080B, ALP105B
3" Termination Kit	196106	ALP150B, ALP210B
4" Termination Kit	NA	ALP285B

Table 7G: : Components (Installer Provided) Required for Optional DiversiTech (CVENT) Concentric Horizontal Or Vertical Termination

Description	DiversiTech (HVENT) Part Number	Applicable to Boiler Models
2" Termination Kit	CVENT2	ALP080B, ALP105B
3" Termination Kit	CVENT3	ALP150B, ALP210B
4" Termination Kit	NA	ALP285B

1. Components

a. See Table 7A for CPVC/PVC vent and combustion air components included with boiler.

b. See Table 7B for CPVC/PVC installer provided vent and combustion air components required for optional horizontal snorkel terminals shown in Figure 6B.

c. See Table 7C for CPVC/PVC installer provided vent and combustion air components required for optional vertical roof terminals shown in Figures 7A and 8.

d. See Table 7D for installer provided components required for optional IPEX low profile horizontal termination shown in Figures 6D and 6E.

e. See Table 7E for installer provided components required for optional DiversiTech (HVENT) low profile horizontal termination shown in Figures 6D and 6F.

f. See Table 7F for installer provided components required for optional IPEX FGV concentric horizontal or vertical terminations shown in Figures 6G, 7B and 7C.

g. See Table 7G for installer provided components required for optional DiversiTech (CVENT) concentric horizontal or vertical terminations shown in Figures 6G, 7B and 7C.

2. Field Installation of CPVC/PVC Two-Pipe Vent System Connector

Refer to Figure 9 and following steps:

a. Position the CPVC/PVC vent connector and gasket onto boiler rear panel and insert vent connector inner stainless steel vent pipe into heat exchanger vent outlet.

b. Align vent connector plate and gasket clearance holes with rear panel engagement holes. Then, secure the connector and gasket to the panel with six mounting screws.

c. Attach flue temperature sensor wiring harness (taped to boiler rear panel) female connectors to the sensor male spade terminals. Failure to do so will prevent boiler from starting and boiler display will flash Red and display Limit String Fault (see Section XII “Troubleshooting” for details).

NOTICE **Flue temperature sensor harness must be connected to flue temperature sensor for the boiler to start-up and operate properly. The installation is not complete unless the harness and the sensor are interconnected**

3. Near-Boiler Vent/Combustion Air Piping

Refer to Figure 10A and the following Steps:

a. Models ALP150BF thru ALP210BF (floor mounted) and ALP285B only:

Apply supplied dielectric grease (grease pouch attached to two-pipe vent connector) to gasket inside vent section of 3 in. x 3 in. or 4 in. x 4 in. two-pipe vent connector. The grease will prevent gasket rupture when inserting vent pipe and gasket deterioration due to condensate exposure.

b. Install provided Schedule 40 x 30 in. (760 mm) long CPVC pipe into the vent section of the connector with a slight twisting motion and secure by tightening the worm band clamp screw.

c. All CPVC vent components supplied with boiler inside vent carton [Schedule 40 x 30 in. (760 mm) long CPVC pipe and Schedule 80 CPVC 90° Elbow] must be used for near-boiler piping before transitioning to Schedule 40 PVC (ASTM 2665) pipe components for remainder of vent system. The 30 in. (760 mm) long CPVC straight pipe may be cut to accommodate desired vent configuration provided both pieces are used in conjunction with CPVC 90° Elbow before any PVC components are used. Ensure that the CPVC 90° Elbow is the first elbow used in the vent system as it exits the boiler.

d. Insert Schedule 40 PVC combustion air pipe (installer provided) into the combustion air section of the connector with a slight twisting motion and secure by tightening the worm band clamp screw.

e. Clean all vent and combustion air pipe joints with primer and secure with transition cement. Follow application instructions provided on primer and cement bottles.

4. Field Installation of CPVC Vent Pipe - Wall Mounted Boiler Builds

a. The wall mounted boiler builds do not require using 3 in. Schedule 80 CPVC 90° elbow for near-boiler vent piping. Refer to Figure 10B and the following Steps:

b. Apply supplied dielectric grease (grease pouch attached to 90° vent elbow outlet inside air box) to gasket inside vent elbow. The grease will prevent gasket rupture when inserting vent pipe and gasket deterioration due to condensate exposure.

c. Insert provided 3 in. Schedule 40 x 30 in. long CPVC pipe through air box top combination vent/ combustion air collar vent opening and slide down with a slight twisting motion, until the pipe lower end is firmly inserted into female end of factory installed 90° elbow vent connector.

d. Secure the pipe by tightening the metal strap worm screw.

⚠ WARNING Failure to properly secure the vent into the elbow with the clamp could lead to property damage, personal injury or loss of life.

e. The CPVC 30 in. long straight pipe may be cut to accommodate desired vent configuration. If the CPVC 30 in. straight pipe needs to be cut into two pieces to accommodate desired vent configuration, insure that the first vertical piece has minimum length of 12 in. and extends 1-5/8 in. above air box top, so a coupling or an elbow can be attached to it.

f. The factory supplied CPVC vent pipe (3 in. Schedule 40 x 30 in. long CPVC pipe) must be used for near-boiler piping before transitioning to Schedule 30 PVC (ASTM 2665) pipe components for reminder of vent system.

g. Clean all vent and combustion air pipe joints with primer and secure with transition cement. Follow application instructions provided on primer and cement bottles.

h. For ALP080BW and ALP105BW vent size can be reduced from 3” nominal diameter to 2” nominal diameter by mounting installer provided 3” x 2” CPVC concentric reducing coupling or PVC concentric reducing coupling, in vertical position only, onto the end of supplied CPVC vent pipe. See Table 5A Notes and paragraph 6 ‘Horizontal Sidewall Termination’ and Figure 12 ‘Wall Penetration Clearances for PVC Pipe for PVC usage for venting limitation). Thereafter, the balance of vent pipe up to vent termination can be done with PVC (ASTM 2665) pipe.

i. For ALP080BW and ALP105BW air intake size can be reduced from 3” nominal diameter to 2” nominal diameter by mounting installer provided 3” x 2” concentric PVC reducing coupling onto the end of PVC (ASTM 2665) pipe mounted over air box intake collar. Thereafter, the balance of air intake pipe up to air intake termination can be done with PVC (ASTM 2665) pipe.

j. For ALP080BF and ALP105BF vent size can be reduced from 3” nominal diameter to 2” nominal diameter by mounting installer provided 3” x 2” concentric CPVC reducing coupling or PVC concentric reducing coupling, in vertical position only, onto the end of supplied CPVC vent pipe/elbow combination. See Table 5A Notes and paragraph 6 ‘Horizontal Sidewall Termination’ and Figure 12 ‘Wall Penetration Clearances for PVC Pipe for PVC usage for venting limitation. Thereafter, the balance of vent pipe up to vent termination can be done with PVC (ASTM 2665) pipe.

5. System Assembly

⚠ WARNING Asphyxiation Hazard. CPVC/PVC vent piping and fittings rely on glued joints for proper sealing. Follow all manufacturer instructions and warnings when preparing pipe ends for joining and using the primer and the cement.

a. Plan venting system to avoid possible contact with plumbing or electrical wires. Start at vent connector at boiler and work towards vent termination.

b. Design the vent system to allow 3/8 in. (9.5 mm) of thermal expansion per 10 ft. (3.0 m) of CPVC/PVC pipe. Runs of 20 ft. (6.1 m) or longer that are restrained at both ends must use an offset or expansion loop. Refer to Figure 11 and Table 6A.

c. All CPVC/PVC vent and combustion air pipe joints must be cleaned with primer and glued with cement. Follow all manufacturer instructions and warnings when preparing pipe ends for joining and using the primer and the cement.

6. Horizontal Sidewall Termination

a. Standard Two-Pipe Termination, see Figures 5A and 5B.

i. Vent Piping

Running PVC vent pipe inside Enclosures and through Walls:

- PVC vent pipe must be installed in such way as to permit adequate air circulation around the outside of the pipe to prevent internal wall temperature rising above ANSI Z21.13 standard specified limit.
- Do not enclose PVC venting. Use higher temperature rated CPVC pipe in enclosed spaces or to penetrate combustible or non-combustible walls.

MAX. WALL THICKNESS ("T")	2in (50mm)*	6in (150mm)	12in (300mm)
MINIMUM AIR SPACE AROUND PIPE ("C")	0*	1in (25mm)	1-3/4in (44mm)

*WALL MUST BE OF NON-COMBUSTIBLE CONSTRUCTION

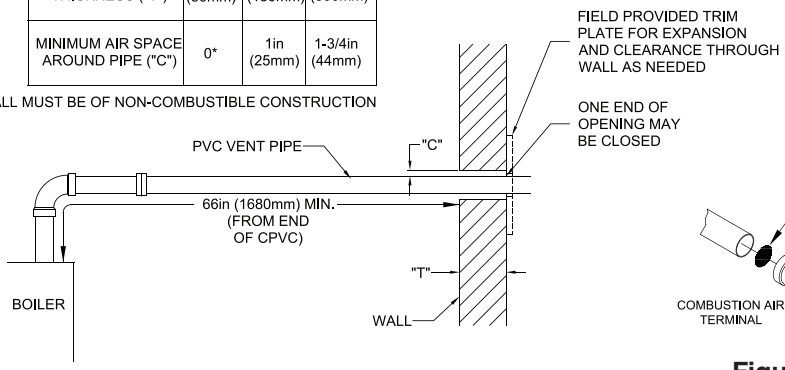

Figure 12: Wall Penetration Clearances for PVC Vent Pipe

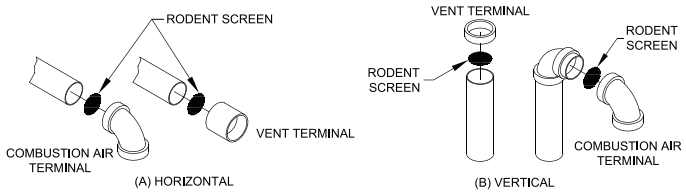

Figure 13: Rodent Screen Installation, Horizontal Vertical, Straight Vent Terminations

- Following the installation of factory supplied near boiler CPVC venting components (30” long pipe and 90° elbow, where applicable) **PVC pipe may be used to penetrate combustible or non-combustible walls up to the exterior vent termination only if the following three conditions are met simultaneously** (see Figure 12):
  1. The wall penetration is 66 in. (1680 mm) or more, measured along the vent from the end of the CPVC pipe at the boiler vent connection to the wall.
  2. The wall is 12 in. (300 mm) thick or less.
  3. The minimum air space shown in Figure 12 is maintained around the outside of the vent pipe to provide air circulation.

  If above three conditions cannot be met simultaneously when penetrating a combustible wall, CPVC pipe must be used for wall penetration up to the exterior vent termination. A PVC vent termination may be used outside to terminate the CPVC vent.
- Size and cut wall opening such that a minimal clearance is obtained and to allow easy insertion of vent pipe.
- Apply sealant between vent pipe and wall opening to provide weather-tight seal. Sealant should not restrain the expansion of the vent pipe.
- Install contractor provided optional trim plate on wall outside surface to cover wall opening (see Figure 12).
- Secure trim plate to wall with nails or screws and seal ID and plate OD or perimeter with sealant material.
- Install rodent screen and vent terminal (supplied with boiler). See Figure 13 for appropriate configuration details.

  ***NOTICE* Methods of securing and sealing terminals to the outside wall must not restrain the thermal expansion of the vent pipe.**

ii. Combustion Air Piping
- Size combustion air pipe wall penetration opening to allow easy insertion of the pipe.
- Install rodent screen and combustion air terminal (supplied with boiler). See Figure 13 for appropriate configuration details.
- Apply sealant between combustion air pipe and wall opening to provide weather-tight seal.

b. Optional Two-Pipe Snorkel Termination, see Figures 6A and 6B.

This installation will allow a maximum of 7 ft. (2.1 m) vertical exterior run of the vent/combustion air piping to be installed on the CPVC/PVC horizontal venting application.

***NOTICE* Exterior run to be included in equivalent vent/combustion air lengths.**

i. Vent Piping
- After penetrating wall, install a Schedule 40 PVC 90° elbow so that the elbow leg is in the up direction.

- Install maximum vertical run of 7 ft. (2.1 m) of Schedule 40 PVC vent pipe. See Figure 6A.
- Install another PVC 90° elbow at top of vent pipe length so that elbow leg is opposite the building's exterior surface.
- Install rodent screen and vent terminal (supplied with boiler, see Figure 13 for appropriate configuration.
- Brace exterior piping if required.

ii. Combustion Air Piping

- After penetrating wall, install a Schedule 40 PVC 90° elbow so that elbow leg is in the up direction.
- Install maximum vertical run of 7 ft. (2.1 m) of Schedule 40 PVC air pipe. See Figure 6B.
- Install another PVC 90° elbow at top of air pipe length so that elbow leg is opposite the building's exterior surface.
- Install rodent screen and combustion air terminal (supplied with boiler). See Figure 13 for appropriate configuration.
- Brace exterior piping if required.

c. Optional Two-Pipe Termination into IPEX Low Profile or DiversiTech HVENT Terminal – horizontal thru sidewall, see Figures 6D and 6F.

i. Vent Piping

- Install fire stops where vent passes through framed walls. The fire stop must close the opening between the vent pipe and the structure.
- Follow IPEX Low Profile or DiversiTech HVENT terminal instructions for installation details.

ii. Combustion Air Piping

- *Follow IPEX Low Profile or DiversiTech HVENT terminal instructions for installation details.*

7. Vertical Roof Termination

a. Standard Two-Pipe Termination, see Figures 7 and 8.

i. Vent Piping

- Install fire stops where vent passes through floors, ceilings or framed walls. The fire stop must close the opening between the vent pipe and the structure.
- Whenever possible, install vent straight through the roof. Refer to Figures 7 and 8.
  - Size roof opening to maintain minimum clearance of 1 in. (25 mm) from combustible materials.
  - Extend vent pipe to maintain minimum vertical and horizontal distance of 12 in. (300 mm) from roof surface. Allow additional vertical distance for expected snow accumulation. Provide brace as required.

  ***NOTICE* Vertical venting and combustion air roof penetrations (where applicable) require the use of roof flashing and storm collar, which are not supplied with boiler, to prevent moisture from entering the structure.**

  - Install storm collar on vent pipe immediately above flashing. Apply Dow Corning Silastic 732 RTVSealant or equivalent between vent pipe and storm collar to provide weather-tight seal.
- Install rodent screen and vent terminal (supplied with boiler). See Figure 13 for appropriate configuration.
- Brace exterior piping if required.

ii. Combustion Air Piping

- If possible, locate combustion air termination on the same roof location as the vent termination to prevent nuisance boiler shutdowns. Combustion air terminal may be installed closer to roof than vent. Alternatively, boiler may be installed with vertical roof vent terminal and sidewall combustion air terminal.
- Size roof opening to allow easy insertion of combustion air piping and allow proper installation of flashing and storm collar to prevent moisture from entering the structure.
  - Use appropriately designed vent flashing when passing through roofs. Follow flashing manufacturers' instructions for installation procedures.
  - Extend combustion air pipe to maintain minimum vertical and horizontal distance of 12 in.

(300 mm) from roof surface. Allow additional vertical distance for expected snow accumulation. Provide brace as required.

- Install storm collar on combustion air pipe immediately above flashing. Apply Dow Corning Silastic 732 RTV Sealant or equivalent between combustion air pipe and storm collar to provide weather-tight seal.

- Install rodent screen and combustion air terminal (supplied with boiler). See Figure 13 for appropriate configuration.
- Brace exterior piping if required.

b. Optional Two-Pipe Termination into IPEX FGV or DiversiTech CVENT Concentric Terminal – vertical thru roof, see Figures 7B and 7C.

i. Vent Piping

- Install fire stops where vent passes through floors, ceilings or framed walls. The fire stop must close the opening between the vent pipe and the structure.
- Follow IPEX FGV or DiversiTech CVENT concentric terminal instructions for installation details.

ii. Combustion Air Piping

- Follow IPEX FGV or DiversiTech CVENT concentric terminal instructions for installation details.

C. Polypropylene Venting

WARNING **Asphyxiation Hazard. Follow these instructions and the installation instructions included by the listed polypropylene venting component manufacturers, whichever applicable. Failure to do so could cause products of combustion to enter the building, resulting in severe property damage, personal injury or death. Where a conflict arises between a manufacturer instructions and these instructions, the more restrictive instructions shall govern.**

- **Do not mix vent components or joining methods for listed manufacturers.**
- **Examine all components for possible shipping damage prior to installation.**
- **All condensate that forms in the vent must be able to drain back to the boiler.**

NOTICE **Do not exceed maximum vent/combustion air system length. Refer to "2. Vent/Combustion Air Piping" under "A. General Guidelines" of this section for maximum vent/combustion air system length.**

Use only vent and combustion air terminals and terminal locations shown in "3. Vent/Combustion Air Terminals" under "A. General Guidelines" of this section.

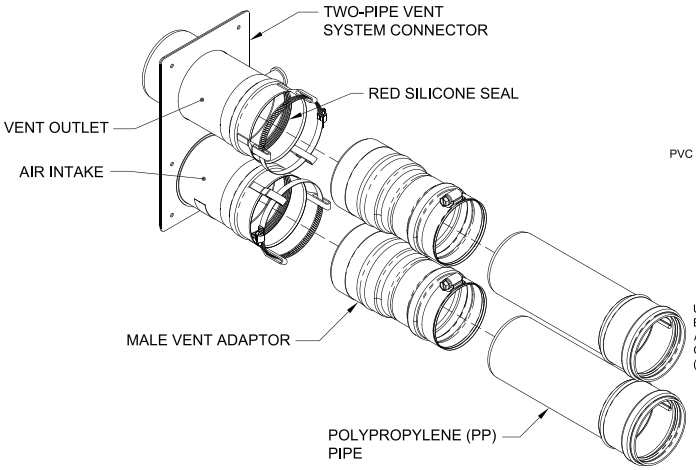

Figure 14: Vent System Field Modification to Install PVC to PP Adapter (M&G/DuraVent shown)

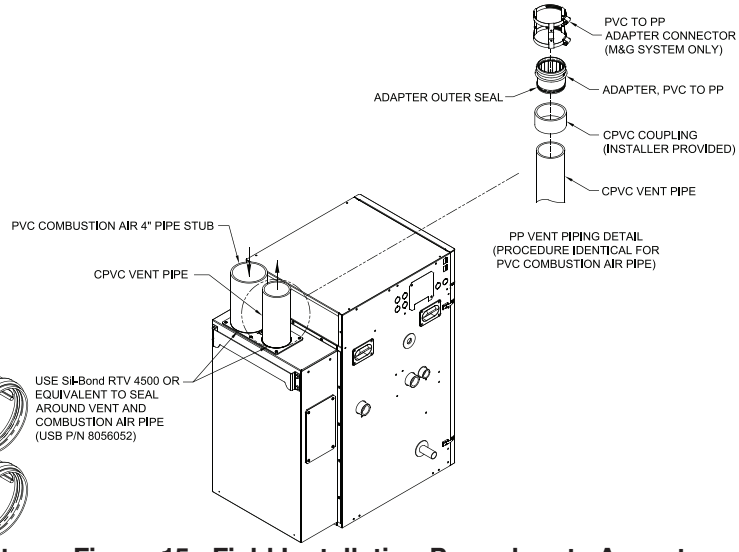

Figure 15: Field Installation Procedure to Accept Polypropylene Vent Piping - Wall Mounted Boiler

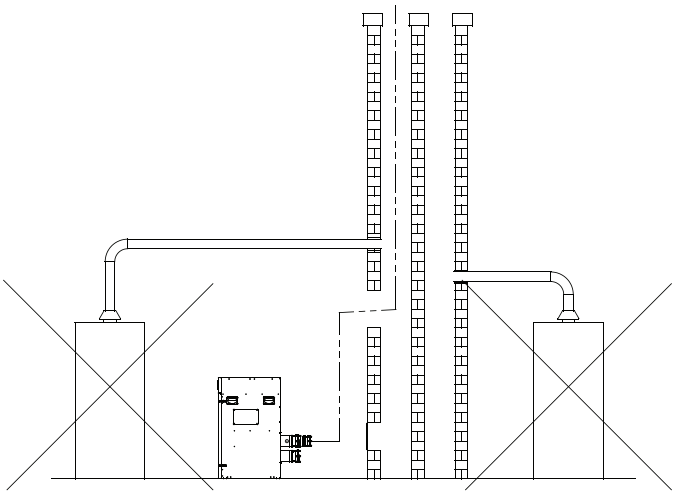

Venting of Other Appliances (or Fireplace) into Chase or Adjacent Flues Prohibited!

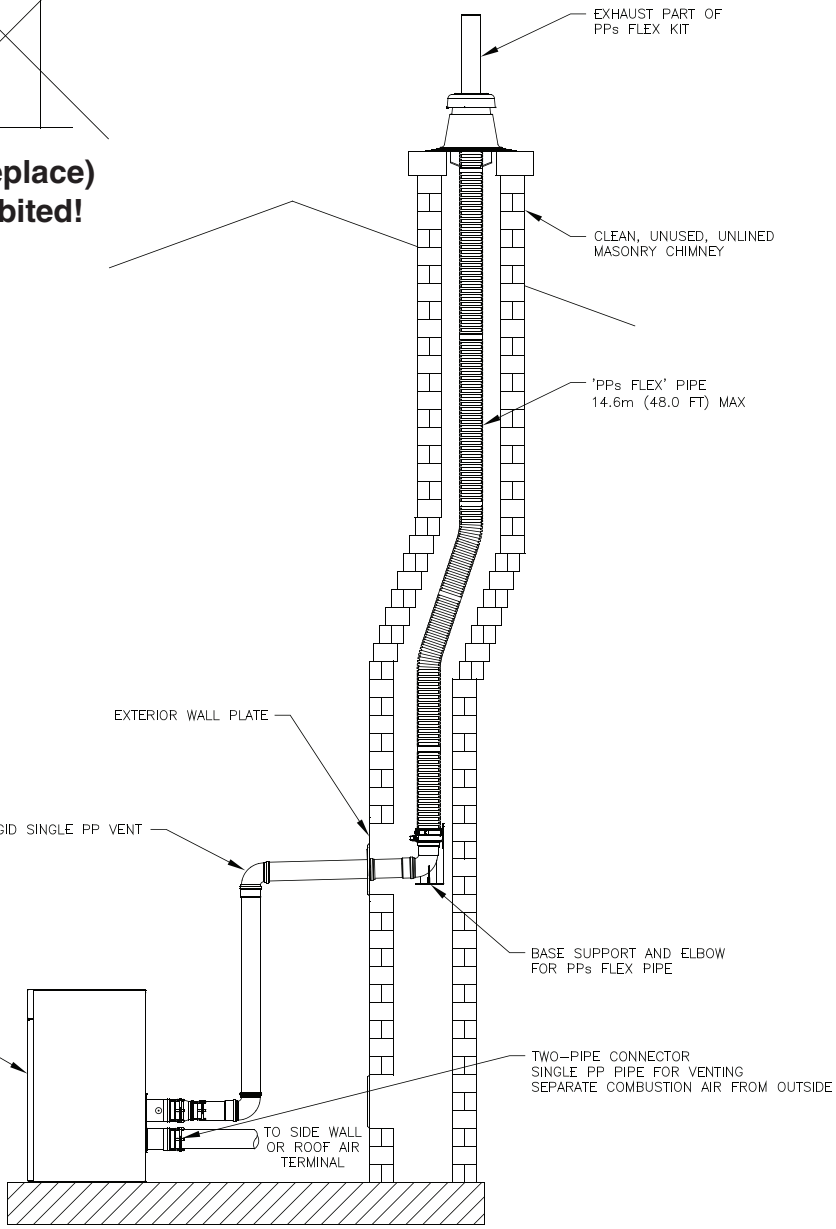

Figure 16A: Flexible PP Vent in UNUSED Masonry Chimney with Separate Combustion Air Intake

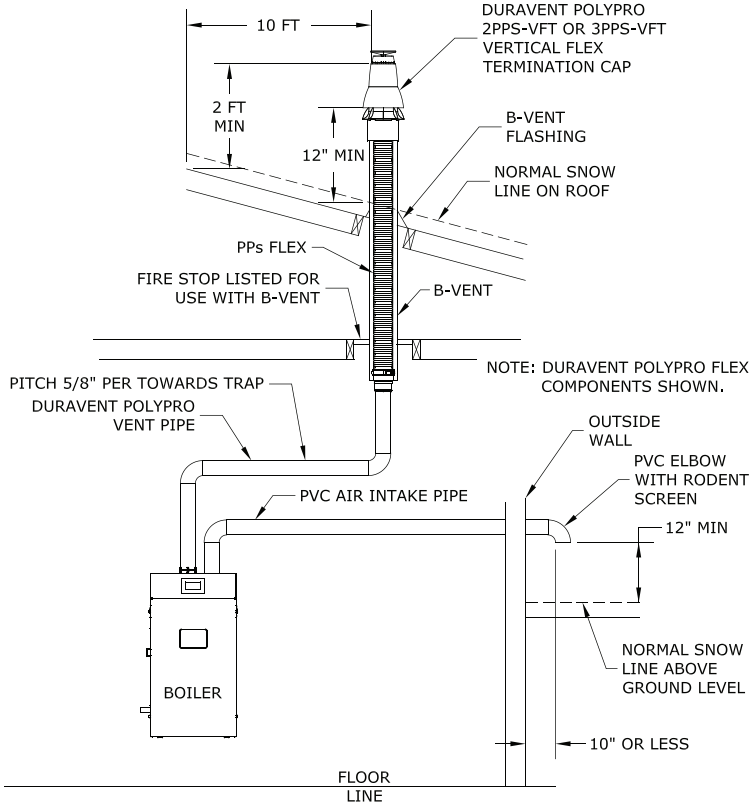

Figure 16B: Flexible PP Vent in UNUSED B-vent with Separate Combustion Air Intake

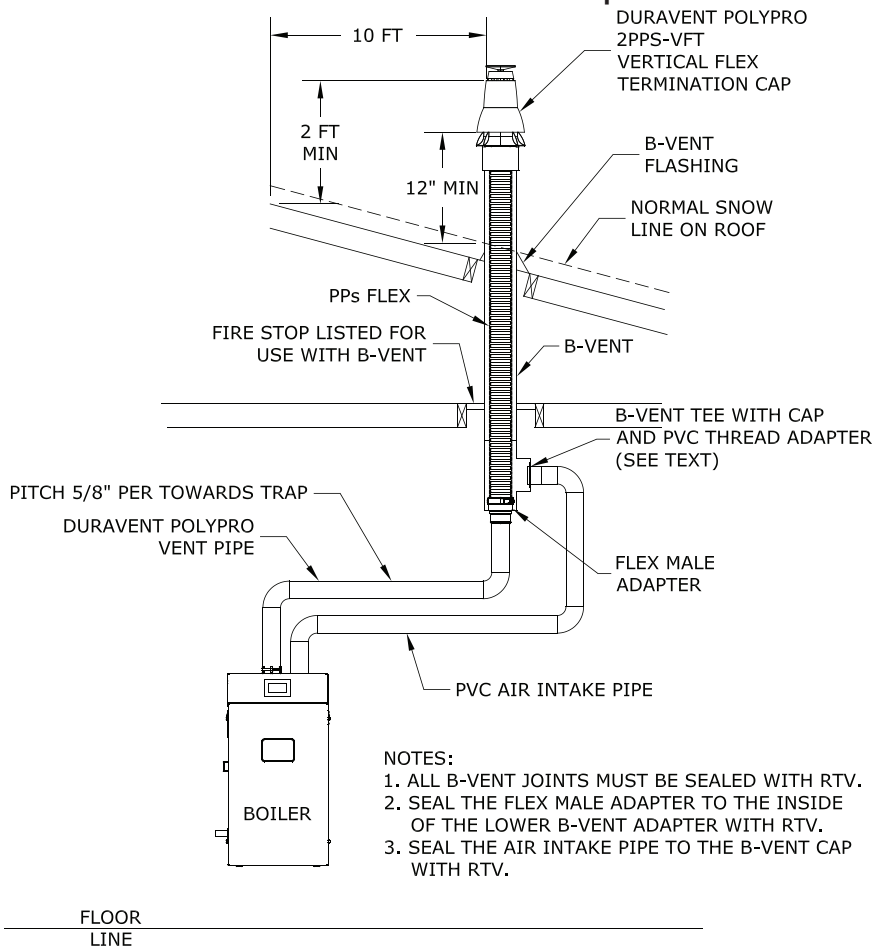

Figure 16C: Flexible M&G/DuraVent PP Vent in UNUSED B-vent with Integrated Combustion Air Intake

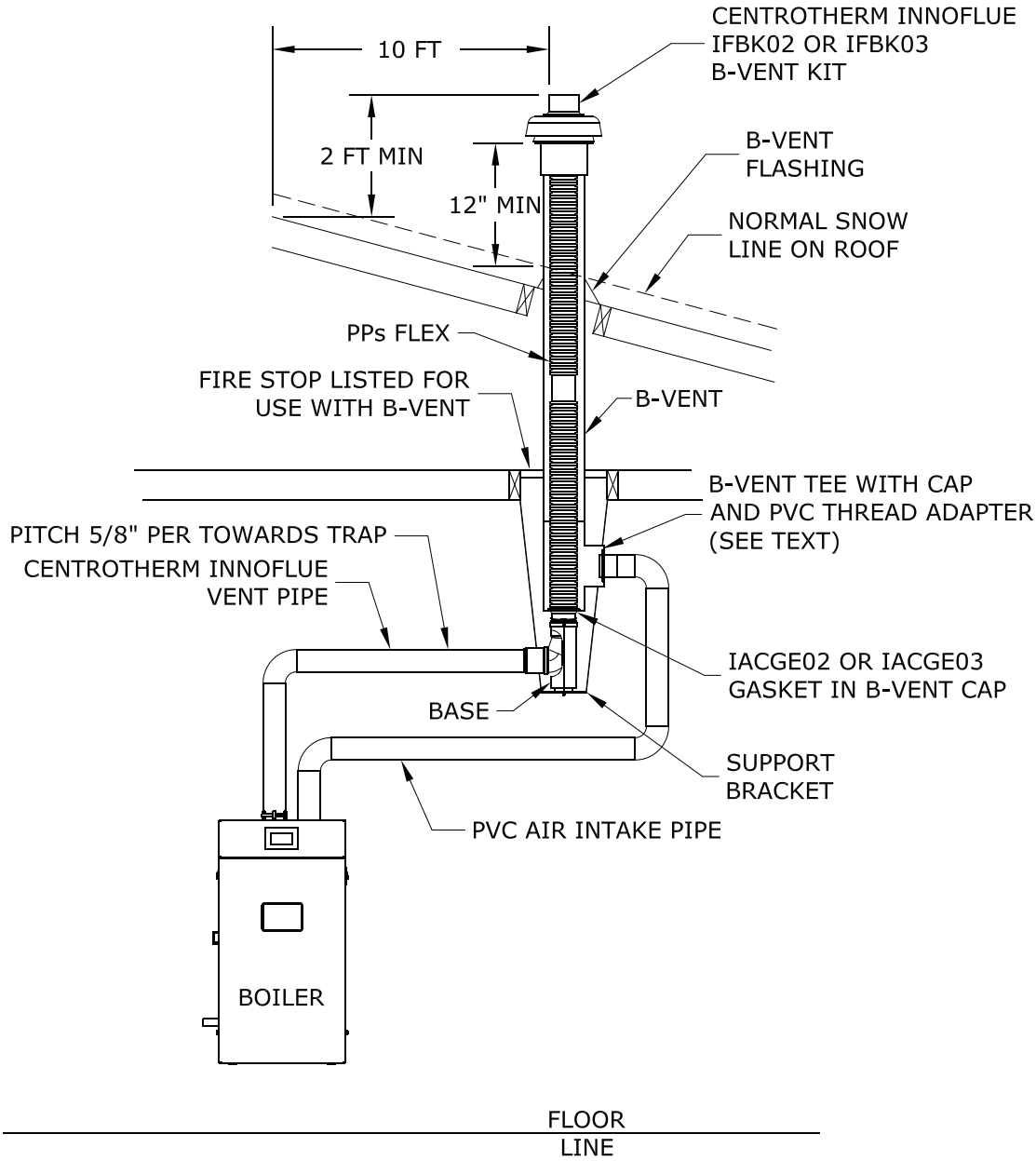

Figure 16D: Flexible Centrotherm PP Vent in UNUSED B-vent with Integrated Combustion Air Intake

Table 8: Listed Polypropylene Vent System Manufacturers

Make	Model
M&G/DuraVent	PolyPro Single Wall Rigid Vent PolyPro Flex Flexible Vent (ALP080B through ALP285B)
Centrotherm Eco Systems	InnoFlue SW Rigid Vent Flex Flexible Vent (ALP080B through ALP285B)
Selkirk PolyFlue	PolyFlue Single Wall Rigid Vent FlexPipe Flexible Vent (ALP080B through ALP285B)
Z-Flex Z-DENS	Z-DENS Single Wall Rigid Vent Z-DENS Flex Flexible Vent (ALP080B through ALP285B)

Table 9A: Approved Polypropylene Pipe, Fittings and Terminations - M&G/DuraVent

Boiler Model	M&G / DuraVent Part Numbers/Sizes									
	Nominal Pipe Diameter	CPVC Coupling Adapter, PVC to PP - Wall Mounted Boiler Builds	Male Boiler Adapter, PVC to PP - Floor Mounted Boiler Builds	Adapter Connector	Pipe Joint Locking Band	Side Wall Termination Elbow & Screen	Side Wall/ Roof Termination SW Pipe & Screen	Chimney Flex Kit for Venting Only	Vertical B-Vent Termination Cap	Flex Component B-Vent Kit
ALP080B ALP105B	2”	2PPS-ADL	3PPS-03PVCM-2PPF	PPS-PACL (810004128)	2PPS-LB2	3PPS-TB	2PPS-(*) B & 2 PPS-BG	2PPS-FKL	2PPS-VFTL	NA
ALP150B ALP210B	3”	3PPS-ADL	3PPS-03PVCM-3PPF		3PPS-LB2	3PPS-TB 4PPS-TB	3PPS-(*) B & 3PPS-BG	3PPS-FKL	3PPS-VFTL	NA
ALP285B	4”	NA	4PPS-04PVCM-4PPF		4PPS-LB2	4PPS-TB	4PPS-(*) B & 4PPS-BG	4PPS-FKL	NA	NA

Note: (*) – Pipe Length

Table 9B: Approved Polypropylene Pipe, Fittings and Terminations - Centrotherm Eco

Boiler Model	Centrotherm Eco Part Numbers/Sizes								
	Nominal Pipe Diameter	CPVC Coupling Adapter, PVC to PP - Wall Mounted Boiler Builds	Male Boiler Adapter, PVC to PP - Floor Mounted Boiler Builds	Pipe Joint Locking Band	Side Wall Termination Elbow & Screen	Side Wall/ Roof Termination SW Pipe & Screen	Vertical B-Vent Termination Cap	Chimney Flex Kit for Venting Only	Flex Component B-Vent Kit
ALP080B ALP105B	2”	ISSAL0202	ISSA0303	IANS02	ISELL02787UV & IASPP02	ISVL022UV & IASPP02	ISCP02	IFCK02 (25, 35, 50)	IFBK0225 (04, 05, 06) IFBK0235 (04, 05, 06) IFBK0245 (04, 05, 06)
ALP150B ALP210B	3”	ISSAL0303	ISSA0303	IANS03	ISELL03787UV & IASPP03	ISVL032UV & IASPP03	ISCP03	IFCK03 (25, 35, 50)	IFBK0325 (04, 05, 06) IFBK0335 (04, 05, 06) IFBK0345 (04, 05, 06)
ALP285B	4”	N/A	ISSA0404	IANS04	ISEL0487UV & IASPP04	ISVL042UV & IASPP04	ISCP04	IFCK04 (25, 35,50)	IFBK0425 (04, 05, 06) IFBK0435 (04, 05, 06) IFBK0445 (04, 05, 06)

Table 9C: Approved Polypropylene Pipe, Fittings and Terminations – Z-Flex Z-Dens™

Boiler Model	Z-Flex Z-Dens Part Numbers/Sizes									
	Nominal Pipe Diameter	CPVC Coupling Adapter, PVC to PP - Wall Mounted Boiler Builds	Male Boiler Adapter, PVC to PP - Floor Mounted Boiler Builds	Extended Male Boiler Adapter, PVC to PP – Wall Mounted Boiler Builds	Pipe Joint Locking Band	Side Wall Termination Elbow & Screen	Side Wall/ Roof Termination SW Pipe & Screen	Chimney Flex Kit for Venting Only	Vertical B-Vent Termination Cap	Flex Component B-Vent Kit
ALP080B	2”	2ZDCPVC2	2ZDCPVC2	NA	2ZDLC2	2ZDE287UV & 2ZDES2	2ZDP2(*) UV & 2ZDES2	NA	2ZDFK2(25, 35)	NA
ALP105B										
ALP150B	3”	2ZDCPVC3	2ZDCPVCG3	2ZDCPVCG3L	2ZDLC3	2ZDE387UV & 2ZDES3	2ZDP3(*) UV & 2ZDES3	NA	2ZDFK3(25, 35)	NA
ALP210B										
ALP285B	4”	NA	2ZDCPVCG4	NA	2ZDLC4	2ZDE487UV & 2ZDES4	2ZDP4(*) UV & 2ZDES4	NA	2ZDFK4(25, 35)	NA

Note: (*) – Pipe Length

Table 9D: Approved Polypropylene Pipe, Fittings and Terminations – Selkirk Polyflue™

Boiler Model	Selkirk Polyflue Part Numbers/Sizes								
	Nominal Pipe Diameter	CPVC Coupling Adapter, PVC to PP - Wall Mounted Boiler Builds	Male Boiler Adapter, PVC to PP - Floor Mounted Boiler Builds	Pipe Joint Locking Band	Side Wall Termination Elbow & Screen	Side Wall/ Roof Termination SW Pipe & Screen	Vertical B-Vent Termination Cap	Chimney Flex Kit for Venting Only	Flex Component B-Vent Kit
ALP080B	2”	NA	3PF-PVC-PF	PF-LB	2PF-90UV & 2PF-HVST	2PF-39UV & 2PF-HVST	N/A	2PF-FLEX-KIT	N/A
ALP105B									
ALP150B	3”	3PF-NOM-PF	3PF-PVC-PF	PF-LB/4PF-LB	3PF-90UV & 3PF-HVST	3PF-39UV & 3PF-HVST	N/A	3PF-FLEX-KIT	N/A
ALP210B									
ALP285B	4”	NA	4PF-PVC-PF	4PF-LB	4PF-90UV & 4PF-HVST	4PF-39UV & 4PF-HVST	N/A	4PF-FLEX-KIT	N/A

1. Components

a. Listed polypropylene vent system manufacturers are shown in Table 8. It is the responsibility of the installing contractor to procure polypropylene vent system pipe and related components.

i. All listed polypropylene vent system manufacturers comply with the requirements of ULC-S636-08 'Standard for Type BH Gas Venting Systems'.

ii. Centrotherm Eco Systems InnoFlue SW Rigid Vent and Flex Flexible Vent comply with the requirements of UL 1738 'Standard for Safety for Venting Systems'.

b. See Table 9A for specific M&G Duravent components.

c. See Table 9B for specific Centrotherm Eco Systems components.

d. See Table 9C for specific Z-Flex Z-Dens™ components.

e. See Table 9D for specific Selkirk Polyflue components.

2. Field Installation of CPVC/PVC Two-Pipe Vent System Connector and PVC to Polypropylene Adapter - Floor Mounted Builds

a. Install CPVC/PVC two-pipe vent system connector. Follow instructions in "2. Field Installation of CPVC/PVC Two-Pipe Vent System Connector" under "B. CPVC/PVC Venting." See Figures 9 and 14.

b. Models ALP080BF through ALP210BF (floor mounted) and ALP285B only: Apply provided dielectric grease (grease pouch taped to the vent system connector) all around to the vent or air connection inner red silicon gasket.

c. Push and twist boiler male adapter, PVC to PP, into two-pipe vent system connector vent port until bottomed out.

d. Tighten the worm band clamp screw to secure male PVC to PP adapter.

e. Do not install PVC to PP adapter at the lower combustion air supply port of the two-pipe vent system connector when using PVC pipe for combustion air supply to boiler.

3. Alpine Boiler Two-Pipe Vent System Field Installation Procedure to Accept Polypropylene Vent Piping - Wall Mounted Boiler Builds

Alpine wall mounted boiler builds have a factory installed vent connector 90° elbow inside air box and air box top located combustion air collar.

Wall hung boilers having 3" vent connection 90° elbow inside air box (ALP080, ALP105, ALP150 and ALP210) can accept Z-Flex Z-Dens™ extended boiler male adapter, PVC to PP (part number 2ZDCPVCG3L, see Table 9C) followed by the balance of Z-Flex Z-Dens™ polypropylene vent piping including vent termination. Using of factory provided 30" CPVC pipe and 90° CPVC elbow is not required if Z-Flex Z-Dens™ polypropylene vent system is used.

No other polypropylene vent system manufacturer - M&G/DuraVent (Polypro), Centrotherm (Eco) and Selkirk (Polyflue) - offers such extended boiler male adapter at this instruction release time.

To accept polypropylene piping manufactured by M&G/DuraVent (Polypro), Centrotherm (Eco) and Selkirk (Polyflue) for venting and/or combustion air (see Figure 15 "Field Installation Procedure to accept Polypropylene Vent Piping - Wall Mounted Boiler"):

a. Install supplied 30 in. long CPVC pipe into a factory installed vent connector 90° elbow and secure with the elbow band clamp.

b. When using polypropylene pipe for combustion air intake, install a 4 in. long stub of an appropriate diameter PVC air intake pipe (contractor supplied) onto air box top located combustion air collar. Seal the stub to air box top with silicon all around.

c. Attach and cement an appropriate diameter CPVC coupling (contractor supplied) to previously installed 30 in. long CPVC pipe exposed end.

d. If using polypropylene pipe for combustion air intake, attach and cement an appropriate diameter PVC coupling (contractor supplied) to exposed end of PVC air intake stub.

e. Lubricate CPVC coupling adapter, PVC to PP, (see Tables 9A thru 9C as applicable) outer seal with water (or approved water based lubricant), then insert and push lubricated adapter end into CPVC coupling open end until bottomed out.

f. If using polypropylene pipe for combustion air intake, repeat the above step installing the PVC to PP coupling adapter into PVC air intake.

g. Install the adapter connector PPS-PACL (applicable to M& G/DuraVent vent system only) to secure PVC to PP coupling adapter to a coupling and a polypropylene rigid pipe, either venting and/or air intake.

4. System Assembly

WARNING Asphyxiation Hazard. Vent systems made by listed PP vent system manufacturers rely on gaskets for proper sealing. When these vent systems are used, take the following precautions:

- **Make sure that gasket is in position and undamaged in the female end of the pipe.**
- **Make sure that both the male and female pipes are free of damage prior to assembly.**
- **Only cut vent pipe as permitted by the vent manufacturer in accordance with their instructions. When pipe is cut, cut end must be square and carefully de-burred prior to assembly.**
- **Use locking band clamps at all vent pipe joints.**

a. Plan venting system to avoid possible contact with plumbing or electrical wires. Start at vent connector at boiler and work towards vent termination.

b. Follow all manufacturer instructions and warnings when preparing pipe ends for joining and when assembling the vent/combustion air system.

c. Use locking band clamps at all vent pipe joints.

***NOTICE* The venting system must be free to expand and contract and supported in accordance with installation instructions included by the listed polypropylene venting component manufacturers, whichever applicable. Polypropylene pipe sections must be disengaged 1/4 to 5/8 in.**

(6 mm to 16 mm) per joint to allow for thermal expansion.

5. Running Flexible Polypropylene Vent(Liner) Through Unused Masonry Chimney Chase or B-Vent Chase

WARNING Asphyxiation Hazard. Flexible polypropylene vent must be installed only in an UNUSED chimney. A chimney, either single or multiple flue type, is considered UNUSED when none of the flues is being used for any appliance venting. Where one of the multiple flues is being used for an appliance venting, the flexible vent installation is not permitted through any of adjacent flues.

***NOTICE* Pressure drop for flexible polypropylene liner is 20% greater than from rigid pipe. Multiply measured flexible polypropylene liner length by 1.2 to obtain equivalent length. Maximum equivalent length of flexible polypropylene liner is 48 ft. (14.6 m).**

a. Models ALP080B through ALP285B are listed for vertical venting by installing flexible vent in an UNUSED masonry chimney/chase or B-Vent chase and supplying combustion air through a separate sidewall or roof combustion air terminal.

b. Refer to Figures 16A or 16B for details of masonry chimney chase or B-Vent chase installation.

c. Flexible polypropylene pipe must be treated carefully and stored at temperatures higher than 41°F (5°C).

d. Do not bend or attempt to install flexible pipe if it has been stored at lower ambient temperature without allowing the pipe to warm up to a higher temperature first.

WARNING Asphyxiation Hazard. Bending or attempting to install flexible pipe if it has been stored at ambient temperature below 41°F (5°C) will cause material to become brittle and lead to cracks, resulting in flue gas leaks.

Do not install flexible polypropylene pipe at an angle greater than 45 degrees from vertical plane when used for combustion product venting. Failure to do so will result in improper condensate drainage towards the boiler and possible subsequent vent pipe blockage.

e. When flexible polypropylene pipe (liner) is used for combustion product venting, it must not be installed at an angle greater than 45 degrees from vertical plane. This will insure proper condensate flow back towards the boiler.
f. When flexible polypropylene pipe (liner) is used for combustion air supply to a boiler, the pipe (liner) can be installed in vertical or horizontal position.
g. Follow flexible polypropylene pipe (liner) manufacturer specific installation instructions regarding application/ listing, permits, minimum clearances to combustibles, installation details (proper joint assembly, pipe support and routing, gasket and fitting installation, optional tooling availability/usage, routing through masonry combination of combustion product venting and combustion air supply).
h. When there is a conflict between flexible polypropylene pipe (liner) manufacturer installation instructions and these instructions, the more restrictive instructions shall govern.

6. Running Flexible Polypropylene Vent (Liner) Through Unused B-Vent Chase with integrated Intake Air

a. Models ALP080B through ALP285B are also listed for vertical venting by installing flexible vent in an UNUSED **B-Vent Chase** and supplying combustion air through B-vent flexible termination cap (terminal).
b. Refer to Figures 16C and 16D for details of B-Vent chase M&G/DuraVent or Centrotherm flexible vent with integrated air intake installation.
c. Refer to Z-Flex Z-Dens and Selkirk Polyflue catalogs for component selection to address flexible vent with integrated air intake installation.
d. All B-Vent joints must be sealed with RTV sealant (applicable to M&G/DuraVent).
e. Seal the flex male adapter to the inside of lower B-Vent adapter with RTV (applicable to M&G/DuraVent).
f. Seal the air intake pipe to the B-Vent cap with RTV (applicable to M&G/DuraVent).

D. Stainless Steel Venting

⚠ WARNING **Asphyxiation Hazard. Follow these instructions and the installation instructions included by the original stainless steel venting component manufacturers, Heat Fab, M&G/DuraVent or Z-Flex, whichever applicable. Failure to do so could cause products of combustion to enter the building, resulting in severe property damage, personal injury or death. Where a conflict arises between Heat Fab, M&G/DuraVent or Z-Flex instructions and these instructions, the more restrictive instructions shall govern.**

- **Do not mix vent components from listed manufacturers.**
- **Examine all components for possible shipping damage prior to installation.**
- **All condensate that forms in the vent must be able to drain back to the boiler.**

NOTICE **Do not exceed maximum vent/combustion air system length. Refer to "2. Vent/Combustion Air Piping" under "A. General Guidelines" in this section for maximum vent/combustion air system length.**

Use only vent and combustion air terminals and terminal locations shown in "3. Vent/Combustion Air Terminals" under "A. General Guidelines" of this section.

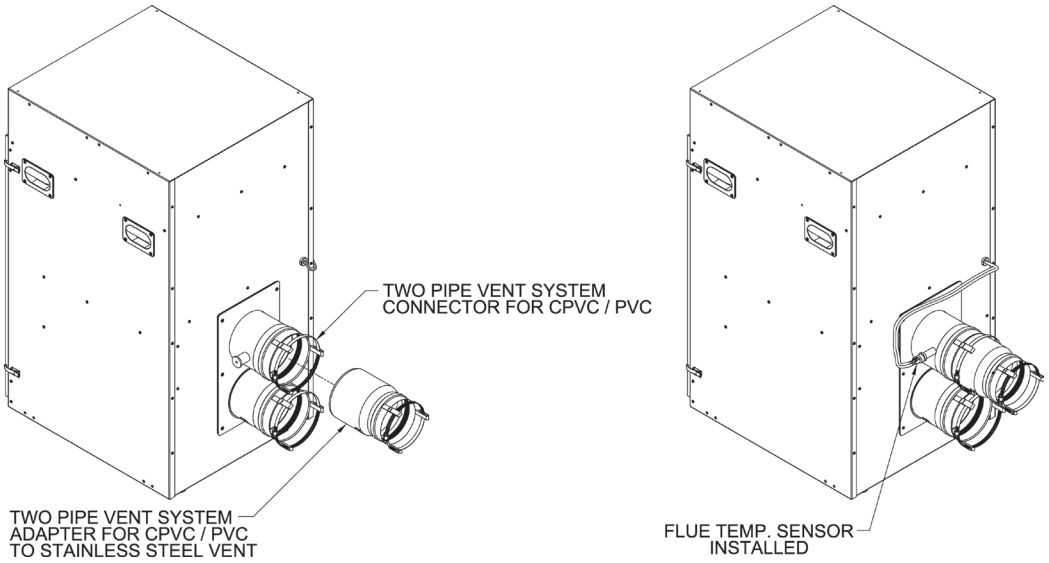

Figure 17: Field Installation of Two-Pipe Vent System Adapter for Stainless Steel

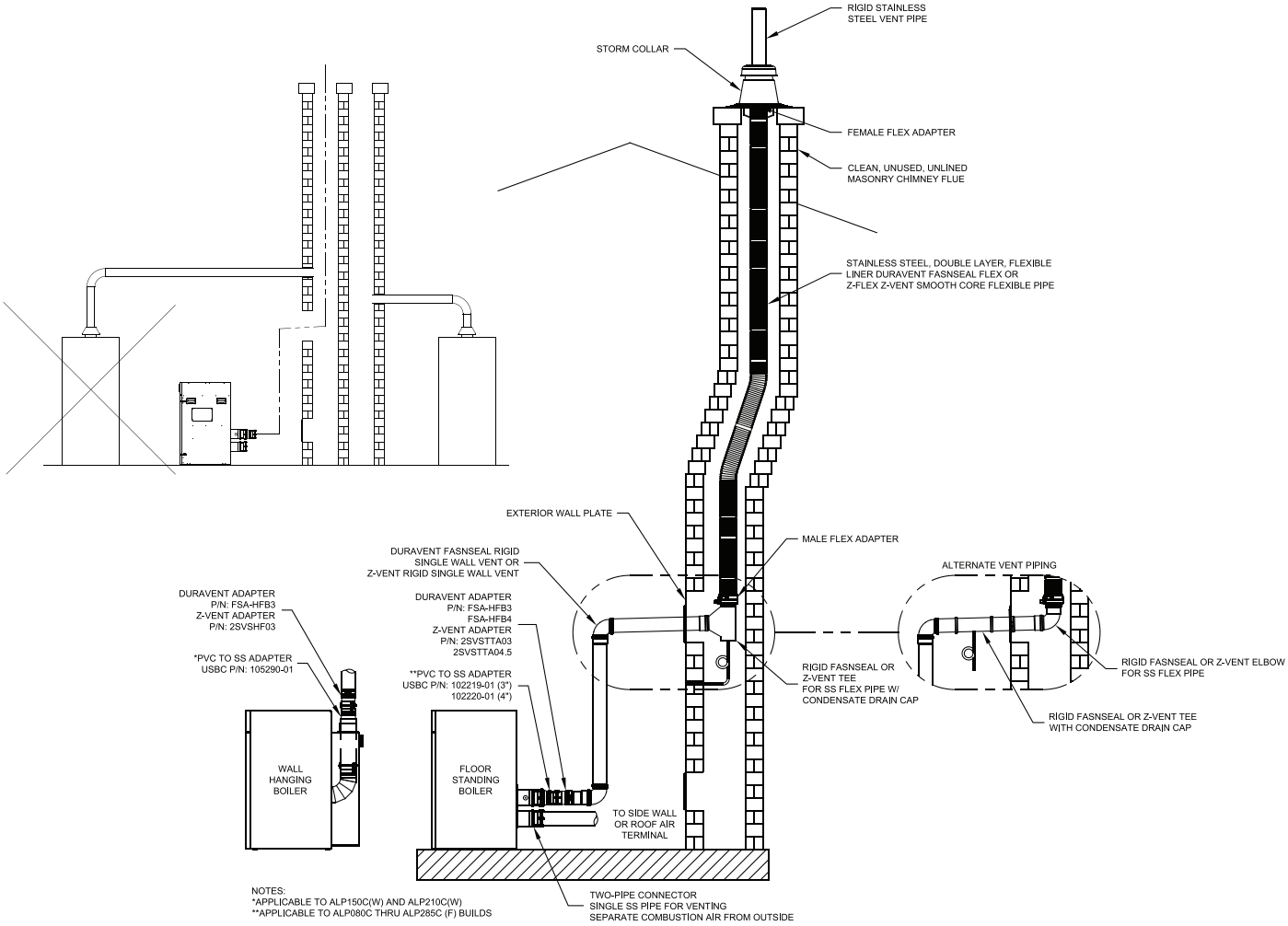

Figure 17A : Flexible Stainless Steel Vent in UNUSED Masonry Chimney with Separate Combustion Air Intake

Table 10A: U.S. Boiler Company Vent System Components (Stainless Steel)

Vent System Component	Part Numbers		Equivalent Feet of Pipe
	ALP080B - 210B	ALP285B	
	3" Vent	4" Vent	
SS Vent Kit	102501-01	102501-02	N/A
Horizontal Vent Terminal (Included in Kit)	8116310	8116313	
PVC to SS Vent Adapter (Included In Kit)	102219-01	102220-01	
Extended PVC to SS Vent Adapter (Wall Mounted Builds Only)	105290-01	N/A	N/A
Vertical Vent Terminal	102680-01	102680-02	N/A
Pipe x 1 Ft.	8116296U	100176-01	1
Pipe x 3 Ft.	8116298U	100177-01	3
Pipe x 5 Ft.	8116300U	100178-01	5
Pipe x Adjustable	8116319U	100179-01	Equal to Installed Length (1.06 to 1.64)
90° Elbow	8116294U	100180-01	5.5 (3") 8.0 (4")
45° Elbow	8116292U	100181-01	4.0 (3") 4.5 (4")
Horizontal Drain Tee	8116302U	100182-01	2
Vertical Drain Tee	8116304U	100183-01	7½
Single Wall Thimble	8116116	100184-01	N/A

Table 10B: Stainless Steel Vent Systems and Terminations (Installer Provided) Approved for Optional Horizontal or Vertical Termination

Manufacturer	Vent System	Nominal Diameter	Boiler Adapter	Horizontal Termination & Screen	Vertical Termination & Screen	Wall Thimble
M&G/DuraVent	FasNseal	2”	N/A	N/A	N/A	N/A
		3”	FSA-HFB3 (WALL MTD) FSA-PVC3 (FLOOR MTD)	FSELB9003 & FSBS3	FSVL (*) 03 & FSBS3	FSWT3
		4”	FSA-PVC4 (FLOOR MTD)	FSELB9004 & FSBS4	FSVL (*) 04 & FSBS4	FSWT4
Z-Flex Z-Vent™	SVE Series III, Z-Vent III	2”	N/A	N/A	N/A	N/A
		3”	2SVSHF03 (WALL MTD) 2SVSTTA03 (FLOOR MTD)	2SVSTPF03	2SVSTEX0390	2SVSWTF03
		4”	2SVSTTA04.5 (FLOOR MTD)	2SVSTPF04	2SVSTEX0490	2SVSWTF04

NOTE: See approved Manufacturer’s literature for other required component part numbers (straight pipe, elbows, firestops, vent supports etc.).

1. **Components**
   a. For use on models ALP080B through ALP285B, U.S. Boiler Company offers sizes 3 in. and 4 in. vent pipe and fittings shown in Table 10A. It is the responsibility of the installing contractor to procure stainless steel vent system pipe and related components.
   b. Alternate listed stainless steel vent system manufacturers and components are shown in Table 10B.
   c. Where the use of "silicone" is called for in the following instructions, use GE RTV 106 or equivalent for the vent collar. Seal galvanized combustion air piping sections with any general-purpose silicone sealant such as GE RTV102. Seal PVC combustion air piping sections with PVC cement.
   d. Do not drill holes in vent pipe.

2. **Field Installation of CPVC/PVC Two-Pipe Vent System Connector and PVC to Stainless Steel Adapter - Floor Mounted Boiler (F) Builds**
   a. Models ALP080B(F) through ALP285B(F): Install CPVC/PVC Two-Pipe vent system connector. Follow instructions in "2. Field Installation of CPVC/PVC Two-Pipe Vent System Connector" under "B. CPVC/PVC Venting." See also Figures 9 and 17.
   b. Apply provided dielectric grease (grease pouch taped to the vent system connector) all around to the vent or air connection inner red silicon gasket.
   c. Push and twist PVC to stainless steel adapter into two-pipe vent system connector vent or combustion air supply port until bottomed out. See Figure 17.
   d. Tighten the worm band clamp screw to secure PVC to stainless steel adapter.
   e. Do not install PVC to stainless steel adapter at the lower combustion air supply port of the two-pipe vent system connector when using PVC pipe for combustion air supply to boiler.

3. **Field Installation of PVC to Stainless Steel Adapter into 90° Vent Elbow – Wall Mounted Boiler (W) Builds**
   a. Models ALP080B (W) through ALP210B(W): Carefully insert extended PVC to stainless steel adapter (105290-01) from top through air collar plate assembly and plate gasket vent opening into boiler air box.
   b. Apply provided dielectric grease (grease pouch taped to the vent elbow) all around to the vent elbow inner red silicon gasket.
   c. Align the adapter end with the elbow inlet and slide it down with a slight twisting motion until the adapter lower end is firmly inserted into the elbow.
   d. Tighten the elbow worm band clamp screw to secure PVC to stainless steel adapter.
   e. Install PVC or galvanized steel pipe onto the air plate assembly combustion air inlet collar and seal around vent and air pipe with Sil-Bond RTV 4500 or equivalent caulk. See Figure 15A.

⚠ WARNING Failure to properly secure the vent adapter lower end into the elbow with the clamp could lead to property damage, personal injury or loss of life.

4. System Assembly

WARNING **Asphyxiation Hazard. Vent systems made by Heat Fab, M&G / DuraVent and Z-Flex rely on gaskets for proper sealing. When these vent systems are used, take the following precautions:**

- **Make sure that gasket is in position and undamaged in the female end of the pipe.**
- **Make sure that both the male and female pipes are free of damage prior to assembly.**
- **Only cut vent pipe as permitted by the vent manufacturer in accordance with their Instructions. When pipe is cut, cut end must be square and carefully de-burred prior to assembly.**

NOTICE **The venting system must be free to expand and contract and supported in accordance with installation instructions included by the original stainless steel venting component manufacturers, Heat Fab, M&G / DuraVent or Z-Flex, whichever applicable.**

a. Plan venting system to avoid possible contact with plumbing or electrical wires. Start at vent connector at boiler and work towards vent termination.

b. Follow all manufacturer instructions and warnings when preparing pipe ends for joining and when assembling the vent/ combustion air system.

c. On horizontal pipe sections, orient all welded seams at the 12:00 position. Do not place longitudinal welded seams at the bottom of horizontal sections of vent pipe.

d. Assemble the combustion air system using either galvanized or PVC pipe.

i. If PVC piping is used, use PVC cement to assemble the PVC intake system components. See “B. CPVC/ PVC Venting” for combustion air pipe installation instructions.

ii. If galvanized piping is used, use at least two sheet metal screws per joint. Seal outside of all joints

5. Horizontal Sidewall Vent Termination

a. Standard Two-Pipe Termination

See Figure 5.

i. Vent Termination

- Use a stainless steel coupling the horizontal position.

NOTICE **The joint between the terminal and the last piece of pipe must be outside of the building.**

- Male end of terminal will fit into female end of any of the listed stainless vent systems.
- Apply a heavy bead of silicone to the male end of the terminal before inserting it into the last piece of pipe. Orient the terminal so that the seam in the terminal is at 12:00.
- Smooth the silicone over the seam between the terminal and the last piece of pipe, applying additional silicone if necessary to ensure a tight seal.
- Allow the silicone to cure per the silicone manufacturer’s instructions before operating the boiler.

ii. Combustion Air Termination

- Use an elbow in the downright position. Elbow should protrude the same distance from the wall as the exhaust terminal as shown in Figure 5.
- Install a rodent screen (not supplied) in the inlet terminal. Use a screen having 1/2 in. x 1/2 in. (13 mm x 13 mm) mesh.

b. Optional Two-Pipe Snorkel Termination

See Figures 6A and 6B.

This installation will allow a maximum of 7 ft. (2.1 m) vertical exterior run of the vent/ combustion air piping to be installed on the approved AL29-4C stainless steel horizontal venting application.

i. Vent Termination

- After penetrating wall, install the appropriate manufacturer’s 90° elbow so that the elbow leg is in the up direction.
- Install maximum vertical run of 7 ft. (2.1 m) of appropriate manufacturer’s vent pipe as shown in Figure 6A.

- At top of vent pipe length install another appropriate manufacturer's 90° elbow so that the elbow leg is opposite the building's exterior surface.
- Install horizontal vent terminal coupling.
- Brace exterior piping if required.

ii. Combustion Air Termination

- After penetrating wall, install a 90° elbow so that the elbow leg is in the up direction.
- Install maximum vertical run of 7 ft. (2.1 m) of combustion air pipe as shown in Figure 6B.
- At top of vent pipe length install another 90° elbow so that the elbow leg is opposite the building's exterior surface.
- Install rodent screen (not supplied) and horizontal air terminal (elbow).
- Brace exterior piping if required.

6. Vertical Vent Termination

a. Standard Two-Pipe Termination

See Figures 7 and 8.

i. Vent Termination

- Use the terminal supplied by the vent system manufacturer shown in Table 10B. Follow manufacturer's instructions to attach terminal to vent system.

ii. Combustion Air Termination

- Install vertical combustion air terminal. Vertical combustion air terminal consists of a 180° bend (comprised of two 90° elbows) as shown in Figure 7A.
- Install rodent screen (not supplied) in the combustion air terminal. Use a screen having 1/2 in. x 1/2 in. (13 mm x 13 mm) or larger mesh.

7. Running Flexible Stainless Steel Vent (Liner) Through Unused Chimney or Chase

a. Models ALP080B through ALP285B are listed for vertical venting by installing flexible stainless steel vent (M&G/ DuraVent FlexNSeal brand) in an UNUSED masonry chimney/chase and supplying combustion air through a separate wall or roof combustion air terminal. The unused chimney flue must be structurally sound and in good repair.

b. Refer to Figure 17A for details of chimney chase installation.

c. When flexible stainless steel pipe (liner) is used for combustion product venting, it must be installed at vertical or near vertical plane. This will insure proper condensate flow back towards the boiler.

d. Follow flexible stainless steel pipe (liner) manufacturer specific installation instructions regarding application/ listing, permits, minimum clearances to combustibles, installation details (proper joint assembly, pipe support and routing, gasket and fitting installation, optional tooling availability/usage, routing through masonry combination of combustion product venting and combustion air supply).

e. When there is a conflict between flexible stainless steel pipe (liner) manufacturer installation instructions and Alpine boiler Installation, Operating and Service Instructions, the more restrictive instructions shall govern.

E. Removing the Existing Boiler

When an existing boiler is removed from a common venting system, the common venting system is likely to be too large for proper venting of the remaining appliances. At the time of removal of an existing boiler, the following steps shall be followed with each appliance remaining connected to the common venting system placed in operation, while the other appliances remaining connected to the common venting system are not in operation.

1. Seal any unused openings in the common venting system.
2. Visually inspect the venting system for proper size and horizontal pitch and determine there is no blockage or restriction, leakage, corrosion, and other deficiencies which could cause an unsafe condition.
3. Insofar as is practical, close all building doors and windows and all doors between the space in which the appliances remaining connected to the common venting system are located and other spaces of the building. Turn on clothes dryers and any appliance not connected to the common venting system. Turn on any exhaust fans, such as range hoods and bathroom exhausts, so they will operate at maximum speed. Do not operate a summer exhaust fan. Close fireplace dampers.
4. Place in operation the appliance being

WARNING **Asphyxiation Hazard. Flexible stainless steel vent must be installed only in an UNUSED chimney flue. A chimney flue is considered UNUSED when it is not being used for any appliance venting. Where one of the multiple flues is being used for an appliance venting, the flexible stainless vent installation is permitted through an adjacent unused flue providing a local authority having jurisdiction approves such installation.**

Asphyxiation Hazard. Flexible stainless steel pipe (liner) must be installed at vertical or near vertical plane when used for combustion product venting. Failure to do so will result in improper condensate drainage towards the boiler and possible subsequent vent pipe blockage.

inspected. Follow the Lighting (or Operating) Instructions. Adjust thermostat so appliance will operate continuously.

5. Test for spillage at the draft hood relief opening after 5 minutes of main burner operation. Use the flame of a match or candle, or smoke from a cigarette, cigar or pipe.
6. After it has been determined that each appliance remaining connected to the common venting system properly vents when tested as outlined above, return doors, windows, exhaust fans, fireplace dampers and any other gas-burning appliance to their previous conditions of use.
7. Any improper operation of the common venting system should be corrected so the installation conforms with the *National Fuel Gas Code,* ANSI Z223.1/NFPA 54 and/or the *Natural Gas and Propane Installation Code,* CAN/CSA B149.1. When resizing any portion of the common venting system, the common venting system should be resized to approach the minimum size as determined using the appropriate tables in Chapter 13 in the *National Fuel Gas Code*, ANSI Z223.1/NFPA 54 and/or the *Natural Gas and Propane Installation Code*, CAN/CSA B149.1.

Au moment du retrait d'une chaudière existante, les mesures suivantes doivent être prises pour chaque appareil toujours raccordé au système d'évacuation commun et qui fonctionne alors que d'autres appareils toujours raccordés au système d'évacuation ne fonctionnent pas:

1. Sceller toutes les ouvertures non utilisées du système d'évacuation.
2. Inspecter de façon visuelle le système d'évcuation pour déterminer la grosseur et l'inclinaison horizontale qui conviennent et s'assurer que le système est exempt d'obstruction, d'étranglement, de fuite, de corrosion et autres défaillances qui pourraient présenter des risques.
3. Dans la mesure du possible, fermer toutes les portes et les fenêtres du bâtiment et toutes les portes entre l'espace où les appareils toujours raccordés au système d'évacuation sont installés et les autres espaces du bâtiment. Mettre en marche les sécheuses, tous les appareils non raccordés au système d'évacuation commun et tous les ventilateurs d'extraction comme les hottes de cuisinière et les ventilateurs des salles de bain. S'assurer que ces ventilateurs fonctionnent à la vitesse maximale. Ne pas faire fonctionner les ventilateurs d'été. Fermer les registres des cheminées.
4. Mettre l'appareil inspecté en marche. Suivre les instructions d'allumage. Régler le thermostat de façon que l'appareil fonctionne de façon continue.
5. Faire fonctionner le brûleur principal pendant 5 min ensuite, déterminer si le coupe-tirage déborde à l'ouverture de décharge. Utiliser la flamme d'une allumette ou d'une chandelle ou la fumée d'une cigarette, d'un cigare ou d'une pipe.
6. Une fois qu'il a été déterminé, selon la méthode indiquée ci-dessus, que chaque appareil raccordé au système d'évacuation est mis à l'air libre de façon adéquate. Remettre les portes et les fenêtres, les ventilateurs, les registres de cheminées et les appareils au gaz à leur position originale.
7. Tout mauvais fonctionnement du système d'évacuation commun devrait être corrigé de façon que l'installation soit conforme au National Fuel Gas Code, ANSI Z223.1/NFPA 54 et (ou) aux codes d'installation CAN/CSA-B149.1. Si la grosseur d'une section du système d'évacuation doit être modifiée, le système devrait être modifié pour respecter les valeurs minimales des tableaux pertinents de l'appendice F du National Fuel Gas Code, ANSI Z223.1/NFPA 54 et (ou) des codes d'installation CAN/CSA-B149.1.

F. Multiple Boiler Installation Venting

WARNING **Asphyxiation Hazard. No common manifold venting (vent piping and vent terminals) is permitted.**

NOTICE **Installing multiple individual boiler vent terminations too close together may result in combustion product water vapor condensation on building surfaces, where vent terminations are placed, and subsequent frost damage. To avoid/minimize frost damage, extend the distance from building surfaces to vent termination end and increase the horizontal distance between adjacent vent terminations.**

1. Vent Piping and Terminations

a. Multiple boiler vent terminations are shown in Figure 18.

b. Each individual boiler must have its own vent pipe and vent terminal. Refer to Paragraphs A through E (as applicable) for individual boiler vent guidelines and options.

c. Do not exceed the individual boiler maximum vent length listed in Table 5A.

d. For horizontal sidewall terminations, maintain at least 12 in. (300 mm) minimum horizontal distance between any adjacent individual boiler vent terminations. Additional horizontal spacing between any adjacent individual boiler vent terminations as well as extending the distance from building surfaces to vent termination end are recommended to avoid frost damage to building surfaces where vent terminations are placed.

e. Individual boiler sidewall vent terminals must be placed at least 12 in. (300 mm) [18 in. (460 mm) in Canada] above the ground plus the expected snow accumulation.

f. Multiple individual boiler vertical vent pipes may be piped through a common conduit or chase so that one roof penetration may be made.

g. For vertical roof terminations, maintain at least 12 in. (300 mm) minimum horizontal distance between adjacent individual boiler vent terminations.

2. Combustion Air Piping

a. Multiple boiler combustion air terminations are shown in Figure 18.

b. Each individual boiler must have own combustion air pipe and terminal. Refer to Paragraphs A through E (as applicable) for individual boiler combustion air guidelines and options.

c. Do not exceed the individual boiler maximum combustion air pipe length listed in Table 5A.

d. If possible, locate vent and combustion air terminals for an individual boiler on the same wall to prevent nuisance shutdowns. If not, an individual boiler may be installed with a roof vent terminal and sidewall combustion air terminal.

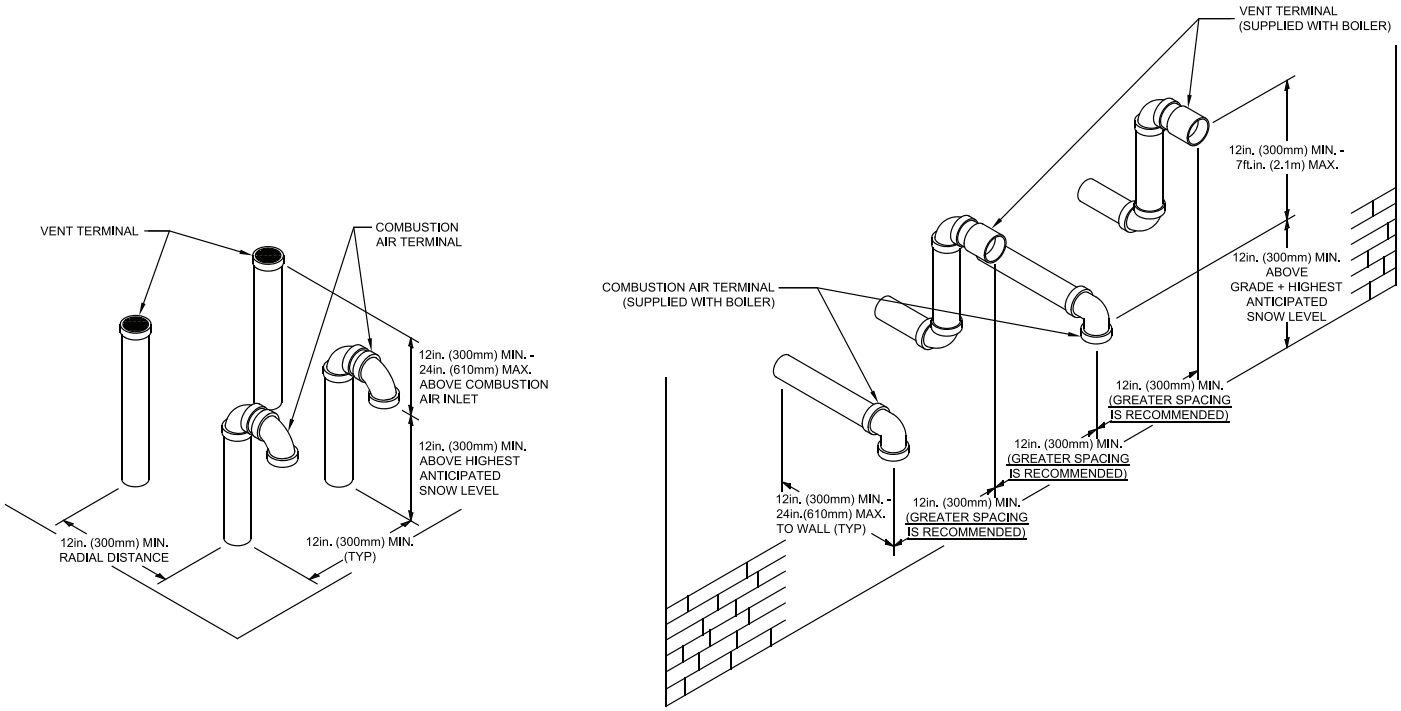

Figure 18: Multiple Boiler Direct Vent and Air Intake Terminations

V. Condensate Disposal

A. Condensate Trap and Drain Line

1. All condensate which forms in the boiler or vent system collects in the sump under heat exchanger and leaves the boiler through factory installed condensate trap.
2. The trap allows condensate to drain from sump while retaining flue gases in the boiler. The trap has factory installed overflow switch, which shuts down the boiler in the event the drain line becomes obstructed, preventing proper condensate removal. Refer to Section XI "Service and Maintenance" for condensate trap and condensate overflow switch removal and replacement procedure, if required.
3. Note the following when disposing of the condensate:
   a. Condensate is slightly acidic, typical pH around 3.5 - 4.5. Do not use metallic pipe or fittings in the condensate drain line. Do not route the drain line through areas that could be damaged by leaking condensate.
   b. Do not route or terminate the condensate drain line in areas subject to freezing temperatures.
   c. If the point of condensate disposal is above the trap, a condensate pump is required to move the condensate to the drain. Select a condensate pump approved for use with condensing furnaces. If overflow from the pump would result in property damage, select a pump with an overflow switch. Wire this switch in series with installer provided external high limit, to shut off the boiler, and, if desired, in series with installer- supplied alarm, to trigger an alarm in the event of overflow.
   d. Do not attempt to substitute another trap for one provided with the boiler.
   e. In order for boiler to work properly, the boiler must be leveled during installation.
4. The condensate trap connection is located at boiler left side, below inlet and outlet water pipe connections. Refer to Figures 1A, 1B, 1C and 19.
5. Condensate trap must be filled up with water, prior to boiler start-up and before connecting any condensate line to the boiler to insure combustion products cannot escape from operating boiler. To fill the trap, inject water in the amount of 1 cup (240ml) through condensate trap connection. Do not overfill the trap.
6. Install tee for condensate overflow and vent as shown in Figure 19.

⚠ WARNING Asphyxiation Hazard. Failure to fill the condensate trap with water prior to boiler start-up could cause flue gas to enter the building, resulting in personal injury or death.

7. If any additional condensate drain line is needed, construct the extension from PVC or CPVC Schedule 40 pipe. The factory supplied ¾ in. x 5-5/8 in. long PVC coupling, located in the miscellaneous parts carton, must be used to connect drain line to the condensate trap. Do not over tighten coupling compression nuts when connecting drain line and condensate trap.
8. Size condensate drain line, pump and neutralizer (if using other than manufacturer neutralizer kit) to accommodate maximum condensate flow shown in Table 11 "Maximum Condensate Flow".

⚠ WARNING Asphyxiation Hazard. Failure to install the condensate drain in accordance with the above instructions could cause flue gas to enter the building, resulting in personal injury or death.

***NOTICE* Boiler condensate is corrosive. Route condensate drain line in a manner such that any condensate leakage will not cause property damage.**

- **Some jurisdictions may require that condensate be neutralized prior to disposal.**
- **Use materials approved by the authority having jurisdiction.**

B. Condensate Neutralizer Installation

1. Some jurisdictions may require that the condensate be neutralized before being disposed of. Follow local codes pertaining to condensate disposal.
2. A condensate neutralizer kit (P/N 101867-01) is available as optional equipment. Follow local codes and instructions enclosed with the kit for condensate neutralizer installation.

3. Limestone chips will get coated by neutral salts (product of chemical reaction between limestone and acidic condensate) and lose neutralizing effectiveness over time. Therefore, periodic condensate neutralizer maintenance and limestone chip replacement must be performed. A pH test or acid test kits are available from HVAC/plumbing distributors and should be used to measure condensate acidity before/after neutralizer thus indicating a need for service and chip replacement.

Table 11: Maximum Condensate Flow

Boiler Model	*Maximum Condensate Flow, GPH
ALP080B	0.9
ALP105B	1.2
ALP150B	1.7
ALP210B	2.4
ALP285B	3.2

*Assumes 100% of water in fuel condenses.

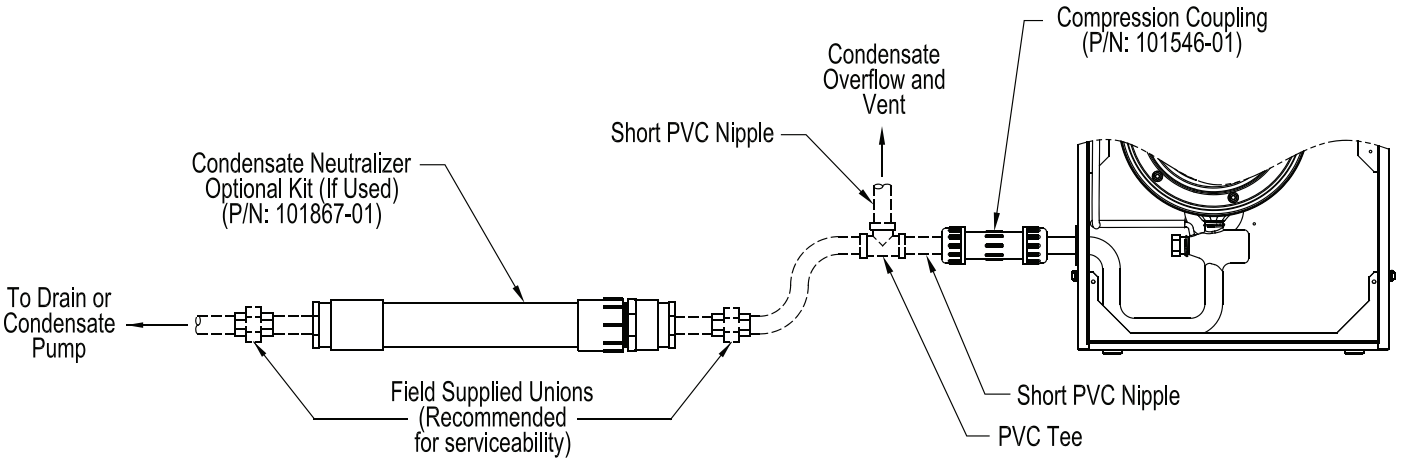

Dashed line parts are field supplied.

Figure 19: Condensate Trap and Drain Line

NOTICE **Failure to properly pipe boiler may result in improper operation and damage to boiler or structure.**

Install boiler so that the gas ignition system components are protected from water (dripping, spraying, rain, etc.) during appliance operation and service (circulator replacement, etc.).

Oxygen contamination of boiler water will cause corrosion of iron and steel boiler components, and can lead to boiler failure. U.S. Boiler Company' s Standard Warranty does not cover problems caused by oxygen contamination of boiler water or scale (lime) build-up caused by frequent addition of water.

Do not fill boiler with softened water to prevent chloride contamination.

Installation is not complete unless a safety relief valve is installed into the tapping located on left side of appliance or the supply piping.

A. Installation of Factory Supplied Piping and Trim Components

Alpine boilers have factory supplied Miscellaneous Part Carton (P/N 102942-01 – ALP080B through ALP210B; 102942-02 or 103676-01 – ALP285B), which includes supply piping components, gas piping components, Temperature & Pressure Gauge, Pressure Relief Valve and Drain Valve. See Figure 20 "Factory Supplied Piping and Trim Installation". Install these components prior to connecting boiler to system piping as follows:

1. Relief Valve Piping, ALP080B through ALP210B Boiler Models

a. Locate and remove ¾ in. NPT x close black nipple, ¾ in. NPT black tee, ¾ in. MPT x ¾ in. FPT Pressure Relief Valve, ¾ in. NPT Drain Valve.

b. Install close nipple into tee branch, then, screw the assembly into boiler left side front ¾ in. tapping making sure tee run outlets are in vertical plane and parallel to boiler side.

c. Mount ¾ in. MPT x ¾ in. FPT Pressure Relief Valve into the tee top outlet.

d. Install Drain Valve into the tee bottom outlet.

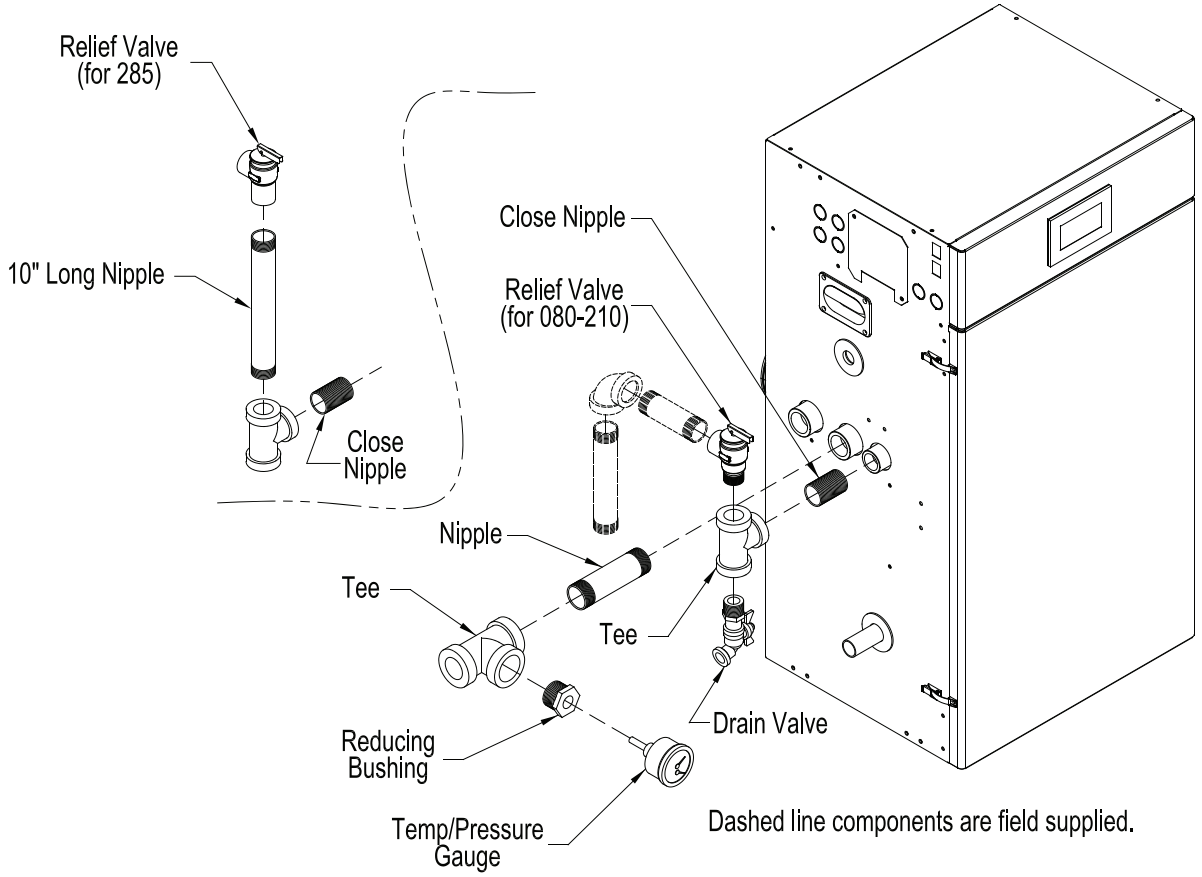

Figure 20: Factory Supplied Piping and Trim Installation

2. **Relief Valve Piping, ALP285B Boiler Model**
   a. Locate and remove (1) ¾ in. NPT x close black nipple, (1) ¾ in. NPT x 10 in. black nipple, ¾ in. NPT black tee, ¾ in. FPT x ¾ in. FPT Pressure Relief Valve, ¾ in. NPT Drain Valve.
   b. Install close nipple into tee branch, then, screw the assembly into boiler left side front ¾ in. tapping making sure tee run outlets are in vertical plane and parallel to boiler side.
   c. Install the ¾ in. NPT x 10 in. black nipple into tee run top outlet.
   d. Mount ¾ in. FPT x ¾ in. FPT Pressure Relief Valve onto the 10 in. nipple.
   e. Install Drain Valve into the tee bottom outlet.
3. **Temperature /Pressure Gauge Piping, ALP080B through ALP210B Boiler Models**
   a. Locate and remove 1 in. NPT x 4 in. long black nipple, 1 in. x 1 in. x 1 in. NPT black tee, 1 in. x ¼ in. NPT black reducing bushing and Temperature & Pressure Gauge.
   b. Mount the nipple into 1 in. boiler supply tapping (see Figures 1A and 1B), then, install the tee onto the nipple, making sure 1 in. branch outlet is in horizontal plane and facing the boiler front.
   c. Install 1 in. x ¼ in. NPT black reducing bushing into the tee branch, then, put in Temperature & Pressure Gauge.
4. **Temperature /Pressure Gauge Piping, ALP285B Boiler Model**
   a. Locate and remove 1¼ in. NPT x 2 in. long black nipple, 1¼ in. x 1¼ in. x ¾ in. NPT black tee, ¾ in. x ¼ in. NPT black reducing bushing and Temperature & Pressure Gauge.
   b. Mount the nipple into 1¼ in. boiler supply tapping (see Figures 1B and 1C), then, install the tee onto the nipple, making sure ¾ in. branch outlet is in horizontal plane and facing the boiler front.
   c. Install ¾ in. x ¼ in. NPT black reducing bushing into the tee branch, then, put in Temperature & Pressure Gauge.

B. Piping System To Be Employed.

Alpine boilers are designed to operate in a closed loop pressurized system. Minimum pressure in the boiler must be 14.5 PSI (100 kPa). Proper operation of the Alpine boiler requires that the water flow through the boiler remain within the limits shown in Table 14, any time the boiler is firing.

NOTICE **Failure to maintain the flow through boiler within specified limits could result in erratic operation or premature boiler failure.**

1. **Near boiler piping must isolate ALP boiler from system piping via closely spaced tees** to insure specified flow range through boiler any time the boiler is firing:
   a. The flow rate through the isolated near-boiler loop is maintained by factory recommended and installer supplied boiler circulator.
   b. The flow rate through the isolated near-boiler loop is **completely independent** of the flow rate through the heating system loop(s).
   c. The flow rate through the heating system loop(s) is controlled by installer sized/provided system loop circulator(s).
   d. This piping arrangement can be used either for space heating-only applications or space heating with indirect water heater(s) applications.
      i. **Space heating only** - refer to Table 13 and Figure 21 “Near Boiler Piping - Heating Only” as applicable.
      ii. **Space heating plus indirect water heater**(s) - refer to Table 13 and Figure 22 “Near Boiler Piping - Heating Plus Indirect Water Heater” as applicable.

NOTICE **Where it is not possible to install a separate boiler loop, the system circulator must be sized to ensure that the flow through boiler stays within the defined parameters to prevent overheating when the boiler is fired at it’s full rated input. Install a flow meter to measure the flow, or fire the boiler at full rate and ensure the boiler DT does not exceed 35°F (19°C).**

2. **Direct connection of Alpine boiler to heating system**, similar to a conventional boiler, is NOT RECOMMENDED because:
   a. The flow rate through system must be the same as through boiler and fall within limits specified in Table 14.
   b. Pressure drop through entire system must be known, added to pressure drop through boiler, and, a circulator selected to provide required flow at total calculated pressure drop.
   c. It is often very difficult to accurately calculate the pressure drop through the system.

d. In replacement installations, it may be nearly impossible to get an accurate measurement of piping amount and number of fittings in the system. If system is zoned, the system flow rate may drop well below recommended minimum flow when only a single zone is calling for heat.

3. **Alpine boiler models ALP080B through ALP285B are factory supplied with circulators,** which were sized for near-boiler piping equivalent length of 50 ft. and listed temperature differential. See Table 13 for details.

   It is the installer's responsibility to insure a proper installation and where applicable, proper circulator speed setting for the boiler circulator to achieve a required flow rate. Where near-boiler piping exceeds 50 equivalent feet, alternate circulator selection may be required.

The 10th digit of the Alpine boiler part number indicates the brand of boiler circulator included with the boiler. A "T" in the 10th digit of the part number indicates a Taco circulator; a "G" indicates a Grundfos circulator.

Example:

Boiler part number: ALP105BW-2T02 indicates Alpine boiler equipped with Taco Circulator

Boiler part number: ALP105BW-2G02 indicates Alpine boiler equipped with Grundfos Circulator

Table 12: Flow Range Requirement Through Boiler

Boiler Model	Boiler Supply Connection, Inch, FPT	Boiler Return Connection, Inch, FPT	Minimum Required Flow (GPM) @ 35°F ΔT	Boiler Head Loss, Ft. @ 35°F ΔT	Required Flow, (GPM) @ 30°F ΔT	Boiler Head Loss, Ft. @ 30°F ΔT	Required Flow, (GPM) @ 25°F ΔT	Boiler Head Loss, Ft. @ 25°F ΔT	Maximum Required Flow (GPM) @ 20°F ΔT	Boiler Head Loss, Ft. @ 20°F ΔT
ALP080B	1	1	4.2	4.8	4.9	6.4	5.8	8.9	7.3	13.4
ALP105B	1	1	5.5	7.0	6.4	9.3	7.7	12.8	9.6	19.1
ALP150B	1	1	7.9	5.2	9.2	6.6	11.0	8.9	13.8	12.7
ALP210B	1	1	11.1	5.4	12.9	7.1	15.5	9.8	19.4	14.4
ALP285B	1¼	1¼	15.1	5.9	17.7	7.8	21.2	10.7	26.5	16.0

Notes: Required Flow (GPM) = ** Output (MBH) x 1000/500 x ΔT

** Output (MBH) - Select Value for specific Boiler Model from Table 2. See also Table 13 for near boiler piping sizing. Using boiler antifreeze will result in higher fluid density and may require larger circulators.

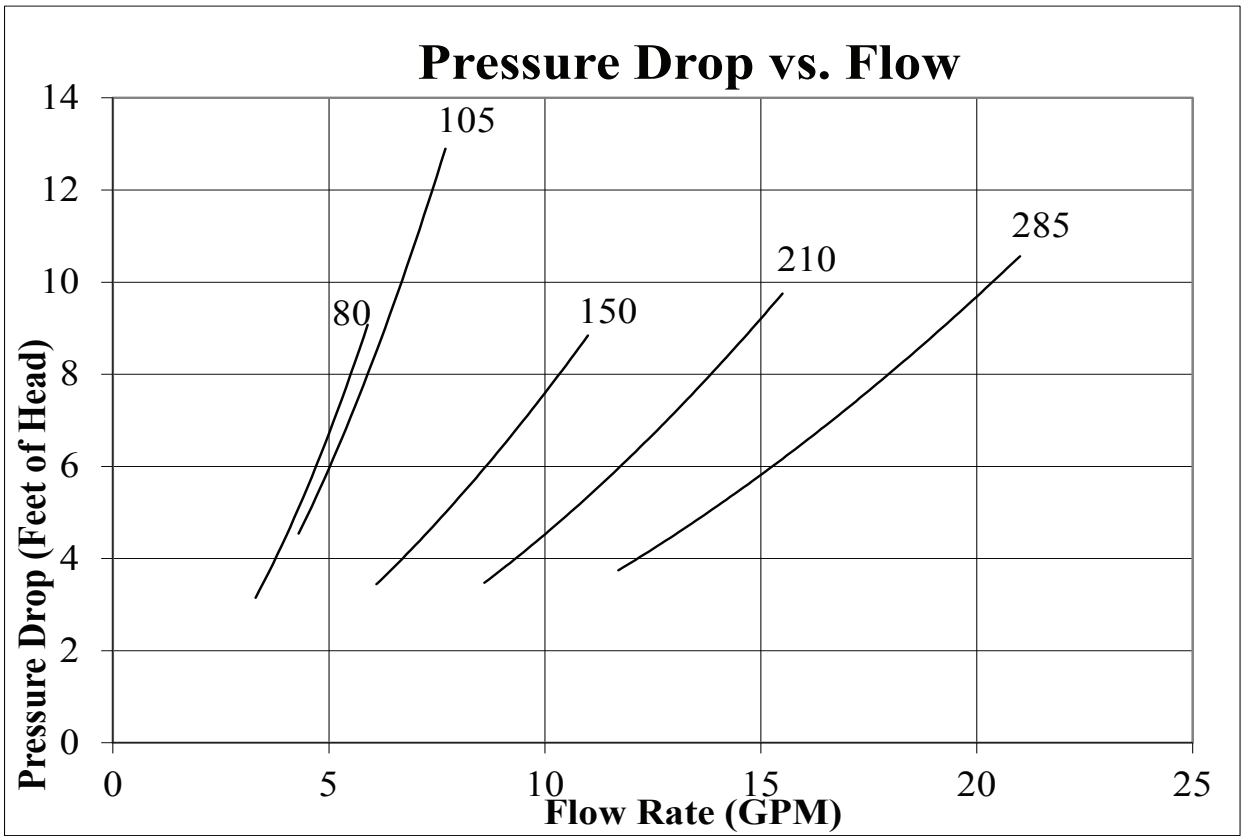

Table 13: Recommended Circulators for 50 ft. Equivalent ft. Near Boiler Piping [Approximately 20 ft. Straight Pipe, (4) 90° Elbows, and (2) Full Port Ball Valves]

Boiler Model	Boiler Supply Connection, Inch, FPT	Boiler Return Connection, Inch, FPT	Near-Boiler Piping Supply Pipe Size, Inch	Near-Boiler Piping Return Pipe Size, Inch	Flow, GPM @ 25°F Temp. Differential	Combined Boiler & Piping Loop Head Loss, Ft.	Recommended Circulator Make & Model
ALP080B	1	1	1	1	7.3 (1)	14.7	Taco 0015 (Speed 3) Grundfos UPS 15-58 (Speed 2)
ALP105B	1	1	1	1	7.7	14.3	Taco 0015 (Speed 3) Grundfos UPS 26-99 (Speed 1)
ALP150B	1	1	1	1	11.0	11.7	Taco 0015 (Speed 3) Grundfos UP 26-99 (Speed 2)
ALP210B	1	1	1¼	1¼	15.5	11.7	Taco 0014 Grundfos UP 26-99 (Speed 2)
ALP285B	1¼	1¼	1½	1½	21.5	12.3	Taco 0011 Grundfos UP 26-99 (Speed 3)

Notes:

(1) Temperature Differential = 20°F

All Circulators shown are not equipped with internal flow check valve (IFC).

When selecting Circulators other than recommended, contact Circulator Manufacturer for sizing information.

Near-Boiler Piping Size shown is based on 2 to 5.5 Ft/Sec. velocity range to avoid potential noise and pipe erosion.

C. Standard Installation Requirements

Observe the following guidelines when making the actual installation of the boiler piping:

1. **Safety Relief Valve (Required)** - The relief valve is packaged loose with boiler and must be installed in the location shown in Figure 20 "Factory Supplied Piping and Trim Installation". The relief valve must be installed with spindle in vertical position. Installation of the relief valve must comply with ASME Boiler and Pressure Vessel Code, Section IV. The standard factory shipped relief valve is rated for 30 PSI maximum working pressure for ALP080B through ALP285B. Optional 50 PSI, 80 PSI and 100 PSI maximum working pressure rated relief valves are available. If the valve is to be replaced, the replacement valve must have a relief capacity equal or exceeding the boiler DOE Heating Capacity (models ALP080B through ALP285B). Pipe the relief valve discharge to a location where hot water or steam will not create hazard or property damage if the valve opens. The end of the discharge pipe must terminate in an unthreaded pipe. If the relief valve is not piped to a drain, it must terminate at least 6" above the floor. Do not run relief valve discharge piping through an area prone to freezing. The termination of discharge piping must be in an area where it will not become plugged by debris.

⚠ CAUTION **Burn Hazard. Safety relief valve discharge piping must be piped such that the potential of severe burns is eliminated. DO NOT pipe in any area where freezing could occur. DO NOT install any shut-off valves, plugs or caps. Consult local codes for proper discharge piping arrangement.**

2 **Circulator (Required)** – Usually at least two circulators will be required to properly install a Alpine™ Series boiler. See Paragraph B above for information on sizing the circulators.

3. **Expansion Tank (Required)** – If this boiler is replacing an existing boiler with no other changes in the system, the old expansion tank can generally be reused. If the expansion tank must be replaced, consult the expansion tank manufacturer's literature for proper sizing.

4. **Fill Valve (Required)** – Either manual (recommended) or automatic fill valve may be used. However, if automatic refill is employed, a water meter must be added to evaluate the makeup water volume taken after initial fill and eliminate any water leakage as early as possible.

5. **Automatic Air Vent (Required)** –At least one automatic air vent is required. Manual vents will usually be required in other parts of the system to remove air during initial fill.

6. **Manual Reset High Limit (Required by some Codes)** – This control is required by ASME CSD-1
and some other codes. Install the high limit in the boiler supply piping just above the boiler with no intervening valves. Set the manual reset high limit to 200°F. Wire the limit per Figures 27 and 28 in Section VIII Electrical.
7. **Flow Control Valve (Strongly Recommended)** – The flow control valve prevents flow through the system unless the circulator is operating. Flow control valves are used to prevent gravity circulation or "ghost flows" in circulator zone systems through zones that are not calling for heat.
8. **Y-strainer (Recommended)** – A Y-strainer or equivalent strainer removes heating system debris from hydronic systems and protects boiler heat exchanger from fouling up. Install the strainer downstream of full port isolation valve, at the inlet side of the circulator, for easy service.
9. **Isolation Valves (Strongly recommended)** – Isolation valves are useful when the boiler must be drained, as they will eliminate having to drain and refill the entire system.
10. **Drain Valve (Required)** – Drain valve is packaged loose with boiler and must be installed in the location shown in Figure 20 "Factory Supplied Piping and Trim Installation" of the Installation, Operating and Service Instructions.
11. **Low Water Cutoff.** A hot water boiler installed above radiation level, or as required by the Authority having Jurisdiction, must be provided with a low water cutoff device at time of boiler installation.
    a. Automatic Reset LWCO with harness, Part Number 100592-01.
       - Install as shown in Figure 21, 22, 24B or 25B.
       - Wire using harness provided with low water cutoff per Figures 27 and 28.
    b. Manual Reset LWCO, Part Number 80160718.
       - Install as shown in Figure 21, 22, 24B or 25B.
       - Wire with field-sourced wiring per Figures 27 and 28.

Table 14: Fitting and Valve Equivalent Length

Copper Fitting and Sweat Valve Equivalent Length (Ft)				
Fitting or Valve Description	**Copper Pipe or Valve Size**			
	1	**1¼**	**1½**	**2**
90° Elbow	2.5	3.0	4.0	5.5
45° Elbow	1.0	1.2	1.5	2.0
Tee (through flow)	0.5	0.6	0.8	1.0
Tee (Branch flow)	4.5	5.5	7.0	9.0
Diverter Tee (typical)	23.5	25.0	23.0	23.0
Gate Valve	0.3	0.4	0.5	0.7
Globe Valve	25.0	36.0	46.0	56.0
Angle Valve	5.3	7.8	9.4	12.5
Ball Valve (standard port)	4.3	7.0	6.6	14.0
Ball Valve (full port)	1.9	1.4	2.2	1.3
Swing Check Valve	4.5	5.5	6.5	9.0
Flow-Check Valve (typical)	54.0	74.0	57.0	177.0
Butterfly Valve	2.7	2.0	2.7	4.5

Table 14: Fitting and Valve Equivalent Length (continued)

Threaded Fitting and Valve Equivalent Length (Ft)				
Fitting or Valve Description	**Black Threaded Pipe or Valve Size**			
	1	**1¼**	**1½**	**2**
90° Elbow	2.6	3.5	4.0	5.2
Long Radius Elbow (45° or 90°)	1.4	1.8	2.2	2.8
Tee (through flow)	1.8	2.3	2.7	3.5
Tee (Branch flow)	5.3	6.9	8.1	10.0
Close Return Bend	4.4	5.8	6.7	8.6
Gate Valve (full open)	0.7	0.9	1.1	1.4
Globe Valve (full open)	30.0	39.0	46.0	59.0
Angle Valve (full open)	13.0	17.0	20.0	26.0
Swing Check Valve (full open)	8.7	12.0	13.0	17.0
Flow-Check Valve (typical)	42.0	60.0	63.0	83.0

NOTE: Table 14 is provided as reference to assist in piping design and specifies equivalent length of typical piping fittings and valves.

NOTICE **The Alpine boiler heat exchanger is made from stainless steel tubular coil having relatively narrow waterways. Once filled with water, it will be subject to the effects of corrosion. Failure to take the following precautions to minimize corrosion and heat exchanger waterways overheating could result in severe boiler damage.**

- **Before connecting the boiler, insure the system is free of impurities, grease, sediment, construction dust, sand, copper dust, flux and any residual boiler water additives. Flush the system thoroughly and repeatedly, if needed, with clear water mixed with concentrated rinse agent to remove these contaminants completely.**
- **Iron oxide (red oxide sludge Fe_2O_3) is produced during oxygenation. To minimize any oxygen presence in the system, the system must be air free and leak tight. Do not connect the boiler to radiant tubing without an oxygen barrier. Using automatic water refill is not recommended, however, if such refill is employed, a water meter must be added to evaluate the makeup water volume taken after initial fill and eliminate any water leakage as early as possible.**
- **Maintain the water pressure in the boiler at a minimum of 14.5 psi (100 kPa).**
- **The boiler water pH must be within 7.5 < pH < 9.5. If the system contains any aluminum components, pH must be less than 8.5.**
- **Black oxide sludge (magnetite Fe_3O_4) forms as the result of continuous electrolytic corrosion in any system not protected by an inhibitor.**
- **Scale deposit is made up of lime scale contained in most distributed water and settles over the warmest surfaces of boiler heat exchanger causing subsequent overheating and eventual failure. Water hardness must be maintained within 3 to 9 grain/gal range.**
- **Refer to Section XI "Service and Maintenance" for recommended heating system water treatment products (corrosion/scale inhibitors, cleaners etc) and their suppliers.**

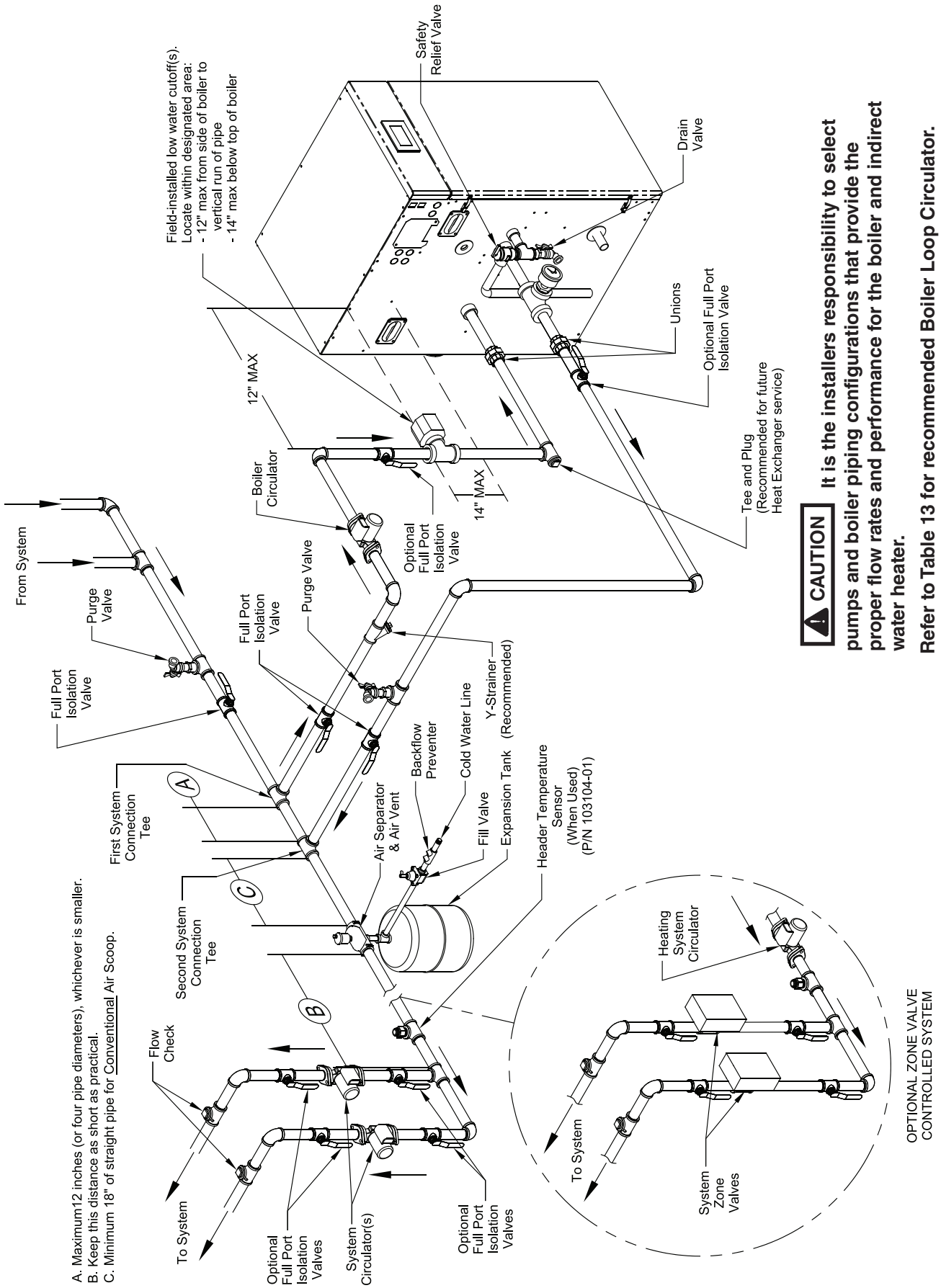

CAUTION **It is the installers responsibility to select pumps and boiler piping configurations that provide the proper flow rates and performance for the boiler and indirect water heater.**

Refer to Table 13 for recommended Boiler Loop Circulator.

Figure 21: Near Boiler Piping - Heating Only

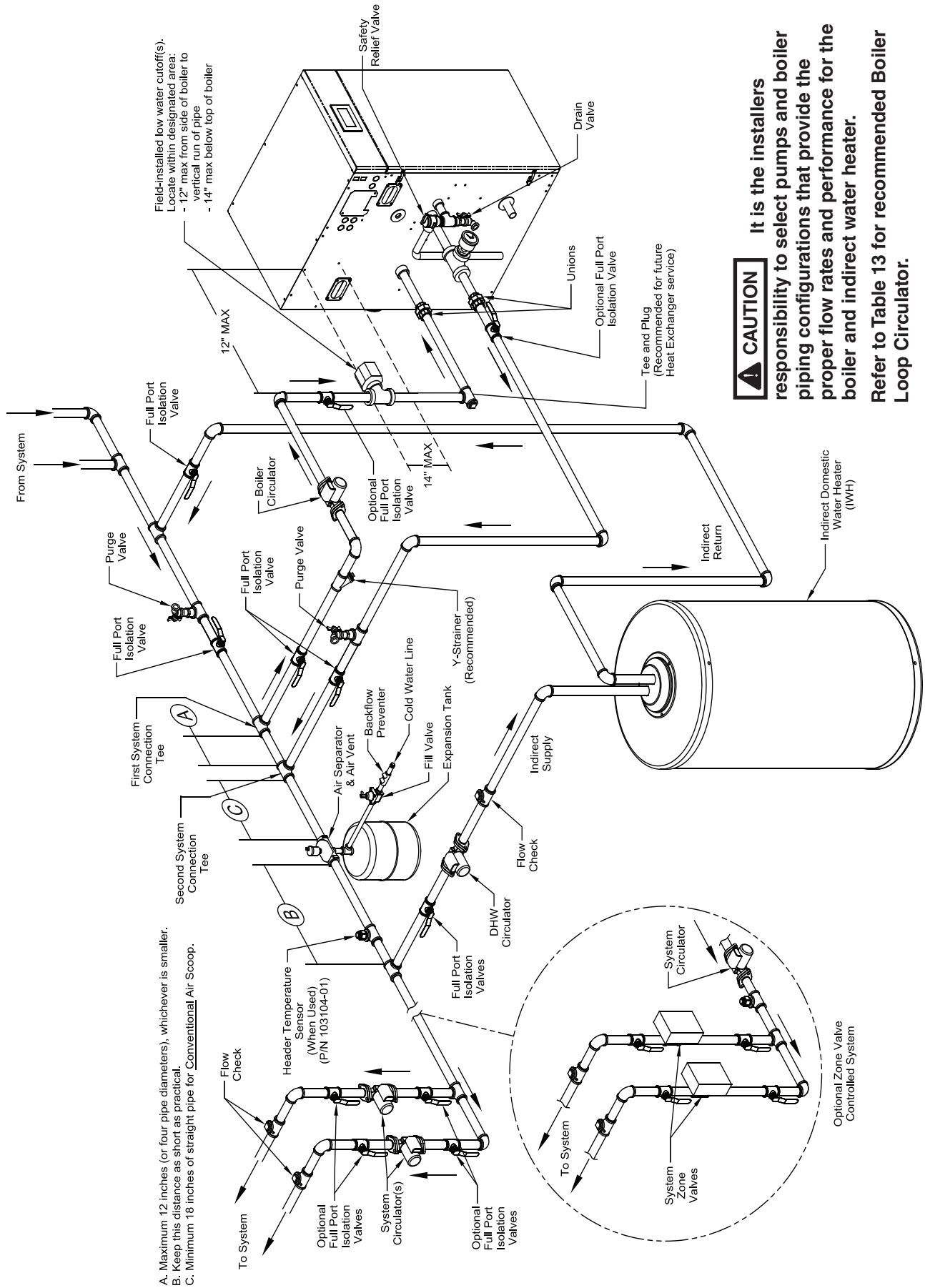

CAUTION **It is the installers responsibility to select pumps and boiler piping configurations that provide the proper flow rates and performance for the boiler and indirect water heater.**

Refer to Table 13 for recommended Boiler Loop Circulator.

Figure 22: Near Boiler Piping - Heating Plus Indirect Water Heater

D. Special Situation Installation Requirements

Observe the following guidelines when making the actual installation of the boiler piping for special situations:

1. **Systems containing high level of dissolved oxygen** – Many hydronic systems contain enough dissolved oxygen to cause severe corrosion damage to Alpine boiler heat exchanger. Some examples include but not limited to:
   - Radiant systems employing tubing without oxygen barrier
   - Systems with routine additions of fresh water
   - Systems open to atmosphere

   If the boiler is used in such a system, it must be separated from oxygenated water being heated with a heat exchanger as shown in Figure 23. Consult the heat exchanger manufacturer for proper heat exchanger sizing as well as flow and temperature requirements. All components on the oxygenated side of the heat exchanger, such as the pump and expansion tank, must be designed for use in oxygenated water.
2. **Piping with a refrigeration system** - If the boiler is used in conjunction with a refrigeration system, pipe the boiler and refrigeration system in parallel. Use isolation valves to prevent chilled medium from entering the boiler.
3. **Boiler Piping with Air Handlers** - Boiler connected to heating coils located in air handling units with potential exposure to refrigerated air circulation must be equipped with flow control valves or other automatic means to prevent gravity circulation of boiler water during the cooling cycle.

Table 15: Multiple Boiler Water Manifold Sizing

Boiler Model	Number of Boilers						
	2	3	4	5	6	7	8
	Recommended Minimum Common Water Manifold Size (NPT)						
ALP080B	1¼”	1½”	1½”	2”	2”	2”	2½”
ALP105B	1¼”	1½”	2”	2”	2½”	2½”	2½”
ALP150B	1½”	2”	2½”	3”	3”	3”	3”
ALP210B	2”	2½”	2½”	3”	3½”	3½”	3½”
ALP285B	2”	3”	3”	3½”	4”	4”	5”

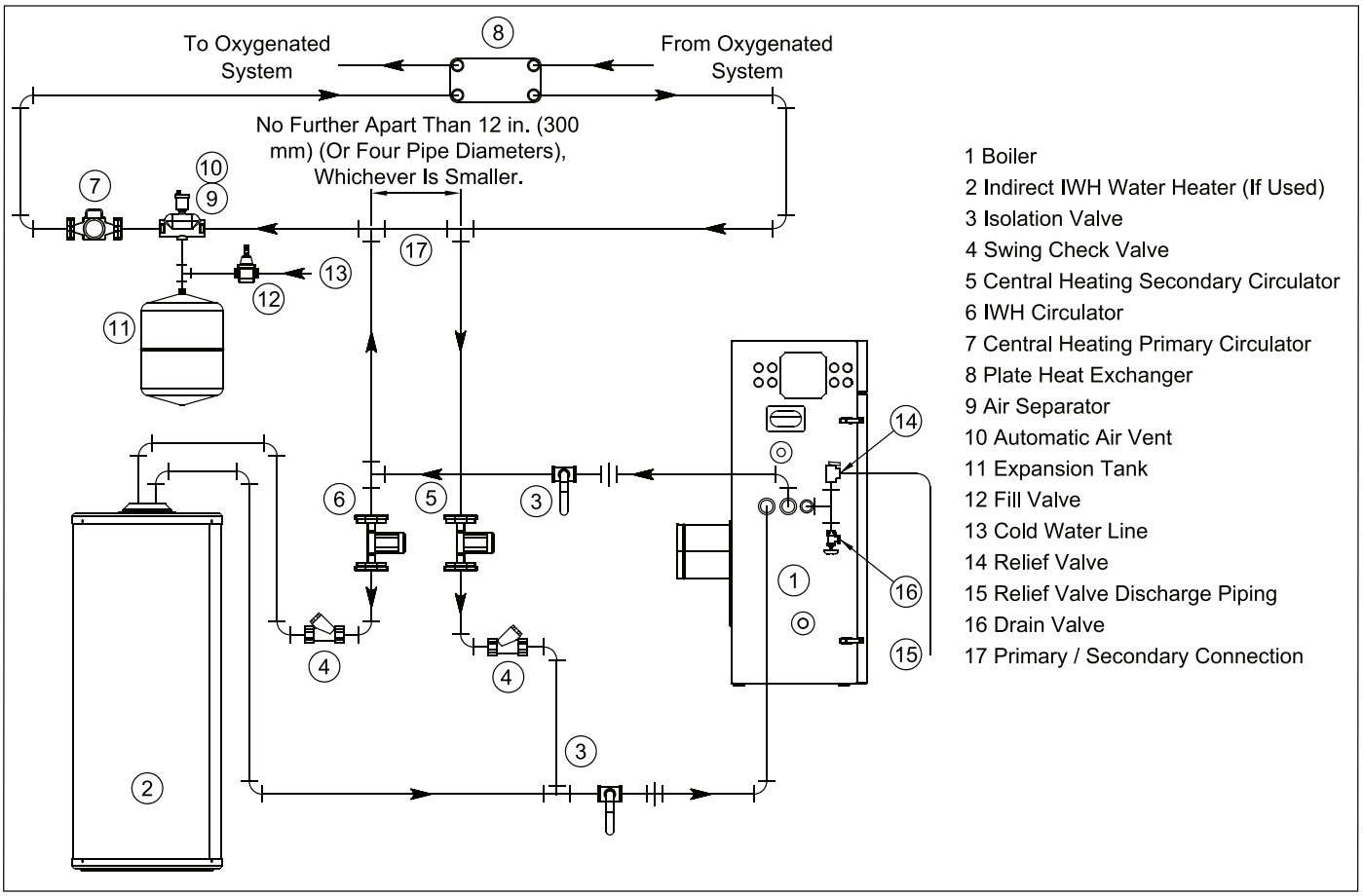

Figure 23: Isolation of the Boiler From Oxygenated Water with A Plate Heat Exchanger

E. Multiple Boiler Installation Water Piping – (See Table 15 and Figures 24A, 24B, 25A and 25B)

1. **Refer to this Section of this manual for:**
   a. Installation of Factory Supplied Piping and Trim Components for an individual module (boiler).
   b. Regarding an individual module (boiler) piping system specific details.
   c. Selection criteria for individual module (boiler) space heating and/or DHW circulators.
2. **For installations where indirect domestic hot water heater is combined with space heating,** when sizing an indirect water heater circulator, compare the specified flow range through an Alpine model boiler to an indirect water heater (Alliance SL™) model coil flow rate required to achieve water heater rating. Refer to Table 16 and Figures 24A, 24B, 25A and 25B.
   a. When Alliance SL™ model coil flow rate, required to achieve water heater rating, **falls within the specified flow range** for Alpine boiler model, the Alliance SL™ model **can be piped as part of Alpine near-boiler piping**. Refer to Table 16 and Figures 25A and 25B.
   b. When Alliance SL™ model coil flow rate, required to achieve water heater rating, **exceeds the specified flow range** for Alpine boiler model, the Alliance SL™/ Alpine boiler combination may result in excessive noise and boiler heat exchanger erosion, and therefore, is **not recommended**. Refer to Table 16 for details.
   c. When Alliance SL™ model coil flow rate, required to achieve water heater rating, **falls below the specified flow range** for Alpine boiler model, the Alliance SL™ model must be **piped as a separate heating zone off the system header**. The circulator must be sized based on the Alliance SL™ model coil flow and combined coil pressure drop and the zone piping total equivalent length. Refer to Table 16 and Figures 24A and 24B for details.

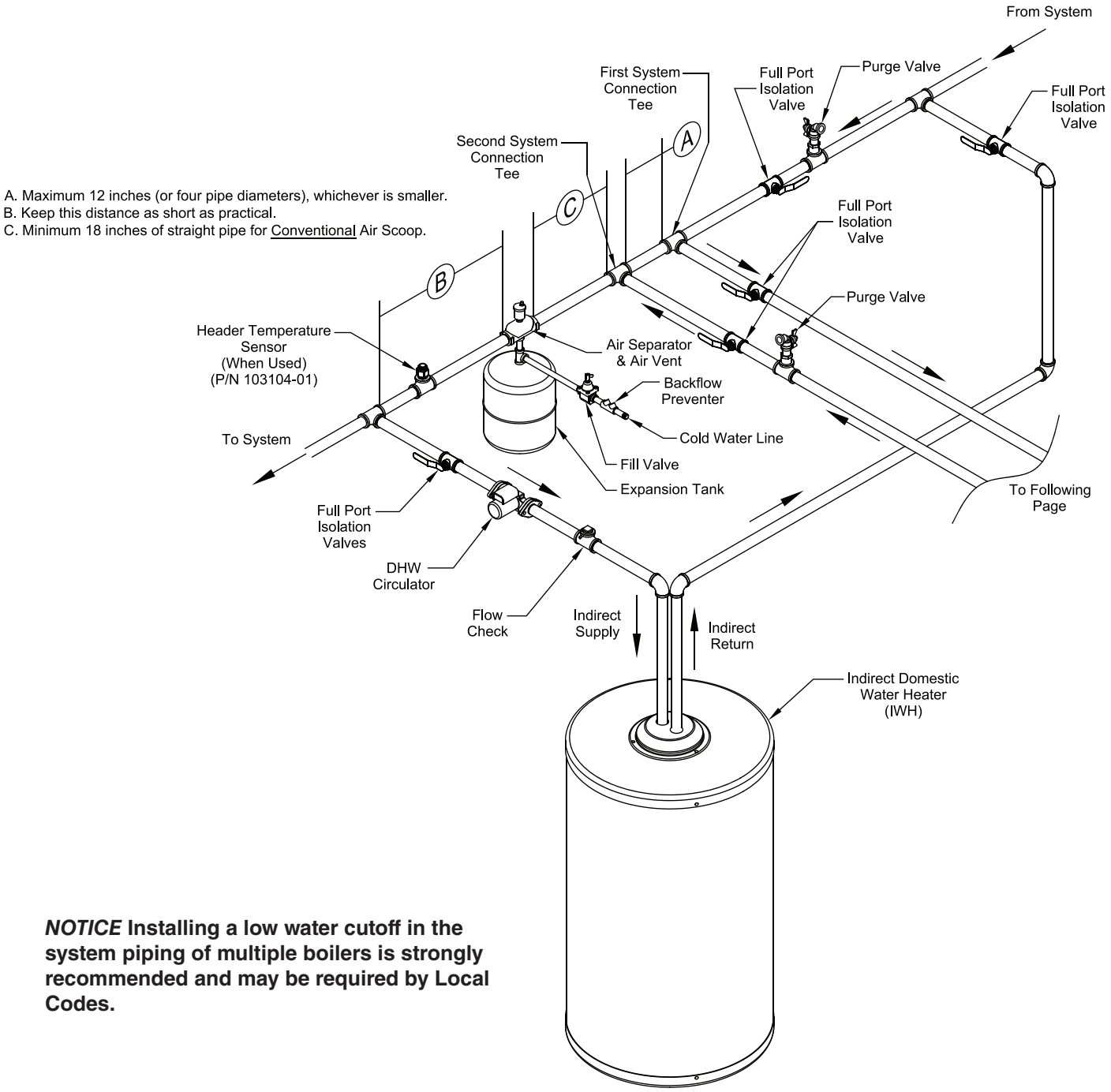

NOTICE **Installing a low water cutoff in the system piping of multiple boilers is strongly recommended and may be required by Local Codes.**

Figure 24A: Multiple Boiler Water Piping w/Domestic Hot Water Heater (Page 1 of 2)

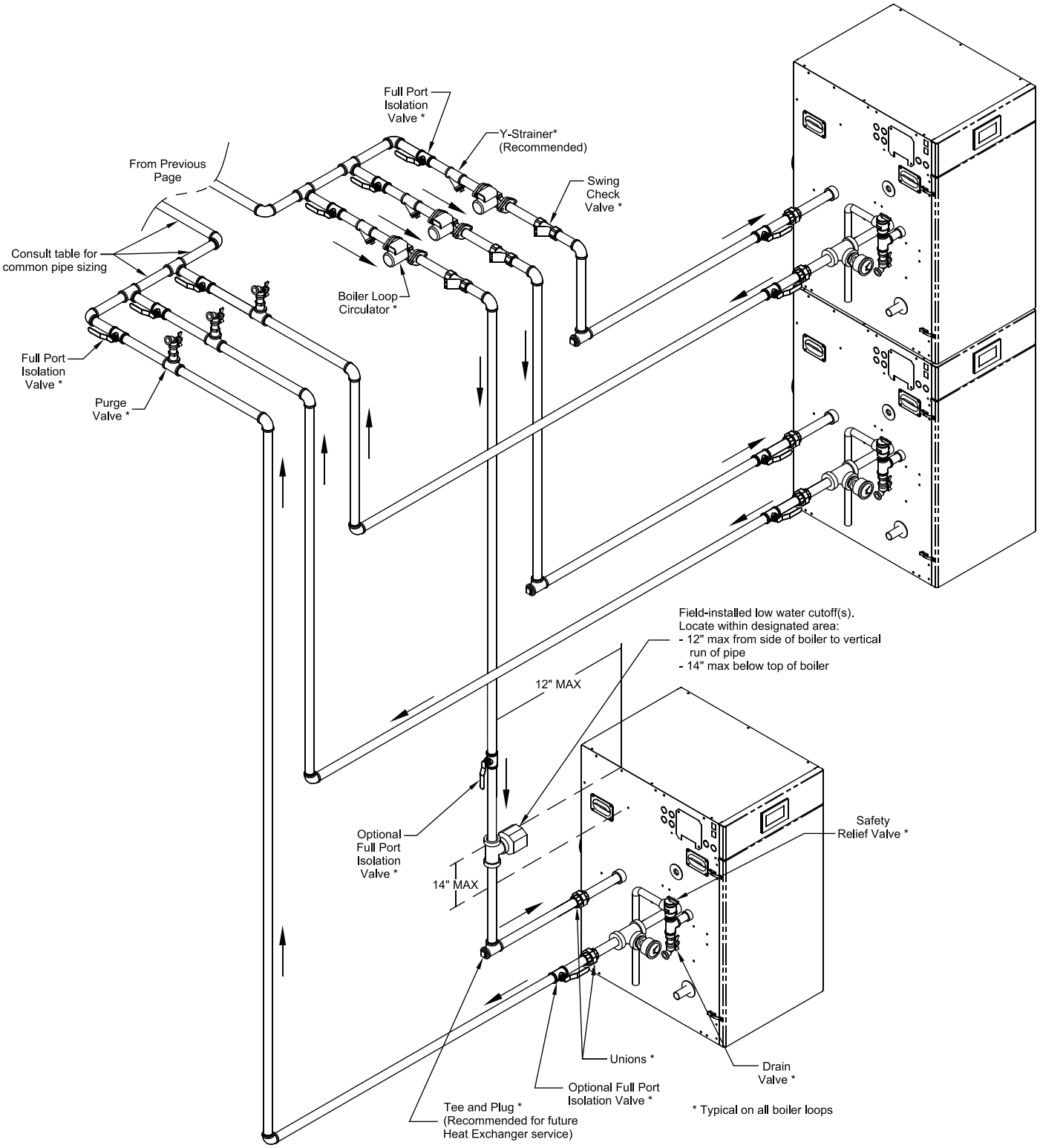

NOTICE **Installing a low water cutoff in the system piping of multiple boilers is strongly recommended and may be required by Local Codes.**

Figure 24B: Multiple Boiler Water Piping w/Domestic Hot Water Heater (Page 2 of 2)

⚠ CAUTION **It is the installers responsibility to select pumps and boiler piping configurations that provide the proper flow rates and performance for the boiler and indirect water heater.**

Refer to Table 13 for recommended Boiler Loop Circulator.

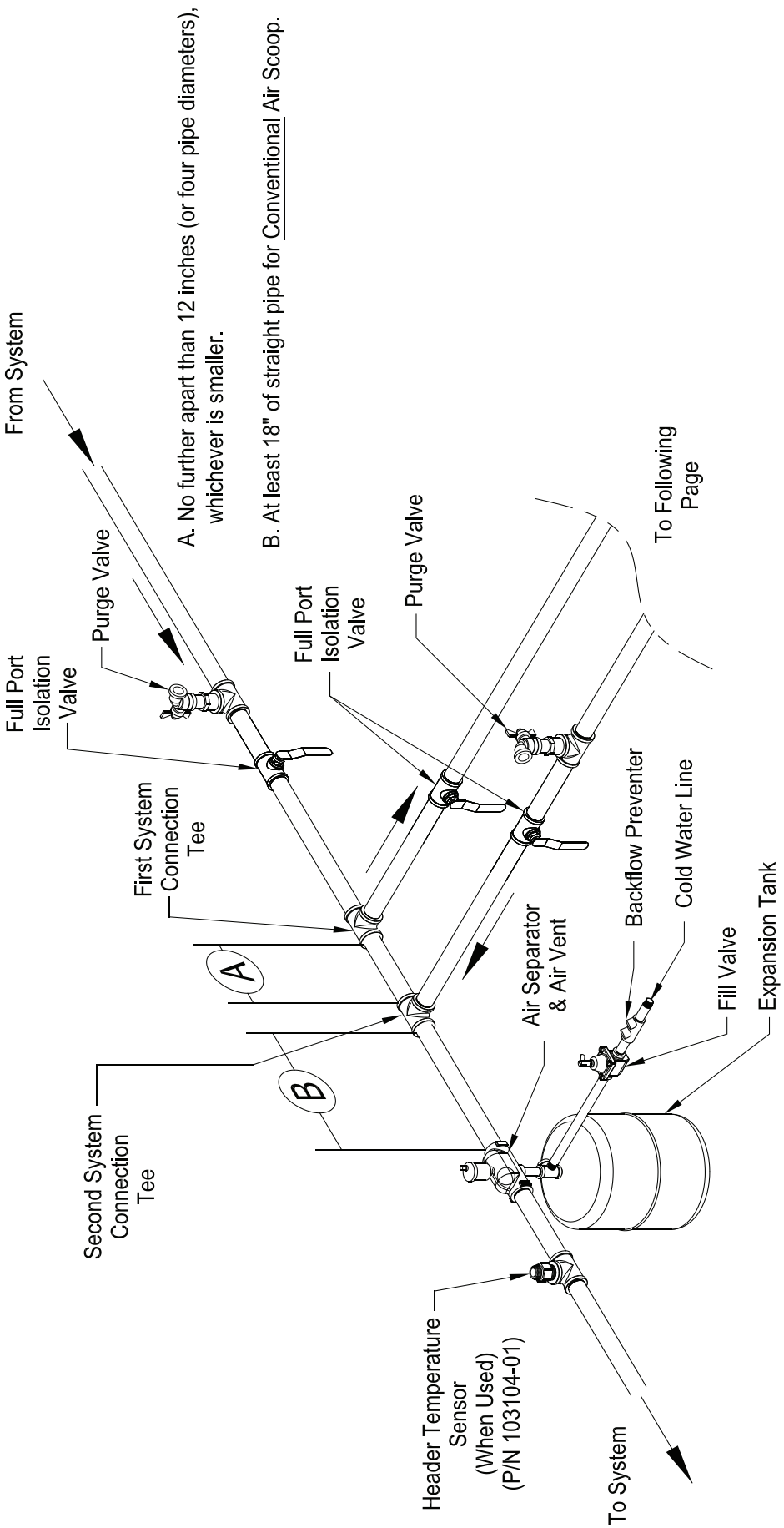

Figure 25A: Alternate Multiple Boiler Water Piping w/Indirect Domestic Hot Water Heater (Page 1 of 2)

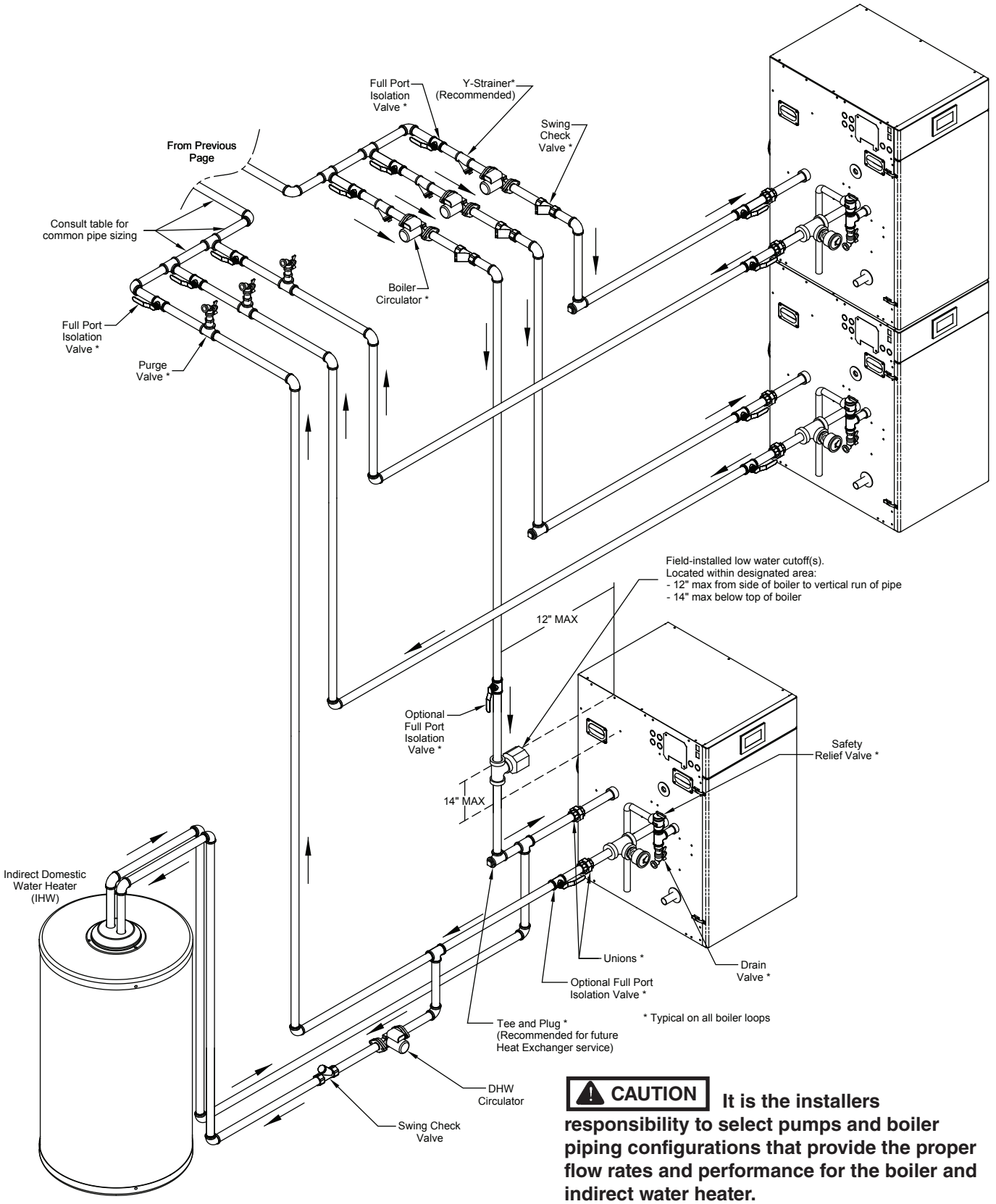

CAUTION **It is the installers responsibility to select pumps and boiler piping configurations that provide the proper flow rates and performance for the boiler and indirect water heater.**

Refer to Table 16 for recommended Boiler Loop Circulator.

Figure 25B: Alternate Multiple Boiler Water Piping w/Indirect Domestic Hot Water Heater (Page 2 of 2)

Table 16: Recommended Circulator Models for Alpine Boilers and Alliance SL Indirect Water Heaters Installed as Part of Near-Boiler Piping Up to 75 Ft. Equivalent Length - Domestic Hot Water Circulator

Boiler Model	Boiler Supply Connection, Inch, FPT	Boiler Return Connection, Inch, FPT	Near-Boiler Piping Supply Pipe Size, Inch	Near-Boiler Piping Return Pipe Size, Inch	Max Allowable Flow through Boiler, GPM @ 20°F DT	Flow, GPM @ 25°F DT	Min Req'd Flow through Boiler, GPM @ 35°F DT	Alliance SL Models to be installed As Part of Near-Boiler Piping	Alliance SL Coil Required Flow Rate, GPM	Alliance SL Coil Head Loss, Ft @ Required Flow Rate	Combined Boiler, Alliance SL & Piping Loop Head Loss, Ft	*Recommended Circulator Make & Model for Alliance SL installed as Part of Near-Boiler Piping	Reference Figure	Notes
ALP080B	1	1	1	1	7.3	5.8	4.2	SL27	6	9	19.3	Taco 0014 Grundfos UPS26-99 FC (second speed)	25B	
								SL35	6	9	19.3			
								SL50	6	9.5	19.8			
								SL70	6	10	20.3			
								SL119	14	17	NA	Not Recommended	NA	Note 1
ALP105B	1	1	1	1	9.6	7.7	5.5	SL27	6	9	19.3	Taco 0014 Grundfos UPS26-99 FC (second speed)	25B	
								SL35	6	9	19.3			
								SL50	6	9.5	19.8			
								SL70	6	10	20.3			
								SL119	14	17	NA	Not Recommended	NA	Note 1
ALP150B	1	1	1	1	13.8	11	7.9	SL27	6	9			25B	Note 2
								SL35	6	9				
								SL50	6	9.5				
								SL70	6	10				
								SL119	14	17	36	Taco 1400-45 Grundfos UPS 32-80/2 (max speed)	25B	

NOTES:

Note 1: Required Alliance SL Coil Flow Rate exceeds Max Allowable Flow Rate through Boiler; this Boiler/Alliance SL combination may result in boiler heat exchanger erosion and noise.

Note 2: Required Alliance SL Coil Flow Rate is below Min Required Flow Rate through Boiler; this Model can only be installed as separate heating zone off system header - see Figure 24A for alternate IWH piping. Indirect Water Heater Circulator must be selected by an installer based on Alliance SL required coil flow and corresponding coil head loss shown as well as total equivalent length of such separate zone.

Note 3: Combined Head Loss shown corresponds to Min Required Flow Rate through Boiler.

* Circulator Models shown are not equipped with internal flow check valve (IFC).

When selecting Circulators with IFC contact Circulator Manufacturer for sizing information.

Near-Boiler Piping Size shown is based on 2 to 5.5 Ft/sec velocity range to avoid potential noise and pipe erosion.

Table 16 (continued): Recommended Circulator Models for Alpine Boilers and Alliance SL Indirect Water Heaters Installed as Part of Near-Boiler Piping Up to 75 Ft. Equivalent Length - Domestic Hot Water Circulator

Boiler Model	Boiler Supply Connection, Inch, FPT	Boiler Return Connection, Inch, FPT	Near-Boiler Piping Supply Pipe Size, Inch	Near-Boiler Piping Return Pipe Size, Inch	Max Allowable Flow through Boiler, GPM @ 20°F DT	Flow, GPM @ 25°F DT	Min Req'd Flow through Boiler, GPM @ 35°F DT	Alliance SL Models to be installed As Part of Near-Boiler Piping	Alliance SL Coil Required Flow Rate, GPM	Alliance SL Coil Head Loss, Ft @ Required Flow Rate	Combined Boiler, Alliance SL & Piping Loop Head Loss, Ft	*Recommended Circulator Make & Model for Alliance SL installed as Part of Near-Boiler Piping	Reference Figure	Notes
ALP210B	1	1	1-1/4	1-1/4	19.4	15.5	11.1	SL27	6	9	NA	Not Recommended	25B	Note 2
								SL35	6	9				
								SL50	6	9.5				
								SL70	6	10				
								SL119	14	17	29.7	Taco 1400-45 Grundfos UPS 32-80/2 (max speed)	25B	
ALP285B	1-1/4	1-1/4	1-1/2	1-1/2	26.5	21.2	15.1	SL27	6	9	NA	Not Recommended	25B	Note 2
								SL35	6	9				
								SL50	6	9.5				
								SL70	6	10				
								SL119	14	17.0	27.0	Taco 1400-45 Grundfos UPS 32-80/2 (max speed)	25B	Note 3

NOTES:

Note 1: Required Alliance SL Coil Flow Rate exceeds Max Allowable Flow Rate through Boiler; this Boiler/Alliance SL combination may result in boiler heat exchanger erosion and noise.

Note 2: Required Alliance SL Coil Flow Rate is below Min Required Flow Rate through Boiler; this Model can only be installed as separate heating zone off system header - see Figure 24A for alternate IWH piping. Indirect Water Heater Circulator must be selected by an installer based on Alliance SL required coil flow and corresponding coil head loss shown as well as total equivalent length of such separate zone.

Note 3: Combined Head Loss shown corresponds to Min Required Flow Rate through Boiler.

* Circulator Models shown are not equipped with internal flow check valve (IFC).

When selecting Circulators with IFC contact Circulator Manufacturer for sizing information.

Near-Boiler Piping Size shown is based on 2 to 5.5 Ft/sec velocity range to avoid potential noise and pipe erosion.

WARNING Explosion Hazard. Failure to properly pipe gas supply to boiler may result in improper operation and damage to the boiler or structure. Always assure gas piping is absolutely leak free and of the proper size and type for the connected load.

An additional gas pressure regulator may be needed. Consult gas supplier.

***NOTICE* Size corrugated stainless steel tubing (CSST) to ensure proper capacity and minimize flow restrictions.**

A. **Size gas piping.** Design system to provide adequate gas supply to boiler. Consider these factors:

1. **Allowable pressure drop from point of delivery to boiler**. Maximum allowable system pressure is ½ psig (3.4 kPa). Actual point of delivery pressure may be less; contact gas supplier for additional information. Minimum gas valve inlet pressure is printed on the rating label located in the boiler's vestibule compartment.
2. **Maximum gas demand**. Refer to the boiler's input as printed on its rating label. Also consider existing and expected future gas utilization equipment (i.e. water heater, cooking equipment).
3. **Length of piping and number of fittings.** Refer to Tables 17A (natural gas) or 17B (LP gas) for maximum capacity of Schedule 40 pipe. Table 14 lists equivalent pipe length for standard fittings.
4. **Specific gravity of gas.** Gas piping systems for gas with a specific gravity of 0.60 can be sized directly from Table 14 and gas with a specific gravity of 1.5 can be sized from Table 16B, unless authority having jurisdiction specifies a gravity factor be applied. For other specific gravity, apply gravity factor from Table 16. If exact specific gravity is not shown choose next higher value.

For materials or conditions other than those listed above, refer to *National Fuel Gas Code,* ANSI Z223.1/NFPA 54 or *Natural Gas and Propane Installation Code,* CAN/CSA B149.1, or size system using standard engineering methods acceptable to authority having jurisdiction.

Table 17A: Maximum Capacity of Schedule 40 Black Pipe in CFH* (Natural Gas) For Gas Pressures of 0.5 psig or Less

Inlet Pressure 0.5 PSI or less; 0.3 Inch W.C. Pressure Drop											
Nominal Pipe Size, In.	Inside Diameter, In.	Length of Pipe, Ft.									
		10	20	30	40	50	60	70	80	90	100
½	0.622	131	90	72	62	55	50	46	42	40	38
¾	0.824	273	188	151	129	114	104	95	89	83	79
1	1.049	514	353	284	243	215	195	179	167	157	148
1¼	1.380	1056	726	583	499	442	400	368	343	322	304
1½	1.610	1582	1087	873	747	662	600	552	514	482	455
2	2.067	3046	2094	1681	1439	1275	1156	1063	989	928	877
2½	2.469	4856	3337	2680	2294	2033	1842	1695	1576	1479	1397
3	3.068	8584	5900	4738	4055	3594	3256	2996	2787	2615	2470

Inlet Pressure 0.5 PSI or less; 0.5 Inch W.C. Pressure Drop											
Nominal Pipe Size, In.	Inside Diameter, In.	Length of Pipe, Ft.									
		10	20	30	40	50	60	70	80	90	100
½	0.622	172	118	95	81	72	65	60	56	52	50
¾	0.824	360	247	199	170	151	137	126	117	110	104
1	1.049	678	466	374	320	284	257	237	220	207	195
1¼	1.380	1392	957	768	657	583	528	486	452	424	400
1½	1.610	2085	1433	1151	985	873	791	728	677	635	600
2	2.067	4016	2760	2217	1897	1681	1523	1402	1304	1223	1156
2½	2.469	6401	4400	3533	3024	2680	2428	2234	2078	1950	1842
3	3.068	11316	7778	6246	5345	4738	4293	3949	3674	3447	3256

*** 1 CFH of Natural Gas is approximately equal to 1 MBH; contact your gas supplier for the actual heating value of your gas.**

Table 17B: Maximum Capacity of Schedule 40 Black Pipe in CFH* (LP Gas) For Gas Pressures of 0.5 psig or Less

Inlet Pressure 11.0 Inch W.C.; 0.3 Inch W.C. Pressure Drop											
Nominal Pipe Size, In.	Inside Diameter, In.	Length of Pipe, Ft.									
		10	20	30	40	50	60	70	80	90	100
½	0.622	88	60	48	41	37	33	31	29	27	25
¾	0.824	184	126	101	87	77	70	64	60	56	53
1	1.049	346	238	191	163	145	131	121	112	105	100
1¼	1.380	710	488	392	336	297	269	248	231	216	204
1½	1.610	1064	732	588	503	446	404	371	346	324	306
2	2.067	2050	1409	1131	968	858	778	715	666	624	590
2½	2.469	3267	2246	1803	1543	1368	1239	1140	1061	995	940
3	3.068	5776	3970	3188	2729	2418	2191	2016	1875	1760	1662

Inlet Pressure 11.0 Inch W.C.; 0.5 Inch W.C. Pressure Drop											
Nominal Pipe Size, In.	Inside Diameter, In.	Length of Pipe, Ft.									
		10	20	30	40	50	60	70	80	90	100
½	0.622	116	80	64	55	48	44	40	38	35	33
¾	0.824	242	166	134	114	101	92	85	79	74	70
1	1.049	456	314	252	215	191	173	159	148	139	131
1¼	1.380	937	644	517	442	392	355	327	304	285	269
1½	1.610	1403	964	775	663	588	532	490	456	427	404
2	2.067	2703	1858	1492	1277	1131	1025	943	877	823	778
2½	2.469	4308	2961	2377	2035	1803	1634	1503	1399	1312	1239
3	3.068	7615	5234	4203	3597	3188	2889	2658	2472	2320	2191

*** 1 CFH of LP Gas is approximately equal to 2.5 MBH; contact your gas supplier for the actual heating value of your gas.**

Table 18: Equivalent Lengths of Standard Pipe Fittings & Valves

Nominal Pipe Size, Inc.	Inside Diameter, In.	Valves (Screwed) - Fully Open				Screwed Fittings				
		Gate	Globe	Angle	Swing Check	45° Elbow	90° Elbow	180 Close Return Bend	90 Tee Flow Through Run	90 Tee, Flow Through Branch
½	0.622	0.4	17.3	8.7	4.3	0.7	1.6	3.5	1.6	3.1
¾	0.824	0.5	22.9	11.4	5.7	1.0	2.1	4.6	2.1	4.1
1	1.049	0.6	29.1	14.6	7.3	1.2	2.6	5.8	2.6	5.2
1¼	1.38	0.8	38.3	19.1	9.6	1.6	3.5	7.7	3.5	6.9
1½	1.61	0.9	44.7	22.4	11.2	1.9	4.0	9.0	4.0	8.0
2	2.067	1.2	57.4	28.7	14.4	2.4	5.2	11.5	5.2	10.3
2½	2.469	1.4	68.5	34.3	17.1	2.9	6.2	13.7	6.2	12.3
3	3.068	1.8	85.2	42.6	21.3	3.6	7.7	17.1	7.7	15.3

Table 19: Specific Gravity Correction Factors

Specific Gravity	Correction Factor	Specific Gravity	Correction Factor
0.60	1.00	0.90	0.82
0.65	0.96	1.00	0.78
0.70	0.93	1.10	0.74
0.75	0.90	1.20	0.71
0.80	0.87	1.30	0.68
0.85	0.81	1.40	0.66

B. Connect boiler gas valve to gas supply system.

WARNING Explosion Hazard. Failure to use proper thread compounds on all gas connectors may result in leaks of flammable gas.
Gas supply to boiler and system must be absolutely shut off prior to installing or servicing boiler gas piping.

1. **Use methods and materials in accordance** with local plumbing codes and requirements of gas supplier. In absence of such requirements, follow *National Fuel Gas Code*, ANSI Z223.1/NFPA 54 and/or *Natural Gas and Propane Installation Code,* CAN/CSA B149.1.
2. **Use thread (joint) compounds (pipe dope)** resistant to action of liquefied petroleum gas.
3. **Alpine boilers have factory supplied** Miscellaneous Part Carton (P/N 101777-01 - ALP080B through ALP210B; 101777-02 - ALP285B), which includes gas piping components to connect boiler gas valve to gas supply system. Install these components prior to connecting boiler to gas supply system piping as follows:
   a. Locate and remove either ½ in. NPT x 6 in. long black nipple and ½ in. NPT external gas shutoff valve (ALP080B through ALP210B), or ¾ in. NPT x 6 in. long black nipple and ¾ in. NPT external gas shutoff valve (ALP285B only).
   b. Feed the appropriate nipple through factory installed jacket left side panel grommet (refer to Figure 1A or 1B for gas supply connection identification) and screw the nipple into boiler gas valve inlet port.
   c. Mount the appropriate external gas shutoff valve onto the threaded nipple end outside of the jacket left side panel.
   d. Install sediment trap, ground-joint union and manual shut-off valve upstream of mounted factory supplied manual shut-off valve. See Figure 26.
4. **All above ground gas piping** upstream from manual shut-off valve must be electrically continuous and bonded to a grounding electrode. Do not use gas piping as grounding electrode. Refer to *National Electrical Code,* NFPA 70.

C. Pressure test. See Table 20 for Alpine Min./Max. Pressure Ratings. The boiler and its gas connection must be leak tested before placing boiler in operation.

Table 20: Min./Max. Pressure Ratings

Boiler Model No.	Natural/LP Gas Max. Pressure (in. w.c.)	Natural Gas Min. Pressure Inlet to Gas Valve (in. w.c.)	LP Gas Min. Pressure Inlet to Gas Valve (in. w.c.)
ALP080B	14.0	4.0	11.0
ALP105B			
ALP150B			
ALP210B			
ALP285B			

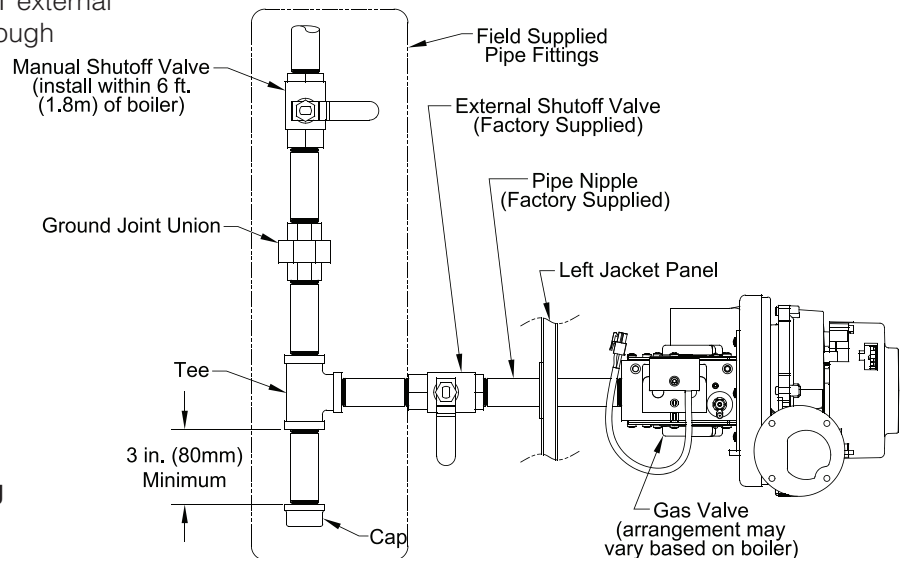

Figure 26: Recommended Gas Piping

1. **Protect boiler gas control valve**. For all testing over ½ psig (3.5kPa), boiler and its individual shutoff valve must be disconnected from gas supply piping. For testing at ½ psig (3.5kPa) or less, isolate boiler from gas supply piping by closing boiler's individual manual shutoff valve.
2. **Locate leaks using approved** combustible gas non-corrosive leak detector solution.

DANGER **Explosion Hazard. Do not use matches, candles, open flames or other ignition source to check for leaks.**

D. Gas Piping for Multiple Boiler Installation

1. **Individual module (boiler) gas pipe sizing specific details** - see Paragraph A.
2. **Individual module (boiler) recommended gas piping detail** - see Figure 26.
3. **An additional gas pressure regulator(s)** may need to be installed to properly regulate inlet gas pressure at the smallest individual module (boiler).

CAUTION **If gas pressure in the building is above ½ psig (3.4 kPa), an additional gas pressure regulator is required. Using one additional regulator for multiple boilers may result in unsafe boiler operation. The additional regulator must be able to properly regulate gas pressure at the input of the smallest boiler. If the regulator cannot do this, two or more additional regulators are required. Consult regulator manufacturer and/or local gas supplier for instructions and equipment ratings.**

VIII. Electrical

DANGER **Electrical Shock Hazard. Positively assure all electrical connections are unpowered before attempting installation or service of electrical components or connections of the boiler or building. Lock out all electrical boxes with padlock once power is turned off.**

WARNING **Electrical Shock Hazard. Failure to properly wire electrical connections to the boiler may result in serious physical harm.**

Electrical power may be from more than one source. Make sure all power is off before attempting any electrical work.

Each boiler must be protected with a properly sized over-current device.

Never jump out or make inoperative any safety or operating controls.

The wiring diagrams contained in this manual are for reference purposes only. Each boiler is shipped with a wiring diagram attached to the front door. Refer to this diagram and the wiring diagram of any controls used with the boiler. Read, understand and follow all wiring instructions supplied with the controls.

IMPORTANT This boiler is equipped with a feature that saves energy by reducing the boiler water temperature as the heating load decreases. This feature is equipped with an override which is provided primarily to permit the use of an external energy management system that serves the same function. THIS OVERRIDE MUST NOT BE USED UNLESS AT LEAST ONE OF THE FOLLOWING CONDITIONS IS TRUE:

- **An external energy management system is installed that reduces the boiler water temperature as the heating load decreases.**
- **This boiler is not used for any space heating.**
- **This boiler is part of a modular or multiple boiler system having a total input of 300,000 BTU/hr or greater.**
- **This boiler is equipped with a tankless coil.**

NOTICE **This boiler is equipped with a high water temperature limit located inside the internal wiring of the boiler. This limit provides boiler shutdown in the event the boiler water temperature exceeds the set point of the limit control. Certain local codes require an additional water temperature limit. In addition, certain types of systems may operate at temperatures below the minimum set point of the limit contained in the boiler.**

If this occurs, install an additional water temperature limit (Honeywell L4006 Aquastat). Wire as indicated in the Electrical Section of this manual

All wire, wire nuts, controls etc. are installer supplied unless otherwise noted.

A. General. Install wiring and electrically ground boiler in accordance with requirements of authority having jurisdiction or, in the absence of such requirements, follow the *National Electrical Code*, ANSI/NFPA 70, and/or *Canadian Electrical Code* Part 1, CSA C22.1 Electrical Code.

B. A separate electrical circuit must be run from the main electrical service with an over-current device/disconnect in the circuit. A service switch is recommended and may be required by some local jurisdictions. Install the service switch in the line voltage "Hot" leg of the power supply. Locate the service switch such that the boiler can be shut-off without exposing personnel to danger in the event of an emergency. Connect the main power supply and ground to the 3 boiler wires (black, white and green) located in the junction box at top left side of the boiler jacket.

C. Refer to Figures 27 and 28 for details on the internal boiler wiring.

Line Voltage (120 VAC) Connections - see Figure 27.

1. **The line voltage connections** are located in the junction box on the left side of the vestibule. The terminal block TB-1 in conjunction with terminal screw identification label is attached to the junction box combination cover/inside high voltage bracket.

2. **The connections are:**
   - TB1-1: Ground
   - TB1-2: L1 Line Voltage (Hot)
   - TB1-3: L2 Line Voltage (Neutral)
   - TB1-4: System Circulator (Hot)
   - TB1-5: System Circulator (Neutral)
   - TB1-6: Boiler Circulator (Hot)
   - TB1-7: Boiler Circulator (Neutral)
   - TB1-8: DHW Circulator (Hot)
   - TB1-9: DHW Circulator (Neutral)

Low Voltage (24 VAC) Connections - see Figure 27.

3. **The terminal block TB-2** in conjunction with terminal screw identification label is attached to the junction box front and located inside Sage2.X Control compartment on the left side.
4. **The connections are (listed identification label top to bottom):**
   - TB2-1: "Heating Thermostat"
   - TB2-2: "Heating Thermostat"
   - TB2-3: "DHW Temperature Switch"
   - TB2-4: "DHW Temperature Switch"
   - TB2-5: "Outdoor Sensor"
   - TB2-6: "Outdoor Sensor"
   - TB2-7: "Header Sensor"
   - TB2-8: "Header Sensor"
   - TB2-9: "Remote Firing Rate +"
   - TB2-10: "Remote Firing Rate -"
   - TB2-11: "External Limit"
   - TB2-12: "External Limit"
5. **If the outdoor sensor is connected** to terminals 5 and 6 "Outdoor Sensor", the boiler will adjust the target space heating set point supply water temperature downwards as the outdoor air temperature increases. If used, this sensor should be located on the outside of the structure in an area where it will sense the average air temperature around the house. Avoid placing this sensor in areas where it may be covered with ice or snow. Locations where the sensor will pick up direct radiation from the sun should also be avoided. Avoid placing the sensor near potential sources of electrical noise such as transformers, power lines, and fluorescent lighting. Wire the sensor to the boiler using 22 gauge or larger wire. As with the sensor, the sensor wiring should be routed away from sources of electrical noise. Where it is impossible to avoid such noise sources, wire the sensor using a 2 conductor, UL Type CM, AWM Style 2092, 300 Volt 60°C shielded cable. Connect one end of the shielding on this cable to ground.

NOTICE **When making low voltage connections, make sure that no external power source is present in the thermostat or limit circuits. If such a power source is present, it could destroy the boiler's microprocessor control (Sage2.X). One example of an external power source that could be inadvertently connected to the low voltage connections is a transformer in old thermostat wiring.**

D. Power Requirements

Nominal boiler current draw is provided in Table 21. These values are for planning purposes only and represent only the boiler's power consumption. To obtain total system power consumption add any selected circulator and component current draws.

Table 21: Boiler Current Draw

Model Number	Nominal Current (amps)
ALP080B	<2
ALP105B	<2
ALP150B	<2
ALP210B	<3
ALP285B	<5

E. Multiple Boiler Wiring

Install over-current protection in accordance with authority having jurisdiction or, in the absence of such requirements, follow the *National Electric Code,* NFPA 70, and/or *Canadian Electrical Code* Part 1, CSA C22.1. Do not provide over-current protection greater than 15 amperes. If it becomes necessary to provide greater amperes (because of the number of boilers provided) use separate circuits and over-current protection for additional boilers.

F. External Multiple Boiler Control System

As an alternate to the Sage2.X Control internal sequencer, the Sage2.X Control also accepts an input from an external sequencer. Follow multiple boiler control system manufacturer (Honeywell, Tekmar, etc.) instructions to properly apply a multiple boiler control system. The Tekmar Model 264 and Model 265 based control wiring diagrams (Figures 31A and 31B) are provided as examples of typical multiple boiler control systems.

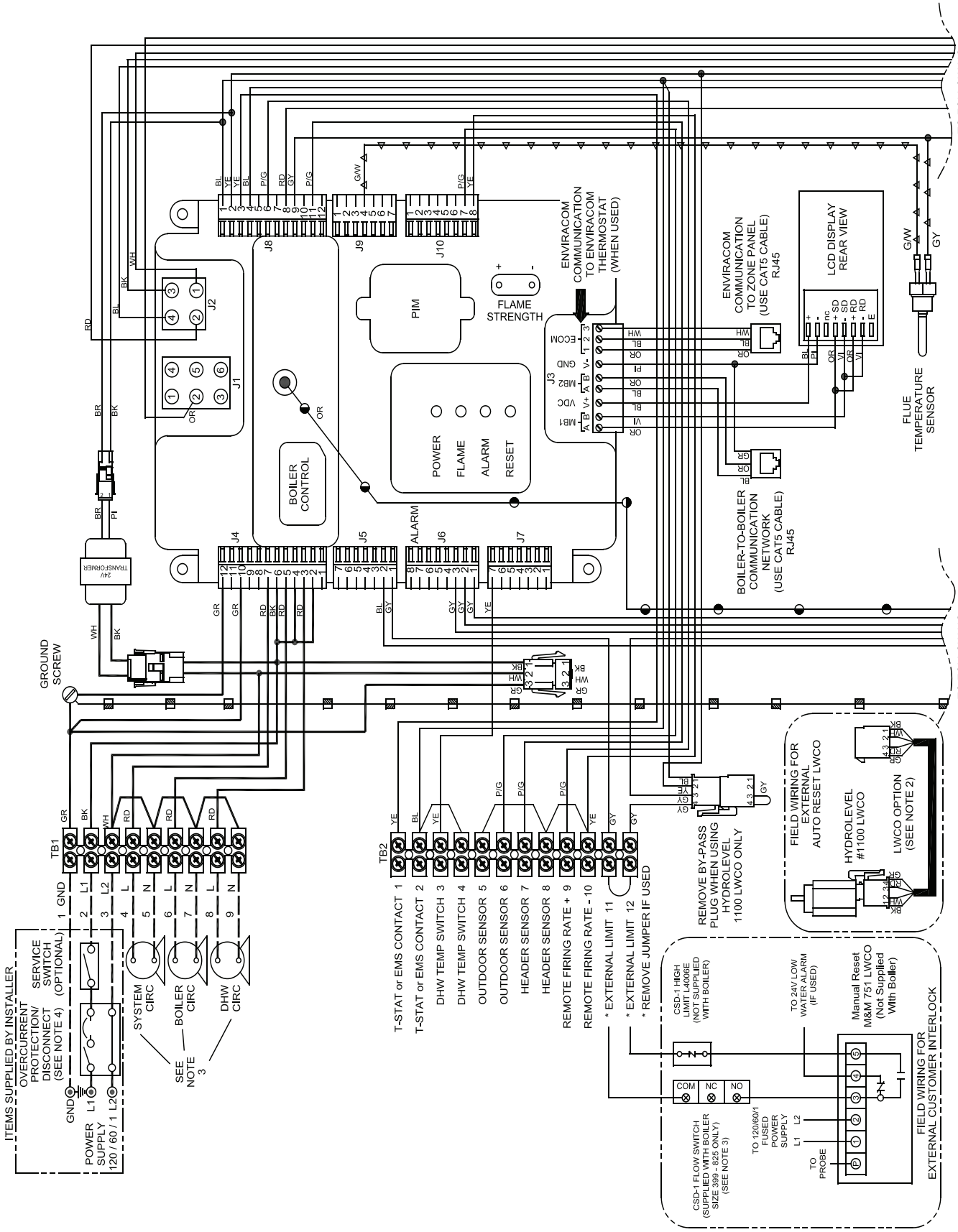
TO FOLLOWING PAGE
J8
J9
J10
J2
J1
J3
J4
J5
J6
J7
PIM
FLAME STRENGTH
ENVIRACOM COMMUNICATION TO ENVIRACOM THERMOSTAT (WHEN USED)
ENVIRACOM COMMUNICATION TO ZONE PANEL (USE CAT5 CABLE) RJ45
LCD DISPLAY REAR VIEW
FLUE TEMPERATURE SENSOR
BOILER CONTROL
POWER
FLAME
ALARM
RESET
BOILER-TO-BOILER COMMUNICATION NETWORK (USE CAT5 CABLE) RJ45
24V TRANSFORMER
GROUND SCREW
TB1
TB2
GND
L1
L2
T-STAT or EMS CONTACT 1
T-STAT or EMS CONTACT 2
DHW TEMP SWITCH 3
DHW TEMP SWITCH 4
OUTDOOR SENSOR 5
OUTDOOR SENSOR 6
HEADER SENSOR 7
HEADER SENSOR 8
REMOTE FIRING RATE + 9
REMOTE FIRING RATE - 10
* EXTERNAL LIMIT 11
* EXTERNAL LIMIT 12
* REMOVE JUMPER IF USED
REMOVE BY-PASS PLUG WHEN USING HYDROLEVEL 1100 LWCO ONLY
FIELD WIRING FOR EXTERNAL AUTO RESET LWCO
HYDROLEVEL #1100 LWCO
LWCO OPTION (SEE NOTE 2)
ITEMS SUPPLIED BY INSTALLER
OVERCURRENT PROTECTION/ DISCONNECT (SEE NOTE 4)
SERVICE SWITCH (OPTIONAL)
POWER SUPPLY 120 / 60 / 1
SYSTEM CIRC
BOILER CIRC
DHW CIRC
SEE NOTE 3
CSD-1 HIGH LIMIT L4006E (NOT SUPPLIED WITH BOILER)
TO 24V LOW WATER ALARM (IF USED)
Manual Reset M&M 751 LWCO (Not Supplied With Boiler)
CSD-1 FLOW SWITCH (SUPPLIED WITH BOILER SIZE 399 - 825 ONLY) (SEE NOTE 3)
COM
NC
NO
TO 120/60/1 FUSED POWER SUPPLY
TO PROBE
FIELD WIRING FOR EXTERNAL CUSTOMER INTERLOCK

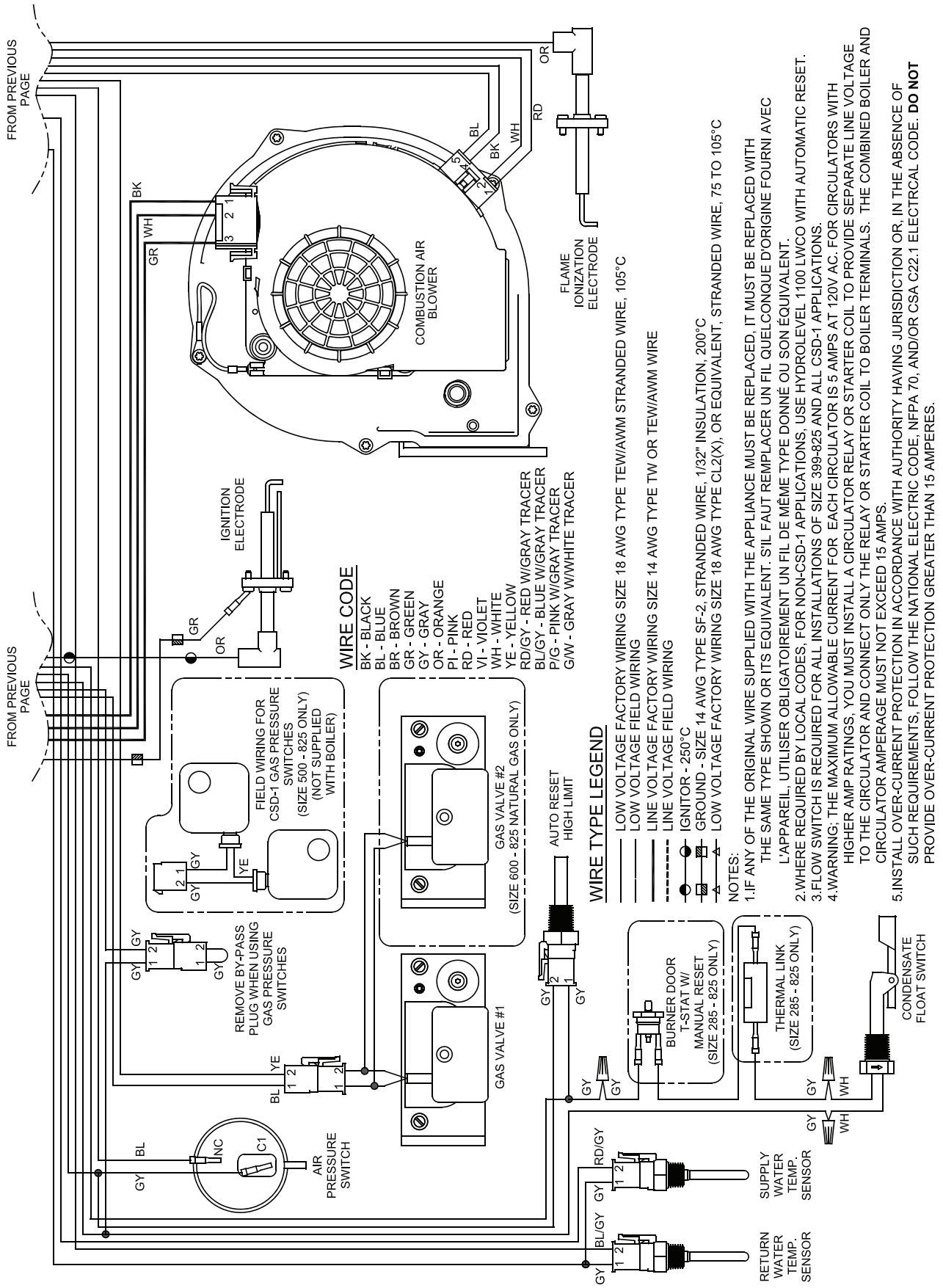

Figure 27: Wiring Connection Diagram

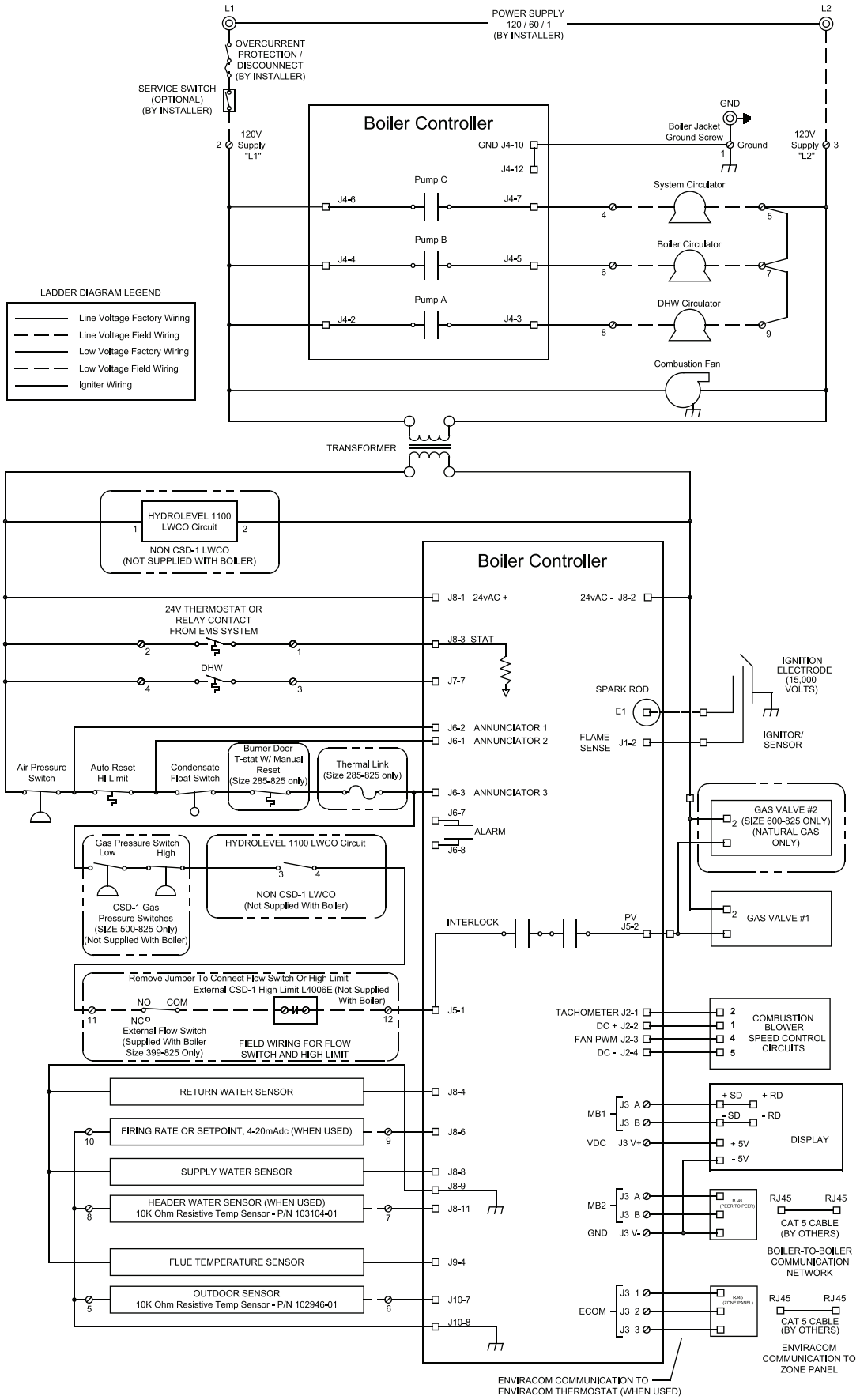

Figure 28: Ladder Diagram

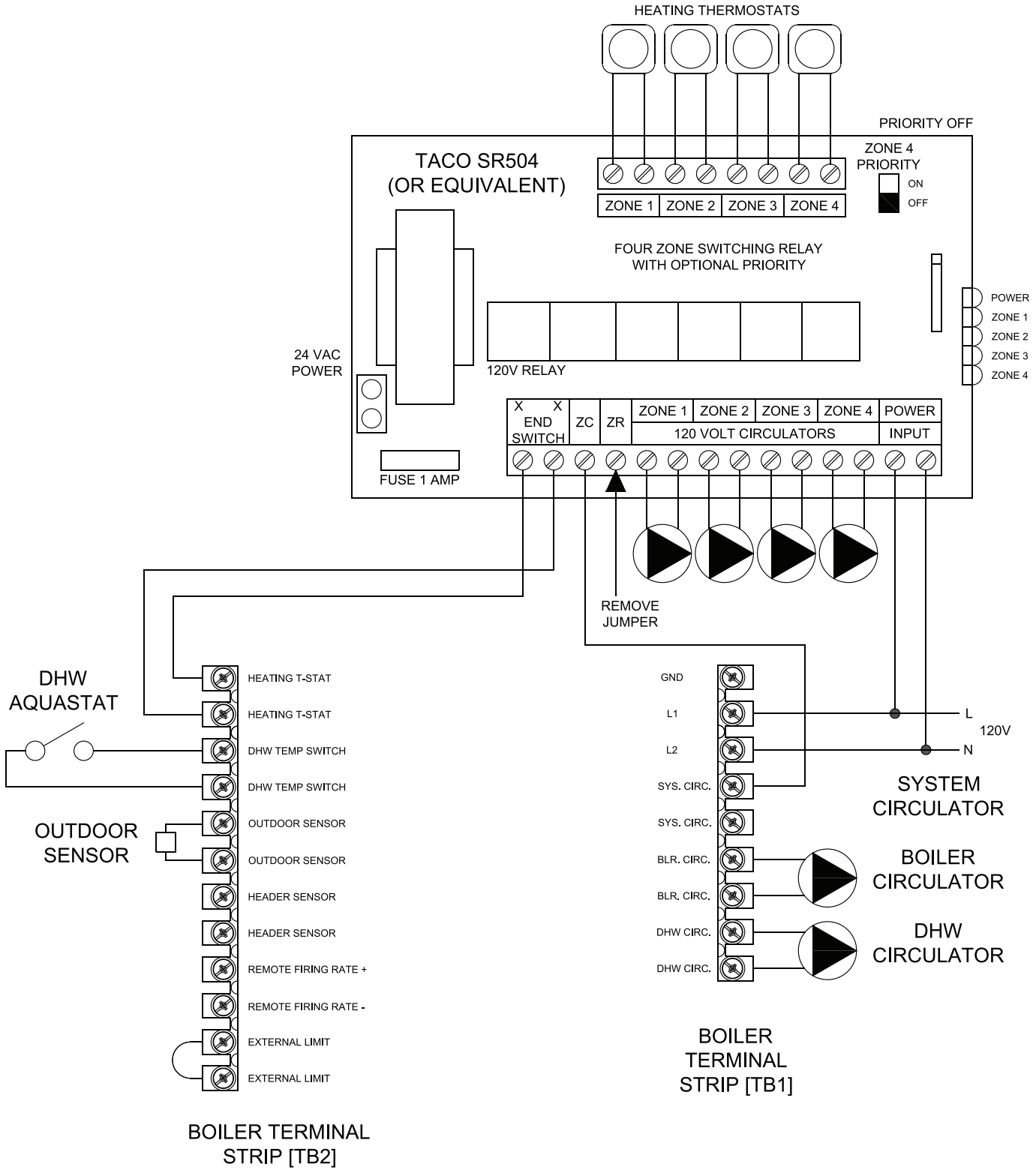

***USE SAME POWER SOURCE FOR ALL CONTROLS AND ENSURE POLARITY TO ALL CONTROL DEVICES IS CORRECT

Figure 29A: Modified Wiring For DHW Priority When Using Low Flow Circulator Piped Off System Header - Heating (with Central Heating Circulators) Plus Alternately Piped Indirect Water Heater

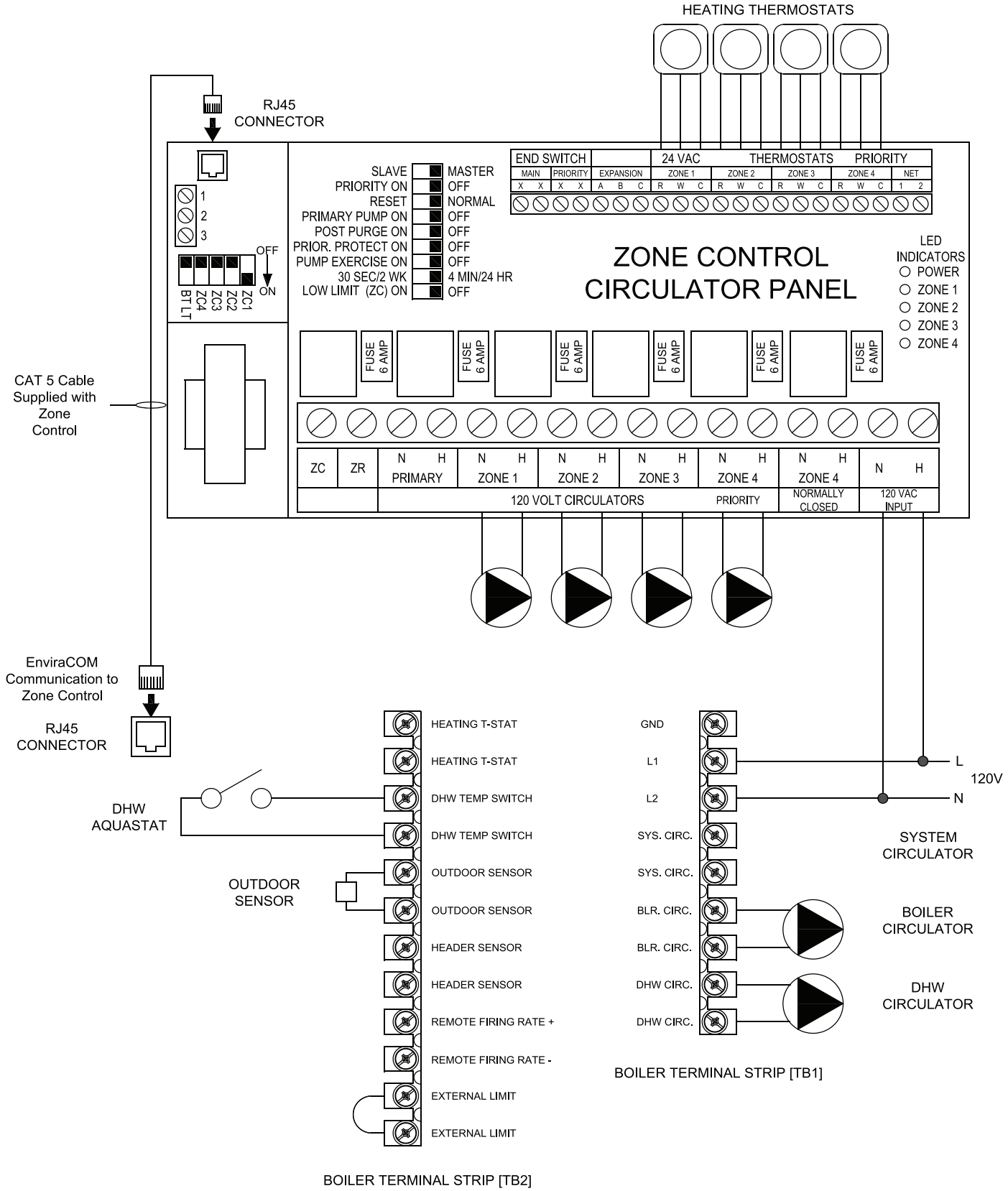

***USE SAME POWER SOURCE FOR ALL CONTROLS AND ENSURE POLARITY TO ALL CONTROL DEVICES IS CORRECT

Figure 29B: DHW Priority/Circulators (with Zone Panel) Piped Off System Header Wiring Schematic for Heating Zone Circulators

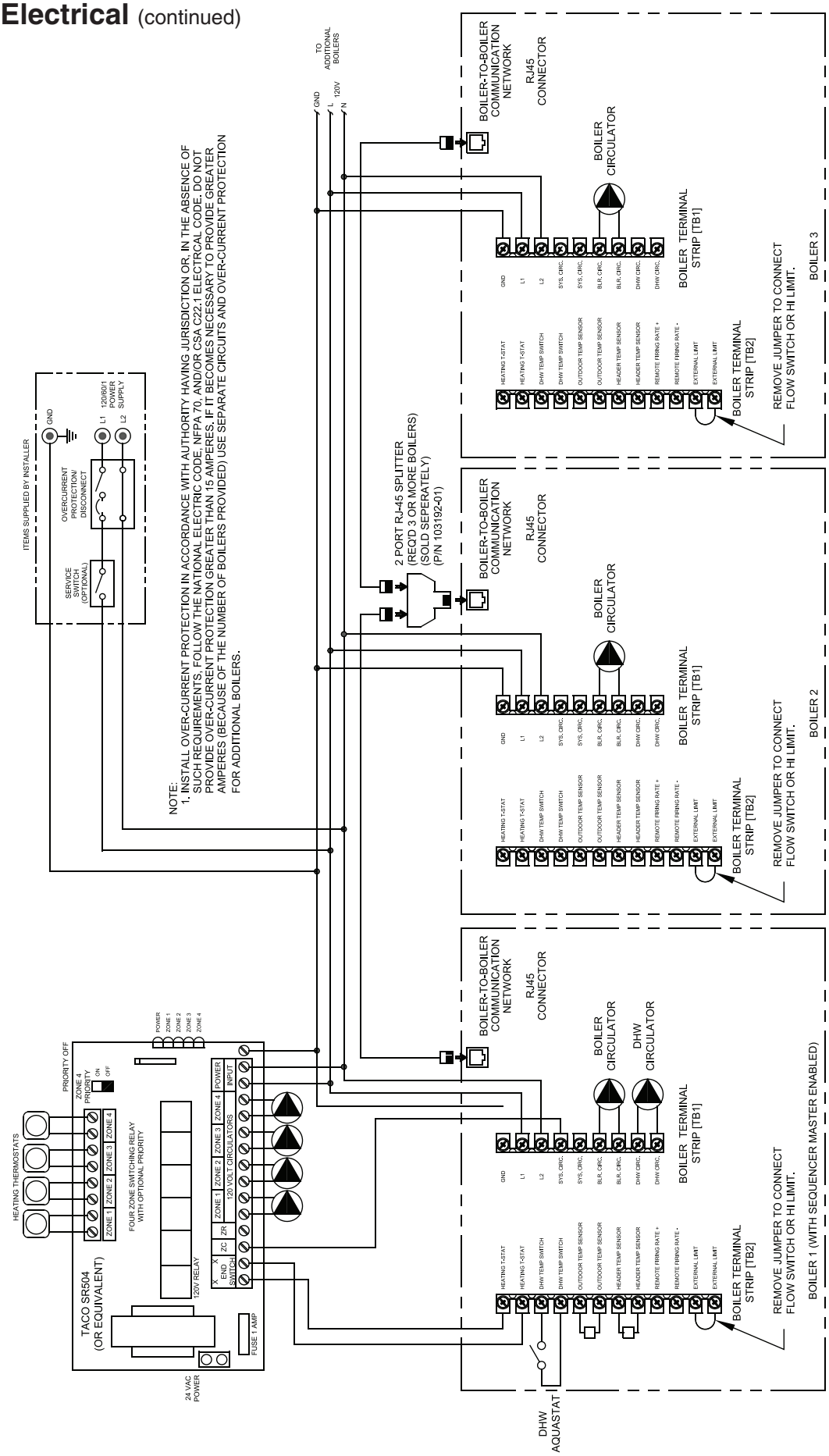

Figure 29C: Multiple Boiler Wiring Diagram
Internal Sage2.X Multiple Boiler Control Sequencer
(Three Boilers Shown, Typical Connections for up to Eight Boilers)

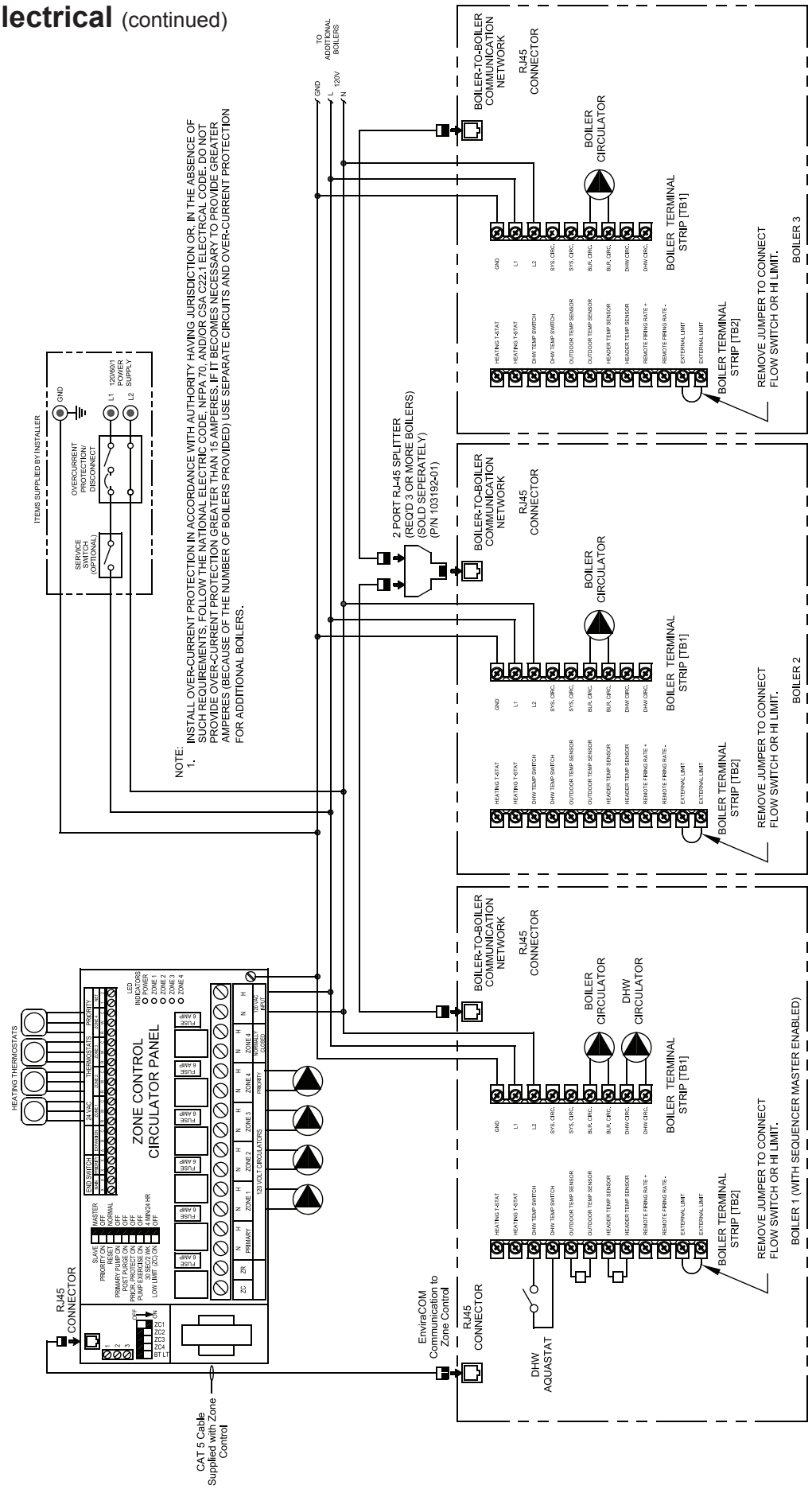

Figure 29D: Boiler-to-Boiler Communication (with Zone Panel)

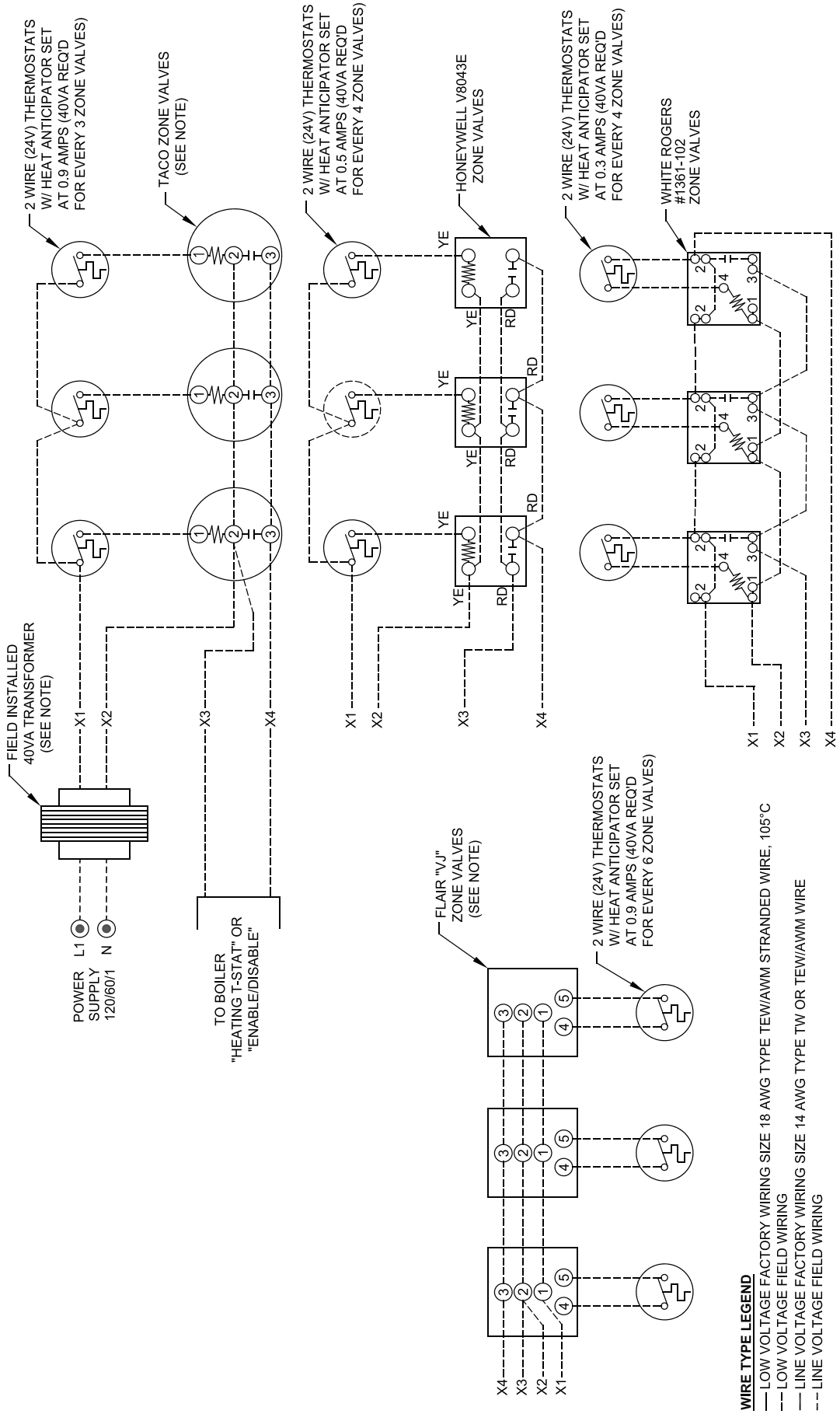

NOTE:
CHECK FOR CROSS-PHASING BETWEEN BOILER TRANSFORMER AND FIELD SUPPLIED TRANSFORMER ON TACO AND FLAIR ZONE VALVE CIRCUITS. IF CROSS-PHASING OCCURS, CORRECT BY SWITCHING X1 AND X2 OR X3 AND X4. ALSO, BOILER SECONDARY SIDE (24V) IS GROUNDED ON EI AND CANADIAN MODELS AND THE ZONE CIRCUIT MAY NOT OPERATE IF A SEPARATE GROUND IS MADE IN THE ZONE CIRCUIT.

Figure 30: Modified Wiring For DHW Priority When Using Low Flow Circulator Piped Off System Header - Heating (with Central Heating Zone Valves) Plus Alternately Piped Indirect Water Heater

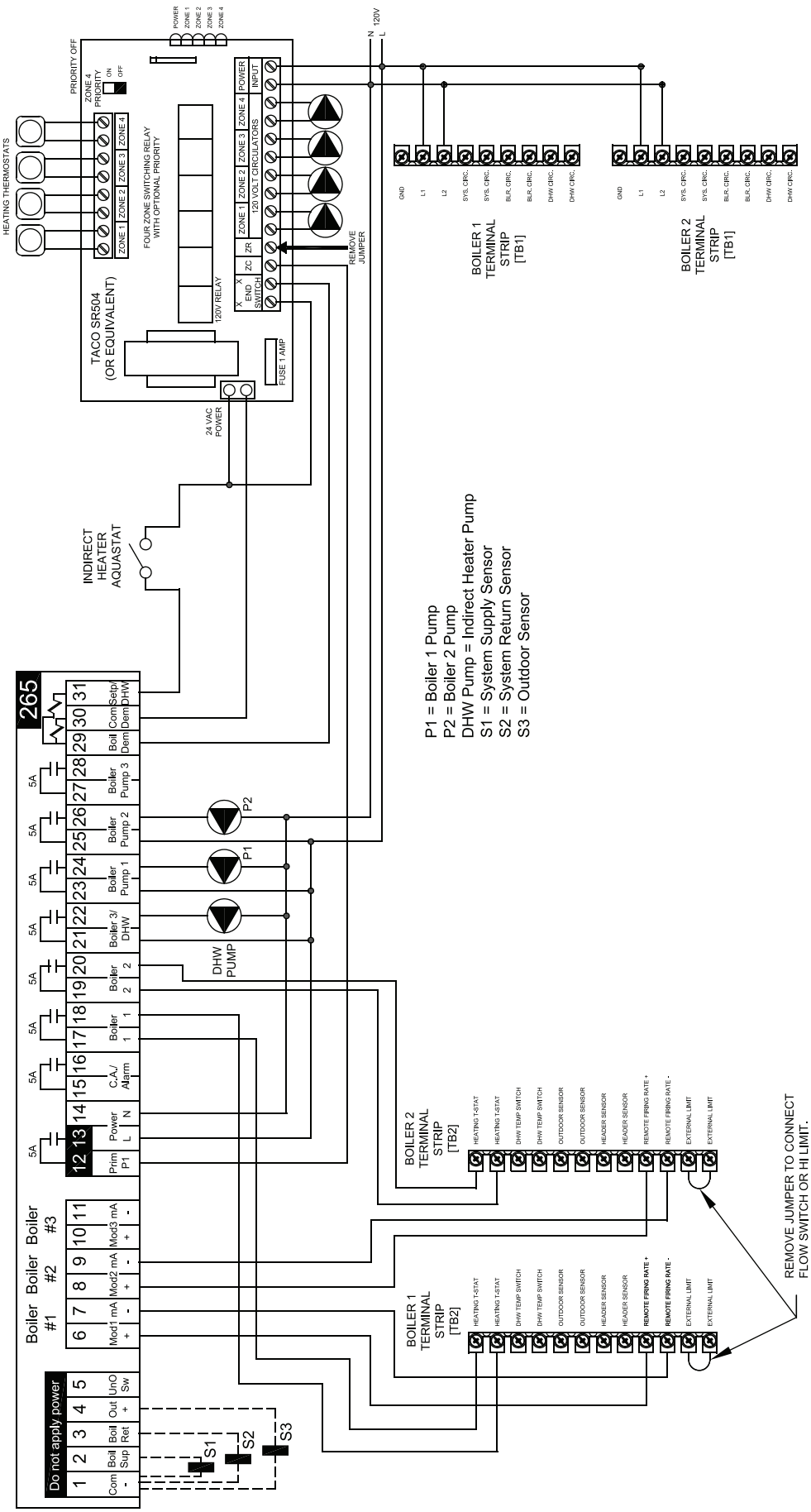

Figure 31A: Multiple Boiler Wiring Diagram w/Tekmar 265 Control

Tekmar 265 Based Control System (or equal)

Sequence of Operation

The Tekmar 265 Control (or equal) can control up to three (3) boilers and an Indirect Water Heater. When a call for heat is received by the Tekmar 265 Control, the control will fire either one or more boilers in either parallel or sequential firing mode to establish a required reset water temperature in the system supply main based on outdoor temperature. The boilers will modulate based on an Analog communication signal established between the Tekmar 265 Control and each boiler's Sage2.X Control. The boiler(s) and system supply water temperature will be reset together to maintain the input that is needed to the system. When a call for Indirect Hot Water is generated to the Tekmar 265, the control will de-energize the zone pump control (ZC terminal), energize the Indirect pump and modulate the boiler firing to establish a setpoint temperature in the main for the Indirect Heater using Priority. The Tekmar 265 also controls each boiler's pump and a post purge of leftover temperature in the boilers will occur at the end of the call for Indirect Hot Water.

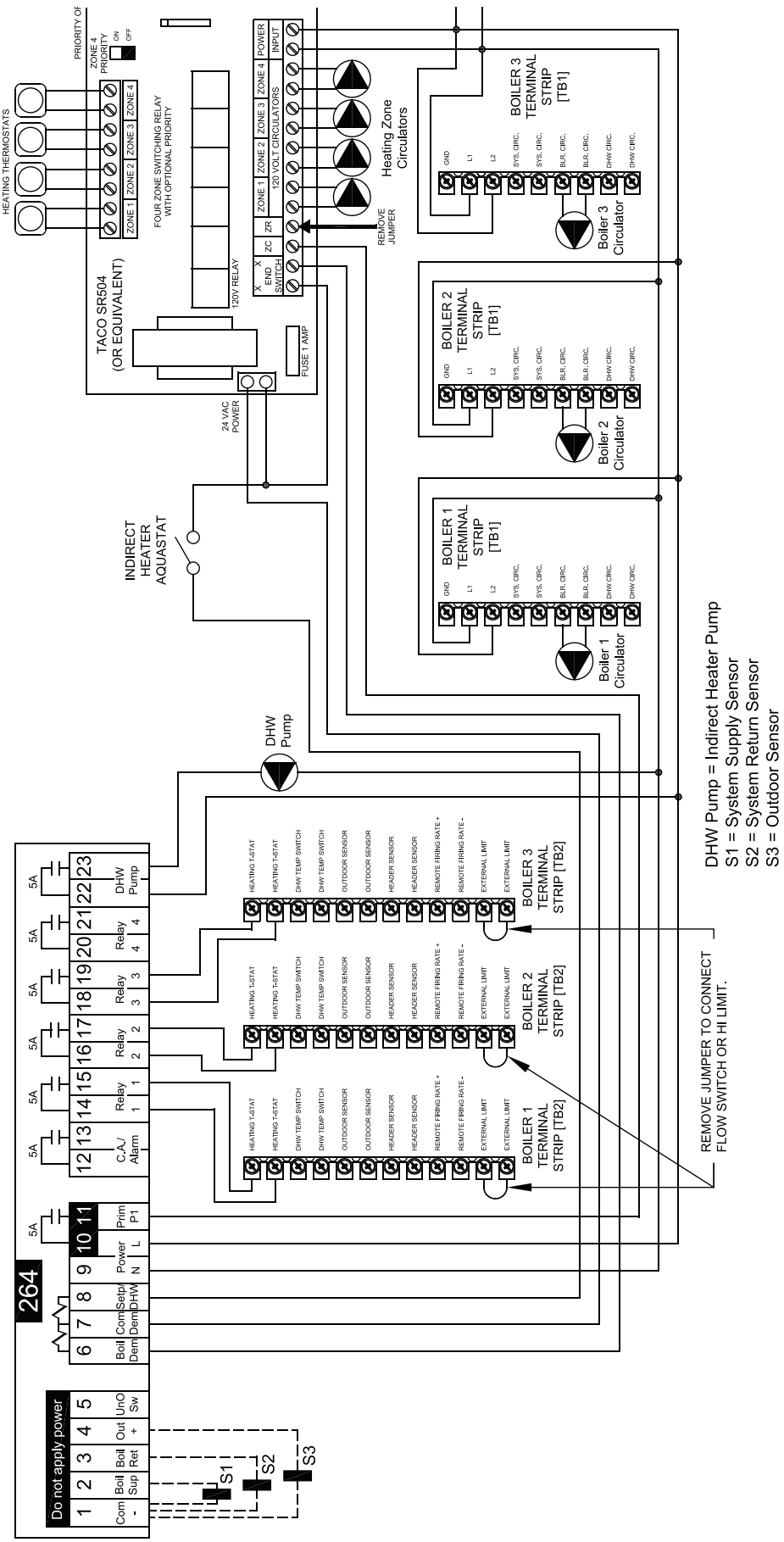

Figure 31B: Multiple Boiler Wiring Diagram w/Tekmar 264 Control

Tekmar 264 Based Control System (or equal)
Sequence of Operation

The Tekmar 264 Control (or equal) can control up to four (4) boilers and an Indirect Water Heater by utilizing stage firing. When a call for heat is received by the Tekmar 264 Control, the control will fire either one or more boilers in sequential firing mode to establish a required reset water temperature in the system supply main based on outdoor temperature. The boilers will modulate on their own based on each boiler's Sage2.X Control and will target a setpoint temperature to supply enough input to the system main to satisfy the desired reset water temperature in the main established by the Tekmar 264 Control. When a call for Indirect Hot Water is generated to the Tekmar 264, the control will de-energize the zone pump control (ZC terminal), energize the Indirect pump and sequentially fire the boilers to establish a setpoint temperature in the main for the Indirect Heater using Priority. The Tekmar 264 Control will disable the stage firing and post purge the Indirect Pump to reduce the temperature in the Supply Main near the end of the Indirect Mode to a point where it will need to be when it changes back to Space Heating Mode. The Tekmar 264 Control also has the ability to rotate the lead-lag firing of the boilers to establish equal operating time for each boiler stage.

G. Multiple Boiler Operating Information

1. Required Equipment and Setup

a. Header Sensor (P/N 101935-01 or 103104-01).

A header sensor must be installed and wired to the Master Sequencer "enabled" Sage2.X Controller. The header sensor is installed on the common system piping and provides blended temperature information to the Sequence Master. Refer to piping diagram Figure 24A on page 64 for installation location and Figure 32 or 33 for installation detail.

b. RJ45 Splitters (P/N 103192-01)

RJ45 Splitters are required for installing communications between three or more boilers. When two boilers are connected the splitter is not required.

c. Ethernet Cables

Ethernet cables are used to connect the boiler network together. These are standard "straight through" cables that can be purchased at electrical distributors.

Alternately, the network can be wired together by simply wiring terminal J3, Modbus 2, terminals A, B and V- between each boiler. Refer to Figures 27 and 28 terminal J3 for wiring location.

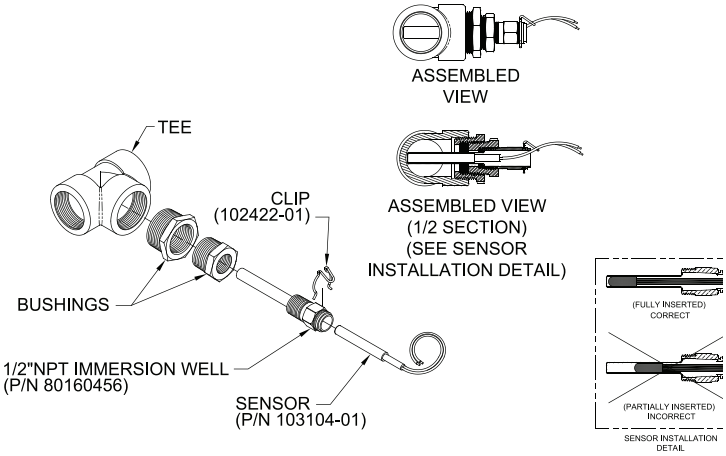

Figure 32: Recommended "Immersion" Type Header Sensor Installation Detail

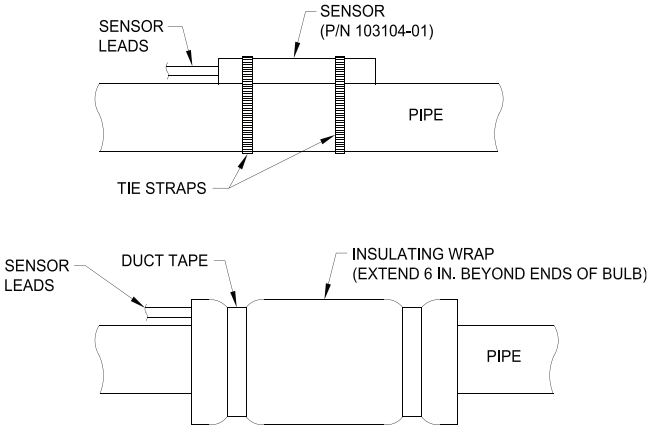

Note: The "Strap-On" type sensor must be mounted to the top side of a horizontal section of pipe as indicated in Figures 24A and 25A.

Figure 33: Alternate "Strap-On" Type Header Sensor Installation Detail

1. Required Equipment and Setup (continued)

Multiple Boiler Communication Network

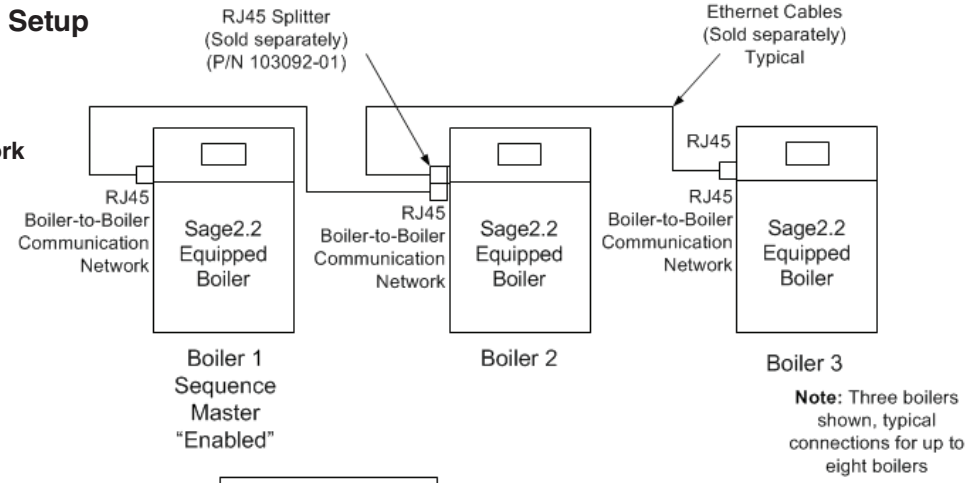

TWO Boiler Communication Network

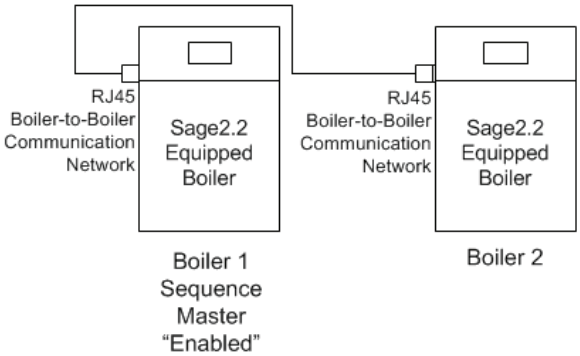

Figure 34: RJ45 Splitter Installation Detail

d. Multiple Boiler Setup

Step	Description	Comments
1	Install and wire the Header Sensor	Wire the header sensor to low voltage terminal strip terminals "Header sensor". **NOTE** This step can not be skipped. The Sequence Master can not be "enabled"unless a Header Sensor is installed.
2	Install Ethernet Cables between boilers	Standard Ethernet type cables with RJ45 connectors are "plugged in" to the Boiler-to-Boiler Communication Network connection located on the side of the boiler. When more than two boilers are connected an RJ45 splitter may be used to connect the boilers. Refer to Figure 34.
3	Apply Power to All Boilers	
4	Set Unique Boiler Addresses	Assign all boilers a unique Boiler Address using any number from 1 through 8. **WARNING** When two boiler's addresses are the same undesirable simultaneous operation occurs.
5	Enable 1 Boiler Master	Enable only one Control's Sequencer Master. **WARNING** When more than one Sequencer Master is enable erratic behavior will result.
6	Power Down All Boilers	
7	Power Up Master Sequencer "Enabled" Boiler First	
8	Power Up Other Boilers	
9	Confirm Communication	From the Home Screen of the Control with the Master Sequencer "enabled", select the Status button. The Sequencer display shows the boiler address of the communicating boilers. Additionally, from the "Home" screen select the "Detail" button and then the "Networked Boilers" buttons to view boiler communication status. If a boiler is not shown, check Ethernet cable connections and confirm all boilers have unique addresses.

WARNING **Explosion Hazard. Asphyxiation Hazard. Electrical Shock Hazard. Start-up of this boiler should be undertaken only by trained and skilled personnel from a qualified service agency. Follow these instructions exactly. Improper installation adjustment, service or maintenance can cause property damage, personal injury or loss of life.**

A. **Verify that the venting, water piping, gas piping and electrical system are installed properly.** Refer to installation instructions contained in this manual.

B. **Confirm all electrical, water and gas supplies are turned off at the source** and that vent is clear of obstructions.

C. **Confirm that all manual shut-off gas valves** between the boiler and gas source are closed.

D. **If not already done,** flush the system to remove sediment, flux and traces of boiler additives. This must be done with the boiler isolated from the system. Fill entire heating system with water meeting the following requirements:

NOTICE **pH between 7.5 and 9.5.**
If system contains aluminum components, pH must be less than 8.5
Chlorides< 50 ppm

Total Dissolved Solids - less than 2500 PPM
Hardness - 3 to 9 grains/gallon.

Pressurize the system to at least 20 psi (140 kPa). Purge air from the system.

WARNING **Burn Hazard. The maximum operating pressure of this boiler is 30 psig (210 kPa), 50 psig**

(340 kPa), 80 psig (550 kPa) or 100 psig (689 kPa) depending on the model and safety relief valve option selected. Never exceed the maximum allowable working pressure on the heat exchanger ASME plate.

E. **Confirm that the boiler and system have no water leaks.**

F. **Prepare to check operation.**

1. **Obtain gas heating value** (in Btu per cubic foot) from gas supplier.
2. **Alpine gas valves have inlet and outlet pressure taps** with built-in shut off screw. Turn each screw from fully closed position three to four turns counterclockwise to open taps. Connect manometers to pressure taps on gas valve.

NOTICE **If it is required to perform a long term pressure test of the hydronic system, the boiler should first be isolated to avoid a pressure loss due to the escape of air trapped in the boiler.**

To perform a long term pressure test including the boiler, ALL trapped air must first be removed from the boiler.

A loss of pressure during such a test, with no visible water leakage, is an indication that the boiler contained trapped air.

3. **Temporarily turn off** all other gas-fired appliances.
4. **Turn** on gas supply to the boiler gas piping.
5. **Open** the field installed manual gas shut-off valve located upstream of the gas valve on the boiler.
6. **Confirm** that the supply pressure to the gas valve is 13.5 in wc (3.4 kPa) or less. Refer to Table 20 on page 72 for minimum supply pressure.
7. **Using soap solution,** or similar non-combustible solution, electronic leak detector or other approved method, check that boiler gas piping valves, and all other components are leak free. Eliminate any leaks.

DANGER **Explosion Hazard. Do not use matches, candles, open flames or other ignition source to check for leaks.**

8. **Purge gas line of air.**

G. **Operating Instructions**

Start the boiler using the Operating Instructions, see Figure 35. After the boiler is powered up, it should go through sequence of operation shown in Table 28 on page 100.

H. **Purge Air From Gas Train**

Upon initial start-up, the gas train will be filled with air. Even if the gas line has been completely purged of air, it may take several tries for ignition before a flame is established. If more than 2 tries for ignition are needed, it will be necessary to press the reset button to restart the boiler. Once a flame has been established for the first time, subsequent calls for burner operation should result in a flame on the first try.

Alpine™ Series Lighting and Operating Instructions

FOR YOUR SAFETY READ BEFORE OPERATING/POUR VOTRE SECURITE LISEZ AVANT DE METTRE EN MARCHE

WARNING: If you do not follow these instructions exactly, a fire or explosion may result causing property damage, personal injury or loss of life.

AVERTISSEMENT: Quiconque ne respecte pas à la lettre les instructions dans la présente notice risque de déclencher un incendie ou une explosion entraînant des dommages, des blessures ou la mort.

A. This appliance does not have a pilot. It is equipped with an ignition device which automatically lights the burner. Do not try to light the burner by hand.

B. BEFORE OPERATING smell all around the appliance area for gas. Be sure to smell next to the floor because some gas is heavier than air and will settle on the floor.

WHAT TO DO IF YOU SMELL GAS:

- Do not try to light any appliance.
- Do not touch any electric switch; do not use any phone in your building.
- Immediately call your gas supplier from a neighbor's phone. Follow the gas supplier's instructions.
- If you cannot reach your gas supplier, call the fire department.

C. Use only your hand to turn the gas control knob. Never use tools. If the knob will not turn by hand, don't try to repair it, call a qualified service technician. Force or attempted repair may result in a fire or explosion.

D. Do not use this appliance if any part has been under water. Immediately call a qualified service technician to inspect the appliance and to replace any part of the control system and any gas control which has been under water.

A. Cet appareil ne comporte pas de veilleuse. Il est muni d'un dispositif d'allumage qui allume automatiquement le brûleur. Ne tentez pas d'allumer le brûleur manuellement.

B. AVANT DE FAIRE FONCTIONNER, reniflez tout autour de l'appareil pour déceler une odeur de gaz. Reniflez près du plancher, car certains gaz sont plus lourds que l'air et peuvent s'accumuler au niveau du sol.

QUE FAIRE SI VOUS SENTEZ UNE ODEUR DE GAZ:

- **Ne pas tenter d'allumer d'appareil.**
- **Ne touchez à aucun interrupteur ; ne pas vous servir des téléphones se trouvant dans le bâtiment.**
- **Appelez immédiatement votre fournisseur de gaz depuis un voisin. Suivez les instructions du fournisseur.**
- **Si vous ne pouvez rejoindre le fournisseur, appelez le service des incendies.**

C. Ne poussez ou tournez la manette d'admission du gaz qu'à la main ; ne jamais utiliser d'outil. Si la manette reste coincée, ne pas tenter de la réparer ; appelez un technicien qualifié. Le fait de forcer la manette ou de la réparer peut déclencher une explosion ou un incendie.

D. N'utilisez pas cet appareil s'il a été plongé dans l'eau, même partiellement. Faites inspecter l'appareil par un technicien qualifié et remplacez toute partie du système de contrôle et toute commande qui ont été plongés dans l'eau.

OPERATING INSTRUCTIONS/ INSTRUCTIONS DE FONCTIONNEMENT

1. STOP! Read safety information above on this label.
2. Set the thermostat to lowest setting.
3. Turn off all electric power to the appliance.
4. This appliance is equipped with an ignition device which automatically lights the burner. Do not try to light the burner by hand.
5. Turn the external boiler manual gas valve handle clockwise to close the gas supply.
6. Wait five (5) minutes to clear out any gas. Then smell for gas, including near the floor. If you smell gas, STOP! Follow "B" in the safety information above on this label. If you don't smell gas, go to the next step.
7. Turn the external boiler manual gas valve handle counterclockwise to open the gas supply.
8. Turn on all electric power to the appliance.
9. Set the thermostat to the desired setting.
10. If the appliance will not operate, follow the instructions "To Turn Off Gas To Appliance" and call your service technician or gas supplier.

1. ARRÊTEZ ! Lisez les instructions de sécurité sur la portion supérieure cette étiquette.
2. Réglez le thermostat à la température la plus basse.
3. Coupez l'alimentation électrique de l'appareil.
4. Cet appareil est équipé de l' dispositif d'allumage qui automobile allume maticallyle brûleur. Ne tentez pas d'allumer le brûleur manuellement.
5. Tourner la chaudière externe manuelle poignée en clapet à gaz dans le sens des aiguilles d'une montre pour fermer l'offre de gaz.
6. Attendre cinq (5) minutes pour laisser échapper tout le gaz. Reniflez tout autour de l'appareil, y compris près du plancher, pour déceler une odeur de gaz. Si vous seutez une odeur de gaz, ARRÊTEZ ! Passez à l'étape B des instructions de sécurité sur la portion supérieure de cette étiquette. S'il n'y a pas d'odeur de gaz, passez à l'étape suivante.
7. Tourner la chaudière externe manuelle compteur de poignée en clapet à gaz ouvrir dans le sens des aiguilles d'une montre le gaz approvisionnement.
8. Mettez l'appareil sous tension.
9. Réglez le thermostat à la température désirée.
10. Si l'appareil ne se met pas en marche, suivez les instructions intitulées « Comment couper l'admission de gaz de l'appareil » et appelez un technicien qualifié ou le fournisseur de gaz.

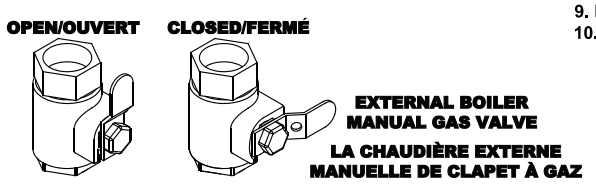

TO TURN OFF GAS TO APPLIANCE/ COMMENT COUPER L'ADMISSION DE GAZ DE L'APPAREIL

1. Set the thermostat to lowest setting.
2. Turn off all electirc power to the appliance if service is to be performed.
3. Turn the external boiler manual gas valve handle clockwise to close gas supply.

1. Réglez le thermostat à la température la plus basse.
2. Coupez l'alimentation électrique de l'appareil s'il faut procéder à l'entretien.
3. Tourner la chaudière externe manuelle poignée en clapet à gaz dans le sens des aiguilles d'une montre pour fermer l'offre de gaz.

Figure 35: Operating Instructions

Status	Control Action
Initiate	Power-up
Standby Delay	This state is entered when a delay is needed before allowing the burner control to be available and for sensor errors.
Standby	Boiler is not firing. There is no call for heat or there is a call for heat and the temperature is greater than setpoint.
Safe Startup	Tests flame circuit then checks for flame signal.
Drive Purge	Driving blower to purge rate setting and waiting for the proper fan feedback.
Prepurge	Purges the combustion chamber for the 10 second purge time.
Drive Light-off	Driving blower to light-off rate setting and waiting for the proper fan feedback.
Pre-ignition Test	Tests the safety relay and verifies that downstream contacts are off.
Pre-ignition	Energizes the igniter and checks for flame.
Direct Ignition	Opens main fuel valve and attempts to ignite the main fuel directly from the ignition source.
Running	Normal boiler operation. Modulation rate depends on temperature and setpoint selections and modulating control action.
Postpurge	Purges the combustion chamber for the 30 second purge time.
Lockout	Prevents system from running due to a detected problem and records fault in Lockout History.

I. Check Burner Flame

Inspect the flame visible through the window. On high fire the flame should be stable and mostly blue (Figure 36). No yellow tipping should be present; however, intermittent flecks of yellow and orange in the flame are normal.

WARNING **Asphyxiation Hazard. The outlet pressure for the gas valve has been factory set and requires no field adjustment. This setting is satisfactory for both natural gas and propane. Attempting to adjust the outlet pressure may result in damage to the gas valve and cause property damage, personal injury or loss of life.**

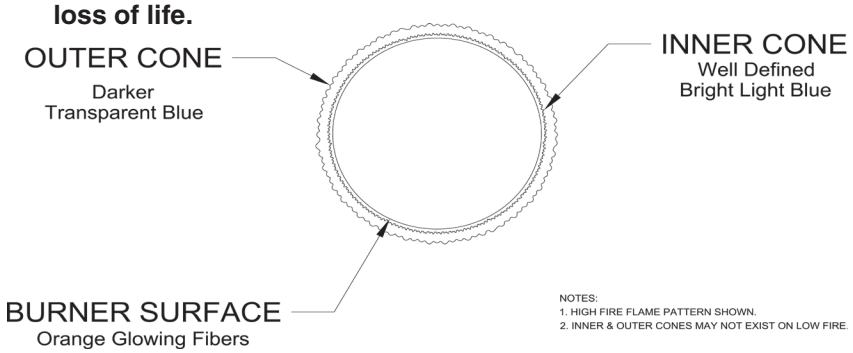

Figure 36: Burner Flame

J. Check Gas Inlet Pressure

Check the inlet pressure and adjust if necessary. Verify that the inlet pressure is between the upper and lower limits shown on the rating plate with all gas appliances on and off.

K. For LP Gas, perform procedure as described in Paragraph R "Field Conversion From Natural Gas to LP Gas" before starting Paragraph L "Checking/Adjusting Gas Input Rate".

For natural gas, proceed to Paragraph L "Checking/Adjusting Gas Input Rate".

L. Perform Combustion Test

WARNING **Asphyxiation Hazard. Each Alpine Series boiler is tested at the factory and adjustments to the air fuel mixture are normally not necessary. Improper gas valve or mixture adjustments could result in property damage, personal injury or loss of life.**

Any gas valve adjustments (throttle and/or offset) specified herein and subsequent combustion data (%O_2, %CO_2, CO ppm) collection must be performed using a calibrated combustion analyzer.

1. **Remove flue temperature sensor** from vent connector (see Figure 9) and insert combustion analyzer probe through flue temperature sensor silicon cap opening. If required, also remove the flue temperature sensor silicon cap and insert the analyzer probe directly into flue sensor port. Reinstall the sensor and the cap upon combustion testing completion.
2. **Verify O_2 (or CO_2) and CO are within limits** specified in Table 22 (natural gas) or Table 23 (LP gas) at both high and low fire as described in the following steps.
   a. Lock boiler in high fire and allow boiler to operate for approximately 5 minutes before taking combustion readings. To lock boiler in high fire, from the home screen, press "Adjust", "Adjust", "Login", "000". Enter the password "086" and press return arrow to close the keypad. Press "Save", "Adjust", "High" to lock boiler in high fire.

Table 22: Typical Combustion Settings, Natural Gas

Boiler Model	Altitude Range 0 - 7000 Ft.		
	% CO_2	% O_2 Range	CO, PPM
ALP080B	9.9 - 8.2 (High Fire)	3.5 - 6.5 (High Fire)	Less than 100 PPM
ALP105B			
ALP150B			
ALP210B	9.9 - 7.9 (Low Fire)	3.5 - 7.0 (Low Fire)	
ALP285B			

Table 23: Typical Combustion Settings, LP Gas

Boiler Model	Altitude Range 0 - 7000 Ft.		
	% CO_2	% O_2 Range	CO, PPM
ALP080B	11.4 - 9.5 (High Fire)	3.5 - 6.5 (High Fire)	Less than 100 PPM
ALP105B			
ALP150B			
ALP210B	11.4 - 9.1 (Low Fire)	3.5 - 7.0 (Low Fire)	
ALP285B			

WARNING **Make sure that all adjustments at high fire are made with the throttle, not the offset screw (see Figure 37). The offset screw has been factory set using precision instruments and must never be adjusted in the field unnecessarily.**

Attempting to adjust the offset screw unnecessarily could result in damage to the gas valve and may cause property damage, personal injury or loss of life.

b. If high fire O_2 is too low (CO_2 is too high), increase O_2 (decrease CO_2) by turning the throttle screw clockwise in 1/4 turn increments and checking the O_2 (or CO_2) after each adjustment. If boiler is equipped with 2 gas valves, throttle screw adjustments must be done to both gas valves equally and simultaneously. Refer to Figure 37 for location of throttle screw. Verify CO is less than 100 ppm.

c. If high fire O_2 is too high (CO_2 is too low), decrease O_2 (increase CO_2) by turning the throttle screw counter-clockwise in 1/4 turn increments and checking the O_2 (or CO_2) after each adjustment. If boiler is equipped with 2 gas valves, throttle screw adjustments must be done to both gas valves equally and simultaneously. Refer to Figure 37 for location of throttle screw. Verify CO is less than 100 ppm.

d. Lock boiler in low fire and allow boiler to operate for approximately 5 minutes before taking combustion readings. Press “Low” to lock boiler in low fire.

WARNING **Asphyxiation Hazard. Offset screw is adjusted at the factory to the specification. DO NOT touch the offset screw if measured low fire O_2 (or CO_2) is within limits specified in Table 21 or 22.**

e. If low fire O_2 is too low (CO_2 is too high), increase O_2 (decrease CO_2) by turning offset screw counterclockwise in less than 1/8 turn increments and checking the O_2 (or CO_2) after each adjustment. If boiler is equipped with 2 gas valves, offset screw adjustments must be done to both gas valves equally and simultaneously. Refer to Figure 37 for location of offset screw. Verify CO is less than 100 ppm.

f. If low fire O_2 is too high (CO_2 is too low), decrease O_2 (increase CO_2) by turning offset screw clockwise in less than 1/8 turn increments and checking the O_2 (or CO_2) after each adjustment. If boiler is equipped with 2 gas valves, offset screw adjustments must be done to both gas valves equally and simultaneously. Refer to Figure 37 for location of offset screw. Verify CO is less than 100 ppm.

WARNING **Asphyxiation Hazard. Install flue temperature sensor and sensor cap into two-pipe vent connector port upon completion of combustion test. Failure to properly secure the flue temperature sensor into the port could lead to property damage, personal injury or loss of life.**

3. Reinstall flue temperature sensor with sensor cap into two-pipe vent adapter.
   a. Inspect flue temperature sensor cap for degradation. Replace if needed.
   b. Use Molykote 111 grease to lubricate outer surface of two-pipe vent adapter stub where flue temperature sensor is inserted. Also lubricate tip of flue temperature sensor. Reinstall flue temperature sensor with cap into two-pipe vent adapter.
4. **Return boiler** to normal operating mode by pressing “Auto”.

M. Checking / Adjusting Gas Input Rate

1. **Turn** off gas supply to all appliances other than gas-fired boiler.
2. **Lock the boiler in high fire,** following Step 2a in Paragraph L.
3. **Clock gas meter** for at least 2 revolutions of the dial, typically labeled ½ or 1 cubic foot per revolution on the gas meter.
4. **Determine gas flow rate** in cubic feet per hour based on elapsed time for 2 revolutions.

Example:

Using a meter with dial labeled 1 cubic foot per revolution, measured time is 72 seconds for 2 Revolutions, i.e. 36 seconds per 1 cubic foot.

Calculate hourly gas flow rate:

3600 sec/hr ÷ 36 sec/cu ft = 100 cu ft/hr

5. **Obtain gas-heating value** (BTU per cubic foot) from gas supplier.
6. **Multiply** hourly gas flow rate by gas heating value to determine the boiler input rate, BTU/hr

   Example:

   Natural gas heating value provided by local gas utility is 1050 BTU per cubic foot.

   Measured and calculated hourly gas flow rate is 100 cu ft/hr.

   Measured boiler input rate is:

   100 cu ft/hr * 1050 BTU/ cu ft = 105, 000 BTU/ hr
7. **Verify measured input rate** is within 88% to 100% of the max. input listed on the boiler rating label.
8. **If measured input is too high,** reduce maximum modulation fan speed (either central heat or domestic hot water, depending on source of call for heat) in increments of 50 RPM and check the input rate after each adjustment. Follow instructions in Section X. "Operation" to adjust the maximum modulation fan speed.
9. **If measured input is too low,** increase maximum modulation fan speed (either central heat or domestic hot water, depending on source of call for heat) in increments of 50 RPM and check the input rate after each adjustment. Follow instructions in Section X "Operation" to adjust the maximum modulation fan speed.
10. **Return boiler to normal operating mode** by pressing "Auto".
11. **Return** other gas-fired appliances to previous condition of use.

N. Test Safety Limits Controls

1. **Test the ignition system safety shut-off** by disconnecting the flame sensor connector (black plug with orange wire) from the flame ionization electrode. See Figure 27. The boiler must shut down and must not start with the flame sensor disconnected.
2. **Test low water cutoffs** (if used).
   a. Hydrolevel 1100H4 Autotmatic Reset LWCO (100592-01). Press TEST button to simulate low water condition. Amber "LOW WATER" LED should illuminate and burner should turn off.
   b. McDonnell & Miller 751 Manual Reset LWCO (80160718). Press TEST button for 30 seconds to activate test cycle; red LED will flash. When test cycle activated red LED will turn on and burner will turn off. Control must be reset by pressing MANUAL RESET to resume normal operation.
3. **Test any other external limits** or other controls in accordance with the manufacturer's instructions.

O. Check Thermostat Operation

Verify that the boiler starts and stops in response to calls for heat from the heating thermostat and indirect water heater thermostat. Make sure that the appropriate circulators also start and stop in response to the thermostats.

P. Adjust Supply Water Temperature

As shipped, the heating set point supply temperature is set to 180°F (82.2°C) and, indirect water heater set point supply temperature is set to 170°F (76.7°C). If necessary, adjust these to the appropriate settings for the type of system to which this boiler is connected. See Section X "Operation" (Parameter Table 29 on page 108) of this manual for information on how to adjust supply setpoint.

Q. Adjust Thermostats

Adjust the heating and indirect water heater thermostats to their final set points.

R. Field Conversion From Natural Gas to LP Gas

Alpine models ALP080 through ALP285 (-02, 27, 07 altitude code builds.) are factory shipped as natural gas builds and can be field converted to LP gas. Alpine models ALP150, ALP210 and ALP285 (-70 altitude code builds) are factory shipped as natural gas builds but are not permitted to be field converted to LP gas.

Follow steps below for field conversion from natural gas to LP Gas.

1. **Conversion** of Alpine models ALP080B through ALP285B (-02, 27, 07 altitude code builds) from one fuel to another is accomplished using the throttle screw on the gas valve. Figure 37 "Gas Valve Detail" shows the location of the throttle screw on the valve. Locate the throttle screw on the boiler being converted.
2. **If conversion is being made on a new installation,** install the boiler in accordance

WARNING Explosion Hazard. Asphyxiation Hazard. This conversion should be performed by a qualified service agency in accordance with the manufacturer's instructions and all applicable codes and requirements of the authority having jurisdiction. If the information in these instructions is not followed exactly, a fire, an explosion or production of carbon monoxide may result causing property damage, personal injury, or loss of life. The qualified service agency is responsible for proper conversion of these boilers. The conversion is not proper and complete until the operation of the converted appliance is checked as specified in this manual.

with the installation instructions supplied with the boiler. If an installed boiler is being converted, connect the new gas supply to the boiler, check for gas leaks, and purge the gas line up to the boiler in accordance with the *National Fuel Gas Code,* ANSI Z223.1/NFPA 54 and/or *Natural Gas and Propane Installation Code*, CAN/CSA B149.1 or the requirements of the authority having jurisdiction.

3. **Before attempting to start the boiler,** make the number of turns to the throttle screw called for in Table 24.
4. **Attempt to start the boiler** using the Operating Instructions located inside the lower front cover of the boiler. If the boiler does not light on the first try for ignition, allow to boiler to make at least four more attempts to light. If boiler still does not light, turn the throttle counter clockwise in 1/4 turn increments, allowing the boiler to make at least three tries for ignition at each setting, until the boiler lights.

WARNING Asphyxiation Hazard. The throttle adjustments shown in Table 24 are approximate. The final throttle setting must be found using a combustion analyzer. Leaving the boiler in operation with a CO level in excess of the value shown in Table 23 could result in injury or death from carbon monoxide poisoning.

5. **After the burner lights,** complete all steps outlined in Paragraph L "Perform Combustion Test" and Paragraph M "Checking/Adjusting Gas Input Rate" before proceeding.
6. **Verify** that the gas inlet pressure is between the upper and lower limits shown in Table 20 on page 72 with all gas appliances (including the converted boiler) both on and off.

Table 24: Number of Clockwise Throttle Screw Turns for LP Conversion

Boiler Model	Gas Valve	Throttle Screw Turns at Altitude Range
		0 - 7000 Ft.
ALP080B	Dungs GB-055 (½" NPT)	2¾
ALP105B		4
ALP150B		3¼
ALP210B		4
ALP285B	Dungs GB-057 (¾" NPT)	4½

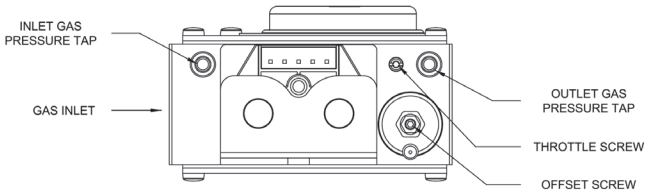

GB-WND 055 (½"NPT) - ALP080, ALP105, ALP150, ALP210

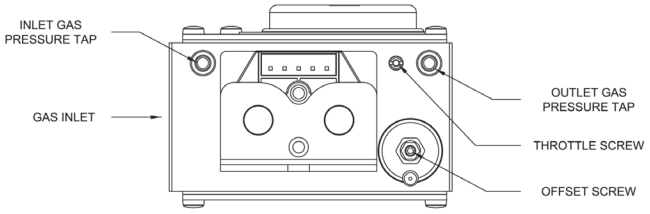

GB-WND 057 (¾"NPT) - ALP285

Figure 37: Dungs Gas Valve Detail

WARNING Asphyxiation Hazard. These instructions include a procedure for adjusting the air-fuel mixture on this boiler. This procedure requires a combustion analyzer to measure the O_2 (or CO_2) and Carbon Monoxide (CO) levels in flue gas. Adjusting the air-fuel mixture without a proper combustion analyzer could result in unreliable boiler operation, personal injury, or death due to carbon monoxide poisoning.

7. **A label sheet is provided** with the boiler for conversions from natural gas to LP gas. Once conversion is completed, apply labels as follows:
   a. Apply the "Rating Plate Label" adjacent to the rating plate.
   b. Apply the "Gas Valve Label" to a conspicuous area on the gas valve.

c. Apply the "Boiler Conversion Label" to a conspicuous surface on, or adjacent to, the outer boiler jacket. Fill in the date of the conversion and the name and address of the company making the conversion with a permanent marker.

S. Correcting Throttle Screw Mis-Adjustment (if required)

Alpine boilers are fire tested at factory and gas valve throttle screws are preset. However, if boiler does not start when first turned on, and, the problem cannot be remedied following "Help" prompts on the boiler control display, it may be necessary to reset and readjust the throttle screw according to the following instructions.

1. **Fully close throttle** by turning throttle screw clockwise until it fully stops.
2. **Open throttle screw** counter-clockwise the number of full (360 degrees) and partial turns listed in Table 25A for natural gas or Table 25B for LP gas.
3. **Follow instructions in Section L** "Perform Combustion Test" to verify O_2 (or CO_2) is within the range specified in Table 22 for natural gas or Table 23 for LP gas at both high fire and low fire.

WARNING **The throttle adjustment values shown in Table 25A and Table 25B are approximate. The final throttle setting must be found using a combustion analyzer.**

Table 25A: Approximate Throttle Screw Adjustment Values from Fully Closed Position, Natural Gas

Boiler Model	Throttle Position (Number of Counter-clockwise Turns from Fully Closed Position
ALP080B	6 & 3/4
ALP105B	8 & 1/4
ALP150B	8 & 1/4
ALP210B	9 &1/2
ALP285B	9

Table 25B: Approximate Throttle Screw Adjustment Values from Fully Closed Position, LP Gas

Boiler Model	Throttle Position (Number of Counter-clockwise Turns from Fully Closed Position
ALP080B	4
ALP105B	4 & 1/4
ALP150B	5
ALP210B	5 & 1/2
ALP285B	4 & 1/2

WARNING **Asphyxiation Hazard. If the throttle is very far out of adjustment on the "rich" (counter-clockwise) side, the boiler burner may be running at 0% excess air or even with air deficiency. Operating the boiler in this condition may cause property damage, personal injury or loss of life.**

At 0% excess air the CO_2 readings will be either 11.9% CO_2 for natural gas or 13.8% CO_2 for LP gas (O_2 will be 0%) and CO level will be extremely high (well over 1000 PPM).

If the burner operates with air deficiency, the following phenomena may be observed:

% CO_2 will actually drop (% O_2 will increase) as the throttle is turned counter-clockwise

% CO_2 will actually increase (% O_2 will drop) as the throttle is turned clockwise

If the boiler appears to operate with air deficiency, shut down the boiler and follow instructions in Paragraph S "Correcting Throttle Screws Mis-Adjustment. Then, use a combustion analyzer to verify and adjust O_2 (or CO_2) and CO to values shown in Table 22 for natural gas or Table 23 for LP gas.

T. Controls Startup Check List

The Control is factory programmed with default parameters. Before operating the boiler, these parameters must be checked and adjusted as necessary to conform to the site requirements. Follow the steps below, making selections and adjustments as necessary to ensure optimal boiler operation.

No.	Title	Terminal	Description
1	Check Wiring	1 & 2	Is the heating thermostat connected? Insure this is “dry”, non-powered input.
		2 & 3	Is an Indirect Water Heater (IWH) providing a boiler heat demand?
		5 & 6	Is an Outdoor Air sensor used? If no, select outdoor sensor type “not installed” under system menu.
		7 & 8	Is a header sensor used? If yes, refer to step 10 below to activate this feature.
		9 & 10	Is a Remote 4-20mA required for a Energy Management System or external multiple boiler control? If used see step 9 below to activate this input.
		11 & 12	Is an External Limit used? Remember to remove factory-installed jumper.
		LWCO Plug	Is a LWCO required? Check installation of the LWCO.

From the Home Screen press the Adjust button and login to access the adjust mode screens (if required, refer to X. Operation Section, “Entering Adjust Mode” Paragraph F, 1 for login instructions). The following parameters should be reviewed:

No.	Menu	Parameter	Description
2	System Setup	Warm Weather Shutdown	Selecting “Enable” will restrict boiler start during warm weather (only if an outdoor air temperature sensor is installed).
		Warm Weather Shutdown Setpoint	Use this setting to adjust the temperature that the WWSD function will shut boiler off.
3	Modulation Setup	Boiler Type	**WARNING** Confirm that the correct boiler model is shown. Stop installation and contact factory if the wrong boiler model is shown.
4	Pump Setup	System Pump	Ensure that the pump parameter selections are correct for your heating system. Refer to Paragraph F. Adjusting Parameters, Pump Setup Menu for additional information.
		Boiler Pump	
		Domestic Pump	
5	Contractor Setup	Contractor Name	Enter **your contact information**, name, address, and phone number on this screen. In the event of a fault or the need to adjust a setting the display will direct the homeowner to you.
		Address	
		Phone	
6	Manual Control	Manual Speed Control	Use the “High and “Low” options to force the boiler to high fire and low fire for combustion testing.
7	Central Heat	Setpoint	Ensure Setpoint, (firing rate target temperature) is correct for your type of radiation.
		Setback Setpoint	Check the setting for the central heat setpoint when the T-Stat “Sleep” or “Away” Setback mode is entered (if EnviraCOM Setback thermostat is used).
8	DHW	Setpoint	Ensure Setpoint, (firing rate target temperature) is suitable for the IWH requirements.
		Setback Setpoint	Check the setting for the DHW setpoint when the T-Stat “Sleep” or “Away” Setback mode is entered (if EnviraCOM Setback thermostat is used).
9	Remote 4-20mA	Modulation Source	Set to 4-20mA when an external multiple boiler controller is connected to the system.
		Setpoint Source	Set to 4-20mA when a Energy Management system is sending a “remote” setpoint.
10	Sequencer	Master Slave	Refer to Sequencer Master Setup Section X, G if multiple boilers are installed at this site.

A. Overview

1. Sage2.X Controller

The Sage2.X Controller (Control) contains features and capabilities which help improve heating system operation, and efficiency. By including unique capabilities, the Control can do more, with less field wiring, and fewer aftermarket controls and components – improving the operation of both new and replacement boiler installations.

2. Advanced Touch Screen Display

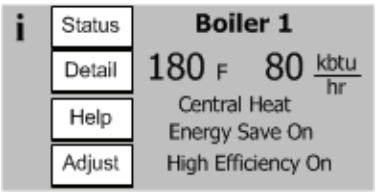

Home Screen

Boiler status and setup selections are available from an easy to use, dual color, LCD Touch Screen Display. Over one hundred helpful information screens are provided to explain status information and setup functions. In the event of a fault condition the user is guided by "blinking" touch buttons to Help screens that explain the problem cause and corrective action. Operation evaluation and problem-solving is enhanced by historical capability including graphic trends, lockout history records as well as boiler and circulator cycle counts and run time hours.

3. Advanced Modulating Control

The Control modulates the boiler input by varying the fan speed. As the fan speed increases, so does the amount of fuel gas drawn into the blower. As a result, a fairly constant air-fuel ratio is maintained across all inputs. The Control determines the input needed by looking at both current and recent differences between the measured temperature and the setpoint temperature. As the measured temperature approaches the setpoint temperature, the fan will slow down and the input will drop. The Control also utilizes boiler return water and flue gas temperatures to adjust fan speed.

4. HeatMatch™ Software

When the boiler is installed with a Sage Zone Control Panel (Zone Control) into a multiple zone home the Control uses a patent pending HeatMatch Software to improve home comfort, increase component life and save energy. The Sage2.X Controller with the Zone Control detects active (turned "on") zones, totals btu/hrs expected and limits the boiler firing rate to "match" actual home demand. Instead of simply firing to 100% in response to a cold supply water temperature the Control combines heat matching with supply water temperature control. The result is longer run times, dramatic reduction in boiler excessive cycling and higher operating efficiency. Avoiding extra cycling saves customer fuel dollars (pre and post purge sends heat up stack) and saves wear and tear on the boiler. Lowering the boiler's firing rate saves fuel dollars by increasing the amount of flue gas condensation, always the goal of condensing boiler installations.

5. Built-in Safety Control

The Control includes safety controls designed to ensure safe and reliable operation. In addition to flame safety controls the Control includes supply water temperature, differential water temperature, and stack temperature safety limits and stepped modulation responses. Boiler modulation is adjusted when required to help avoid loss of boiler operation due to exceeding limits. Additionally, the Control accepts the field installation of optional auxiliary safety limits.

6. Outdoor Air Reset

When selected the modulation rate setpoint is automatically adjusted based on outside air temperature, time of day and length of demand (boost) settings. Outdoor air "reset" setpoint saves fuel by adjusting the water temperature of a heating boiler lower as the outside air temperature increases.

7. Warm Weather Shutdown (WWSD)

Some boilers are used primarily for heating buildings, and the boilers can be automatically shutdown when the outdoor air temperature is warm. When outside air temperature is above the WWSD setpoint, this function will shut down the boiler and system pump.

8. Energy Management System (EMS) Interface

The control accepts a 4-20mAdc input from the EMS system for either direct modulation rate or setpoint.
A factory configured RS485 Modbus interface is available for Energy Management System (EMS) monitoring when not used for Multiple Boiler Sequencer Peer-To-Peer Network. Consult factory if this interface must be used in addition to the boiler Peer-to-Peer Network.

9. Circulator Control

The Control may be used to sequence the domestic hot water, boiler and system circulators. Service rated relay outputs are wired to a line voltage terminal block for easy field connection. Simple parameter selections allow all three pumps to respond properly to various hydronic piping arrangements including either a boiler or primary piped indirect water heater. Circulators are automatically run for a 20 second exercise period after not being used for longer than 7 days. Circulator exercise helps prevent pump rotor seizing.

10. Multiple Boiler Sequencer Peer-To-Peer Network

The Control includes state-of-the-art modulating lead-lag sequencer for up to eight (8) boilers capable of auto rotation, outdoor reset and peer-to-peer communication. The peer-peer network is truly "plug and play". Communication is activated by simply connecting a RJ45 ethernet cable between boilers. The Control provides precise boiler coordination by sequencing boilers based on both header water temperature and boiler modulation rate. For example, the lead boiler can be configured to start a lag boiler after operating at 50% modulation rate for longer than an adjustable time. The boilers are modulated in "unison" (parallel) modulation rate to ensure even heat distribution.

B. Supply Water Temperature Regulation

1. Priority Demand

The Control accepts a call for heat (demand) from multiple places and responds according to it's "Priority". When more than 1 demand is present the higher priority demand is used to determine active boiler settings. For example, when Domestic Hot Water (DHW) has priority the setpoint, "Diff Above", "Diff Below" and pump settings are taken from DHW selections. Active "Priority" is displayed on the "Boiler Status" screen.

Table 26: Order of Priority

Priority	Status Screen Display	Boiler Responding to:
1st	Sequencer Control	The boiler is connected to the peer-to-peer network. The boiler accepts demand from the Sequencer Master.
2nd	Domestic Hot Water	DHW call for heat is on and selected as the priority demand. DHW is always higher priority than Central Heat. It also has higher priority than the Sequencer Control when DHW priority is "enabled" and "Boiler Piped" IWH is selected.
3rd	Central Heat	Central Heat call for heat is on and there is no DHW demand or DHW priority time has expired.
4th	Auxiliary Heat	Auxiliary Heat call for heat is on and there is no Central Heat or DHW demand. (NOTE: May be user selected to be higher priority than Central Heat.)
5th	Frost Protection	Frost Protection is active and there is no other call for heat. Frost protection will be a higher priority than Sequencer Control if the Sequence Master has no active call for heat.
6th	Warm Weather Shutdown (WWSD)	WWSD is active and the boiler will not respond to central heat demands. DHW demand is not blocked by WWSD.
7th	Standby	There is no demand detected.

2. Setpoint Purpose

The Control starts and stops the boiler and modulates the boiler input from minimum (MBH) to maximum (MBH) in order to heat water up to the active setpoint. The setpoint is determined by the priority (Central Heat or Domestic Hot Water) and as described in the following paragraphs.

3. Central Heat Setpoint

Upon a Central Heat call for heat the setpoint is either the user entered Central Heat Setpoint, or is automatically adjusted by a thermostat's "Sleep" or "Away" modes and/or Outdoor Air Reset or, an Energy Management System (EMS) supplied 4-20mAdc setpoint.

4. Auxiliary Heat Setpoint

Auxiliary Heat is a second heating demand that may be used to serve either lower temperature radiation or warmer heat demands such as fan coils. Upon an Auxiliary Heat call for heat the setpoint is either the user entered Auxiliary Heat Setpoint or is automatically adjusted as a thermostat's "sleep" or, Away Modes or, Outdoor Air Reset.

5. Outdoor Air Reset

If an outdoor temperature sensor is connected to the boiler and Outdoor Reset is enabled, the Central Heat and Auxiliary Heat setpoints will automatically adjusted downwards as the outdoor temperature increases. When the water temperature is properly matched to heating needs there is minimal chance of room air temperature overshoot. Excessive heat is not sent to the room heating elements by "overheated" (supply water temperature maintained too high a setting) water. Reset control saves energy by reducing room over heating, reducing boiler temperature & increasing combustion efficiency and, reducing standby losses as a boiler and system piping cool down to ambient following room over heating.

6. Boost Time

When the Central Heat Setpoint is decreased by Outdoor Air Reset settings the Boost function can be enabled to increase the setpoint in the event that central heat demand is not satisfied for longer than the Boost Time minutes. The Boost feature increases the operating temperature setpoint by 10°F (5.6°C) every 20 minutes (field adjustable) the central heat demand is not satisfied. This process will continue until heat demand is satisfied (indoor air is at desired temperature). Once the heat demand is satisfied, the operating setpoint reverts to the value determined by the Outdoor Air Reset settings. If Boost Time is zero, then the boost function is not used.

7. Domestic Hot Water (DHW) Setpoint

Upon a DHW call for heat the setpoint is either the user entered DHW setpoint or the Thermostat's "Sleep" or "Away" DHW setpoint. The optimal value of this setpoint is established based on the requirements of the indirect water heater.

8. Domestic Hot Water Priority (DHWP)

Some boilers are used primarily for building space heating, but also provide heat for the domestic hot water users. When the outdoor temperature is warm, the outdoor reset setpoint may drop lower than a desirable domestic hot water temperature. Also, often it is required to quickly recover the indirect water heater. When DHWP is enabled, heating circulators are stopped, the domestic circulator is started and the domestic hot water setpoint is established in response to a domestic hot water demand. Priority protection is provided to allow the heating loop to be serviced again in the event of an excessively long domestic hot water call for heat.

9. "Setback" Setpoints

User adjustable Thermostat "Sleep" or "Away" Setback Setpoints are provided for both Central Heat and DHW demands. The Setback setpoint is used when the EnviraCOM thermostat is in "leave" or "sleep" modes. When setback is "on", the thermostat setback setpoint shifts the reset curve to save energy while the home is in reduced room temperature mode. The Honeywell VisionPro IAQ (part number TH9421C1004) is a "setback" EnviraCOM enabled thermostat.

C. Boiler Protection Features

1. Supply Water Temperature High Limit

The boiler is equipped with independent automatic reset and a manual reset high limit devices. A supply manifold mounted limit device provides the automatic reset high limit. The automatic high limit is set to 200°F (93.3°C). The control monitors a supply water temperature sensor that is also mounted in the supply water manifold and an internal, manual reset high limit If the temperature exceeds 210°F (98.9°C), a manual reset hard lockout results. If the boiler is responding to the internal Multiple Boiler Control Sequencer, Header Sensor or, an External EMS demand, and the supply water temperature increases above 190° F (87.7° C), the control begins to reduce the blower maximum speed setting and the temperature increases to 200° F (93.3° C), a forced recycle results. Additionally, if the supply temperature rises faster than the degrees Fahrenheit per second limit, a soft lockout is activated.

2. High Differential Temperature Limit

The Control monitors the temperature difference between the return and supply sensors. If this difference exceeds 43°F (23.9°C), the control begins to reduce the maximum blower speed. If temperature difference exceeds 53°F (29.4°C), a forced boiler recycle results. If the temperature difference exceeds 63°F (35°C), the control will shut the unit down. The unit will restart automatically once the temperature difference has decreased and the minimum off time has expired.

3. Return Temperature Higher Than Supply Temperature (Inversion Limit)

The Control monitors the supply and return temperature sensors. If the return water temperature exceeds the supply water temperature for longer than a limit time delay, the Control shuts down the boiler and delays restart. If the inverted temperature is detected more than five times, the boiler manual reset Hard Lockout is set. This condition is the result of incorrectly attaching the supply and return piping.

4. External Limit

An external limit control can be installed between terminals 11 and 12 on the low voltage terminal strip. Be sure to remove the jumper when adding an external limit control to the system. If the external limit opens, the boiler will shut down and an open limit indication and error code are provided. If the limit installed is a manual reset type, it will need to be reset before the boiler will operate.

5. Boiler Mounted Limit Devices

The Control monitors individual limit devices: pressure switch, high limit device, condensate level switch, Thermal Link (ALP285B only), Burner Door Thermostat with manual reset (ALP285B only) and external limit (optional). If any of these limits open, the boiler will shut down and an individual open limit indication is provided.

6. Stack High Limit

The Control monitors the flue gas temperature sensor located in the vent connector. If the flue temperature exceeds 184°F (84.4°C), the control begins to reduce the maximum blower speed. If the flue temperature exceeds 194°F (90.0°C), a forced boiler recycle results. If the flue temperature exceeds 204°F (95.6°C), the control activates a manual reset Hard Lockout.

7. Ignition Failure

The Control monitors ignition using a burner mounted flame sensor. In the event of an ignition failure, the control retries (ALP080B through ALP285B) 5 times and then goes into soft lockout for one hour.

8. Central Heating System Frost Protection

When enabled, Frost Protection starts the boiler and system pump and fires the boiler when low outside air and low supply water temperatures are sensed. The Control provides the following control action when frost protection is enabled:

Table 27: Frost Protection

Device Started	Start Temperatures	Stop Temperatures
Boiler & System Pump	Outside Air < -22°F (-30°C) Supply Water < 45°F (7.2°C)	Outside Air > -18°F (-28°C) Supply Water > 50°F (10°C)
Boiler	Supply Water < 38°F (3.3°C)	Supply Water > 50°F (10°C)

FROST PROTECTION NOTE

The Control helps provide freeze protection for the boiler water. Boiler flue gas condensate drain is not protected from freezing. Since the Control only controls the system and boiler circulators individual zones are not protected. It is recommended that the boiler be installed in a location that is not exposed to freezing temperatures.

D. Multiple Boiler Control Sequencer

1. "Plug & Play" Multiple Boiler Control Sequencer

When multiple boilers are installed, the Control's Sequencer may be used to coordinate and optimize the operation of up to eight (8) boilers. Boilers are connected into a "network" by simply "plugging in" standard ethernet cables into each boiler's "Boiler-To-Boiler Communication" RJ45 connection.

2. Sequencer Master

A single Control is parameter selected to be the Sequencer Master. The call for heat, outdoor and header sensors, and common pumps are wired to the Sequencer Master "enabled" Control.

3. Lead/Slave Sequencing & Equalized Run Time

One boiler is a "Lead" boiler and the remaining networked boilers are "Slaves". When demand is increasing, the Lead boiler is the first to start and the Slave boilers are started in sequential order (1,2,3,…) until the demand is satisfied. When demand is decreasing, the boilers are stopped in reverse order with the Lead boiler stopped last (…,3,2,1). To equalize the run time the sequencer automatically rotates the Lead boiler after 24 hours of run time.

4. Improved Availability

The following features help improve the heat availability:

a. Backup Header Sensor: In the event of a header sensor failure the lead boiler's supply sensor is used by the Sequence Master to control firing rate. This feature allows continued coordinated sequencer control even after a header sensor failure.

b. "Stand Alone" Operation Upon Sequence Master Failure: If the Sequence Master Control is powered down or disabled or if communication is lost between boilers, individual boilers may be setup to automatically resume control as a "stand alone" boiler.

c. Slave Boiler Rate Adjustment: Each slave boiler continues to monitor supply, return and flue gas temperatures and modifies the Sequence Master's firing rate demand to help avoid individual boiler faults, minimize boiler cycling and provide heat to the building efficiently.

d. Slave Boiler Status Monitoring: The Sequence Master monitors slave boiler lockout status and automatically skip over disabled boilers when starting a new slave boiler.

5. Customized Sequences

Normally, boilers are started and stopped in numerical order. However, custom sequences may be established to optimize the heat delivery. For example, in order to minimize boiler cycling, a large boiler may be selected to run first during winter months and then selected to run last for the remainder of the year.

6. Multiple Demands

The Sequence Master responds to Central Heat, Auxiliary Heat DHW and frost protection demands similar to the stand alone boiler. For example, when selected and DHW priority is active, the sequence master uses DHW setpoint, "Diff Above", "Diff Below" and pump settings.

7. Shared or Isolated DHW Demand

When the Indirect Water Heater (IWH) parameter is set to "Primary Piped" the Sequence Master sequences all required boilers to satisfy the DHW setpoint (default 180°F (82.2°C). When "Boiler Piped" is selected only the individual slave boiler, with the wired DHW demand and pump, fires to satisfy the DHW setpoint.

8. DHW Two boiler Start

When the Indirect Water Heater (IWH) parameter is set to "Primary Piped" and the DHW Two Boiler Start parameter is set to "Enabled" two boilers are started without delay in response to a DHW call for heat. This feature allows rapid recovery of large IWH's and multiple IWH's.

9. Optimized Boiler Modulation

Boiler firing rate is managed to increase smoothly as boilers are started. For example, when a second boiler is started the initial firing rate is 100%/2 or 50%, when the third boiler is started the firing rate starts at 200%/3 or 66%. After the initial start, the Sequence Master develops a unison firing rate demand based on it's setpoint and sensed header temperature.

10. Modulating Condensing Boiler Control

During low loads, the Sequence Master limits firing rates to a 'Base Load Common Rate" to ensure peak modulating condensing boiler operating efficiency. Lower firing rates boost efficiency by helping increase the amount of flue gas water vapor condensation. The Control maintains a "Base Load Common Rate" until the last lag boiler is started. At this point, the "Base Load Common Rate" is released to allow boilers to modulated as required to meet heat load.

11. Advanced Boiler Sequencing

After there is a Call For Heat input, both header water temperature and boiler firing rate percent are used to start and stop the networked boilers. The control starts and stops boilers when the water temperature is outside the user selected "Diff Above" and "Diff Below" settings. Also, in order to minimize temperature deviations, the control adjusts the number of boilers running based on the firing rate. This combination allows the boilers to anticipate slow load changes before they disrupt water temperature yet still respond quickly to sudden load changes. These special sequencer features help reduce energy wasting system temperature swings and the resulting unnecessary boiler cycling.

12. Stop All Boilers

All boilers are stopped without delay if the Call for Heat input is removed, or, if the header temperature is higher than 195°F (90.6°C) (field adjustable).

E. Boiler Sequence of Operation

1. Normal Operation

Table 28: Boiler Sequence of Operation

Status Screen Display	Description
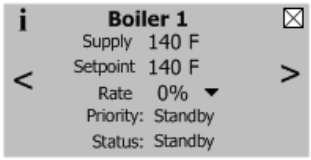 Priority: Standby Status: Standby	(burner **Off**, circulator(s) **Off**) Boiler is not firing and there is no call for heat, priority equals standby. The boiler is ready to respond to a call for heat.
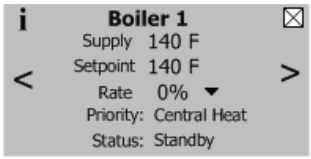 Priority: Central Heat Status: Standby	(burner **Off**, circulator(s) **On**) Boiler is not firing. There is a Central Heat call for heat and the Supply temperature is greater than setpoint minus the "Diff Below".
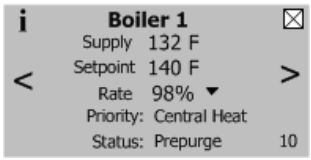 Priority: Central Heat Status: Prepurge	When supply temperature drops burner demand continues with following Status shown: Safe Startup: Flame circuit is tested. Drive purge: The blower is driven to the fan purge speed. Prepurge: After the blower reaches the fan purge speed setting the 10 second combustion chamber purge is conducted.
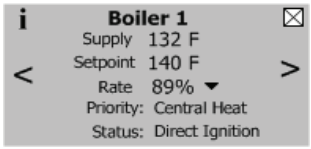 Priority: Central Heat Status: Direct ignition	After purge time is complete the following Status is shown: Drive light-off: The blower is driven to light-off rate. Pre-Ignition Test: After the blower reaches light-off rate a safety relay test is conducted. Pre-ignition: Spark is energized and it is confirmed that no flame is present Direct Ignition: Spark and Main fuel valve are energized.
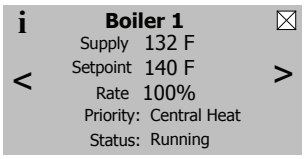 Priority: Central Heat Status: Running	(burner **On**, circulator(s) **On**) After flame is proven the sequence continues with run stabilization and low fire hold time. Once the field adjustable low fire hold time is completed normal boiler operation begins, modulation rate depending on temperature and setpoint selections.
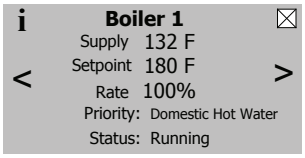 Priority: Domestic Hot Water Status: Running	If the Central Heat call for heat is active and a Domestic Hot Water (DHW) call for heat received the DHW demand becomes the "priority" and the modulation rate, setpoint, "Diff Above" and "Diff Below" are based on DHW settings.
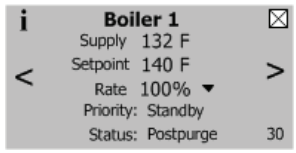 Priority: Standby Status: Post-purge	(burner **Off**, circulator(s) **Off**) If there is no call for heat, the main fuel valve is closed and, the blower is driven to the fan post-purge speed. After the blower reaches the fan post-purge speed setting, the 30-second combustion chamber purge is conducted.
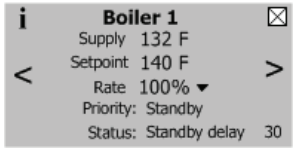 Priority: Standby Status: Standby Delay	Standby delay status is entered when a delay is needed, before allowing the burner control to be available. For example, when Anti-Short Cycle time is selected Standby delay is entered after the Central Heat call for heat ends. Select "Help" button from the "Home Screen" to determine the cause of the Standby Delay.
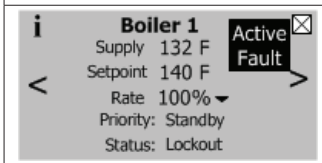 Priority: Standby **Status:** Lockout	A lockout Status is entered to prevent the boiler from running due to a detected problem. Select "Help" button from the "Home Screen" to determine the cause of the Lockout. The last 10 Lockouts are recorded in the Lockout History.

2. Using The Display

The Control includes a touch screen LCD display. The user monitors and adjusts boiler operation by selecting screen navigation "buttons" and symbols. The "Home Screen" and menu selections are shown below. When no selection is made, while viewing any screen, the display reverts to the "Home Screen" after 4 minutes. The "Home Screen" provides boiler temperature, firing rate in BTU/hr, boiler status, efficiency information and page links.

Menu Buttons
The Home Screen Menu Buttons connect the displays four main display groups:

Information Symbol
"Information" symbol links most screens to screen content explanations. New terminology used in status and adjustment screens are explained in plain words.

Fault Indication
In the event of a boiler fault the screen color turns red and the user is guided by "blinking" touch buttons to Help screens that explain the problem cause and corrective action.

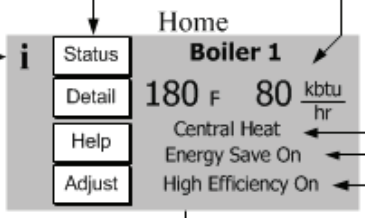

Rate
Firing rate is displayed as **kbtu/hr input**.

Demand Status
The reason or cause of the boiler demand is displayed; Central Heat, Auxiliary Heat, Domestic Hot Water, Sequencer Control (peer-to-peer Demand) or Frost Protection. Warm Weather Shutdown status is shown. "Standby' is shown when no demand is present.

Energy Save On Indication
Outdoor Air Reset, DHW or setback have lowered boiler water setpoint.

High Efficiency On Indication
Return temperature is low enough to allow energy saving flue gas condensation.

Status
"Walk through" operation

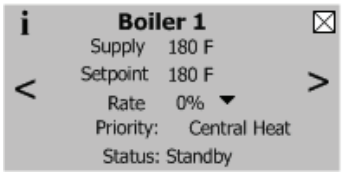

(see Figure 41)

Detail
In depth view of operation

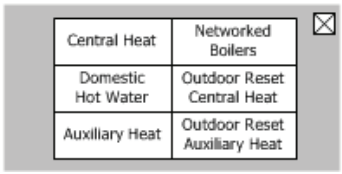

(see bottom of page 104)

Help
Fault correction & service contact

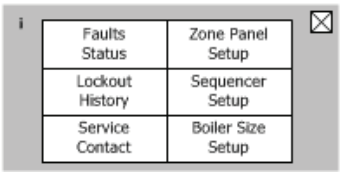

(see Figure 48)

Adjust
Modify boiler operation

(see Figure 42)

Figure 38: Home Screen Details

Status Screen

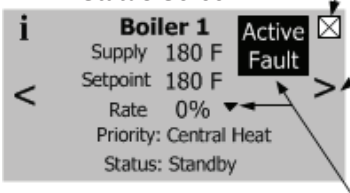

Close Symbol
The "Close" symbol returns to the display to previous menu or screen. Repeatedly pressing the "Close" symbol will always return the display to the "Home" screen.

Arrow Symbol
The "Arrow" symbol links together all screens in the selected group. For example, repeated pressing the right "Arrow" symbol will rotate the display around all the screens in the Status group. Using this feature the user can review all the boiler status and adjustment mode screens.

Fault Symbols
"Active Fault" and "Rate Limit" symbols provide a link to the cause of a boiler fault or firing rate limit. The first boiler status screen provides an overview of boiler operation including fault status.

Figure 39: Screen Navigation

3. Status Screens

Boiler Status screens are the primary boiler monitoring screens. The user may simply "walk" though boiler operation by repeatedly selecting the right or left "arrow" symbol. These screens are accessed by selected the "Status" button from the "Home" screen.

NOTE
Only visible if Zone Panel is connected. Zone Panel 1 and 2 shown typical for 1 through 4.

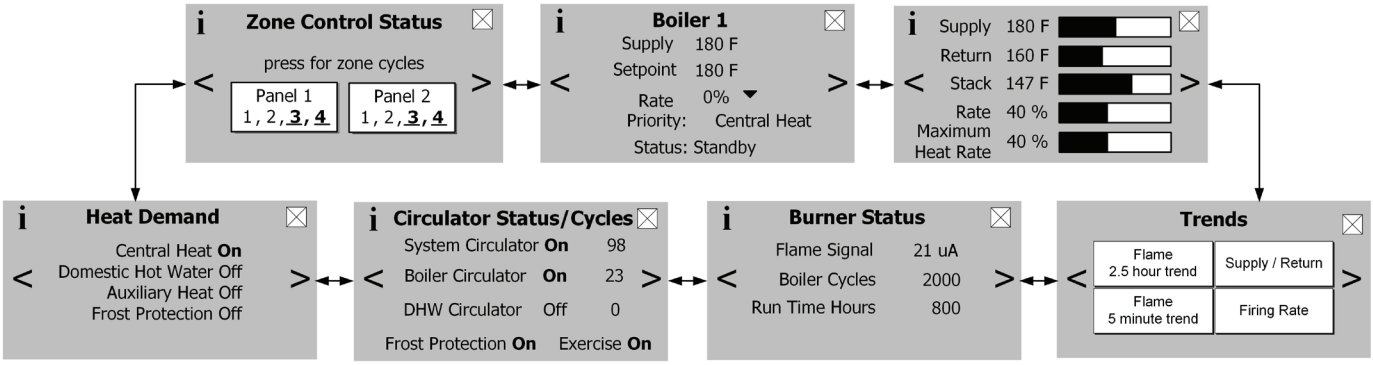

Figure 40: Status Screen Overview

Supply:
Measured supply water temperature. This is the temperature being used to start/stop and fire boiler when there is a call-for- heat. Header temperature is shown when selected.

Setpoint:
This is the active setpoint. This temperature setpoint determined based on active priority; Central Heat, Auxiliary Heat or Domestic Hot Water. The setpoint may be the result of Outdoor Air Reset and Setback selections.

Rate:
The rate % value is equal to the actual kbtu/hr input divided by the boiler rated input.

Priority:
The selected Priority is shown. Available Priorities are: Standby (no call for heat is present), Sequencer Control, Central Heat, Auxiliary Heat, Domestic Hot Water, Frost Protection or Warm Weather Shutdown.

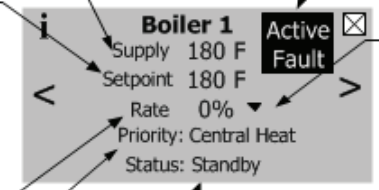

Status:
Information found at the bottom of the Status screen and on the Home screen. Table 28 shows each status and the action the control takes during the condition.

Active fault:
A hard lockout will cause the active fault indication to appear. When visible the text becomes a screen link to the "Help" Menu.

Rate Limit:
The "6" symbol appears to the right of the Rate % when firing rate is limited or overridden in any way. During the start-up and shutdown sequence it is normal for the rate to be overridden by the purge, light-off and low fire hold requirements. When a rate limit is the result of boiler protection logic the "6" symbol blinks and becomes a screen link.

Figure 41: Boiler Status Screen Detail

3. Status Screens (continued)

Bargraph Screen

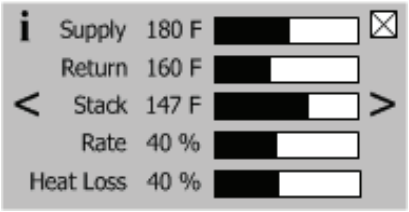

Bargraph Screen
The bargraph screen presents measured values for easy comparison. Included on this screen is firing rate and when the Zone Panel is connected the measure Heat Loss. Measured heat loss is the heat rate kbtu/hr sum of all active (call for heat) zones. This value represents the maximum required firing rate.

Trend Screens

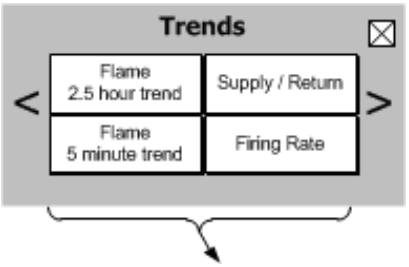

Data Logging
Real time graphic trends allow users to observe process changes over time providing valuable diagnostic information. For example, flame current performance over start up periods and varying loads can be an indication of gas supply issues. Additionally, supply and return temperature dual pen trends brings a focused look at heat exchanger and pump performance. For example, studying a differential temperature trend may indicate pump speed settings need to be changed.

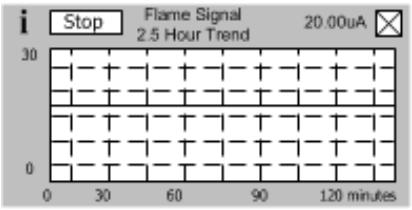

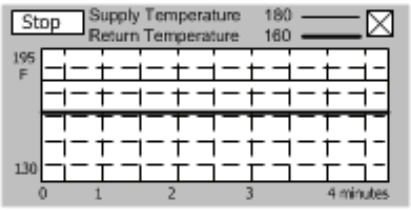

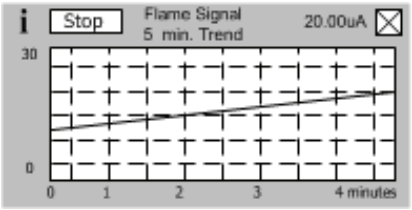

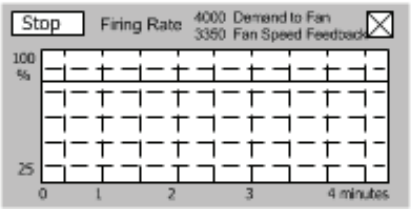

NOTE
Firing Rate Trend shows fan demand and feedback.

Burner Status Screen

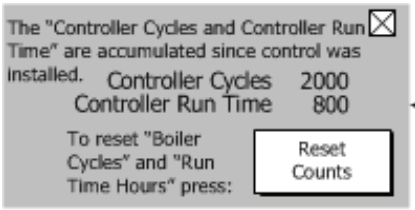

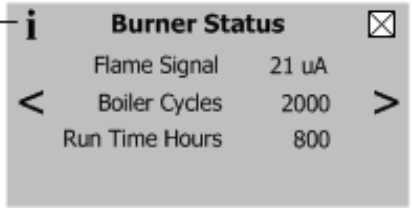

Cycles and Hours
Boiler cycles and hours are used to monitor the boilers overall compatibility to the heating load. Excessive cycling compared to run time house may be an indication of pumping, boiler sizing or adjustment issues.

NOTE
"Boiler Cycle" and "Run Time Hours" are resettable by selecting the "Reset Counts" button located on the information screen. The "Controller Cycles" and "Controller Run Time" data is not resettable and remains for the life of the control.

Circulator Status Screen

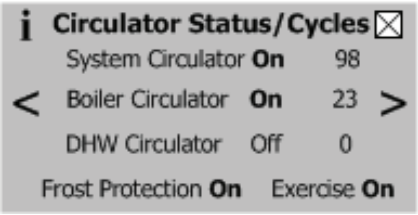

Pumping is a major part of any hydronic system. This screen provides the status of the boiler's demand to connected pumps as well as the status of Frost Protection and pump Exercise functions.

Head Demand Screen

This screen provides the status of the boilers five (5) possible heat demands. When demand is off the Control has not detected the call-for-heat. This screen allows the user to determine which demands are present when more than one demand is present.

Zone Control Status Screens

NOTE
Only visible if Zone Panel is connected. Zone Panel 1 and 2 shown typical for 1 through 4.

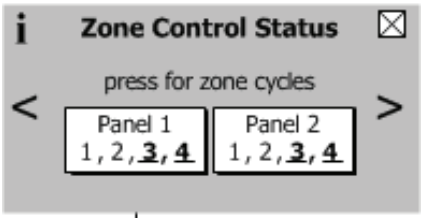

Zone Control Status
Screen provides status and a page links for up to four zone panels. Individual zone "on" status is shown by a bold zone number with a solid underscore. "Press" the zone control "button" to view individual zone .

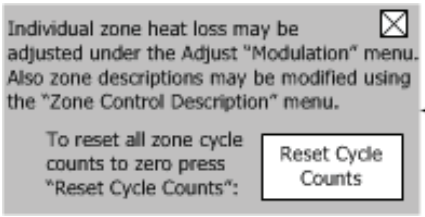

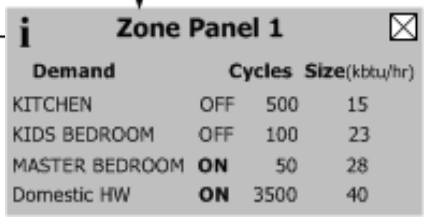

Zone Panel 1 (typical for 2 through 4)
Zone panel screens show individual zone status, cycle counts and individual zone heat loss size in kbtu/hr. Individual zone heat loss may be adjusted under the Adjust "Modulation" menu. Also zone descriptions may be modified using the "Zone Control Description Setup" menu.

NOTE
Zone cycles are resettable by selecting the "Reset Cycle Counts" button located on the information screen.

4. Detail Screens

Detail screens are accessed by selecting the "Detail" button from the "Home" screen. These screens provide in depth operating parameter status such as "On Point", "Off Point" and "Setpoint Source" information. Demand-specific details are provided for Central Heat, Auxiliary Heat, Domestic Hot Water and the Sequence Master demands. Detail screens also provide details on outdoor air reset and Sequencer network status. Sequencer screens are only shown when the Sequence Master is enabled and, Auxiliary Heat screen is only shown when a Zone Panel is connected.

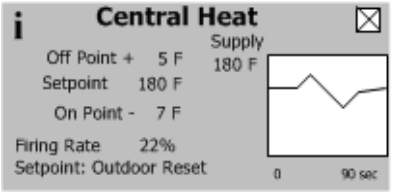

Demand Detail Display
(Central Heat shown, Typical for Auxiliary Heat, Domestic Hot Water and Sequencer Master)

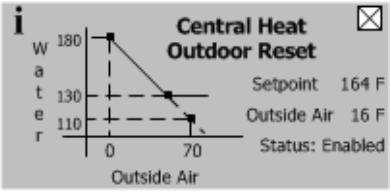

Outdoor Reset Display
(Central Heat shown, Typical for Auxiliary Heat)

5. Multiple Boiler Sequencer Screens

When the Sequence Master is enabled the following screens are available:

The Sequencer Status screen is selected by “pressing” “Status” button from the “Home” screen when Sequence Master is enabled.

Header:
measured header water temperature. This is the temperature being used to start, stop and fire boiler when there is a call-for-heat.

Setpoint:
this is the active setpoint. This temperature is the result of Outdoor Air Reset, Setback and Domestic Hot Water (DHW) selections.

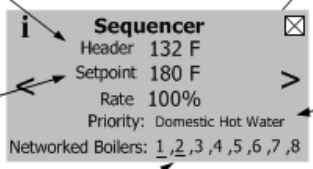

Rate:
The rate % value is equal to the Sequence Master demand to the individual boiler. Actual boiler firing rate is found on the individual boiler status pages.

Priority:
The selected Sequencer Priority is shown. Available Priorities are: Standby (no call for heat is present), Central Heat, Auxiliary Heat, Domestic Hot Water, Frost Protection or Warm Weather Shutdown.

Networked Boiler Status:
Provides connected, start sequence and firing rate status information for all connected boiler addresses. The boiler number is underlined if the boiler is running and blinks if the boiler has the start sequence in progress. For example the status for boiler address 1 is provided as follows:
1 - Boiler 1 is connected to the network
1 - “Blinking underline” - boiler 1 is starting
1 - “Solid underline” - boiler 1 is running

The “Networked Boilers” screen is selected by “pressing” the “Detail” button from the “Home” screens and “pressing” Networked Boilers” from the “Detail” screen.

Boiler Number:
Up to eight (8) boiler’s status is shown

Lead Boiler:
Upon power up the lowest numbered boiler becomes the lead boiler. The lead boiler is the first to start and last to stop. The lead boiler is automatically rotated after 24 hours of run time.
Additionally, the lead is rotated if there is a lead boiler fault.

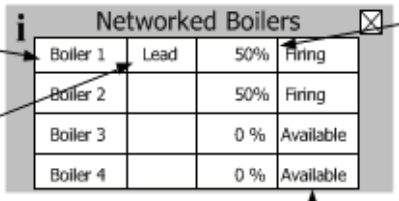

Firing Rate:
Demanded firing rate is provided.

Sequence Status:
Slave boiler status is provide as follows:

Available:	Boiler is ready and waiting to be started by the Sequencer Master.
Add Stage:	
Running:	Boiler has begun the start sequence but has not yet reached the boiler running status.
On Leave:	Boiler is running.
Recovering:	Boiler has left the network to service a DHW demand. Boiler is in the process of returning to the network. For example, the slave boiler is in the Postpurge state. **Note:** The recovery time is normally 30 seconds. However, if the slave boiler fails to start the recovery time increases from 30 seconds to 5, 10 and 15 minutes.
Disabled:	Boiler has a lockout condition and is unable to become available to the Sequencer Master.

F. Changing Adjustable Parameters

1. Entering Adjust Mode

The Control is factory programmed to include basic modulating boiler functionality. These settings are password protected to discourage unauthorized or accidental changes to settings. User login is required to view or adjust these settings:

- Press the "Adjust" button on the "Home" screen.
- Press the "Adjust" button on the Adjust Mode screen or Press "Service Contact" for service provider contact information.
- Press "Login" button to access password screen.
- Press 5-digit display to open a keypad. Enter the password (Installer Password is 86) and press the return arrow to close the keypad. Press the "Save" button.
- Press the "Adjust" button to enter Adjustment mode.

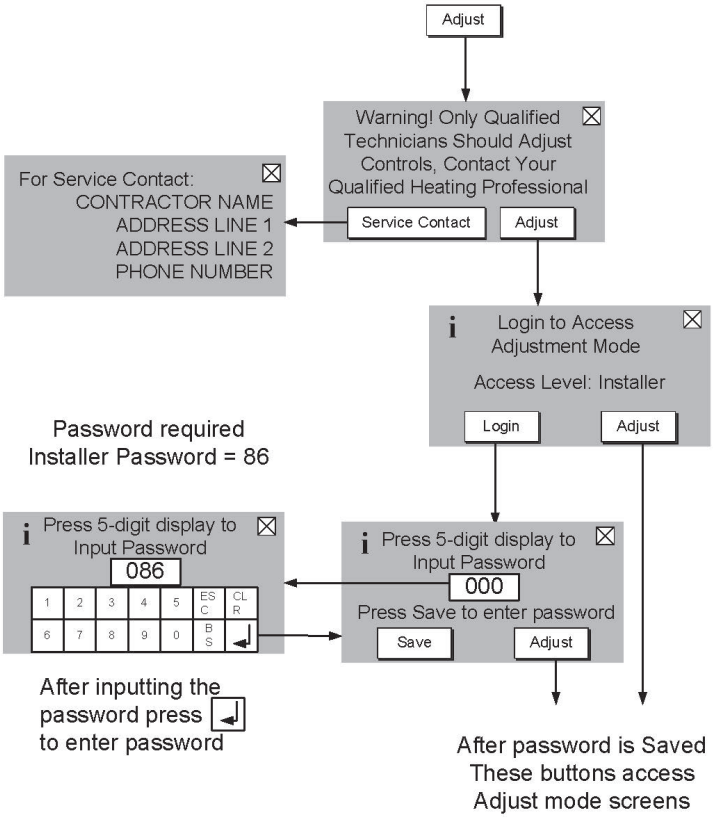

Figure 42: Adjust Mode Screens

2. Adjusting Parameters

Editing parameters is accomplished as follows:

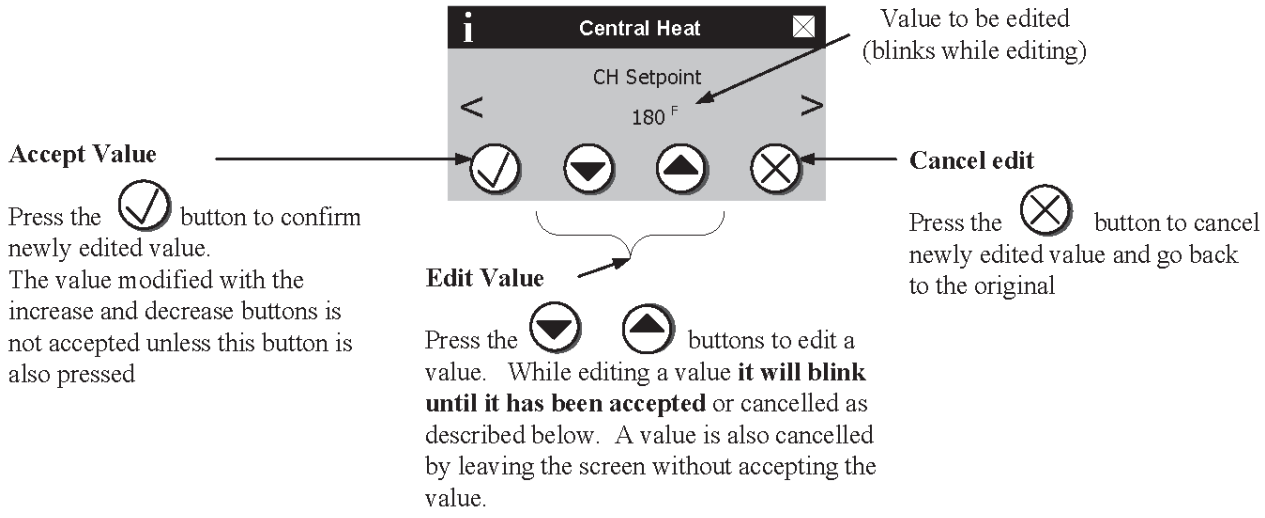

2. Adjusting Parameters (continued)

The following pages describe the Control's adjustable parameters. Parameters are presented in the order they appear on the Control's Display, from top to bottom and, left to right. From the "Home" screen select the Adjust button to access the adjustment mode screens show below (if required, refer to the previous page to review how to enter Adjustment mode):

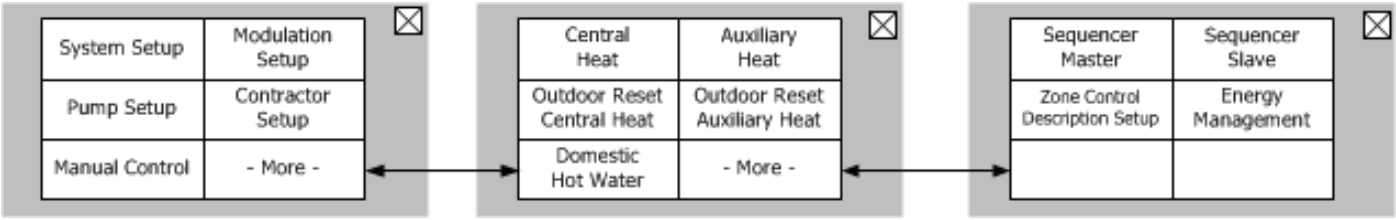

"Press" [System Setup] button to access the following parameters:

Factory Setting	Range / Choices	Parameter and Description
Fahrenheit	Fahrenheit, Celsius	**Temperature Units** The Temperature Units parameter determines whether temperature is represented in units of Fahrenheit or Celsius degrees.
4	0-14	**Display Brightness** Display brightness is adjustable from 0 to 14.
8	0-14	**Display Contrast** Display contrast is adjustable from 0 to 14.
Wired	Not Installed, Wired Wireless	**Outdoor Sensor Source** Not Installed Outdoor Sensor is not connected to the boiler, the sensor is not monitored for faults. Wired Outdoor Sensor is installed directly on the boiler terminal Strip-TB2. Wireless Outdoor sensor is installed and wireless.
0	-100 to 100 tenths of degree	**Outdoor Air Sensor Calibration** Outdoor Air Sensor Calibration offset allows a single point calibration. Using a reliable source (reference) for outdoor temperature measure outdoor air temperature. Set the offset equal to the difference between the controller reading and the reference. The result will be the Control's measurement matching the reference reading.
Not Connected	Connected, Not Connected	**Zone Control Status Connected** When the Zone Control is connected adjustable settings are automatically shown under the Adjust "Modulation", "Auxiliary Heat" and "Zone Control Description Setup" menus. This feature allows these adjustments to be made before the zone panel is connected. When the user selects "Show As If Connected" Zone Control related parameters are made visible and may be adjusted.
Enabled	Enable/Disable	**Frost Protection** Disable Frost Protection is not used. Enable Boiler and system circulators start and boiler fires when low outside air, supply and return temperatures are sensed as follows: **Device Started** / **Start Temperatures** / **Stop Temperatures** Boiler & System / Outside Air < -22°F (-30°C) / Outside Air > -18°F (-28°C)
0 Secs	0-900 Secs	**Anti-Short Cycle Time** Anti-short cycle is a tool that helps prevent excessive cy-cling resulting from a fast cycling Thermostat or Zone valves. It provides a minimum delay time before the next burner cycle. DHW demand is serviced immediately, without any delay.
Disabled	Enable/Disable	**Warm Weather Shutdown Enable** Disable Warm Weather Shutdown (WWSD) is not used. Enable The boiler and pumps will not be allowed to start in response to a central heat call for heat if the outside temperature is greater than the WWSD setpoint. WWSD is initiated as soon as outside air temperature is above WWSD Setpoint. The control does not require call for heat to be satisfied. The boiler will still start in response to a Domestic Hot Water call for heat.
70°F	0-100°F	**Warm Weather Shutdown Setpoint** The Warm Weather Shutdown (WWSD) Setpoint used to shutdown the boiler when enabled by the "WWSD Enable" parameter.

WARNING **Asphyxiation Hazard. Boiler type is factory set and must match the boiler model. Only change the boiler type setting if you are installing a new or replacement Control. The boiler type setting determines minimum and maximum blower speeds. Incorrect boiler type can cause hazardous burner conditions and improper operation that may result in PROPERTY LOSS, PHYSICAL INJURY OR DEATH.**

"Press" Modulation Setup button to access the following parameters:

Factory Setting	Range / Choices	Parameter and Description
See Table 29	See Table 29	**Boiler Type** Boiler Size Setup To verify the boiler size selection, a qualified technician should do the following: **1. Check boiler's label for actual boiler size.** **2. Set "Boiler Type" to match actual boiler size.** **3. Select "Confirm".** The Boiler Type parameter changes the minimum and maximum modulation settings. This parameter is intended to allow a user to set the parameters in a spare part Control to a particular boiler type.

Table 29: Parameters Changed Using the Boiler Type Parameter Selections:

Spare Part:	**Sage2.X Repair Control Kit - P/N 106191-01 Maximum Light-off Heat Rate = 3000**									**Sage2.X Repair Control Kit P/N 106191-02 Maximum Light-off Heat Rate = 3000**		**Sage2.X Repair Control Kit P/N 106191-03 Maximum Light-off Heat Rate = 2500 rpm**
Altitude	**0 - 7000 Ft.**									**7001 - 10,000 Ft.**		
Boiler Type	080 **-02**	080 **-27**	105 **-02**	105 **-27**	150 **-02**	150 **-27**	210 **-02**	210 **-27**	285 **-07**	150 **-70**	210 **-70**	285 **-70**
Minimum Heat Rate	1120	1700	1250	1800	1300	2000	1370	2400	1450	2000	1800	2400
Maximum Heat Rate	4480	4480	4450	4450	5000	5000	5950	5950	5560	6200	7000	7000
Absolute Maximum Heat Rate	5000	5000	4850	4850	5500	5500	6350	6350	6200	6200	7000	7000
Light-off Heat Rate	4000									3000	3000	2500

NOTE: Maximum Modulation Rates are designed for 100% nameplate rate at 0°F (-18°C) combustion air. Contact factory before attempting to increase the Maximum Modulation Rate.

Expected Heat Rate Adjustment Screens (HeatMatch Software)

The Control is shipped with defaults that will provide improved operation. Adjustment is only required to optimize setup.

The expected heat rate adjustment is used to better match boiler output to the home heating needs. After receiving a "call for heat" the Control first uses the expected heat rate value to set a maximum heat rate. The maximum heat rate is the highest heat rate that the boiler can fire to at that moment. The maximum heat rate is the summation of the expected heat rates for the active (turned on) zones. After establishing the maximum heat rate the Control then measures water temperature and fires the boiler only as hard as required for the heat demand.

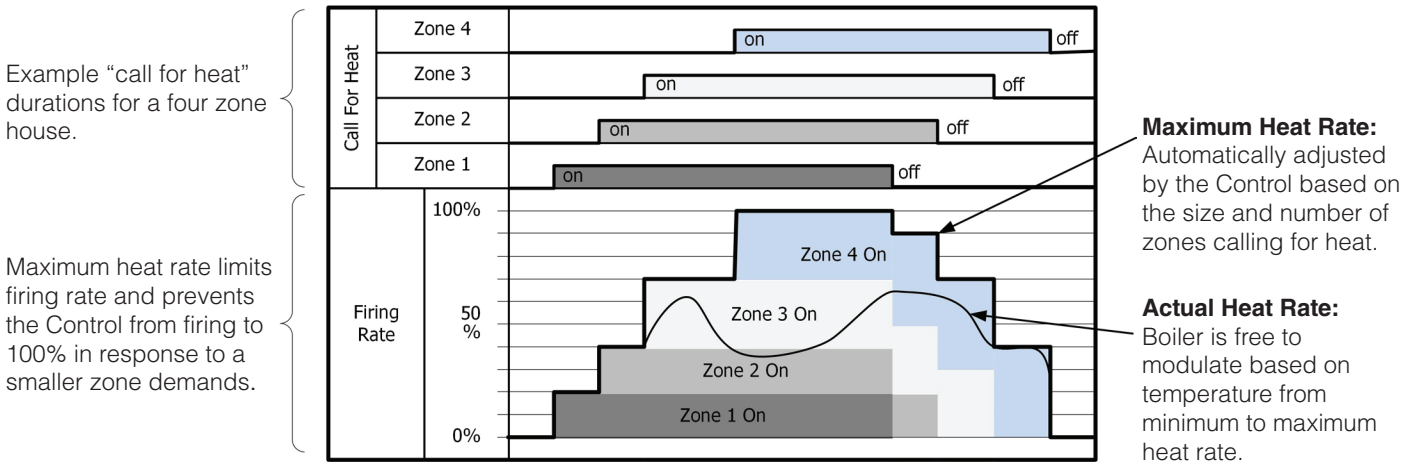

Figure 43: Four Zone House (with Zone Control Connected)

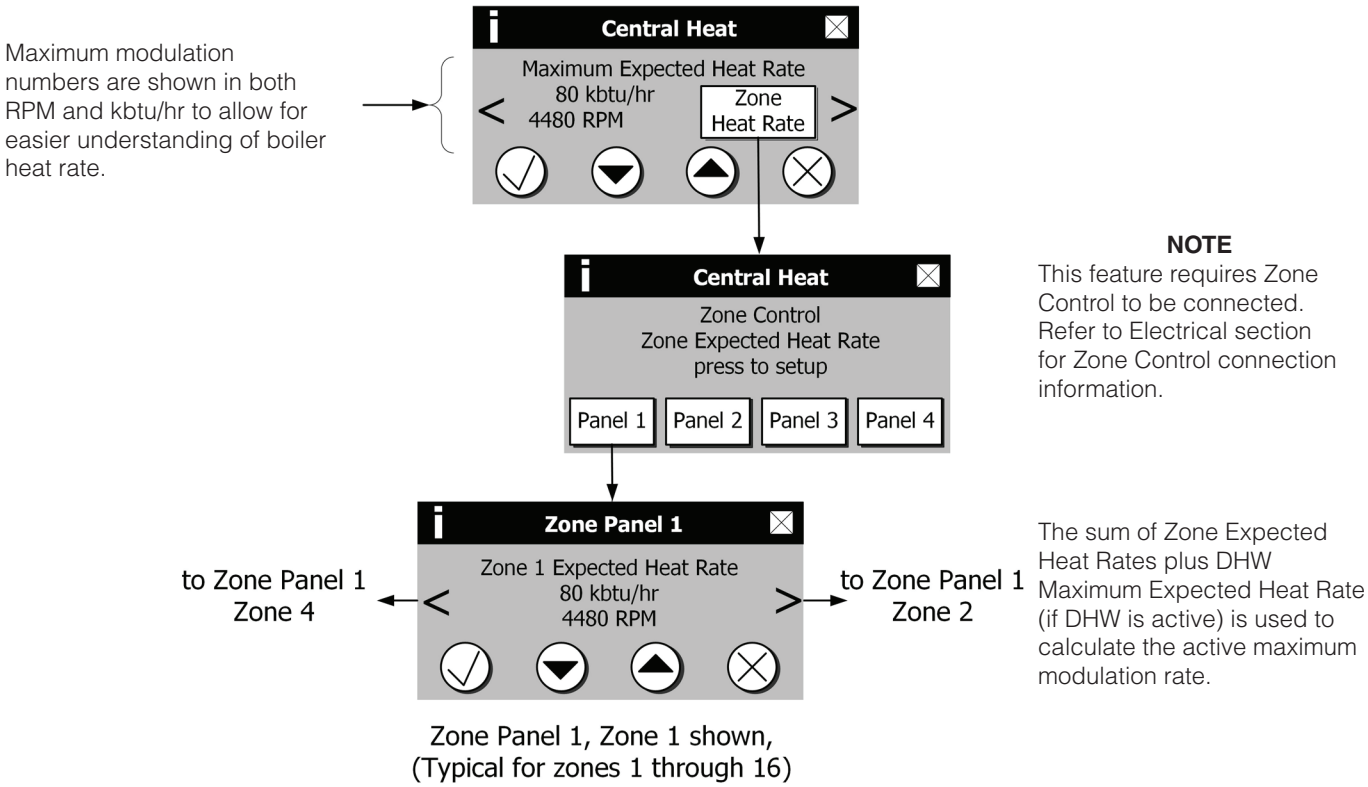

Figure 44: Expected Heat Rate Adjustment (with Zone Control Connected)

"Press" [Modulation Setup] button to access the following parameters:

Factory Setting	Range / Choices	Parameter and Description
100%	Minimum to Maximum Heat Rate	**Central Heat Maximum Expected Heat Rate** This parameter defines the highest modulation rate the Control will go to during a central heat call for heat. If the rated input of the installed home radiation is less than the maximum output of the boiler, change the Central Heat Maximum Expected Heat Rate (fan speed) setting to limit the boiler output accordingly.
80%	Minimum to Maximum Heat Rate	**Domestic Hot Water (DHW) Maximum Expected Heat Rate** This parameter defines the highest modulation rate the Control will go to during a Domestic Hot Water call for heat. If the rated input of the indirect water heater is less than the maximum output of the boiler, change the DHW Maximum Expected Heat Rate (fan speed) setting to limit the boiler output accordingly.
100%	Minimum to Maximum Heat Rate	**Auxiliary Maximum Expected Heat Rate** This parameter defines the highest modulation rate the Control will go to during the auxiliary heat call for heat. If the rated input of the Auxiliary Heat Zones is less than the maximum output of the boiler, change the Auxiliary Heat Maximum Expected Heat Rate (fan speed) setting to limit the boiler output accordingly.
40%	Minimum to Maximum Heat Rate	**Zone 1 Expected Heat Rate (typical for zone 1 through 16)** This parameter defines the highest modulation rate the Control will go to during the Zone 1 call for heat. If the rated input of the installed home radiation in zone 1 is less than the maximum output of the boiler, change the Zone 1 Expected Heat Rate (fan speed) setting to limit the boiler output accordingly.
30 Minutes	0 to 60 Minutes	**Zone Release Time** After the Zone Release Time minutes and a zone has not been satisfied (thermostat opens) the measured heat loss will be released to increase to the Central Heat Maximum Heat Rate.
See Table 29	Minimum - 100 to Maximum	**Minimum Heat Rate** This parameter is the lowest modulation rate the Control will go to during any call for heat.
See Table 29	See Table 29	**Lightoff Heat Rate** This is the blower speed during ignition and flame stabilization periods.

"Press" Pump Setup button to access the following parameters:

Factory Setting	Range / Choices	Parameter and Description
Any Demand	Never, Any Demand, Central Heat, No Priority, Central Heat, Optional Priority	**System Pump run pump for:** Activates the system pump output according to selected function. Never: Pump is disabled and not shown on status screen. Any Demand: Pump Runs during any call for heat. Central Heat, No Priority: Pump Runs during central heat and frost protection call for heat. Pump does not start for a DHW call for heat and continues to run during Domestic Hot Water Priority. Central heat, Optional Priority: Pump Runs during central heat and frost protection call for heat. Pump does not start for a DHW call for heat and will be forced off if there is a DHW call for heat and Domestic Hot Water Priority is active.
Any Demand	Any Demand, Central Heat, off DHW demand	**Boiler Pump run pump for:** Activates the boiler pump output according to selected function. Any Demand: Pump Runs during any call for heat. Central Heat, off DHW demand: Make sure indirect water heater and DHW circulator are sized to maintain flow through boiler within limits shown in Table 12. Pump Runs during central heat and frost protection call for heat. Pump does not start for a DHW call for heat and will be forced off if there is a DHW call for heat and Domestic Hot Water Priority is active.
Primary Loop Pipe IWH	Never, Primary Loop Piped IWH, Boiler Piped IWH	**Domestic Pump run pump for:** Activates the Domestic pump output according to selected function. Never: Pump is disabled and not shown on status screen. Primary Loop Piped IWH: Pump Runs during domestic hot water call for heat. Domestic Hot Water Priority enable/disable does not affect pump operation. Boiler Piped IWH: Make sure indirect water heater and DHW circulator are sized to maintain flow through boiler within limits shown in Table 12. Pump Runs during domestic hot water call for heat. Pump is forced off during a central heat call for heat when Domestic Hot Water Priority "disabled" is selected and when Domestic Hot Water Priority "enable" has been selected and the DHW call for heat has remained on for longer than 1 hour (priority protection time).

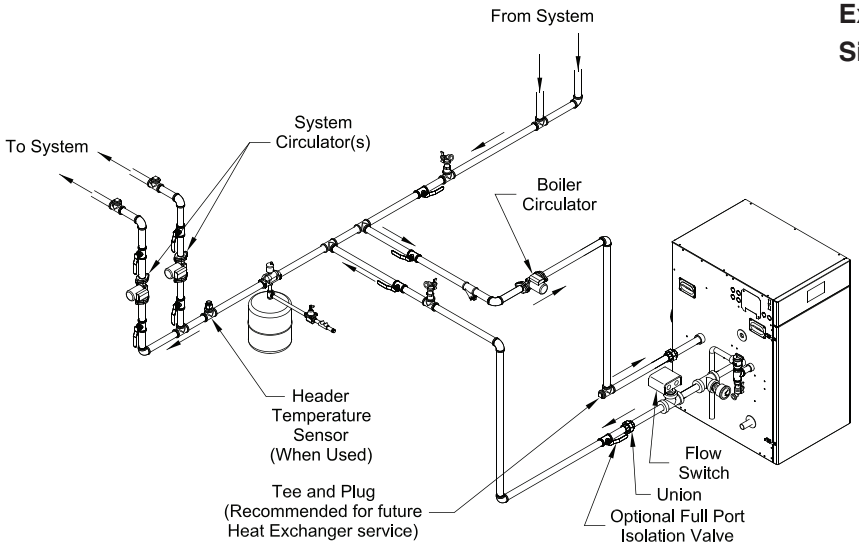

Example Pump Parameter selections:

Single boiler with no Indirect Water Heater

Parameter Selections:

System Pump= "any demand"
Boiler Pump = "any demand"
DHW Pump = "never"

Explanation:

This piping arrangement only services central heat. When there is any demand both boiler and system pumps turn on.

Example Pump Parameter selections (continued):

Single boiler Indirect Water Heater (IWH)Piped to Primary, Optional Domestic Hot Water Priority.

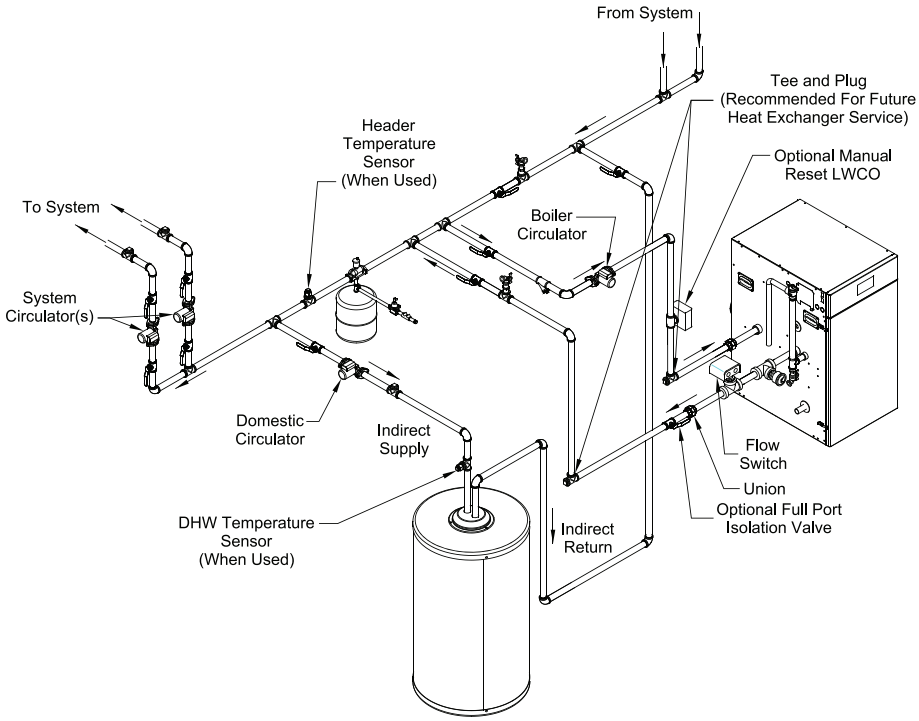

Parameter Selections:

System Pump= "Central Heat , Optional Priority"

Boiler Pump = "any demand"

DHW Pump = "Primary Loop Piped IWH"

DHW Priority Enable is optional

Explanation:

This piping arrangement permits the system pump to run or not run when there is a domestic hot water call for heat. Domestic hot water priority is optional. It is permissible for the domestic and system pumps to run at the same time. The boiler pump must run for every call for heat.

Multiple Boilers with Boiler Piped IWH, System and DHW Wired to Master

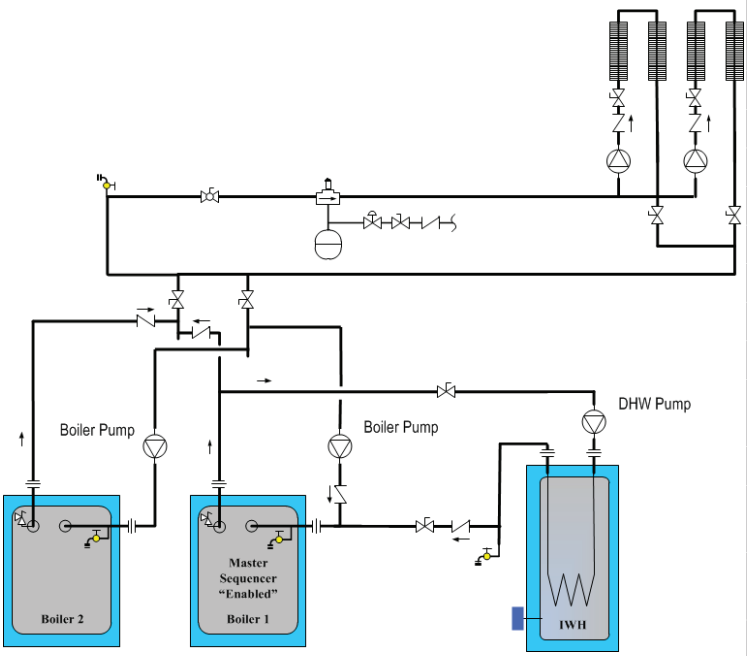

	Sequencer Master (Boiler 1)	Boiler 2
Wiring locations:		
Thermostat	X	
DHW call for heat	X	
System pump	X	
DHW pump	X	
Boiler Pump	X	X
Sequencer Master Parameter Selections:		
Sequencer Master	Enabled	
Indirect Water Heater	"Boiler Piped"	
Pump Parameter Selections:		
System Pump =	Central Heat, No Priority	Never
Boiler Pump =	Central Heat, Off DHW Priority	Any demand
DHW Pump =	Boiler Piped IWH	Never

Explanation:

Make sure indirect water heater and DHW pump are sized to maintain flow though boiler within limits shown in Table 12. This piping arrangement does not allow both the Slave 1's boiler and domestic hot water pump to run at the same time. When call for Domestic Hot Water is received the DHW pump is turned on and the boiler pump is turned off. However, the system pumps may run to satisfy a central heat demand that is being satisfied by a different slave. The central heat demand is ignored by Slave 1 until the domestic hot water demand is ended. If domestic hot water priority is enabled and priority protection time is exceeded the domestic hot water pump turns off to allow the boiler pump to run.

Example Pump Parameter selections (continued):

Multiple boilers IWH Piped to Primary, Optional Domestic Hot Water Priority

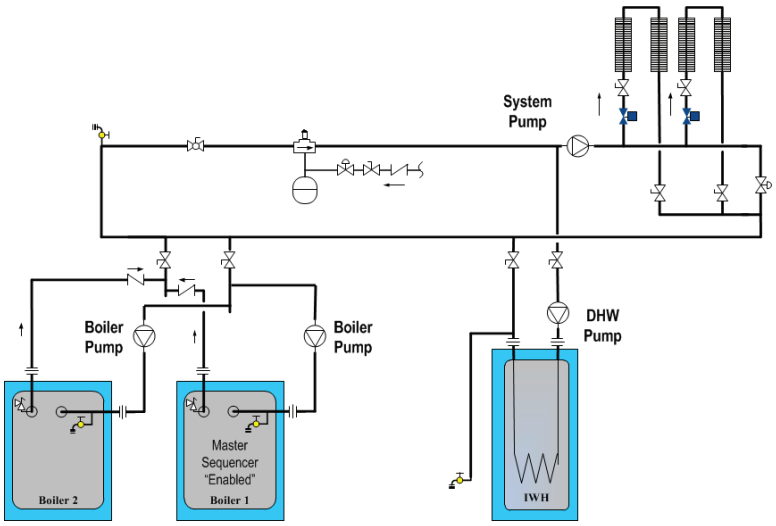

	Sequencer Master (Boiler 1)	Boiler 2
Wiring locations:		
Thermostat	X	
DHW call for heat	X	
System pump	X	
DHW pump	X	
Boiler Pump	X	X
Sequencer Master Parameter Selections:		
Sequencer Master	Enabled	
Indirect Water Heater	"Primary Piped"	
Pump Parameter Selections:		
System Pump =	Central Heat, Optional Priority	Never
Boiler Pump =	Any demand	Any demand
DHW Pump =	Primary Loop Piped IWH	Never

Explanation:
This piping arrangement permits the system pump to run or not run when there is a domestic hot water call for heat. Domestic hot water priority is optional. It is permissible for the domestic and system pumps to run at the same time. The boiler pump must run for every call for heat.

Multiple Boilers, IWH piped to primary, system pump required to run for any call for heat

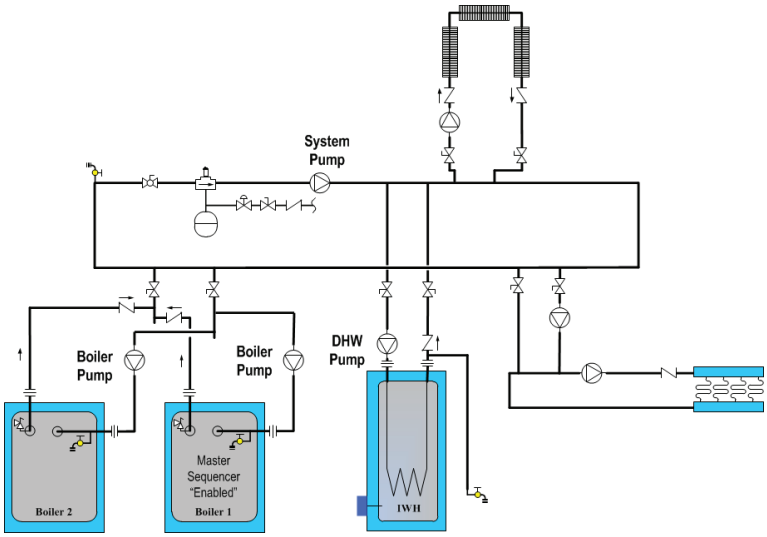

	Sequencer Master (Boiler 1)	Boiler 2
Wiring locations:		
Thermostat	X	
DHW call for heat	X	
System pump	X	
DHW pump	X	
Boiler Pump	X	X
Sequencer Master Parameter Selections:		
Sequencer Master	Enabled	
Indirect Water Heater	"Primary Piped"	
Pump Parameter Selections:		
System Pump =	Any demand	Never
Boiler Pump =	Any demand	Any demand
DHW Pump =	Primary Loop Piped IWH	Never

Explanation:
This piping arrangement requires the system pump to be running for any calls for heat. Also the boiler pump must run for any call for heat.

"Press" [Contractor Setup] button to access the following parameters:

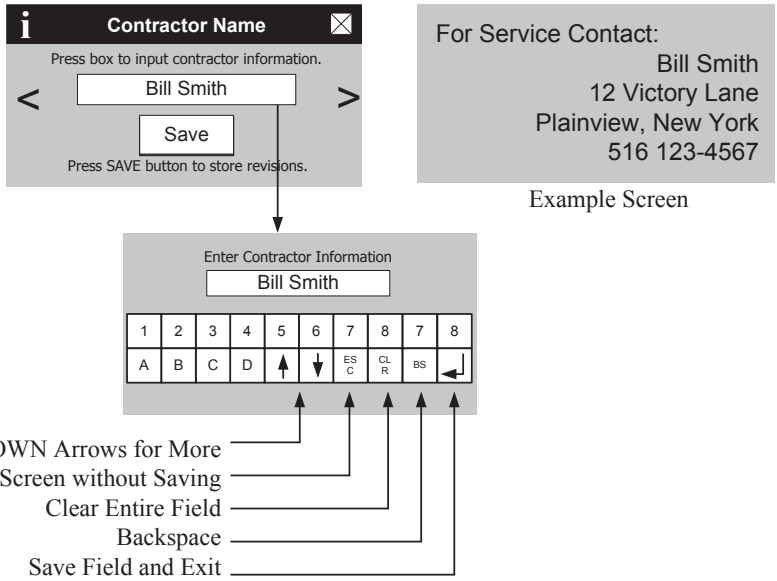

Factory Setting	Range / Choices	Parameter and Description
Contractor Name	User defined	Contractor Name
Address Line 1	User defined	Contractor Address Line 1
Address Line 2	User defined	Contractor Address Line 2
Phone	User defined	Contractor Phone

"Press" [Manual Control] button to access the following screen:

The Manual Speed Control speed screen allows the technician to set firing rate at low or high speed for combustion testing.

NOTE
Rate % can only be set when the boiler has heat demand and is released to modulate.

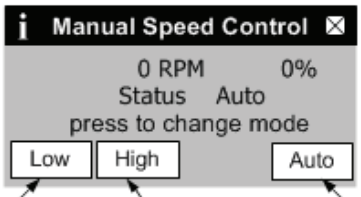

NOTE
Selecting "Low" or "High" locks (manual mode) firing rate at min or max Rate %. After combustion testing select "Auto" to return the boiler to normal operation.

"Press" "Low" to select manual firing rate control and Minimum firing rate %

"Press" "High" to select manual firing rate control and Central Heat Maximum firing rate %

Press "Auto" to return firing rate to Automatic Mode

"Press" [Central Heat] button to access the following parameters:

Factory Setting	Range / Choices	Parameter and Description
180°F (82.2°C)	60°F to 190°F (16°C to 87.8°C)	**Central Heat Setpoint** Target temperature for the central heat priority. Value also used by the outdoor air reset function.
170°F (76.7°C)	80°F to 190°F (26.7°C to 87.8°C)	**Central Heat Thermostat "Sleep" or "Away" Setback Setpoint** Thermostat setback setpoint is used when the EnviraCOM thermostat is in "leave" or "sleep" modes and sensed at E-COM terminals D, R, and C. When setback is "on" the thermostat setback setpoint shifts the reset curve to save energy while home is in a reduced room temperature mode. The reset curve is shifted by the difference between the High Boiler Water Temperature and the Thermostat Setback Setpoint. Honeywell VisionPro IAQ part number TH9421C1004 is a "setback" EnviraCOM enabled thermostat. When connected, it allows boiler water setback cost savings.
7°F (3.9°C)	2°F to 10°F (1.1°C to 5.6°C)	**Central Heat Diff Above** The boiler stops when the water temperature rises 'Diff Above' degrees above the setpoint.
5°F (2.8°C)	2°F to 25°F (1.1°C to 14°C)	**Central Heat Diff Below** The boiler starts when the water temperature drops 'Diff Below' degrees below the setpoint.
3	1 to 5	**Response Speed** This parameter adjusts the Central Heat temperature controller Proportion Integral Derivative (PID) values. Higher values cause a larger firing rate change for each degree of temperature change. If set too high firing rate "overshoots" required value, increases to high fire causing the temperature to exceed the "Diff Above" setpoint and cycle the boiler unnecessarily. Lower values cause a smaller firing rate change for each degree of temperature change. If set too low, the firing rate response will be sluggish and temperature will wander away from setpoint.
120 seconds	0 to 300 seconds	**Low Fire Hold Time** "Low Fire Hold Time" is the number of seconds the control will wait at low fire modulation rate before being released to modulate. After ignition and flame stabilization periods the firing rate is held at low fire for "Low Fire Hold Time". This delay allows heat to travel out to the system and provide system feedback prior to the control modulating firing rate.
Supply Sensor	Supply Sensor, Header Sensor	**Modulation Sensor** Heat Demand may respond to the boiler's Supply Temperature or Header Temperature sensors. When Header Sensor is selected the boiler is fired in response to the sensor wired to Header Sensor Low Voltage Terminal Block Terminals.

"Press" [Auxiliary Heat] button to access the following parameters:

Factory Setting	Range / Choices	Parameter and Description
180°F (82.2°C)	60°F to 190°F (16°C to 87.8°C)	**Auxiliary Heat Setpoint** Target temperature for the Auxiliary Heat priority. Value also used by the outdoor air reset function.
170°F (76.7°C)	80°F to 190°F (26.7°C to 87.8°C)	**Auxiliary Heat Thermostat "Sleep" or "Away" Setback Setpoint** Thermostat setback setpoint is used when the EnviraCOM thermostat is in "leave" or "sleep" modes and sensed at E-COM terminals D, R, and C. When setback is "on" the thermostat setback setpoint shifts the reset curve to save energy while home is in a reduced room temperature mode. The reset curve is shifted by the difference between the High Boiler Water Temperature and the Thermostat Setback Setpoint. Honeywell VisionPro IAQ part number TH9421C1004 is a "setback" EnviraCOM enabled thermostat. When connected, it allows boiler water setback cost savings.
7°F (3.9°C)	2°F to 10°F (1.1°C to 5.6°C)	**Auxiliary Heat Diff Above** The boiler stops when the water temperature rises 'Diff Above' degrees above the setpoint.
5°F (2.8°C)	2°F to 25°F (1.1°C to 14°C)	**Auxiliary Heat Diff Below** The boiler starts when the water temperature drops 'Diff Below' degrees below the setpoint.
3	1 to 5	**Response Speed** This parameter adjusts the Auxiliary Heat temperature controller Proportion Integral Derivative (PID) values. Higher values cause a larger firing rate change for each degree of temperature change. If set too high firing rate "overshoots" required value, increases to high fire causing the temperature to exceed the "Diff Above" setpoint and cycle the boiler unnecessarily. Lower values cause a smaller firing rate change for each degree of temperature change. If set too low, the firing rate response will be sluggish and temperature will wander away from setpoint.
Disable	Disable, Enable	**Auxiliary Priority Over Central Heat** This parameter allows the Auxiliary Heat demand to be higher or lower priority than Central Heat demand. When both demands are active at the same time the Control uses the Setpoint, Diff Above and Diff Below for the demand that has priority. Disabled — Auxiliary Heat is lower priority than Central Heat demand. Enable — Auxiliary Heat is higher priority than Central Heat demand.
Zone Control	Zone Control, DHW Terminal	**Auxiliary Heat Demand Source** The Control's "DHW Temp Switch" input terminal may be used as a Domestic Hot Water (DHW) demand or Auxiliary Heat demand. When the Domestic Hot Water Demand Source is set to Zone Control and the Auxiliary Heat Demand Source is set to "DHW Terminal" an Auxiliary Heat Demand may be wired to the DHW Temp Switch terminals. This feature may be used even if a Zone Control is not installed. Zone Control — Auxiliary Heat demand may only be wired to the Zone Control DHW Terminal — Auxiliary Heat demand may be wired to the Zone Control or DHW Terminal.
Supply Sensor	Supply Sensor, Header Sensor	**Modulation Sensor** Heat Demand may respond to the boiler's Supply Temperature or Header Temperature sensors. When Header Sensor is selected the boiler is fired in response to the sensor wired to Header Sensor Low Voltage Terminal Block Terminals.

"Press" Domestic Hot Water button to access the following parameters:

Factory Setting	Range / Choices	Parameter and Description
170°F (76.7°C)	60°F (16°C) to 190°F (26.7°C to 87.8°C)	**Domestic Hot Water Setpoint** The Domestic Hot Water (DHW) Setpoint parameter is used to create a minimum boiler water temperature setpoint that is used when DHW heat demand is "on". When the DHW heat demand is not "on" (the contact is open or not wired) this setpoint is ignored.
160°F (71.1°C)	60°F (16°C) to 190°F (26.7°C to 87.8°C)	**Domestic Hot Water Thermostat "Sleep" or "Away" Setback Setpoint** Thermostat setback setpoint is used when the EnviraCOM thermostat is in "leave" or "sleep" modes and sensed at E-COM terminals D, R, and C. When setback is "on" the thermostat setback setpoint shifts the DHW setpoint to lower the DHW temperature and to save energy while home is in a reduced room temperature mode.
7°F (3.9°C)	2°F to 10°F (1.1°C to 5.6°C)	**Domestic Hot Water Diff Above** The boiler stops when the water temperature rises 'Diff Above' degrees above the setpoint.
5°F (2.8°C)	2°F to 25°F (1.1°C to 14°C)	**Domestic Hot Water Diff Below** The boiler starts when the water temperature drops 'Diff Below' degrees below the setpoint.
3	1 to 5	**Response Speed** This parameter adjusts the Domestic Hot Water temperature controller Proportion Integral Derivative (PID) values. Higher values cause a larger firing rate change for each degree of temperature change. If set too high firing rate "overshoots" required value, increases to high fire causing the temperature to exceed the "Diff Above" setpoint and cycle the boiler unnecessarily. Lower values cause a smaller firing rate change for each degree of temperature change. If set too low, the firing rate response will be sluggish and temperature will wander away from setpoint.
10 seconds	0 to 300 seconds	**Low Fire Hold Time** "Low Fire Hold Time" is the number of seconds the control will wait at low fire modulation rate before being released to modulate. After ignition and flame stabilization periods the firing rate is held at low fire for "Low Fire Hold Time". This delay allows heat to travel out to the indirect water heater and provide feedback prior to the control modulating firing rate.
Enabled	Enable, Disable	**Domestic Hot Water Priority (DHWP)** When Domestic Hot Water Priority is Enabled and Domestic Hot Water (DHW) heat demand is "on" the DHW demand will take "Priority" over home heating demand. When the System and Boiler pumps are configured as "Central Heat (off DHW priority)" or "Central Heat, Optional Priority" then they will be forced "off" during DHW Priority. Priority protection time is provided to end DHWP in the event of a failed or excessive long DHW demand.
60	30 to 120 Minutes	**Priority Time** When DHWP is Enabled the Priority Time Parameter appears and is adjustable.
DHW Terminal	DHW Terminal, Zone Control	**Domestic Demand Source** The Control's "DHW Temp Switch" input terminal may be used as a DHW demand or Auxiliary Heat demand. When "DHW Terminal" is selected the Control will accept a DHW input from either the "DHW Temp Switch" or the Zone Control (zone 4, set to priority). If "Zone Control" is selected the Control can only accept the DHW input from the Zone Control. This allows the Control to be set to accept an Auxiliary heat demand from the "DHW Temp Switch" input terminal. Refer to the Auxiliary heat menu for required selection to use this input. DHW Terminal — DHW demand may be wired to the DHW Switch terminal or Zone Control. Zone Control — DHW demand may only be wired to the Zone Control.

"Press" [Outdoor Reset Central Heat] button to access the following parameters:

Factory Setting	Range / Choices	Parameter and Description
Enabled	Enable Disable	**Central Heat Outdoor Reset Enable** If an outdoor sensor is installed and Outdoor Reset is Enabled, the boiler will automatically adjust the heating zone set point temperature based on the outdoor reset curve in Figure 45. The maximum set point is defined by the Central Heat Setpoint [factory set to 180°F (82.2°C)] when the outdoor temperature is 0°F (-18°C) or below. The minimum set point temperature shown is 130°F (54.4°C) [adjustable as low as 80°F (26.7°C)] when the outdoor temperature is 50°F (10°C) or above. As the outdoor temperature falls the supply water target temperature increases. For example, if the outdoor air temperature is 30°F, (-1.1°C) the set point temperature for the supply water is 150°F (65.6°C). Disable — Do Not Calculate setpoint based on outdoor temperature Enable — Calculate the temperature setpoint based on outdoor temperature using a reset curve defined by Low Outdoor Temp, High Outdoor Temp, Low Boiler Water Temp, Min Boiler Temp and Central Heat Setpoint and Boost Time parameters.
0°F (-18°C)	-40°F to 100°F (-40°C to 37.8°C)	**Central Heat Low Outdoor Temperature** The Low Outdoor Temperature parameter is also called "Outdoor Design Temperature". This parameter is the outdoor temperature used in the heat loss calculation. It is typically set to the coldest outdoor temperature.
70°F (21.1°C)	32°F to 100°F (0°C to 37.8°C)	**Central Heat High Outdoor Temperature** The High Outdoor Temperature parameter is the outdoor temperature at which the Low Boiler Water Temperature is supplied. This parameter is typically set to the desired building temperature.
110°F (43.3°C)	70°F to 190°F (21.1°C to 87.8°C)	**Central Heat Low Boiler Water Temperature** The Low Boiler Water Temperature parameter is the operating setpoint when the High Outdoor Temperature is measured. If the home feels cool during warm outdoor conditions, the Low Boiler Water Temperature parameter should be increased.
130°F (54.4°C)	80°F to 190°F (26.7°C to 87.8°C)	**Minimum Boiler Temperature (Central Heat and Auxiliary Heat)** The Minimum Boiler Temperature parameter sets a low limit for the Reset setpoint. Set this parameter to the lowest supply water temperature that will provide enough heat for the type radiation used to function properly. Always consider the type of radiation when adjusting this parameter.
0 Minutes	0-1800 Seconds (0-30 Minutes)	**Central Heat Boost Time** When the Central Heat Setpoint is decreased by Outdoor Reset settings, the Boost Time parameter is used to increase the operating setpoint when the home heat demand is not satisfied after the Boost Time setting is exceeded. When heat demand has been "on" continuously for longer than the Boost Time parameter the operating setpoint is increased by 10°F (5.6°C). The highest operating setpoint from Boost Time is current Central Heat Setpoint minus the Central Heat "Diff Above" setting. A setting of 0 seconds disables this feature.

"Press" Outdoor Reset Auxiliary Heat button to access the following parameters:

Factory Setting	Range / Choices	Parameter and Description
Enabled	Enable Disable	**Auxiliary Heat Outdoor Reset Enable** If an outdoor sensor is installed and Outdoor Reset is Enabled, the boiler will automatically adjust the heating zone set point temperature based on the outdoor reset curve in Figure 45. The maximum set point is defined by the Central Heat Setpoint [factory set to 180°F (82.2°C)] when the outdoor temperature is 0°F (-18°C) or below. The minimum set point temperature shown is 130°F (54.4°C) [adjustable as low as 80°F (26.7°C)] when the outdoor temperature is 50°F (10°C) or above. As the outdoor temperature falls the supply water target temperature increases. For example, if the outdoor air temperature is 30°F, (-1.1°C) the set point temperature for the supply water is 150°F (65.6°C). Disable Do Not Calculate setpoint based on outdoor temperature Enable Calculate the temperature setpoint based on outdoor temperature using a reset curve defined by Low Outdoor Temp, High Outdoor Temp, Low Boiler Water Temp, Min Boiler Temp and Central Heat Setpoint and Boost Time parameters.
0°F (-18°C)	-40°F to 100°F (-40°C to 37.8°C)	**Auxiliary Heat Low Outdoor Temperature** The Low Outdoor Temperature parameter is also called "Outdoor Design Temperature". This parameter is the outdoor temperature used in the heat loss calculation. It is typically set to the coldest outdoor temperature.
70°F (21.1°C)	32°F to 100°F (0°C to 37.8°C)	**Auxiliary Heat High Outdoor Temperature** The High Outdoor Temperature parameter is the outdoor temperature at which the Low Boiler Water Temperature is supplied. This parameter is typically set to the desired building temperature.
110°F (43.3°C)	70°F to 190°F (21.1°C to 87.8°C)	**Auxiliary Heat Low Boiler Water Temperature** The Low Boiler Water Temperature parameter is the operating setpoint when the High Outdoor Temperature is measured. If the home feels cool during warm outdoor conditions, the Low Boiler Water Temperature parameter should be increased.
0 Minutes	0-1800 Seconds (0-30 Minutes)	**Auxiliary Heat Boost Time** When the Central Heat Setpoint is decreased by Outdoor Reset settings, the Boost Time parameter is used to increase the operating setpoint when the home heat demand is not satisfied after the Boost Time setting is exceeded. When heat demand has been "on" continuously for longer than the Boost Time parameter the operating setpoint is increased by 10°F (5.6°C). The highest operating setpoint from Boost Time is current Central Heat Setpoint minus the Central Heat "Diff Above" setting. A setting of 0 seconds disables this feature.

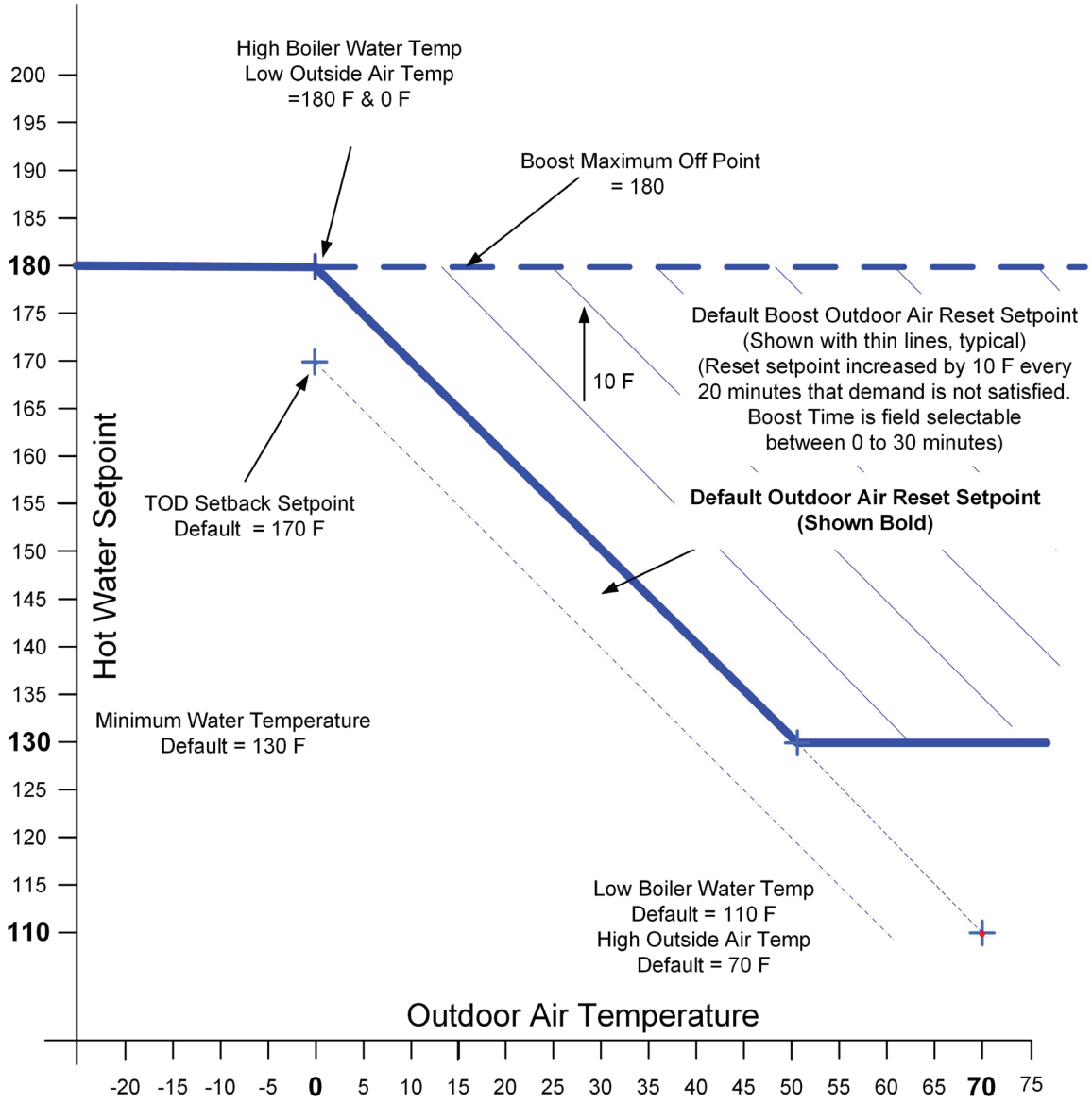

Figure 45: Outdoor Reset Curve - Typical for Central Heat and Auxiliary Heat

Central Heat Setpoint	Heating Element Type		Central Heat Setpoint	Heating Element Type	
180°F to 190°F (82.2°C to 87.8°C)	Fan Coil	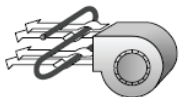	100°F to 140°F (37.8°C to 60°C)	In Slab Radiant High Mass Radiant	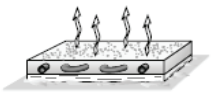
160°F to 190°F (71.1°C to 87.8°C)	Convection Baseboard Fin Tube Convective	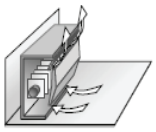	130°F to 160°F (54.4°C to 71.1°C)	Staple-up Radiant Low Mass Radiant	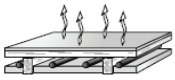
130°F to 160°F (54.4°C to 71.1°C)	Radiant Baseboard		140°F to 160°F (60°C to 71.1°C)	Radiators	

"Press" [Sequence Master] button to access the following parameters:

Factory Setting	Range / Choices	Parameter and Description
Disable	Enable, Disable	**Master Enable/Disable** The Sequencer Master Enable/Disable is used to "turn on" the Multiple Boiler Controller. Warning! enable ONLY one Sequence Master.
Boiler Piped	Boiler Piped, Primary Piped	**Indirect Water Heater (IWH)** Boiler Piped Sequencer to respond to an Isolated DHW demand that is piped to a single boiler. The individual boiler goes on "Leave" from the Sequencer Master and goes to DHW Service. Primary Piped The Sequence Master responds to the DHW Call For Heat. This allows one or more boilers to provide heat to the IWH.
Disabled	Enable, Disable	**DHW Two Boiler Start** The Sequencer to immediately start two boilers for a DHW call for heat. Used when DHW is the largest demand. Only visible when primary piped IWH is selected.
180 Secs	120 - 1200 Secs	**Boiler Start Delay** Slave boiler time delay after header temperature has dropped below the setpoint minus "Diff below" setpoint. Longer time delay will prevent nuisance starts due to short temperature swings.
195°F (90.6°C)	Central Heat Setpoint, 195°F (90.6°C)	Stop All Boilers Setpoint When this temperature is reached all boilers are stopped. This setpoint allows the Sequencer to respond to rapid load increases.
70%	50% - 100%	**Base Load Common Rate** To maximize condensing boiler efficiency, the firing rate is limited to an adjustable value. Boilers are kept at or below this firing rate as long as the boilers can handle the load. After last available boiler has started, the modulation rate limit is released up to 100%.
3	1-5	**Response Speed** This parameter adjusts the Sequence Master temperature controller Proportion Integral Derivative (PID) values. Higher values cause a larger firing rate change for each degree of temperature change. If set too high firing rate "overshoots" required value, increases to high fire causing the temperature to exceed the "Diff Above" setpoint and cycle the boiler unnecessarily. Lower values cause a smaller firing rate change for each degree of temperature change. If set too low, the firing rate response will be sluggish and temperature will wander away from setpoint.

"Press" [Sequence Slave] button to access the following parameters:

Factory Setting	Range / Choices	Parameter and Description
None	1-8	Boiler Address Each boiler must be given a unique address. When "Normal" slave selection order is used, the boiler address is used by the Master Sequencer as the boiler start order. The boiler address is also the Modbus Address when a Energy Management System is connected.
Normal	Use Boiler First, Normal, Use Boiler Last	Slave Selection Order "Use Boiler First"; places the Slave in the lead permanently. "Normal"; firing order follows boiler number (1,2,3,..) order. "Use Boiler Last"; places the slave last in the firing order.

"Press" [Zone Control Description Setup] button to access the following parameters:

NOTE
Zone Control Description Setup shown for 2 panels, typical for up to 4.

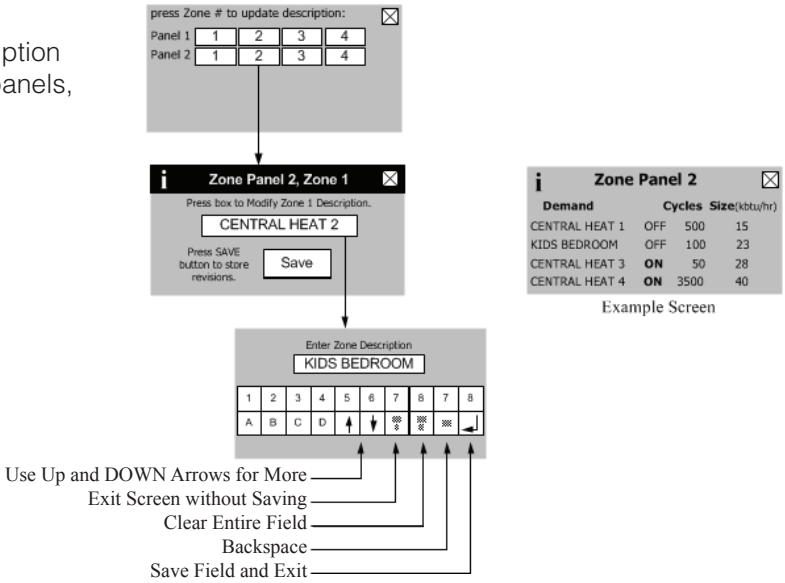

Factory Setting	Range / Choices	Parameter and Description	
Central Heat 1	User defined	Zone Control 1	Zone 1
Central Heat 2	User defined	Zone Control 1	Zone 2
Central Heat 3	User defined	Zone Control 1	Zone 3
Central Heat 4	User defined	Zone Control 1	Zone 4
Central Heat 1	User defined	Zone Control 2	Zone 1
Central Heat 2	User defined	Zone Control 2	Zone 2
Central Heat 3	User defined	Zone Control 2	Zone 3
Central Heat 4	User defined	Zone Control 2	Zone 4
Central Heat 1	User defined	Zone Control 3	Zone 1
Central Heat 2	User defined	Zone Control 3	Zone 2
Central Heat 3	User defined	Zone Control 3	Zone 3
Central Heat 4	User defined	Zone Control 3	Zone 4
Central Heat 1	User defined	Zone Control 4	Zone 1
Central Heat 2	User defined	Zone Control 4	Zone 2
Central Heat 3	User defined	Zone Control 4	Zone 3
Central Heat 4	User defined	Zone Control 4	Zone 4

"Press" Energy Management button to access the following parameters:

Factory Setting	Range / Choices	Parameter and Description
Local	Local, 4-20mA	**Central Heat Modulation Source** This parameter enables the 4-20mA input to control firing rate and the thermostat input to control boiler on/off demand directly without using the internal setpoint. The 4-20mA selection is used to enable a remote multiple boiler controller to control the Sage2.X Control: Local: 4-20mA Input on Terminal 9 & 10 is ignored. 4-20mA 4-20mA Input on Terminal 9 & 10 is used to control firing Rate % directly. Modbus Modbus input used to control firing Rate % directly.
Local	Local, 4-20mA	**Central Heat Setpoint Source** Sets the remote (Energy Management System) control mode as follows: Local: Local setpoint and modulation rate is used. 4-20mA input on Terminal 9 & 10 is ignored. 4-20mA 4-20mA Input on Terminal 9 & 10 is used as the temperature setpoint. The following two parameters may be used to adjust the signal range. Modbus Modbus is used as the temperature setpoint.
130°F (54.4°C)	80°F (26.7°C) - Central Heat Setpoint	**Central Heat 4-20mAdc Setup, 4 mA Water Temperature*** Sets the Central Heat Temperature Setpoint corresponding to 4mA for signal input on terminal 9 & 10. Current below 4mA is considered invalid, (failed or incorrect wired input).
180°F (82.2°C)	80°F (26.7°C) - Central Heat Setpoint	**Central Heat 4-20mAdc Setup, 20 mA Water Temperature*** Sets the Central Heat Temperature Setpoint corresponding to 20mA for signal input on terminal 9 & 10. Current above 20mA is considered invalid, (failed or incorrect wired input).
Local	Local, Modbus	**Central Heat Demand Source** This parameter enables a Modbus input to be take the place of the Heating Thermostat Input: Local Local Heating Thermostat input is used for Central Heat demand. Modbus Modbus input is used for Central Heat demand.

* Only visible when Central Heat Setpoint Source is set to 4-20mA.

Important Product Safety Information
Refractory Ceramic Fiber Product

WARNING **The Service Parts list designates parts that contain refractory ceramic fibers (RCF). RCF has been classified as a possible human carcinogen. When exposed to temperatures above 1805°F, such as during direct flame contact, RCF changes into crystalline silica, a known carcinogen. When disturbed as a result of servicing, these substances become airborne and, if inhaled, may be hazardous to your health.**

AVOID Breathing Fiber Particulates and Dust

Precautionary Measures:

Do not remove or replace RCF parts or attempt any service work involving RCF without wearing the following protective gear:

1. A National Institute for Occupational Safety and Health (NIOSH) approved respirator
2. Long sleeved, loose fitting clothing
3. Gloves
4. Eye Protection

- Take steps to assure adequate ventilation.
- Wash all exposed body areas gently with soap and water after contact.
- Wash work clothes separately from other laundry and rinse washing machine after use to avoid contaminating other clothes.
- Discard used RCF components by sealing in an airtight plastic bag. RCF and crystalline silica are not classified as hazardous wastes in the United States and Canada.

First Aid Procedures:

- If contact with eyes: Flush with water for at least 15 minutes. Seek immediate medical attention if irritation persists.
- If contact with skin: Wash affected area gently with soap and water. Seek immediate medical attention if irritation persists.
- If breathing difficulty develops: Leave the area and move to a location with clean fresh air. Seek immediate medical attention if breathing difficulties persist.
- Ingestion: Do not induce vomiting. Drink plenty of water. Seek immediate medical attention.

Asphyxiation Hazard. This boiler requires regular maintenance and service to operate safely. Follow the instructions contained in this manual.

- **Improper installation, adjustment, alteration, service or maintenance can cause property damage, personal injury or loss of life. Read and understand the entire manual before attempting installation, start-up operation, or service. Installation and service must be performed only by an experienced, skilled, and knowledgeable installer or service agency.**
- **This boiler must be properly vented.**
- **This boiler needs fresh air for safe operation and must be installed so there are provisions for adequate combustion and ventilation air.**
- **Asphyxiation Hazard. The interior of the venting system must be inspected and cleaned before the start of the heating season and should be inspected periodically throughout the heating season for any obstructions. A clean and unobstructed venting system is necessary to allow noxious fumes that could cause injury or loss of life to vent safely and will contribute toward maintaining the boiler's efficiency.**
- **Installation is not complete unless a safety relief valve is installed into the tapping located on left side of appliance or the supply piping. - See the Water Piping and Trim Section of this manual for details.**

  This boiler is supplied with safety devices which may cause the boiler to shut down and not re-start without service. If damage due to frozen pipes is a possibility, the heating system should not be left unattended in cold weather; or appropriate safeguards and alarms should be installed on the heating system to prevent damage if the boiler is inoperative.
- **Burn Hazard. This boiler contains very hot water under high pressure. Do not unscrew any pipe fittings nor attempt to disconnect any components of this boiler without positively assuring the water is cool and has no pressure. Always wear protective clothing and equipment when installing, starting up or servicing this boiler to prevent scald injuries. Do not rely on the pressure and temperature gauges to determine the temperature and pressure of the boiler. This boiler contains components which become very hot when the boiler is operating. Do not touch any components unless they are cool.**
- **Respiratory Hazard. Boiler materials of construction, products of combustion and the fuel contain alumina, silica, heavy metals, carbon monoxide, nitrogen oxides, aldehydes and/or other toxic or harmful substances which can cause death or serious injury and which are known to the state of California to cause cancer, birth defects and other reproductive harm. Always use proper safety clothing, respirators and equipment when servicing or working nearby the appliance.**
- **Failure to follow all instructions in the proper order can cause personal injury or death. Read all instructions, including all those contained in component manufacturers manuals which are provided with the boiler before installing, starting up, operating, maintaining or servicing.**
- **All cover plates, enclosures and guards must be in place at all times.**

NOTICE **This boiler has a limited warranty, a copy of which is included with this boiler. It is the responsibility of the installing contractor to see that all controls are correctly installed and are operating properly when the installation is complete.**

DANGER **Explosion Hazard. Electrical Shock Hazard. Burn Hazard. This boiler uses flammable gas, high voltage electricity, moving parts, and very hot water under high pressure. Assure that all gas and electric power supplies are off and that the water temperature is cool before attempting any disassembly or service.**

Do not attempt any service work if gas is present in the air in the vicinity of the boiler. Never modify, remove or tamper with any control device.

WARNING **This boiler must only be serviced and repaired by skilled and experienced service technicians.**

- **If any controls are replaced, they must be replaced with identical models.**
- **Read, understand and follow all the instructions and warnings contained in all the sections of this manual.**
- **If any electrical wires are disconnected during service, clearly label the wires and assure that the wires are reconnected properly.**
- **Never jump out or bypass any safety or operating control or component of this boiler.**
- **Read, understand and follow all the instructions and warnings contained in ALL of the component instruction manuals.**
- **Assure that all safety and operating controls and components are operating properly before placing the boiler back in service.**
- **Annually inspect all vent gaskets and replace any exhibiting damage or deterioration.**

NOTICE **Warranty does not cover boiler damage or malfunction if the following steps are not performed at the intervals specified.**

A. Continuously:

1. **Keep the area around the boiler** free from combustible materials, gasoline and other flammable vapors and liquids.
2. **Keep the area around the combustion air inlet terminal** free from contaminates and obstructions to combustion air flow.
3. **Keep the boiler room ventilation openings** open and unobstructed.

B. Monthly Inspections:

1. **Inspect the vent piping and outside air intake piping** to verify they are open, unobstructed and free from leakage or deterioration. Check rodent screens in vent and air intake terminations to verify they are clean and free of debris. Call the service technician to make repairs if needed.
2. **Inspect the condensate drain system** to verify it is leak tight, open and unobstructed. Call the service technician if the condensate drain system requires maintenance.
3. **Inspect the flue temperature sensor cap** to verify that it is free from leakage and deterioration. Call the service technician to make repairs, if needed.
4. **Inspect the water and gas lines** to verify they are free from leaks. Call the service technician to make repairs if required.

NOTICE **Water leaks can cause severe corrosion damage to the boiler or other system components. Immediately repair any leaks found.**

C. Annual Inspections and Service: In addition to the inspections listed above the following should be performed by a service technician once every year.

1. **Follow the procedure** for turning the boiler off per Figure 35 “Operating Instructions”.
2. **Inspect the wiring** to verify the conductors are in good condition and attached securely.

CAUTION **ATTENTION Electrical Shock Hazard. Label all wires prior to disconnection when servicing controls. Wiring errors can cause improper and dangerous operation. Verify proper operation after servicing.**
Au moment de l´entretien des commandes, étiquetez tous les fils avant de les débrancher. Les erreurs de câblage peuvent nuire au bon fonctionnement et être dangereuses.

S´assurer que l´appareil fonctionne adéquatement une fois l´entretien terminé.

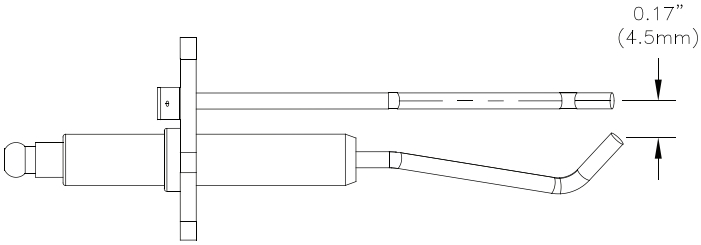

Figure 46: Igniter Electrode Gap

3. **Remove the igniter assembly and flame sensor** and inspect them for oxide deposits. Clean the oxide deposits from the igniter electrodes and flame sensor rod with steel wool. Do not use sandpaper for the cleaning. Inspect the ceramic insulators for cracks and replace the igniter assembly and/or flame sensor if necessary. Check the igniter electrode spacing gap. Refer to Figure 46 “Igniter Electrode Gap” for details.
4. **To gain access to boiler burner and combustion chamber,** first disconnect and remove gas inlet piping from gas valve. Then, remove six M6X1 hex flange nuts and take out the burner/blower/gas valve assembly from the boiler. To prevent stud breakage, apply a generous amount of good quality penetrating oil to nuts and let it soak in prior to attempting nut removal.
5. **Inspect the assembly** for lint and dust presence. If significant lint and dust accumulations are found, disassemble the blower/gas valve assembly to expose the swirl plate and blower inlet. For parts identification, refer to Section XIII “Repair Parts”. Vacuum these parts as required, being careful not to damage the vanes on the swirl plate.
6. **Vacuum any dust or lint** from the burner if present. If the burner shows any visual deterioration or corrosion signs, replace it immediately. Inspect the burner gasket and replace if necessary.
7. **Inspect the heat exchanger combustion chamber,** clean and vacuum any debris found on the surfaces. If required, brush the coils of the heat exchanger using a non-abrasive, non-metal bristle brush. Any cleaning of the combustion chamber with acid or alkali products is prohibited. Do not use any cleaning agents or solvents. If insulation disc has signs of damage, it must be replaced.
8. **Inspect the condensate trap** to verify it is open and free from debris. Inspect condensate line integrity between boiler and condensate neutralizer (if used), condensate neutralizer and the drain. Clean/repair if needed.

   If the condensate neutralizer is used, check pH before and after the neutralizer to determine neutralizing effectiveness. Replace limestone chips and clean out the neutralizer if needed.
9. **Inspect the flue temperature sensor cap** to verify that it is free from leakage and deterioration. Replace if needed.
10. **Inspect vent connections and vent connector** to heat exchanger seals to verify that they are free from leakage and deterioration. Repair as needed. Follow all instructions in Section IV “Venting” when reassembling vent system.
11. **Check for vent and air intake terminal** for obstructions and clean as necessary. Check rodent screens in vent and air intake terminations to verify they are clean and free of debris.

WARNING **Failure to properly secure the burner/blower/gas valve assembly to the heat exchanger could lead to property damage, personal injury or loss of life.**

12. **Reinstall the burner/blower/gas valve assembly** and secure with M6X1 hex flange nuts. Tighten the hex nuts in star pattern with wrench to 5Nm (44 lbf. In) torque.
13. **Reconnect any wiring** which has been disconnected.
14. **Verify** that the system pH is between 7.5 and 9.5.
15. **Inspect the heating system** and correct any other deficiencies prior to restarting the boiler.
16. **Inspect low water cutoff** (if used).
    a. Hydrolevel 1100H4 (100592-01). Refer to instructions provided with kit.

i. Annual. Check operation by pressing TEST button. See System Start-up.

ii. Every 5 years. Clean all surfaces in contact with water.

b. McDonnel & Miller 751 (80160718). Refer to instructions manual provided with control.

i. Annual. Inspect probe for scale build-up. Test operation. See System Start-up.

ii. Every 10 years. Replace probe.

iii. Every 15 years. Replace control.

c. Flush any field-sourced float low water cutoff per manufacturer's instructions.

17. **Follow Section IX** "System Start-up" before leaving installation.

18. **Perform the combustion test** outlined in Section IX "System Start-up".

D. Recommended Heating System Water Treatment Products:

1. System Cleaning and Conditioning:

a. The following heating system water treatment products are recommended for an initial existing heating system sludge removal, initial boiler cleaning from copper dust, flux residue and any boiler debris and for preventive treatment as corrosion/scale inhibitors:

i. Fernox™ Restorer (universal cleaner, sludge remover, scale remover, flux residue/debris remover, corrosion inhibitor)

ii. Fernox™ Protector (Alphi 11, CH#, Copal) (sludge remover, corrosion inhibitor)

Follow manufacturer application procedure for proper heating system/boiler cleaning and preventive treatment.

Above referenced products are available from Alent plc, Consumer Products Division, 4100 6th Avenue, Altoona, PA 16602, Tel: (972) 547-6002 and/or selected HVAC distributors. Contact U.S. Boiler Company for specific details.

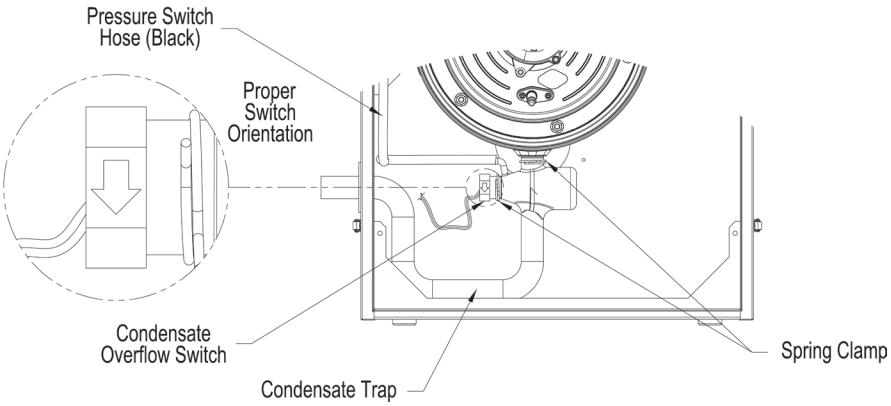

Figure 47: Condensate Overflow Switch Orientation

iii. Sentinel® X400 System Restorer (For Older Closed Loop Hydronic Heating Systems)

iv. Sentinel® X300 System Cleaner (For New Heating Systems)

v. Sentinel® X100 Inhibitor (For Protecting Closed Loop Hydronic Heating Systems Against Lime scale And Corrosion)

Follow manufacturer application procedure for proper heating system/boiler cleaning and preventive treatment.

Above referenced products are available from Douglas Products and Packaging, 1550 E. Old 210 Highway, Liberty, MO 64068, Tel:(877) 567-2560 (Toll Free) and/or selected HVAC distributors.

2. System Freeze Protection:

a. The following heating system freeze protection products are recommended for Alpine boilers:

i. Fernox™ Protector Alphi 11 (combined antifreeze and inhibitor).

Follow manufacturer application procedure to insure proper antifreeze concentration and inhibitor level.

Above referenced product is available from Alent plc, Consumer Products Division, 4100 6th Avenue, Altoona, PA 16602, Tel: (972) 547-6002 and/or selected HVAC distributors. Contact U.S. Boiler Company for specific details.

ii. Sentinel® X500 Inhibited Antifreeze (combined antifreeze and inhibitor)

Follow manufacturer application procedure to insure proper antifreeze concentration and inhibitor level.

Above referenced products are available from Douglas Products and Packaging, 1550 E. Old 210 Highway, Liberty, MO 64068, Tel:(877) 567-2560 (Toll Free) and/or selected HVAC distributors.

b. Equivalent system freeze protection products may be used in lieu of product referenced above. In general, freeze protection for new or existing systems must use specially formulated glycol, which contains inhibitors, preventing the glycol from attacking the metallic system components. Insure that system fluid contains proper glycol concentration and inhibitor level. The system should be tested at least once a year and as recommended by the manufacturer of the glycol solution. Allowance should be made for expansion of the glycol solution.

WARNING **Poison Hazard. Use only inhibited propylene glycol solutions specifically formulated for hydronic systems. Do not use ethylene glycol, which is toxic and can attack gaskets and seals used in hydronic systems. Use of ethylene glycol could result in property damage, personal injury or death.**

E. Condensate Overflow Switch and Condensate Trap Removal and Replacement:

For removal or replacement of the condensate overflow switch and/or condensate trap follow the steps below. For parts identification, refer to Section XIII "Repair Parts".

1. **Condensate Overflow Switch Removal and Replacement:**
   a. Disconnect power supply to boiler.
   b. Remove 2 wire nuts and disconnect overflow switch wire pigtails from boiler wiring.
   c. Using pliers, release spring clip securing the overflow switch to condensate trap body and remove the switch. Note that the switch has factory applied silicon adhesive seal, which may have to be carefully cut all around to facilitate the switch removal.
   d. Insure the trap overflow switch port is not obstructed with silicon seal debris, clean as needed.
   e. Apply silicon sealant to the replacement switch threads and install the switch into the trap body making sure it is properly oriented - the arrow molded into the switch hex end side must face down for proper switch operation. See Figure 47 "Condensate Overflow Switch Orientation" for details.
   f. Reconnect the switch wire pigtails to the boiler wiring and secure with wire nuts.
   g. Restore power supply to boiler. Fill up the trap (see Section V "Condensate Disposal") and verify the switch operation.

2. **Condensate Trap Removal and Reinstallation:**
   a. Disconnect power supply to boiler.
   b. Remove 2 wire nuts and disconnect overflow switch wire pigtails from boiler wiring.

Outdoor Air Temperature Sensor Temperature versus Resistance
(P/N 102946-01)

(10kOhm NTC Sensor)

Outdoor Temperature		Ohms of Resistance
°F	°C	
-20	-28.9	106926
-10	-23.3	80485
0	-17.8	61246
10	-12.2	47092
20	-6.7	36519
30	-1.1	28558
40	4.4	22537
50	10.0	17926
60	15.6	14356
70	21.1	11578
76	24.4	10210
78	25.6	9795
80	26.7	9398
90	32.2	7672
100	37.8	6301
110	43.3	5203
120	48.9	4317

Header Temperature Sensor Temperature versus Resistance (P/N 101935-01 or 103104-01)

(10kOhm NTC Sensor), Beta of 3950

Temperature		Ohms of Resistance
°F	°C	
32	0	32648
50	10	19898
68	20	12492
77	25	10000
86	30	8057
104	40	5327
122	50	3602
140	60	2488
158	70	1752
176	80	1256
194	90	916
212	100	697
248	120	386

Supply, Return and Stack Temperature Sensor Temperature versus Resistance

(12kOhm NTC Sensor), Beta of 3750

Temperature		Ohms of Resistance
°F	°C	
32	0	36100
50	10	22790
68	20	14770
77	25	12000
86	30	9810
104	40	6653
122	50	4610
140	60	3250
158	70	2340
176	80	1710
194	90	1270
212	100	950
230	110	730
248	120	560

c. Disconnect pressure switch hose from condensate trap.
d. Disconnect outside condensate compression fitting from condensate trap.
e. Using pliers, release spring clip securing the overflow switch to condensate trap body and remove the switch. Note that the switch has factory applied silicon adhesive seal, which may have to be carefully cut all around to facilitate the switch removal.
f. Using pliers, release spring clip securing condensate trap body to the heat exchanger bottom drain connection.
g. First, pull the trap downwards to release from the heat exchanger. Second, pull the trap end from left side jacket panel sealing grommet and remove the trap from boiler.
h. To reinstall the trap, reverse above steps.
i. If the original condensate overflow switch is to be re-used, follow the appropriate switch removal steps from Condensate Overflow Switch Removal and Replacement procedure above.
j. Insure that fresh silicon sealant is applied to the overflow switch threads and the switch is properly oriented relative to the trap body - the arrow molded into the switch hex side end must face down for proper switch operation. See Figure 47 “Condensate Overflow Switch Orientation” for details.
k. Insure that pressure switch hose is reconnected to the trap.
l. Restore power supply to boiler. Fill up the trap (see Section V “Condensate Disposal”) and verify the switch operation.

XII. Troubleshooting

WARNING **Electrical Shock Hazard. Turn off power to boiler before working on wiring.**

A. Troubleshooting problems where no error code is displayed.

Condition	Possible Cause
Boiler not responding to call for heat, “Status” and “Priority” show “Standby”.	Boiler is not seeing call for heat. Check thermostat or zone wiring for loose connection, miswiring, or defective thermostat/zone control.
Boiler not responding to a call for heat, “Status” shows “Standby” and “Priority” shows Central Heat or Domestic Hot Water.	Boiler is not firing, temperature is greater than setpoint. Water flow through boiler primary loop non-existent or too low.
Boiler Running but System or Boiler Circulator is not running	• Check wiring for loose connection, miswiring. • When there is a Domestic Hot Water Heat Request the System or Boiler pumps will be forced “off” when there “Run Pump for” parameter is set to “Central heat, off DHW demand” or “Central Heat, Optional Priority”. This has been set to allow all of the heat to be provided for fast indirect water heater recovery. After one hour of “priority protection” or the end of the Domestic Hot Water Heat Request the system and boiler pumps will be free to run.
Home is cold during mild weather days	• Increase Low Boiler Water Temperature parameter 5°F (2.8°C) per day.
Home is cold during cold weather days	• Increase High Boiler Water Temperature parameter 5°F (2.8°C) per day

B. Display Faults:

Faults are investigated by selecting the “Help” button from the “Home” screen. When a fault is active the “Help” button flashes and the home screen turns a red color. Continue to select flashing buttons to be directed to the Fault cause.

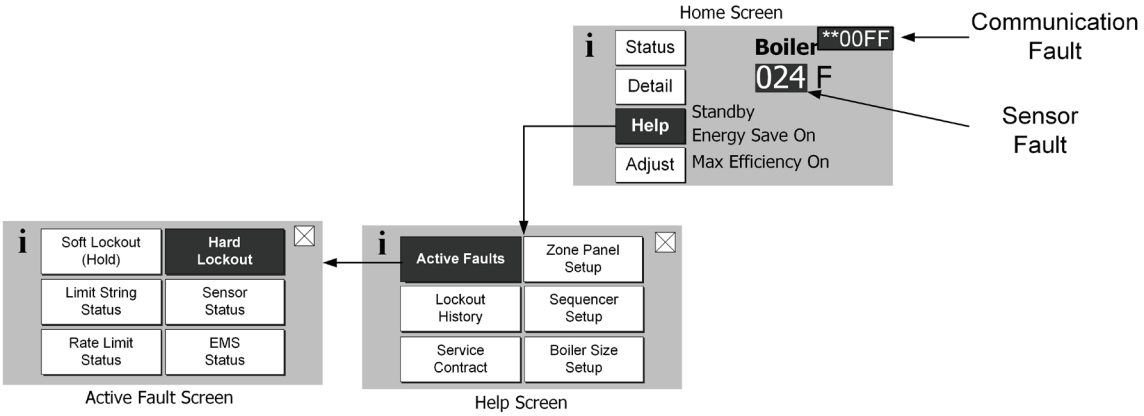

Figure 48: Help Menu

Indication	Condition	Possible Cause
Display Completely Dark Fan off, LWCO lights off, no green power light on Control	No 120Vac Power at Boiler	Check breaker and wiring between breaker panel and boiler.
Display Completely Dark, Fan running	No 24Vac Power to Control	- Loose 120Vac connection wiring between boiler J-Box and transformer - Loose 24 Vac connection wiring between transformer and Control.
Blinking Green power light on Control	Control Fault	- The green light is connected to internal power supply. The power supply is repeatedly starting and stopping (not normal) making the light flash. The microprocessors are not running. - Try disconnecting all terminals except 24VAC to power the Control. The green light should be steady. If it is not, then the control is defective. If steady, start plugging in all the connectors while watching the green light. When faulty wiring reconnected, green light will begin to flash.
Display Completely Dark but Boiler fires	No 5 Vdc Power to Display	- Loose 5 Vdc connection wiring between display and Control - Defective Display or Control.
****00FF or **ERFF**	display lost communication with control	- Loose or defective display harness - Defective Display - Defective Control
ER0011	Adjustment Mode Password Timeout	- The Control and Display are **NOT** defective. The password has timed out. Simply cycle power to the Display to restore operation.
ER0012	Control Failed	Defective Control. Replace Sage.

C. Help Screen Faults

Indication	Condition	Possible Cause
Zone Panel Setup Flashing	**Zone Panel 1 Setup** Flashing	Zone Panel 1 communication lost, typical for Panel 1 through 4: The zone panel's communication was established and then lost. Check the following to correct the issue: • Wiring between panel and boiler. • Zone panel DIP switch settings have changed: - Set Master/Slave switch to "Master" - Set Zone Control switch ZC1 to "ON" - Cycle power
	Zone Panel Failure Flashing	Zone Panel Electronics Failure: A Zone Panel
	Duplicate Zone Flashing	Duplicate Zone: The Control has detected duplicate zone panel numbers. Check the following to correct: • Each Zone Control DIP Switch must be set to a Unique setting: 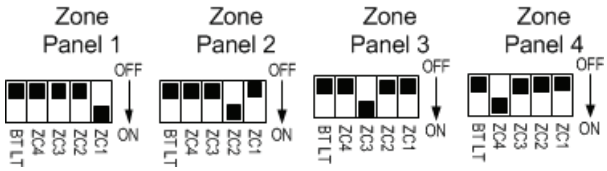 Note that when multiple ZC switches are set on ON the Zone Panel is reported as Zone Panel 1.
Sequencer Setup Flashing	Sequencer Setup Fault	This alarm is active if the slave boiler has lost communication with the Sequence Master. Check the following: - RJ 45 peer-to-peer network disconnected - Sequencer Master was Enabled and then Disabled - Master's Boiler has been powered down. - To clear fault restore communication or cycle power
Boiler Size Setup Flashing	Boiler Size Fault	**WARNING!** Boiler size setting may not match actual boiler size. The Boiler size setting determines min, max and light-off blower speeds. Incorrect boiler size can cause hazardous burner conditions and improper operation that may result in PROPERTY LOSS, PHYSICAL INJURY, OR DEATH. Refer to page 108 for boiler size setting instructions.

D. Help Screen Diagnostic Features

Indication	Possible Cause
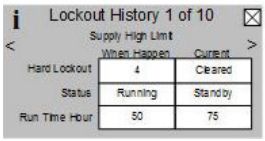	Lockout History is stored in a first-in, first-out basis. Each History file is stored with boiler run hour of when the lockout occurred. The "When happened" and "Current" provide: - "Current" is the run hour and status the boiler just finished. - "When happened" is the run hour and status when the lockout occurred.
	The user is given the contact information of the responsible service provider. Refer to page 114 for data entry instructions.

E. Active Fault Screen Faults

Indication	Condition	Possible Cause
Limit String Status 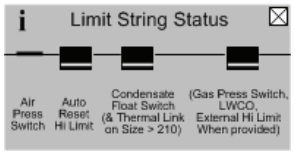 	Limit String Fault	The Limit String Status screen shows the faulty safety limit. A contact icon, either "open" or "closed", graphically represents each safety limit. The "closed" contact icon is steady; the "open" contact icon is blinking. For example, the screen shown to the left illustrates a "closed" Air Pressure Switch contact and an "open' Auto Reset High Limit contact. The Auto Reset High Limit is causing the boiler to stop firing. NOTE: Since the limit string items are wired in series, all limits downstream of the "open" limit will also appear on the screen as "open" (blinking) icons regardless of whether or not they are actually open.
Sensor Status 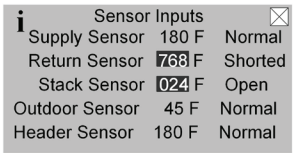 	Sensor Fault	The Sensor Status screen shows the status of all sensors. Possible states include: None: Feature requiring this sensor has not been selected. Normal: Sensor is working normally. Shorted: Sensor is shorted or is defective. Open: There is a break in the wiring between the Control and the sensor or the sensor is defective Out of Range: Sensor is defective or is being subjected to electrical noise. Unreliable: Sensor is defective or is being subjected to electrical noise. When a sensor fails "opened" or "shorted" the value is changed to reverse video (background black and value white) "024" or "768" respectively to indicate that there is a fault with the sensor.
Rate Limit 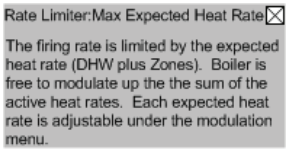 	Rate Limit	The following messages appear when the firing rate is limited or reduced to help avoid a lockout or save energy. Refer to Hard Lockout section for corrective actions - High Stack Temperature Limit - High Supply Temperature Limit - High Differential Temperature Limit The following messages appear as part of normal start and stop sequences: - Minimum Modulation (normal start/stop sequence) - Low Fire Hold Rate: Low fire hold rate is a normal start-up rate hold used to help ensure system temperature feedback prior to release to modulation. Low Fire Hold Time may be adjusted. Refer to the "Changing Adjustable Parameters", Paragraph F, for additional information. - Maximum Expected Heat Rate: Maximum Expected Heat Rate limit is a normal start-up rate hold used to save energy. This limit helps reduce extra cycles and save energy. Boiler is free to modulate up to the sum of the active zones and domestic hot water expected heat rates. Each zone heat rate is adjustable and may be modified under the modulation menu. Refer to the "Changing Ad justable Parameters", Paragraph F, for additional information.
EMS Status 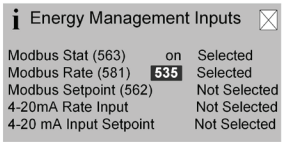 	Energy Management System Fault	The Energy Management System (EMS) fault screen provides input fault status. When an input is shown as "Not Selected" it is not required for this application or has not yet been selected. These options are selected under the "Energy Management" Adjust mode menu. Modbus Input Failure: If a modus input is selected and out of range or not present a "535" value is shown reverse video (background black and value white). To fix the problem check the input source and check that the input is properly connected. 4-20mA Input Failure: Failure status for the 4-20mA input is the same as shown under Sensor Fault.

F. Troubleshooting problems where a Soft Lockout Code is displayed. When a soft lockout occurs, the boiler will shut down, the display will turn red and the "Help" button will "blink". Select the "blinking" "Help" button to determine the cause of the soft lockout. The boiler will automatically restart once the condition that caused the lockout is corrected.

Soft Lockout Codes Displayed

Lockout Number	Condition	Possible Cause
1 Anti Short Cycle	Minimum time between starts has not been reached. Normal delay used to avoid excessive cycles.	
2 Boiler Safety Limit Open	Boiler Safety Limit wired to terminals J6-1, 2 or 3 OPEN: • Condensate Trap Float Switch contact open. • **Thermal Link Switch contact open.** • Burner Door Thermostat with manual reset contact open. • Air Pressure Switch contact open. • Auto Reset High Limit contact open.	• Loose wiring to limit device. • Auto Reset Supply high limit sensor detected temperature in excess of 200°F. • Defective Auto Reset Supply High Limit Switch. • Plugged Condensate Trap - also check to ensure boiler is level. • **Thermal Link Switch blown due to temperature rise above 604°F. (318°C)** • Burner Door Thermostat with manual reset contact open due to temperature rise above 500°F (260°C) - check the cause of overheating (burner door insulation, loose mounting, etc.). • Air Pressure Switch contact open - check for blocked vent. • See possible causes for "Hard Lockout 4". **NOTE** Block Vent Special Note Before a call for heat the air pressure switch is closed. When there is a call for heat with a blocked vent the air pressure switch will open (due to excessive pressure of the blower against a blocked flue pipe) after the blower starts. The control stops the start sequence and stops the blower. After the blower stops the pressure switch re-closes and the cycle continues. The displays shows the cause of trip for only the time the pressure switch is open.
3 Boiler Safety Limit Open	Boiler Safety Limit, or External Limit wired to terminals J5-1 OPEN: • Jumper for External Limit wired to terminals 11 and 12 or device connected to it open.	• See possible causes for "Hard Lockout 4". • Loose wiring to limit device. • External Limit defective or jumper not installed. • If yellow light on LWCO is on, system is low on water. • If neither yellow or green light is on, check LWCO harness.
7 Return sensor fault	Shorted or open return temperature sensor.	• Shorted or mis-wired return sensor wiring. • Defective return sensor.
8 Supply sensor fault	Shorted or open supply temperature sensor.	• Shorted or mis-wired supply sensor wiring. • Defective supply sensor.
9 DHW sensor fault	Shorted or open Domestic Hot Water (DHW) temperature sensor.	• Shorted or mis-wired DHW sensor wiring. • Defective DHW sensor.
10 Stack sensor fault	Shorted or open flue gas (stack) temperature sensor.	• Shorted or mis-wired flue temperature sensor wiring. • Defective flue temperature sensor.
11 Ignition failure	Models ALP080B through ALP285B - flame failure after 5 tries to restart.	• No gas pressure. • Gas pressure under minimum value shown on rating plate. • Gas line not completely purged of air. • Defective Electrode. • Loose burner ground connection. • Defective Ignition Cable. • Defective gas valve (check for 24 Vac at harness during trial for ignition before replacing valve). • Air-fuel mixture out of adjustment - consult factory.
13 Flame rod shorted to ground	Flame rod shorted to ground	• Shorted or mis-wired flame rode wiring. • Defective flame rod.
14 △T inlet/outlet high	Temperature rise between supply and return is too high.	• Inadequate boiler water flow. Verify that circulator is operating and that circulator and piping are sized per Section VI of this manual.
15 Return temp higher than supply	The Control is reading a return sensor temperature higher than the supply sensor temperature. Condition must be present for at least 75 seconds for this error code to appear.	• Flow through boiler reversed. Verify correct piping and circulator orientation. • No boiler water flow. Verify that system is purged of air and that appropriate valves are open. • Sensor wiring reversed. • Supply or return sensor defective.
16 Supply temp has risen too quickly	Supply water temperature has risen too quickly.	• See possible causes for "Hard Lockout 4". • Inadequate boiler water flow. • Verify that circulator is operating and that circulator and piping are sized per Section VI of this manual.
17 Blower speed not proved	Normal waiting for blower speed to match purge and light-off setpoint.	

G. Troubleshooting problems where a Hard Lockout Code is displayed. When a hard lockout occurs, the boiler will shut down, the display will turn red and the "Help" button will "blink". Select the "blinking" "Help" button to determine the cause of the Hard Lockout. Once the condition that caused the lockout is corrected, the boiler will need to be manually reset using the Reset button on the "Active Fault" display or located on the Sage2.X Control.

Alarm Output Contact

The Control includes an alarm output contact located on Control terminals J6 - 7 & 8. The alarm contact closes when the Control goes into a manual reset Hard Lockout. The list of Hard Lockouts is shown below.

Hard Lockout Codes Displayed

Lockout Number	Condition	Possible Cause
4 Supply high limit	Sage2.X supply sensor detected temperatures in excess of 210°F.	• Heating load at time of error was far below the minimum firing rate of the boiler. • Defective system circulator or no flow in primary loop. • Defective boiler circulator, no flow or insufficient flow in boiler loop. • Control system miswired so that the boiler operation is permitted when no zones are calling.
5 DHW high limit	Sage2.X DHW sensor detected temperatures in excess of Setpoint.	• DHW load at time of error was far below the minimum firing rate of the boiler. • Control system miswired so that boiler operation is permitted when no DHW are calling.
6 Stack High limit	Sage2.X Flue gas (Stack) sensor detected temperatures in excess of 204°F (95.6°C).	• Heat exchanger needs to be cleaned. • Boiler over-fired. • Air-fuel mixture out of adjustment - consult factory.
12 Flame detected out of sequence	A flame signal was present when there should be no flame.	• Defective gas valve - make sure inlet pressure is below maximum on rating plate before replacing valve.
18 Light off rate proving failed	Blower is not running at Light-off rate when it should or blower speed signal not being detected by Sage2.X.	• Loose connection in 120 VAC blower wiring. • Loose or miswired blower speed harness. • Defective blower
19 Purge rate proving failed	Blower is not running at Purge rate when it should or blower speed signal not being detected by Sage2.X.	• Loose connection in 120 VAC blower wiring. • Loose or miswired blower speed harness. • Defective blower
20 Invalid Safety Parameters	Unacceptable Sage2.X control Safety related parameter detected.	Parameters change was invalid. Check parameter selection and reset Control. Contact factory if problem persists.
21 Invalid Modulation Parameter	Unacceptable Sage2.X control Modulation related parameter detected.	Reset the control.
22 Safety data verification needed	Safety related parameter change has been detected and a verification has not been completed.	Safety related Sage2.X control parameter has been changed and verification has not been performed.
23 24VAC voltage low/high	Sage2.X control 24Vac control power is high or low.	• Loose connection in 24Vac VAC power wiring. • Loose or miswired 24Vac harness. • Miswired wiring harness causing power supply short to ground. • Defective transformer. • Transformer frequency, voltage and VA do not meet specifications.
24 Fuel Valve Error	Power detected at fuel valve output when fuel valve should be off.	• Loose or defective gas valve harness. Check electrical connections. • Defective gas valve (check for 24 Vac at harness during trial for ignition before replacing valve).
25 Hardware Fault	Internal control failure.	• Reset the control. If problem reoccurs, replace the Sage.
26 Internal Fault	Internal control failure.	• Reset the control. If problem reoccurs, replace the Sage.
27 Unknown Fault	Unknown Fault	• Reset the control. If problem reoccurs, replace the Sage..

XIII. Repair Parts

All Alpine™ Series Repair Parts may be obtained through your local U.S. Boiler Wholesale distributor. Should you require assistance in locating a U.S. Boiler distributor in your area, or have questions regarding the availability of U.S. Boiler products or repair parts, please contact U.S. Boiler Customer Service at (717) 481-8400 or Fax (717) 481-8408.

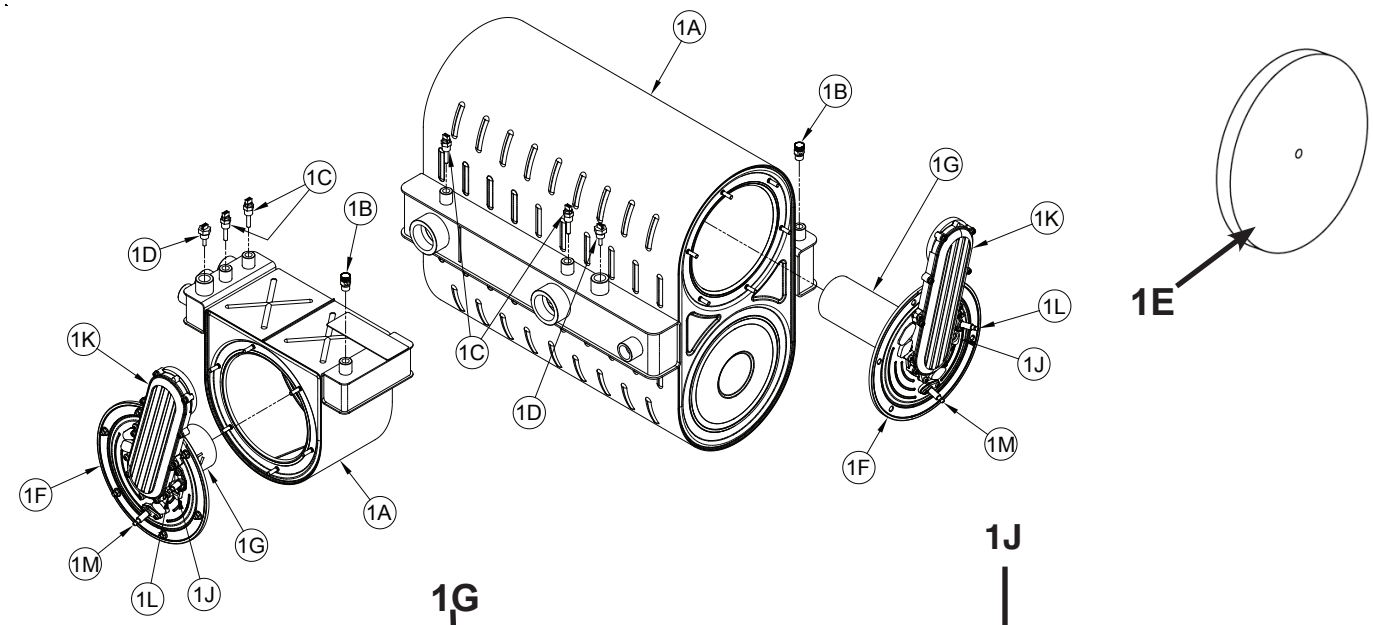

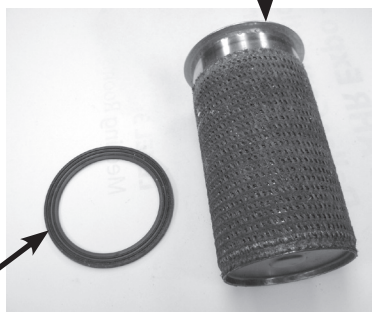

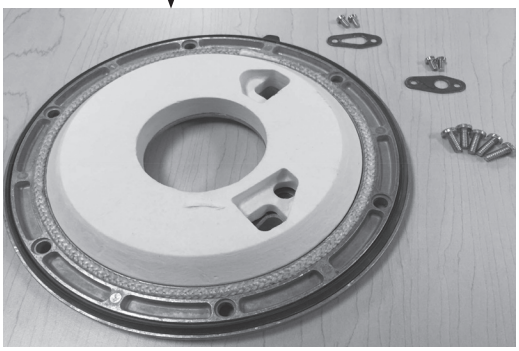

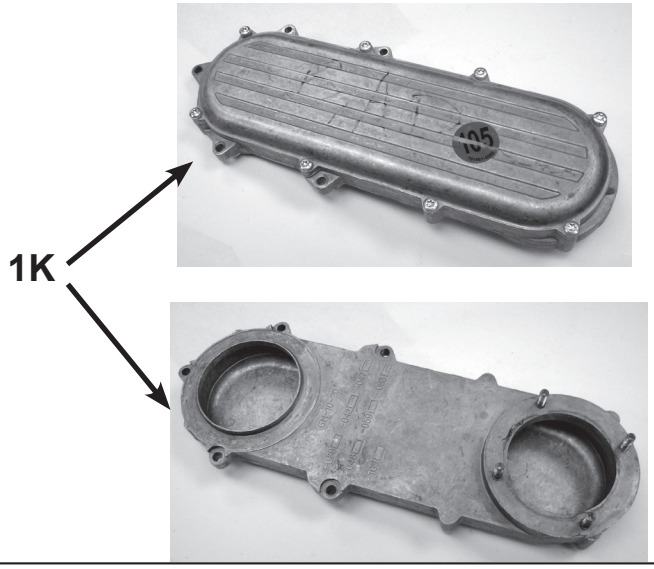

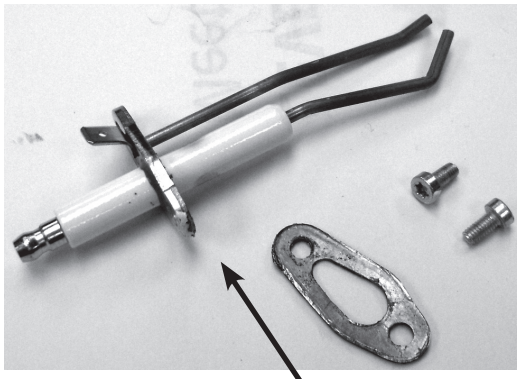

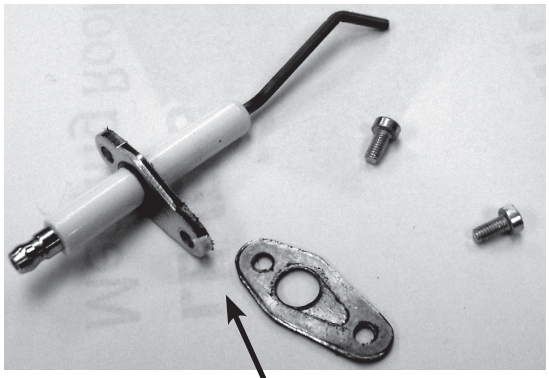

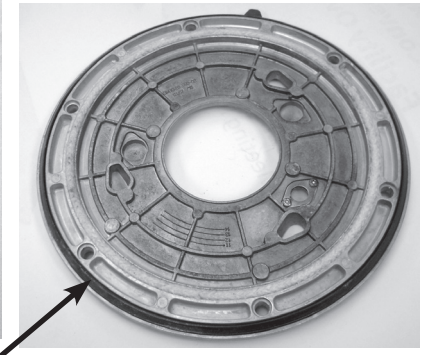

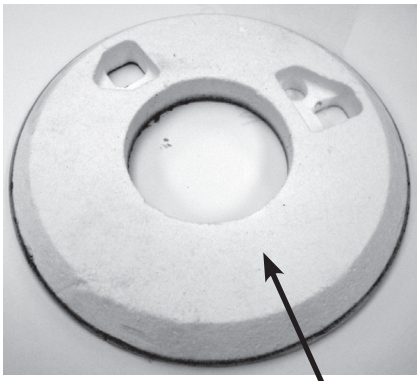

Key No.	Description	Part Number				
		ALP080B	ALP105B	ALP150B	ALP210B	ALP285B
Bare Heat Exchanger and Related Components (1B through 1E)						
1A	Replacement Heat Exchanger assembly (includes bare heat exchanger, supply and return water temperature sensors, air vent valve, high limit, header gaskets)	102513-01	102513-02	102513-03	102513-04	102513-05
1B	Air Vent Valve	101586-01				
1C	Supply/Return Water Temp Sensor- (2 per boiler)	101685-01				
1D	High Limit	107121-01				
1E	Replacement Rear Insulation Disc Kit	105651-01				
N/A	Replacement Rear Insulation Disc and Thermal Link Switch Kit (Not Shown, includes insulation disc, thermal link switch and instructions)	104998-01				
N/A	Thermal Link Switch (Backside of Duo Heat Exchanger) (Not Shown)	N/A				103321-01
N/A	Flue Exit Gasket Kit (Gasket is inside of Vent Termination of Heat Exchanger) (Not Shown, includes gasket and Molykot 111 grease)	104500-01				104501-01
Burner Components						
N/A	Replacement Burner Kit (Not Shown, includes burner head, burner head seal and hardware)	105188-01	105188-02	105188-03	105188-04	105188-05
1G	Burner Head	101731-01	101731-02	101731-03	101731-04	101731-05
1H	Burner Head Seal	102739-01				
1J	Replacement Burner Door Kit (Not Shown, includes partially assembled burner door, flame sensor & igniter gaskets, door insulation and thermostat. Does not include flame sensor and igniter)	105185-01				104992-01
1K	Gas/Air Intake Duct Assembly	101725-01			101725-02	
1L	Replacement Igniter Kit	103005-01				
1M	Replacement Flame Sensor Kit	103339-01				
1N	Burner Door Outer Seal	101730-01				
1P	Burner Door Insulation Kit (Warning: Contains RCF	105650-01				
N/A	Burner Door Thermostat with Manual Reset (Not Shown)	N/A				104569-01
N/A	Burner Door M6x1 Hex Flange Nut (Not Shown, 6 per boiler)	101724-01				
N/A	Replacement Gas/Air duct Kit (Not Shown, includes gas/air duct, duct gaskets and hardware)	105186-01			104994-01	

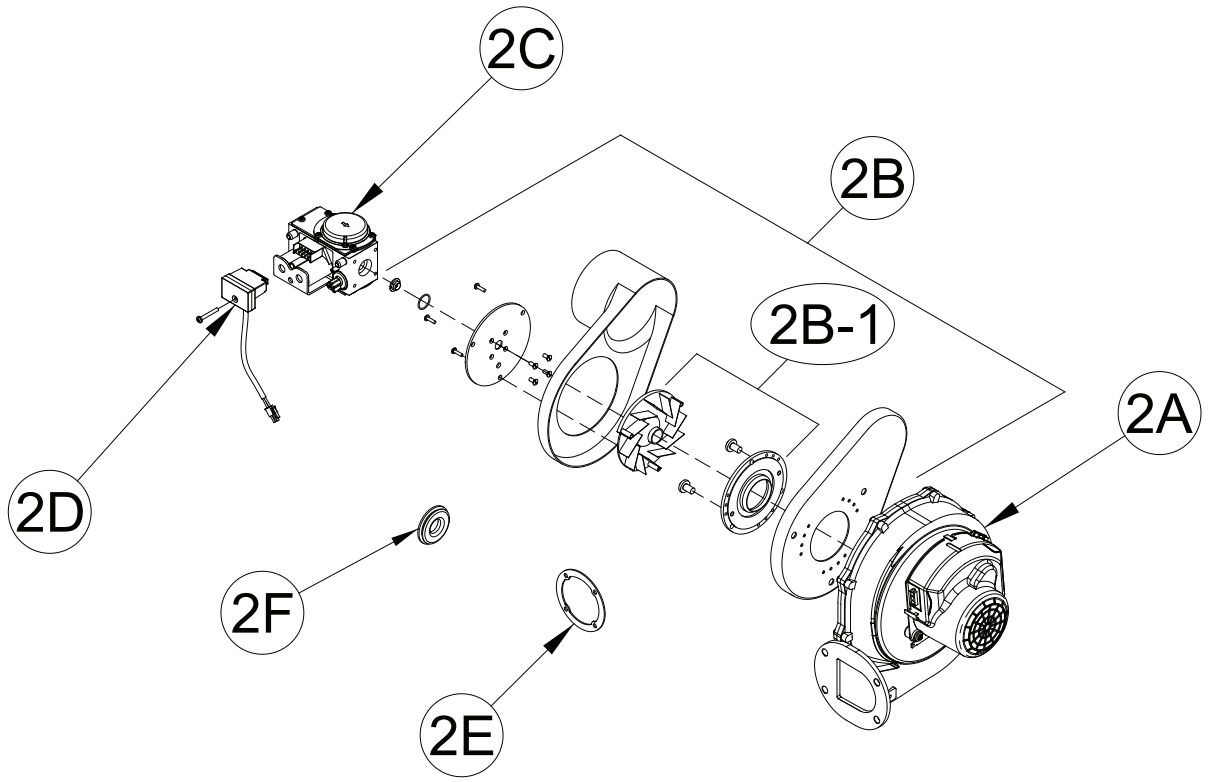

Key No.	Description		Part Number				
			ALP080B	ALP105B	ALP150B	ALP210B	ALP285B
2A, 2E	Blower Repair Kit (includes blower, hardware, and gasket)		105756-01		105757-01	105758-01	104999-01
2B	Blower Inlet Shroud Assembly [includes Gas Orifice; Gas Orifice O-Ring; (3x) M4x20 mm or (3x) M4x25 mm self-threading screws; Injector Plate; (4x) M4 x 10 mm flat head screws; Air Intake Adapter - Air Connection Side; Swirl Plate; (2x) M5 x 16 mm Phillips flat head screws; Blower Adapter Plate; Air Intake Adapter - Blower Side; Spacer Plate (for size 080 through 150 only)].		101704-01	101704-02		101704-03	101704-04
2B-1	Blower Inlet Repair Kit (Includes Blower Adapter Plate, Swirlplate and Mounting Hardware)		104620-01	104620-02		104620-03	104620-04
2C	Gas Valve		102975-01			102975-04	102975-05
2D	Gas Valve Harness with Plug	MCBA Control	102971-02				
		Sage2.X Control	102971-01				
2E	Blower Outlet Gasket Repair Kit		106029-01				
2F	Rubber Grommet, Gas Line		820SOL0001				101638-01

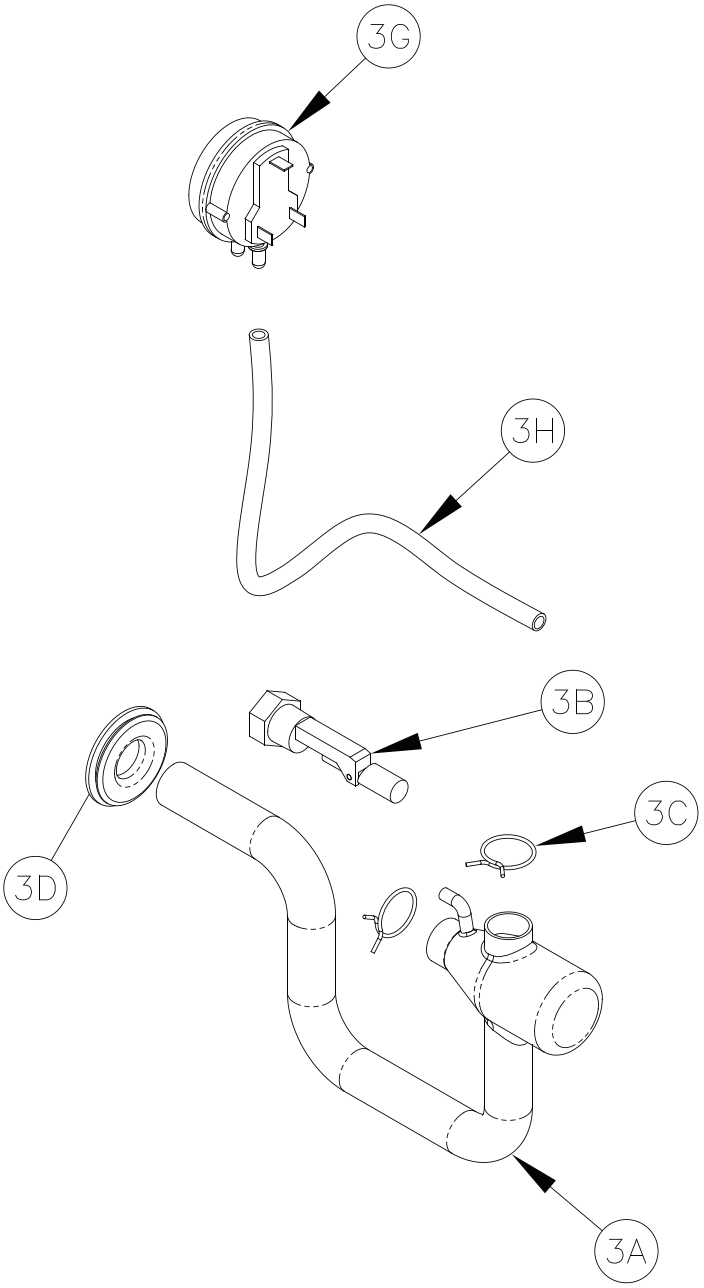

Key No.	Description	Part Number				
		ALP080B	ALP105B	ALP150B	ALP210B	ALP285B
	Repair Condensate Trap and Related Components					
3A	Replacement Condensate Trap Kit	104704-01				
3B	Replacement Condensate Float Switch Kit	105005-01				
3C	Spring Clip, Condensate Trap - (2 per boiler)	101632-01				
3D	Rubber Grommet, Condensate Trap	101595-01				
3G	Air Pressure Switch	104425-01		104426-01		
3H	Air Pressure Switch Tubing, Black	9 in. 7016039				13.5 in. 7016041
N/A	Condensate Neutralizer Kit (Not Shown)	101867-01				
N/A	Limestone Chips (Not Shown)	101873-01				

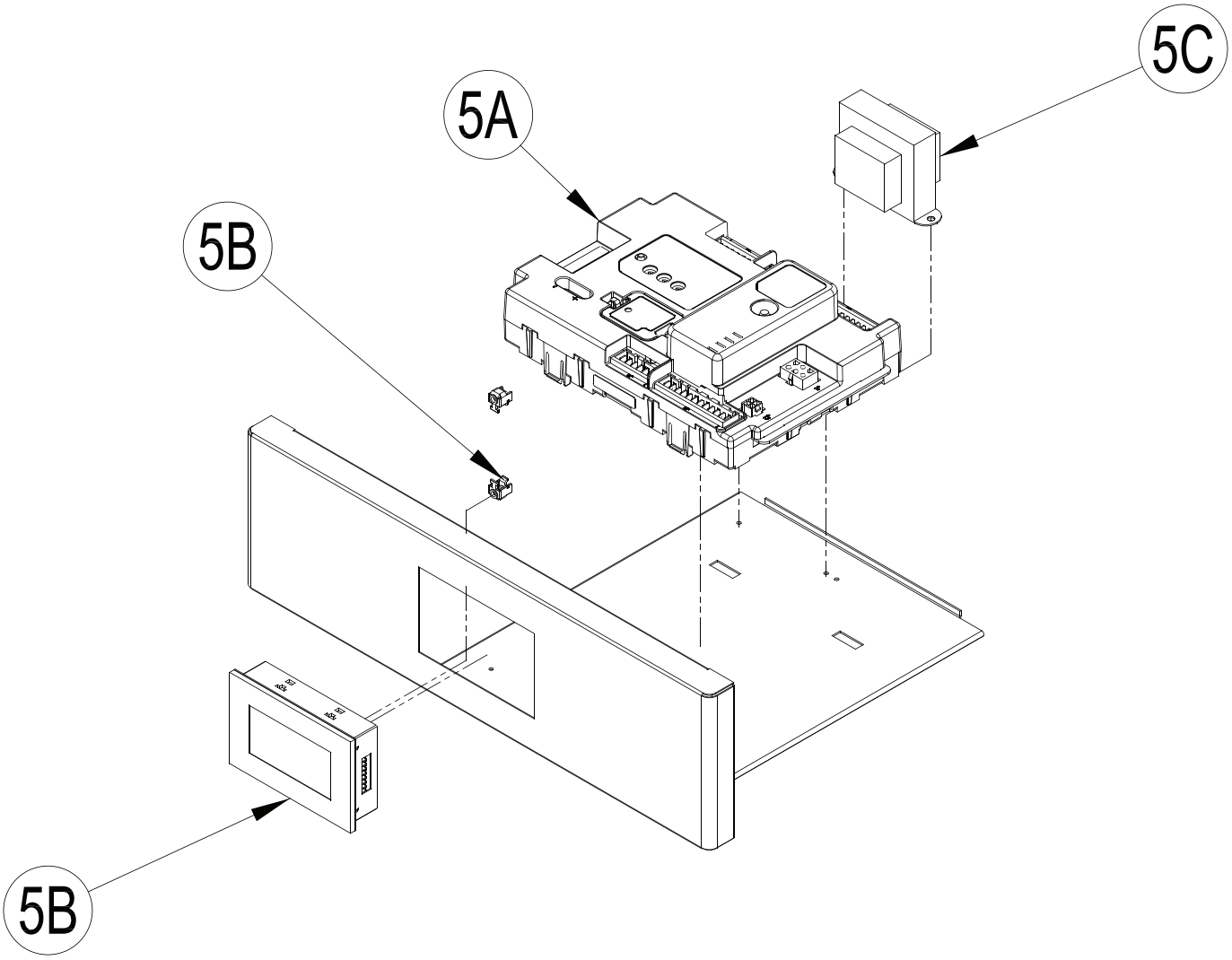

Key No.	Description	Part Number											
		080 -02	080 -27	105 -02	105 -27	150 -02	150 -27	210 -02	210 -27	285 -07	150 -70	210 -70	285 -70
5A	Sage2.X (Programmed) Repair Kit	106191-01									106191-02		106191-03
5B	Programmed Display Repair Kit (with Mounting Hardware)	106217-04											
5C	Repair Transformer Kit	106034-01											

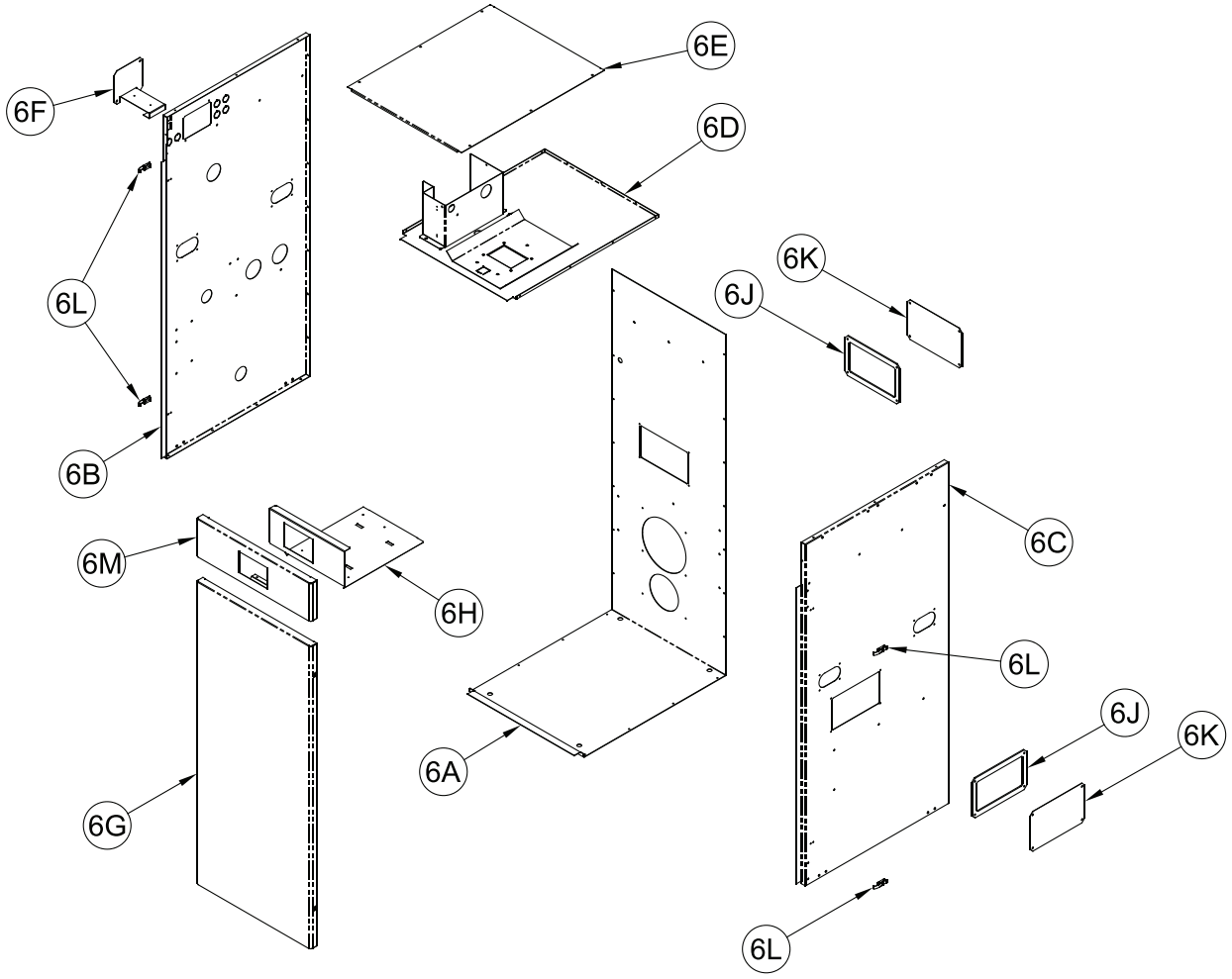

Key No.	Description	Part Number				
		ALP080B	ALP105B	ALP150B	ALP210B	ALP285B
6A	Jacket, Rear/Bottom Panel	101217-01	101217-02	101217-03	101217-04	101217-05
6B	Replacement Left Side Panel Kit (includes labels, access panels, grommets and header gaskets)	105184-01	105184-02	105184-03	105184-04	105184-05
6C	Replacement Right Side Panel Kit (includes labels, access panels and gaskets)	105183-01	105183-02	105183-03	105183-04	105183-05
6D	Partition Shelf Assembly	102831-01	102831-02	102831-03	102831-04	102831-05
6E	Replacement Top Panel Kit (includes labels)	105181-01	105181-02	105181-03	105181-04	105181-05
6F	High Voltage Terminal Bracket	102780-01				
6G	Replacement Front Door Kit (includes labels)	105016-02				105016-01
6H	Control Tray	103336-01				
6J	Replacement Access Panel Kit, 5 in. x 8 in. (includes gasket)	105010-01				
6K	Access Panel Gasket, 5 in. x 8 in.	102877-01				
6L	Replacement Door Latch Kit (includes rivets)	105012-01				
6M	Upper Front Panel	102778-01				
N/A	Replacement Handle Kit (not shown, includes gasket)	105015-01				
N/A	Nylon Glide Replacement Kit (not shown, includes 6 glides)	105014-01				
N/A	Replacement Stacking Bracket Kit (not shown, includes 4 brackets and hardware)	105022-01				

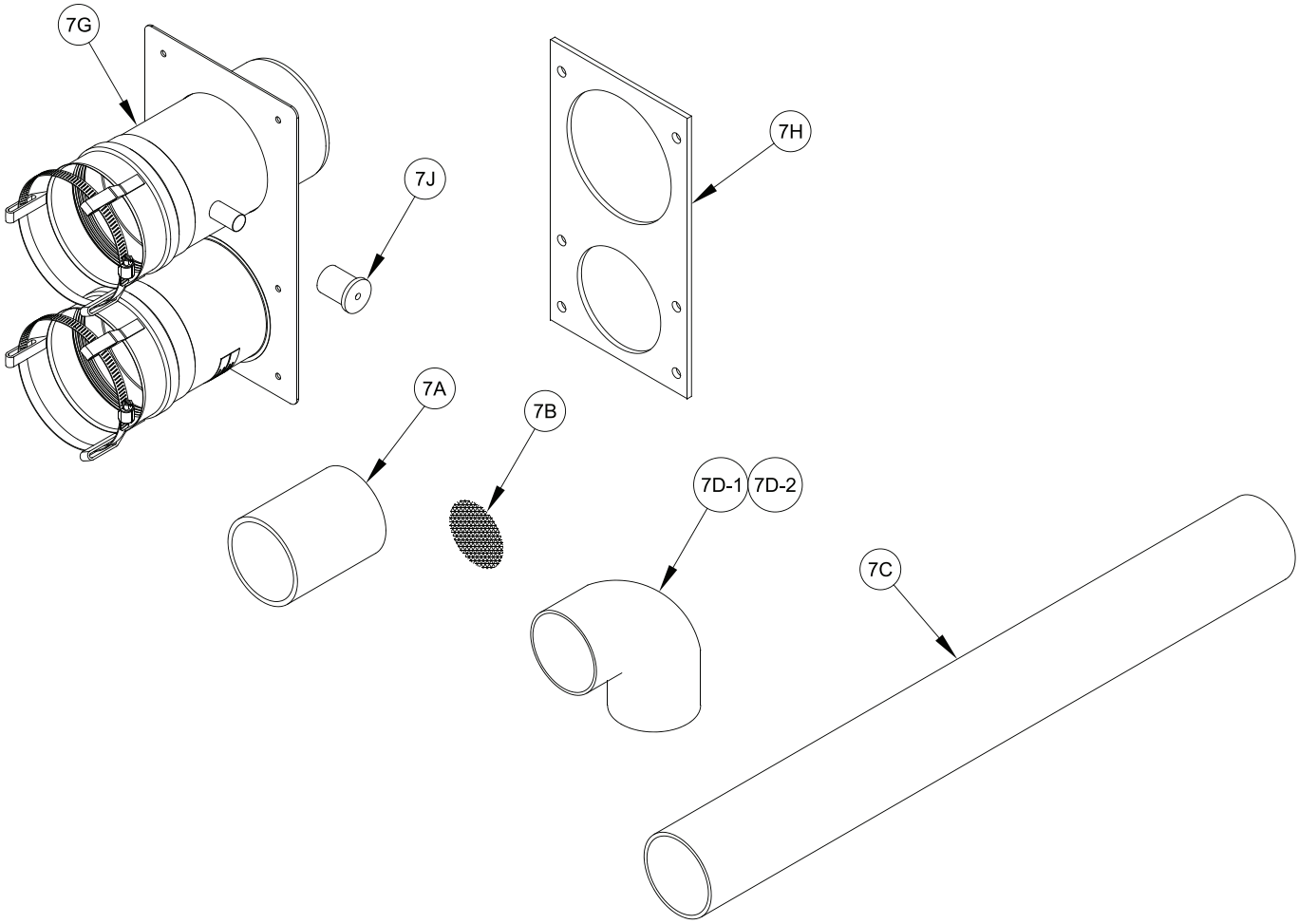

Key No.	Vent System Components	Part Number	Quantity		
			ALP080B & ALP105B	ALP150B & ALP210B	ALP285B
7A	2” Schedule 40 PVC Coupling Vent Terminal	101870-01	1	N/A	
	3” Schedule 40 PVC Coupling Vent Terminal	106680-01	N/A	1	N/A
	4” Schedule 40 PVC Coupling Vent Terminal	106681-01	N/A		1
	2” Stainless Steel Rodent Screens	102191-04	2	N/A	
7B	3” Stainless Steel Rodent Screens	102191-01	N/A	2	N/A
	4” Stainless Steel Rodent Screens	102191-02	N/A		2
7C	3” x 30” Schedule 40 CPVC Pipe	102193-01	N/A	1	N/A
	4” x 30” Schedule 40 CPVC Pipe	102193-02	N/A		1
7D-1	2” Schedule 40 PVC 90° Elbow – Air Intake Terminal	106618-01	1	N/A	
	3” Schedule 40 PVC 90° Elbow – Air Intake Terminal	106678-01	N/A	1	N/A
	4” Schedule 40 PVC 90° Elbow – Air Intake Terminal	106679-01	N/A		1
7D-2	3” Schedule 80 CPVC 90° Elbow	102192-01	N/A	1	N/A
	4” Schedule 80 CPVC 90° Elbow	102192-02	N/A		1
7G	3” x 3” CPVC/PVC Vent System Connector Assembly (with sensor cap and flue sensor)	105133-01	1		N/A
	4” x 4” CPVC/PVC Vent System Connector Assembly (with sensor cap and flue sensor)	105133-03	N/A		1
7H	3” x 4” CPVC/PVC Vent System Connector Gasket	102185-01	1		N/A
	4” x 4” CPVC/PVC Vent System Connector Gasket	102185-02	N/A		1
7J	Replacement Flue Temperature Sensor Cap Kit (includes cap, Molykot 111 grease and instructions)	105197-01	1		
	Flue Temperature Sensor and Cap Replacement Kit (includes sensor, cap, Molykot 111 grease and instructions) - Not Shown	106066-01	1		

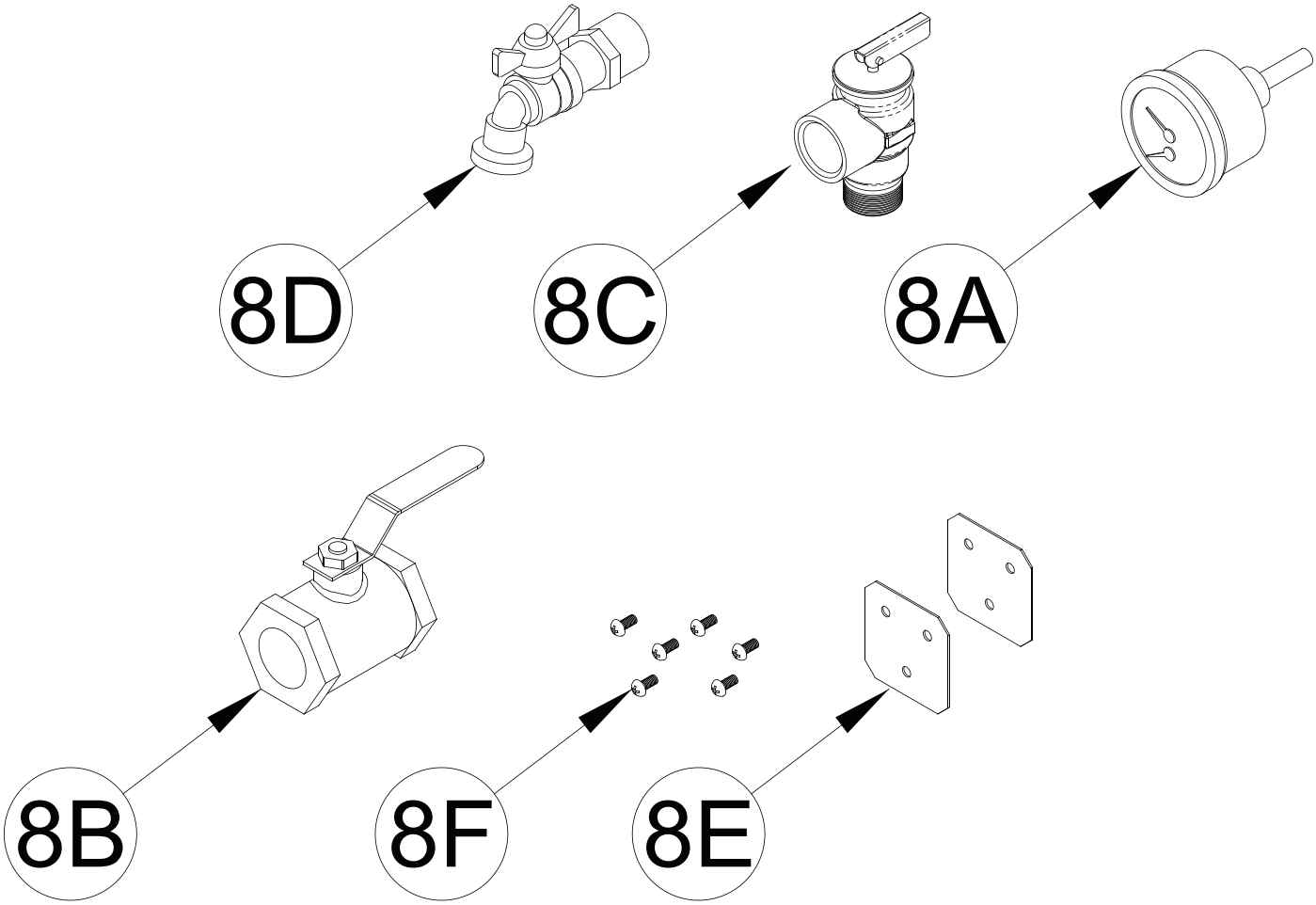

Key No.	Description	Part Number				
		ALP080B	ALP105B	ALP150B	ALP210B	ALP285B
MISCELLANEOUS PARTS CARTON						
8A	Temperature/Pressure Gauge	100282-01				
8B	External Gas Shutoff Valve	806SOL0005				101615-01
8C	Safety Relief Valve	30 PSI: 81660363				30 PSI: 81660319
N/A	Alternate Safety Relief Valve (Not Shown)	50 PSI: 103837-01				
N/A	Alternate Safety Relief Valve Kit (Not Shown, includes safety relief valve and temperature & pressure gauge)	80 PSI: 104200-01 100 PSI: 104201-01				
8D	Boiler Drain Valve, 3/4” NPT	806603061				
8E	Boiler Stacking Brackets - Two (2) pcs per assembly required	101679-01				
8F	Boiler Stacking Bracket Screws - Eight (8) pcs per assembly required	80860743				
	Outdoor Temperature Sensor (Not Shown)	102946-01				

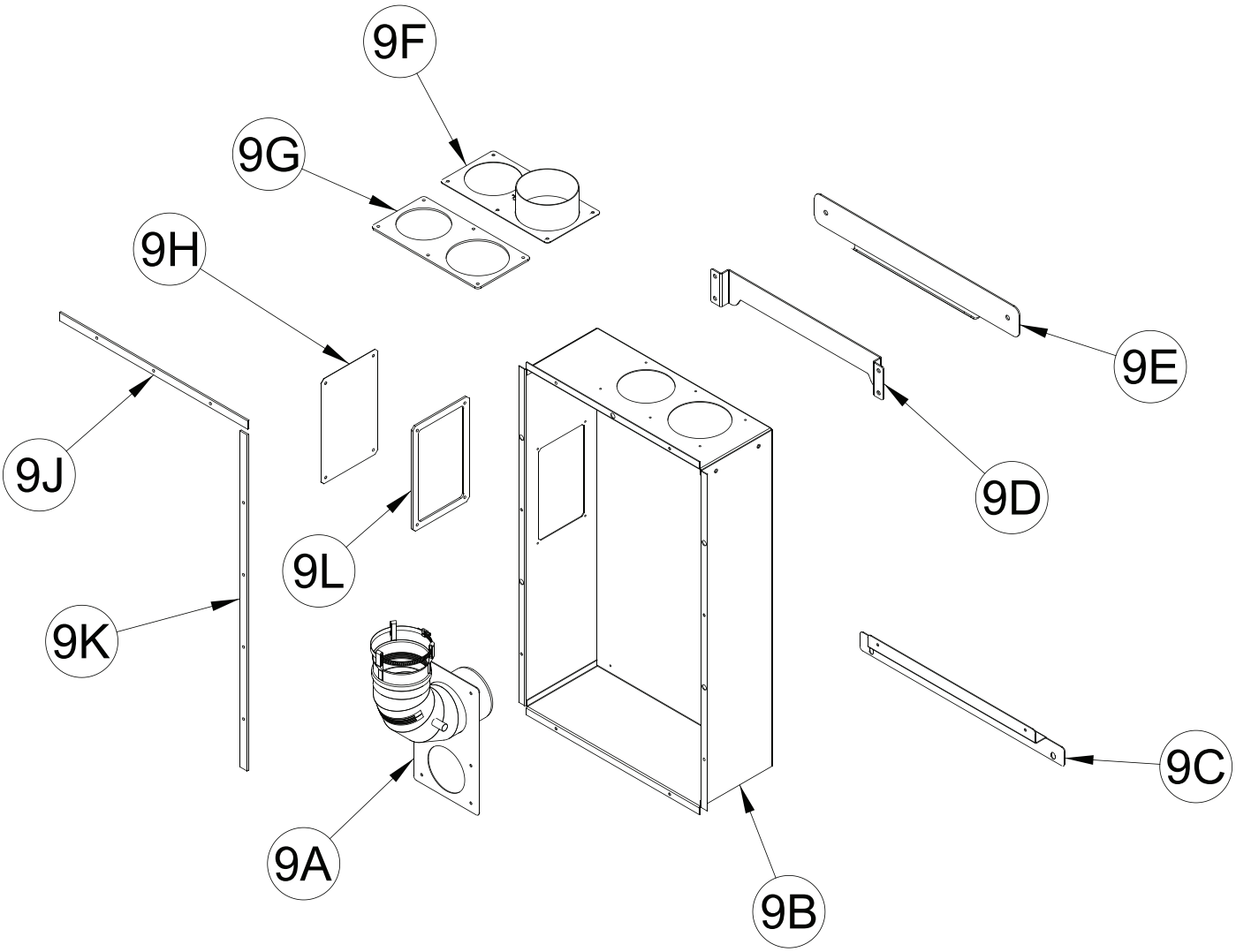

Key No.	Description	Part Number				
		ALP080B	ALP105B	ALP150B	ALP210B	ALP285B
9A	Vent Elbow w/Flue Sensor Port	102878-01				N/A
9B	Rear Air Box	102867-01				N/A
9C	Bottom Securing Bracket	102870-01				N/A
9D	Hanging Bracket, Boiler	102868-01				N/A
9E	Hanging Bracket, Wall	102869-01				N/A
9F	Air Collar Plate Assembly	102871-02				N/A
9G	Air Collar Plate Gasket	102876-01				N/A
9H	Access Panel, Rear Air Box	102873-01				N/A
9J	Horizontal Strip Gasket - Two (2) pcs per assembly required	102875-01				N/A
9K	Vertical Strip Gasket - Two (2) pcs per assembly required	102874-01				N/A
9L	Access Panel Gasket	102877-01				N/A
	1/4-20 x 5/8 Hex Head Cap Screw (Not Shown) - Four (4) pcs per assembly required	80861312				N/A
	1/4-20 Hex Nut w/Lock (Not Shown) - Four (4) pcs per assembly required	80860456				N/A
	Sheet Metal Screw, #8 x 1/2", Black Oxide (Not Shown) - Sixteen (16) pcs per assembly required	80860061				N/A

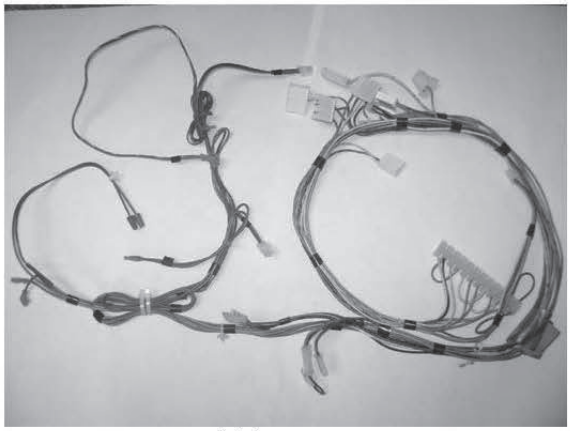

10A

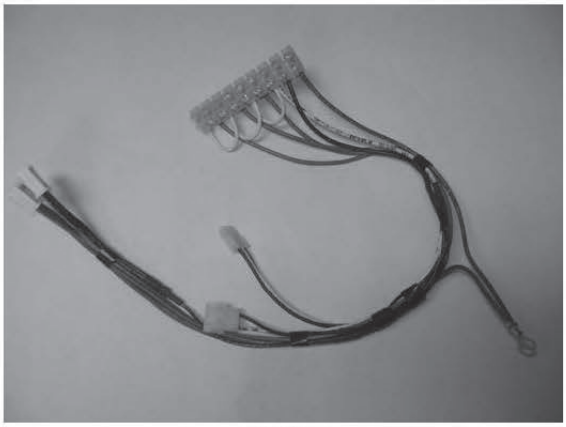

10B

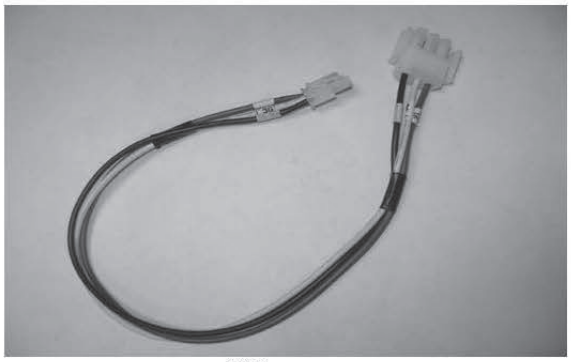

10C

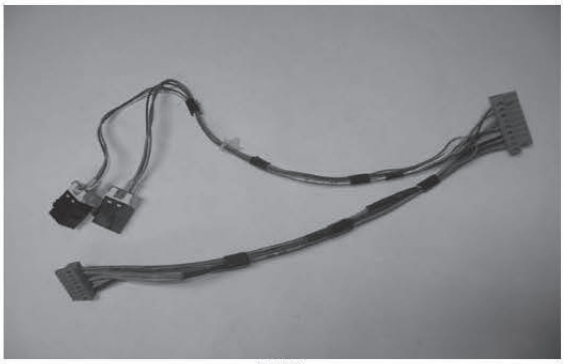

10D

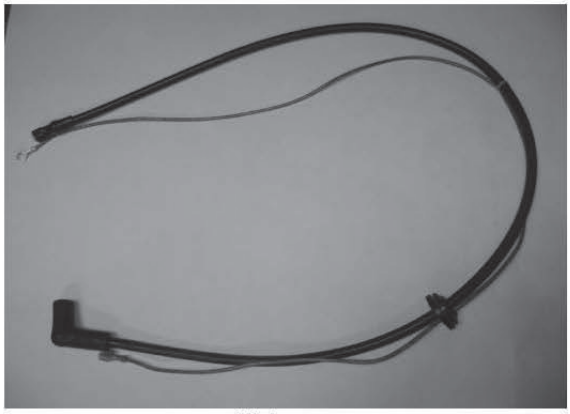

10E

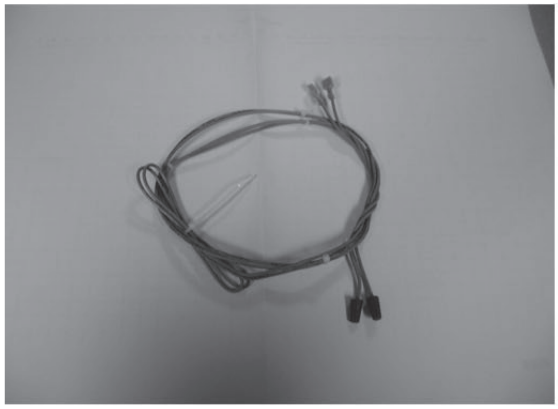

10F

Key No.	Description	Part Number				
		ALP080B	ALP105B	ALP150B	ALP210B	ALP285B
---	Complete Wiring Harness (includes 10A, 10B, 10C & 10D)	102701-03				
10A	Main (Low Voltage) Harness	103009-03				
10B	High Voltage Harness	103010-02				
10C	Blower Power Harness	103012-01				
10D	Communication Harness	103011-01				
10E	Igniter Harness	105752-01				
10F	Wiring Harness, Thermal Link & Burner Door Thermostat	N/A				104574-01

SERVICE RECORD

DATE	SERVICE PERFORMED

SERVICE RECORD

DATE	SERVICE PERFORMED

U.S. Boiler Company, Inc.
P.O. Box 3020
Lancaster, PA 17604
1-888-432-8887
www.usboiler.net