FCC ID: EF9MRS-2500DL

IMAGE SCANNER

MRS-2500DL

Installation & Operations Guide

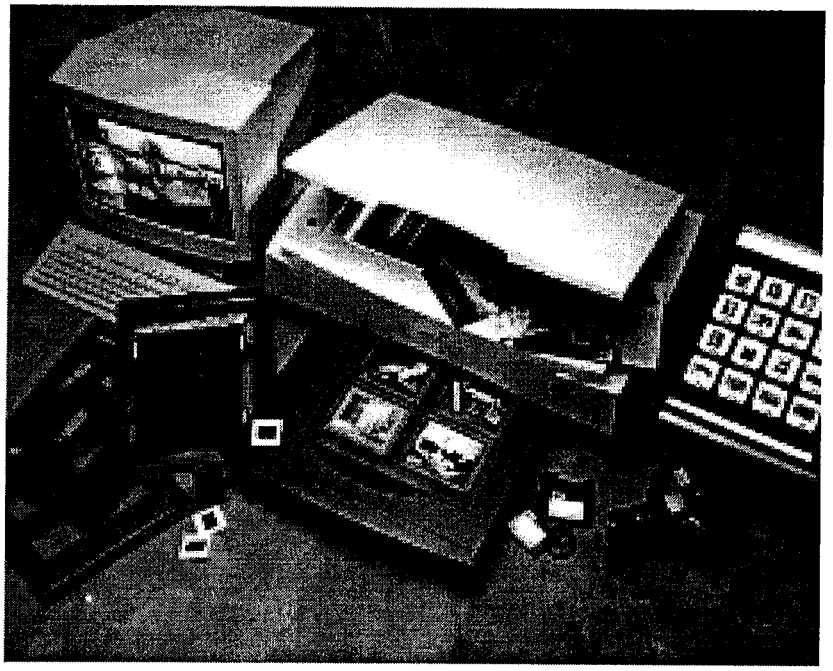

MICROTEK

Better Images Through Innovation

FCC ID: EF9MRS-2500DL

FCC Compliance Statement

This equipment has been tested and found to comply with limits for a Class B digital device, pursuant to Part 15 of the FCC rules. These limits are designed to provide reasonable protection against harmful interference in residential installations. This equipment generates, uses, and can radiate radio frequency energy, and if not installed and used in accordance with the instructions, may cause harmful interference to radio communications. However, there is no guarantee that interference will not occur in a particular installation. If this equipment does cause interference to radio or television equipment reception, which can be determined by turning the equipment off and on, the user is encouraged to try to correct the interference by one or more of the following measures:

-Reorient or relocate the receiving antenna
-Move the equipment away from the receiver
-Plug the equipment into an outlet on a circuit different from that to which the receiver is connected
-Consult the dealer or an experienced radio/television technician for additional suggestions

Only equipment certified to comply with Class B should be attached to this equipment to continuing compliance with FCC emission limit, and must have shielded interface cables.

You are cautioned that any change or modifications to the equipment not expressly approved by the party responsible for compliance could void your authority to operate such equipment.

Contents

1 Introduction 1

2 General Installation 4

1. Unpacking the Scanner 4
2. Unlocking the Carriage 4
3. Resetting the scanner's SCSI ID 5
4. Power-up test 5
   A. Operating Voltage 5
   B. Connecting the Scanner to Power Source 5
   C. Powering up the Scanner 5
   D. Observing the Scanner Boot Process 6
5. Choosing the Scanning Station 6
   Requirements for the Operating Environment 6

3 Installation on the Macintosh 7

A. Installation for Macintosh computers with built-in SCSI ports 7
B. Installation for the new G3 Macintosh computers 8
C. Installing the software 8

4 Installation on Windows 98 / 95 10

1. Installing the interface card 10
2. Checking the interface card status 10
3. Installing the software 11
4. Connecting the scanner 11
5. Termination 12
6. Troubleshooting 12

5 Installation under Windows NT 4.0 16

6 Operating the Scanner 18

1. Positioning reflective materials 18
   A. General scanning 18
   B. Scanning in high resolution 18

2. Positioning transparent film 19
A. Using the Universal Glass Film Holder *20*
B. Using the 35mm Slide Holder *21*
C. Using the 35mm Filmstrip Holder *22*
D. Using the 6 x 9 cm Film Holder *23*
E. Using the 4" x 5" Film Holder *24*

7 Using the Scanner ICC Profiler Program 25
1. Introduction 25
2. Calibration target 25
3. Taking care of the target 25
4. Replacing the target 25
5. Installing the Scanner ICC Profiler 26
A. For the Macintosh *26*
B. For Windows 98 / 95 / NT 4.0 ..... *26*
6. Placing the color target 26
7. Calibration 28
8. Scanning the target image 28
9. Aligning the target registration marks 29
A. Aligning the upper-left registration mark *29*
B. Aligning the upper-right registration mark *29*
C. Aligning the bottom-right registration mark *29*
10. Creating a profile 30
11. Reference Section for Macintosh 31
A. Menu commands *31*
B. The Main Window *32*
C. The Calibration Window: Preview and Scan *33*
D. The Calibration Window: Aligning targets and creating the profile *33*
12. Reference section for PC 34
A. The Main Window *34*
B. The Calibration Window: Preview and Scan *36*
C. The Calibration Window: Aligning targets and creating the profile *36*

1 Introduction

Congratulations on your purchase of the ArtixScan 2500 scanner! The single-pass, 36-bit, high-resolution ArtixScan 2500 is specifically designed and engineered for the discriminating scanner user who demands rich, detailed images suitable for any prepress or multimedia need. This manual will help you in the installation and operation of your scanner. The information provided covers both Macintosh and PC environments for Windows 98 / 95, as well as Windows NT 4.0. See the notes below on how to use the manual, based on the environment in which you operate.

- If you are operating under the Macintosh environment, go to the *General Installation* section of the manual, then proceed to *Installation on the Macintosh*, then go to *Operating the Scanner*.
- If you are operating under Windows 98 or Windows 95, go to the *General Installation* section of the manual, then proceed to *Installation on Windows 98 / Windows 95*, then go to *Operating the Scanner*.
- If you are operating under Windows NT 4.0, go to the *General Installation* section of the manual, then proceed to *Installation on Windows NT 4.0*, then go to *Operating the Scanner*.

The last section of the manual provides information on the Scanner ICC Profiler program, which applies to both Macintosh and PC environments, and shows you how to use the program to ensure the most accurate color for your scanner.

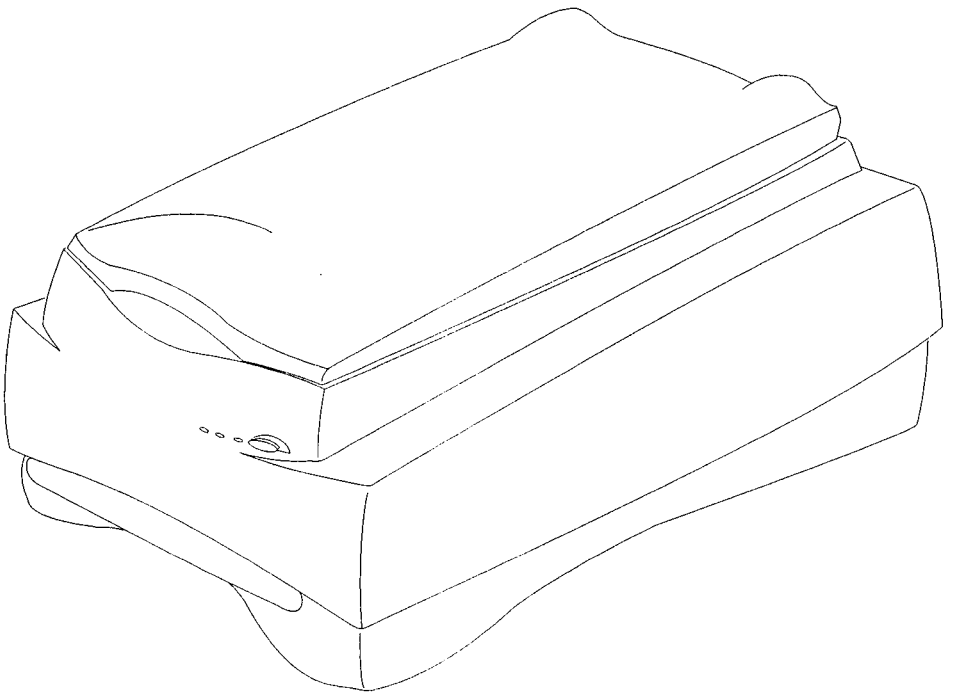

ArtixScan 2500 Scanner

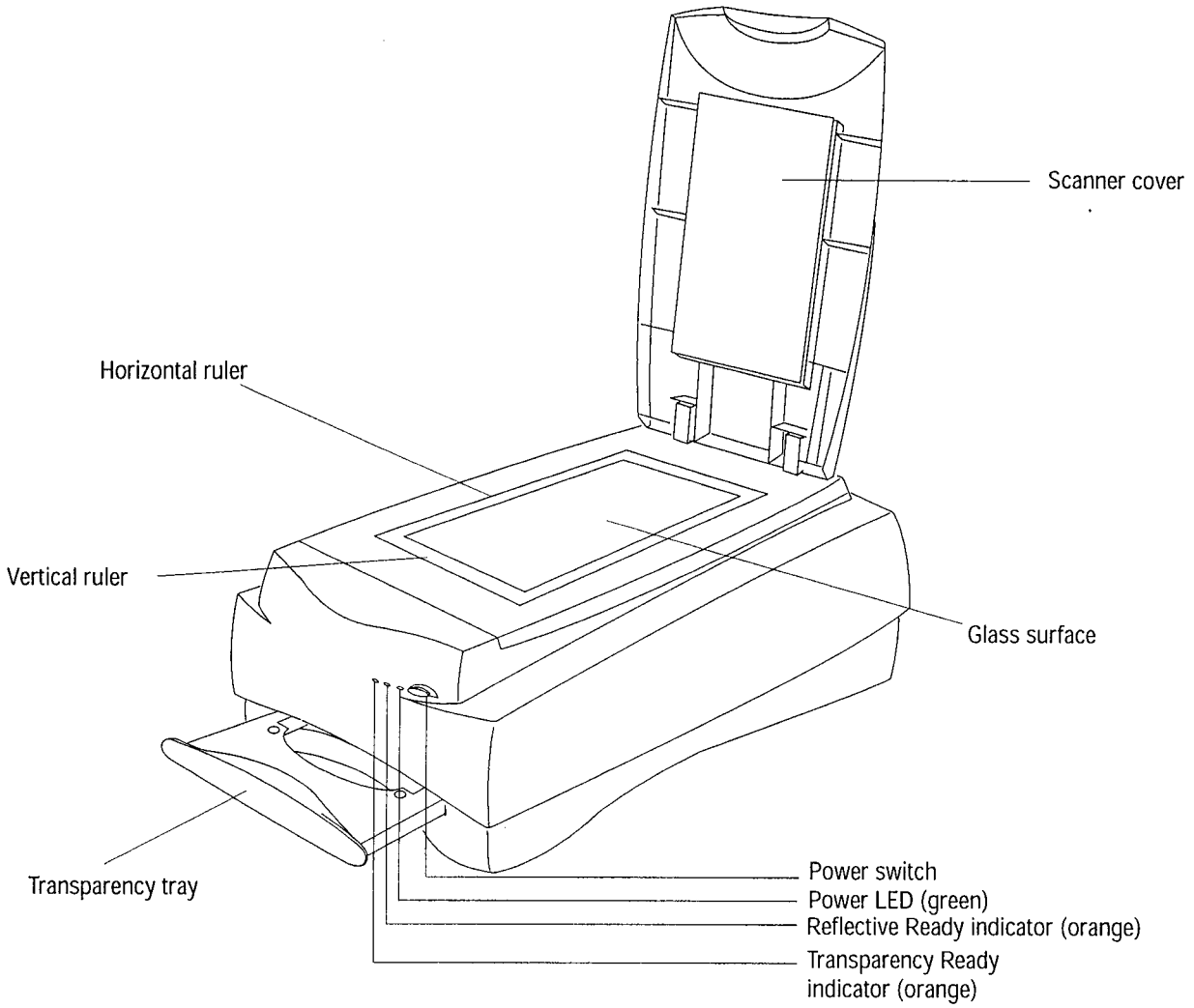
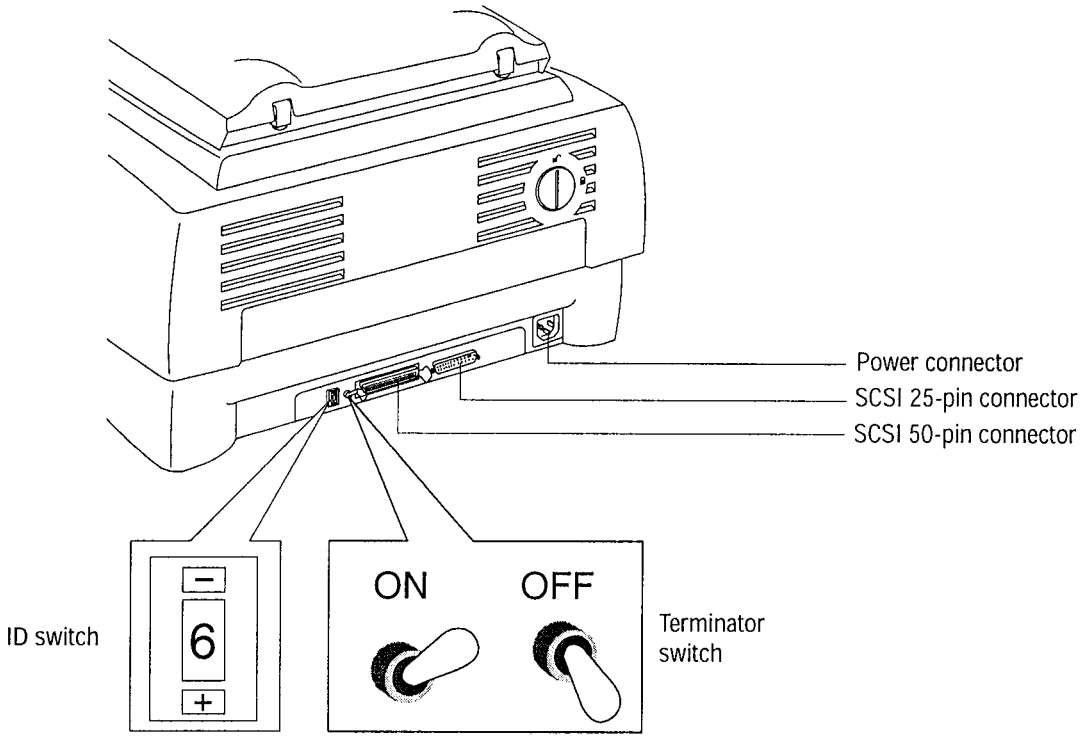
ArtixScan 2500 Scanner