INSTRUCTION MANUAL

A preliminary draft copy of the Users Manual follows:

Motorola GSM 1900

Cellular Telephone User Guide

angelsing.bk Page 1 Thursday, March 30, 2000 4:55 PM

Options Menu

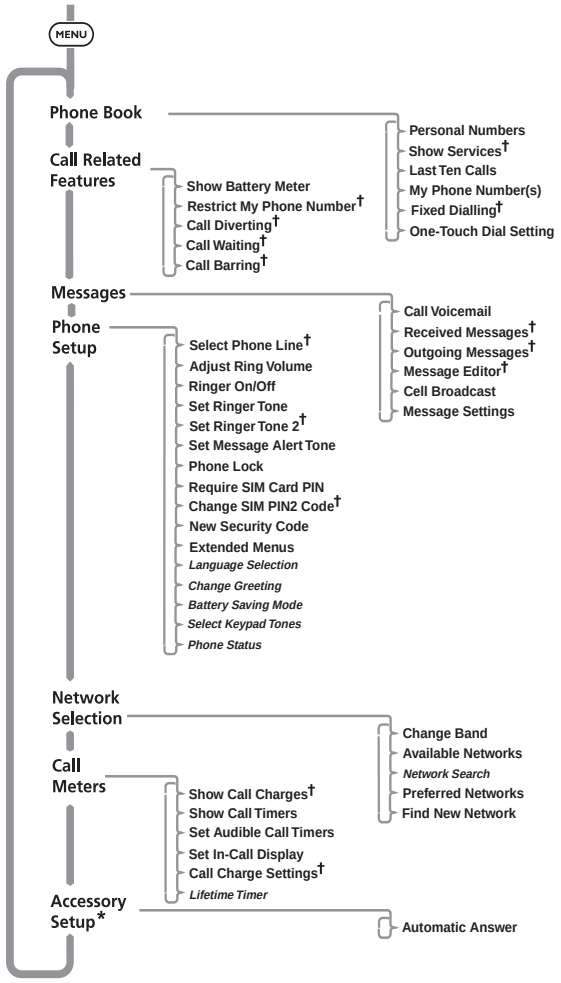

Quick Access‡

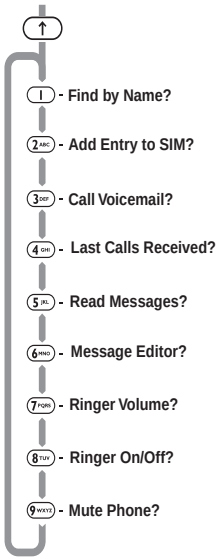

Menu Navigation

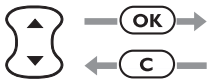

Items shown in ***Italics*** are available only when **Extended Menus** are switched on.

† Availability depends on the type and settings of the SIM card and/or your subscription to these services.

* The **Accessory Setup** option is available only when a car kit or headset is fitted.

‡ The features and the positions of the features in the Quick Access menu can be changed.

Quick Reference

English

angelsing.bk Page 2 Thursday, March 30, 2000 4:55 PM

Quick Reference

English

Special Keys

⊙	Press to turn phone on and off.
OK	Press to accept call, setting, option,...
C	Press to reject call, setting, option,...
↑	Press to enter the Quick Access features.
MENU	Press to access the options or phone book menus.
◂* #▸	Press both simultaneously to lock the keypad; also use to scroll left and right.
	Press to scroll up and down.
✉	Press to call Voicemail.

Making a Call

Enter **Phone No.** OK.

Receiving a Call

Press OK.

Ending a Call

Press OK or C.

Making an Emergency Call

Enter 9wxyz 1 1 OK. The call will be directed to a central emergency operator.

Quick Access Features

Press ↑, scroll to the feature and press OK to select.

Redialing the Last Number Called

1 Press OK to display the last number dialled.

2 Press OK to call the number.

One-Touch Dialing

Press and hold the appropriate digit key 1 to 9wxyz.

Storing Numbers in the Phone Book

Press ↑, scroll to `Add to SIM` and press OK to select.

Dialing Phone Book Numbers

Enter **Location** #▸ OK.

Stopping a Call Alert

Press the volume button when the phone is ringing. This will stop the alert but not answer the call.

angelsing.bk Page 3 Thursday, March 30, 2000 4:55 PM

Introduction

Welcome

Congratulations on your purchase of a mobile phone from *Motorola*, the world leader in cellular technology. The phones are packed with features that put you in control and give you unrivaled power, while remaining discreet.

Control

- Customizable Quick Access Menu ⊙ - *Place nine of your most frequently used features in your own personal menu so that they can be accessed with just two key presses. Icons make each feature easy to identify.*

Discretion

- Wearable Holster - *Wear your phone in a stylish holster on your belt. It is small enough and light enough to keep with you almost anywhere.*

Power

- Superb battery performance –▭+ - *Each phone is capable of several hours conversation or several days standby, but is still small and light.*

! Before you use your phone, please see the 'Your Battery' section for important information on charging a new battery.

Personality™

This cellular telephone incorporates *Personality*™. Unique to *Motorola*, *Personality*™ removes the complexity of cellular communications by guiding you through the features and presenting you with simple choices every step of the way. *Personality*™ also allows you to personalize the way you use your phone - for example, different ringer tones, a phone book and network selection preferences - all presented with clarity and simplicity. In this manual, each of the *Personality*™ features is identified with an OK symbol to indicate that it is customizable to meet your requirements.

angelsing.bk Page 4 Thursday, March 30, 2000 4:55 PM

Understanding this Manual

Many of your phone options are accessed by a simple menu system. A full description of the menus and how to move around them is covered in the next section ***Menu Navigation***. When the manual describes the use of each menu item, it will be assumed that you are familiar with the menu system.

Key Presses

Key presses are represented in this manual using symbols so that you may locate and use the required sequence quickly. A sequence of key presses may be shown as follows:

MENU OK C

This means that you should press the MENU key followed by the OK key and then the C key, in sequence, not simultaneously.

angelsing.bk Page 5 Thursday, March 30, 2000 4:55 PM

Entering Information

When you are requested to enter information, such as the number of the phone you wish to call, this is represented in **bold** type. For example:

Phone No. - enter the required telephone number.

PIN Code - enter your Personal Identification Number.

Unlock Code - enter your unlock code.

Location - enter the Phone Book location number.

Prompts and Messages

Your phone responds to key presses by displaying either easy to understand prompts that guide you to the next action, or simple messages confirming that your action is complete. Prompts and messages are represented in this manual in LCD style, for example:

`Enter PIN` or `Completed`.

Other Symbols

You will find the following symbols used throughout this manual:

☞ *A Note contains additional information which is relevant to the feature/item.*

! *A Caution contains important additional information which is relevant to the efficient and/or safe usage of your phone.*

OK This symbol indicates that the feature is a *Personality*™ feature that can be customized to meet your requirements.

This symbol indicates a short key sequence for the feature.

Menu Navigation

A large number of your phone's options are accessed by using menus which use a common approach for selection, change and cancellation.

Please read this section carefully before attempting to access a menu option. When you understand the common approach to menu navigation and how the menus are shown on the page, you will be able to access and change options with ease.

Entering the Menus

Two different keys are used to access the menus:

MENU enters the Options menu while in standby mode; enters the In-call menu during a call.

↑ enters the Quick Access menu.

Once entered, the menus use the ⌂, ◄✱, #►, OK and C keys in a common manner to access, select and change individual options.

Leaving the Menus

To leave any of the menus, you can either press and hold the C key or repeatedly press the C key. Both of these actions will return your phone to the standby mode.

Alternatively, a quicker way to leave the menus is to press ↑ C.

Menus and Sub-menus

A menu is a list of options. Some of these options provide access to a further list of options called a sub-menu. When navigating through the menus you may find it is helpful to think in terms of menu levels—the 'parent' menu being on one level and its sub-menus being on a lower level.

angelsing.bk Page 9 Thursday, March 30, 2000 4:55 PM

Moving To and Selecting a Menu Option

To move from one option to another on the same level, use the scroll keys: the key scrolls forwards and the key scrolls backwards. When you find the option you want, press the (OK) key to select it.

Depending on the option you select, one of three things will happen:

- either a brief message will be displayed confirming an action, for example `Completed`.
- or a prompt will be displayed requesting you to enter information, for example `Enter PIN` or `Enter Name`.
- or the first option of a sub-menu will be displayed. You can select this option using the (OK) key or browse through the other options using the scroll keys.

To leave an option or sub-menu, press the (C) key. This will take you back to the parent menu item.

Menu Options with Security Codes

Some options are protected from misuse by requiring you to enter one of the security codes. To use these options, you must enter the requested code before proceeding.

Menu Navigation - A Working Example

The following steps will take you through how to switch the Extended Menus option on:

1. When the phone is in the standby mode, press the (MENU) key. This will access the Options menu and Phone Book will be displayed.
2. Press the key repeatedly until the Phone Setup sub-menu item is shown in the display.
3. Press the (OK) key to select the sub-menu.
4. Press the key repeatedly until the Extended Menus sub-menu item is shown in the display.
5. Press the (OK) key to select this item. You can now select between On or Off, the current setting will be shown with a character. If the character is next to Off, press and then (OK) to switch on the Extended Menus. If the character is next to On, press (C) to leave the setting as it is.

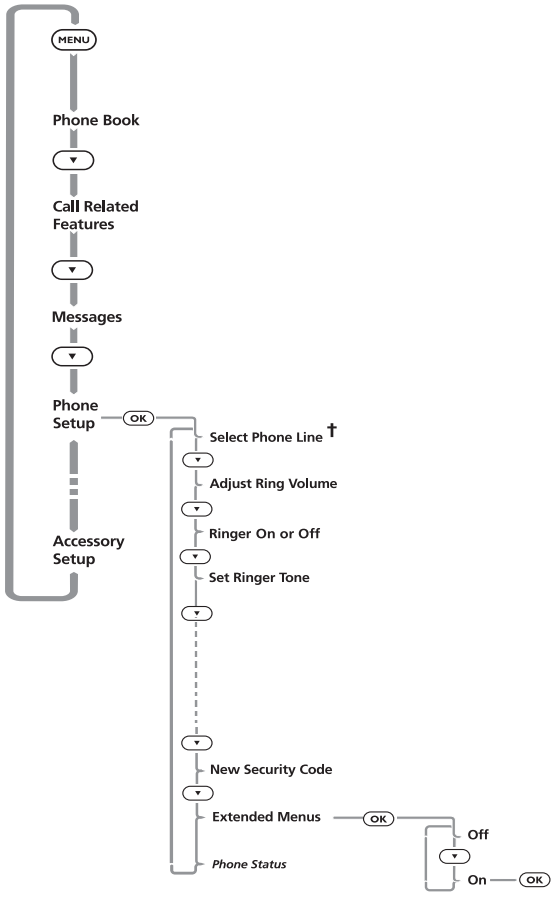

angelsing.bk Page 11 Thursday, March 30, 2000 4:55 PM

OK *Short, Extended and Personalized Menus*

With *Personality*™ you can personalize the menus by choosing which features you want readily available. The features that are less frequently used can be stored out of sight.

The menu diagrams in this manual show the condition of the menu settings when you first receive your phone. Some features are in the Short Menu and are shown in **bold** type. Other features are in the Extended Menu and appear in *italics*.

You can change which features appear in the Short and Extended Menus, and therefore personalize the menus, to suit your requirements.

If you want to move a feature from the Short Menu to the Extended Menu (or from the Extended Menu to the Short Menu), go to the feature and then hold down the (OK) key until a prompt appears offering the following choices:

- Add the current feature to the Short Menu/Extended Menu.
- Leave the current feature in the Short/Extended Menu.

Select the option you want by pressing the (OK) key.

The settings for some menu features cannot be changed.

Total Customer Satisfaction

At Motorola, Total Customer Satisfaction is a top priority. If you have a question, a suggestion or a concern about your Motorola Cellular Phone, Motorola wants to hear from you.

Motorola
Personal Communications Sector
600 North US Highway 45
Libertyville, Illinois 60048

1-800-331-6456 (in the United States)
1-888-390-6546 (TTY access for U.S. only)
1-800-461-4575 (in Canada)

http://commerce.motorola.com/consumer

angelsing.bk Page 13 Thursday, March 30, 2000 4:55 PM

Contents

Safety

Important information for the efficient and safe operation of your phone 15

About Your Phone, Battery and SIM Card

Introduces your phone, explains how to charge and maintain batteries, explains about your SIM Card 19

Making and Receiving Phone Calls

Explains how to make single or conference calls, how to redial, how to transfer a call, and how to end a call 27

Using The Options Menu

Provides an explanation of the Options Menu and how to use it 37

Using the Quick Access Menu

Provides an explanation of the Quick Access Menu and how to use it 69

Accessories

Details the accessories available for use with your phone 73

What To Do If...

Helps you to solve any problems that may occur 75

Index

A comprehensive Index .....

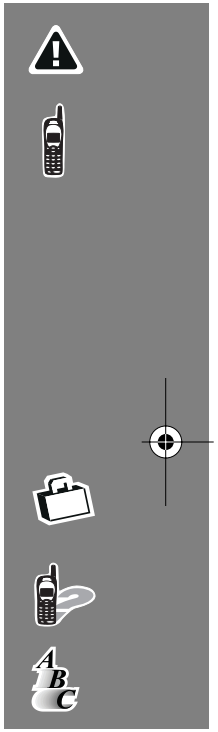

angelsing.bk Page 14 Thursday, March 30, 2000 4:55 PM

Safety

IMPORTANT: Read this information before using your wireless handheld phone.

Exposure to Radio Frequency Signals

Your wireless handheld portable telephone is a low power radio transmitter and receiver. When it is ON, it receives and also sends out radio frequency (RF) signals.

In August 1996, The Federal Communications Commission (FCC) adopted RF exposure guidelines with safety levels for handheld wireless phones. Those guidelines are consistent with safety standards previously set by both U.S. and international standards bodies:

- American National Standards Institute (ANSI) IEEE. C95. 1-1992
- National Council on Radiation Protection and Measurement (NCRP). Report 86
- International Commission on Non-Ionizing Radiation Protection (ICNIRP) 1996
- Ministry of Health (Canada), Safety Code 6

Those standards were based on comprehensive and periodic evaluations of the relevant scientific literature. For example, over 120 scientists, engineers, and physicians from universities, government health agencies, and industry reviewed the available body of research to develop the ANSI Standard (C95.1).

The design of your phone complies with the FCC guidelines (and those standards). For additional information concerning exposure to radio frequency signals, see the statement by the FDA at the end of this user guide.

To maintain compliance with FCC RF exposure guidelines, if you wear a handset on your body, use the Motorola-supplied or approved carrying case, holster, or other body-worn accessory. If you do not use a body-worn accessory, ensure the antenna is at least one inch (2.5 centimeters) from your body when transmitting. Use of non-Motorola accessories may violate FCC RF exposure guidelines.

Antenna Care

Use only the supplied or an approved replacement antenna. Unauthorized antennas, modifications, or attachments could damage the phone and may violate FCC regulations.

Phone Operation

Normal Operation

Hold the phone as you would any other telephone, with the antenna pointed up and over your shoulder.

Tips on Efficient Operation

Observe the following guidelines to operate your phone most efficiently.

- Extend your antenna fully, if applicable.
- Do not touch the antenna unnecessarily when the phone is in use. Contact with the antenna affects call quality and may cause the phone to operate at a higher power level than otherwise needed.

Batteries

Caution: All batteries can cause property damage, injury, or burns if a conductive material, such as jewelry, keys or beaded chains, touches exposed terminals. The material may complete an electrical circuit and become quite hot. To protect against such unwanted current drain, exercise care in handling any charged battery, particularly when placing it inside your pocket, purse, or other container with metal objects. When the battery is detached from the phone, your batteries are packed with a protective battery cover; please use this cover for storing your batteries when not in use.

Driving

Check the laws and regulations on the use of wireless telephones in the areas where you drive. Always obey them. Observe the following guidelines when using your phone while driving.

- Give full attention to driving--driving safely is your first responsibility.
- Use hands-free phone operation, if available.
- Pull off the road and park before making or answering a call if driving conditions so require.

Electronic Devices

Most modern electronic equipment is shielded from RF signals. However, certain equipment may not be shielded against the RF signals from your wirelessphone.

Pacemakers

The Health Industry Manufacturers Association recommends that a minimum separation of six inches (6") be maintained between a handheld wireless phone and a pacemaker to avoid potential interference with the pacemaker. These recommendations are consistent with the independent research by and recommendations of Wireless Technology Research.

Persons with pacemakers:

- should ALWAYS keep the phone more than six inches from their pacemaker when the phone is turned ON
- should not carry the phone in a breast pocket
- should use the ear opposite the pacemaker to minimize the potential for interference
- should turn the phone OFF immediately if you have any reason to suspect that interference is taking place

Hearing Aids

Some digital wireless phones may interfere with some hearing aids. In the event of such interference, you may want to consult your hearing aid manufacturer to discuss alternatives.

Other Medical Devices

If you use any other personal medical device, consult the manufacturer of your device to determine if it is adequately shielded from external RF energy. Your physician may be able to assist you in obtaining this information.

Turn your phone OFF in health care facilities when any regulations posted in these areas instruct you to do so. Hospitals or health care facilities may be using equipment that could be sensitive to external RF energy.

Vehicles

RF signals may affect improperly installed or inadequately shielded electronic systems in motor vehicles. Check with the manufacturer or its representative regarding your vehicle. You should also consult the manufacturer of any equipment that has been added to your vehicle.

Posted Facilities

Turn your phone OFF in any facility where posted notices so require.

Aircraft

Switch OFF your phone before boarding an aircraft.

Airline regulations prohibit using your phone while in the air. Check and comply with the policy of your airline regarding the use of your phone while the aircraft is on the ground.

Blasting Areas

To avoid interfering with blasting operations, turn your phone OFF when in a "blasting area" or in areas posted: "Turn off two-way radio." Obey all signs and instructions.

Potentially Explosive Atmospheres

Turn your phone OFF, do not remove your battery when you are in any area with a potentially explosive atmosphere, and obey all signs and instructions. Sparks from your battery in such areas could cause an explosion or fire resulting in bodily injury or even death.

Areas with a potentially explosive atmosphere are often but not always clearly marked. They include: fueling areas such as gasoline stations; below deck on boats; fuel or chemical transfer or storage facilities; areas where fuel odors are present (for example, if a gas/propane leak occurs in a car or home); areas where the air contains chemicals or particles, such as grain, dust, or metal powders; and any other area where you normally would be advised to turn off your vehicle engine.

For Vehicles Equipped with an Air Bag

An air bag inflates with great force. Do NOT place objects, including both installed or portable wireless equipment, in the area over the air bag or in the air bag deployment area. If in-vehicle wireless equipment is improperly installed and the air bag inflates, serious injury could result.

US021600

angelsing.bk Page 18 Thursday, March 30, 2000 4:55 PM

angelsing.bk Page 19 Thursday, March 30, 2000 4:55 PM

About Your Phone, Battery and SIM Card

Special Keys

⏻	Turns the phone on and off.
OK	Accept call, setting, option.
C	Reject call, setting, option.
↑	Enter the Quick Access menu.
MENU	Press to access the Options and Phone Book menus.
* #	Press both simultaneously to lock the keypad; also use to scroll left and right.
⇕	Press to scroll up and down.
✉	Press to call Voicemail.

☞ *The shape of the keys that appear in the manual may vary slightly from those on the phone.*

Volume Buttons

The Volume buttons (🔊↑ 🔊↓) are on the keypad of your phone. The buttons are used for adjusting the keypad, earpiece and ringer volume. A volume meter will display the current volume setting. The meter will disappear after a short time, or if you press OK or C.

- To adjust the keypad and earpiece volume, press the buttons with no other features selected.
- To adjust the ringer volume, first select the 'Adjust Ring Volume' option in the Phone Setup Menu and then use the buttons to set the required volume.

☞ *If you receive a call and you do not want to answer it immediately, you can press the volume buttons to stop the phone from ringing. This will not answer the call.*

The Display

The display on your phone can show alphanumeric characters as well as useful information symbols. The various elements of the display are as follows:

ABC123	Characters are used to display messages and telephone numbers.
	Signal Strength. The more segments displayed in the bar graph, the better the signal strength.
	In Use. Displayed when a call is in progress.
	Home Zone. Availability depends on your service provider.
▲	**Roam.** Displayed when you are registered on a system other than your home system.
	Ringer On. Displayed when the call ringer is selected. If you select the No Ring option, this symbol will be displayed with a line through it.
	Short Message Service. Displayed when the phone has received a message. The symbol will flash when your message storage area is full.
	Voicemail Waiting Indicator. Displayed when you have a voice message waiting. The availability of this feature depends on your service provider.
	Battery Charge Indicator. The more segments displayed, the greater the battery charge.
→	Indicates that a menu item is currently selected.

In addition, when you are expected to press the OK key, a prompt will appear in the display, for example `Completed`.

Low Temperature Use

The liquid crystal display used in your phone will behave differently at extremely low temperatures. You may notice that the display responds slowly to key presses; this is to be expected and does not affect the phone operation in any way.

Earpiece Connector

The earpiece connector is on the right-hand side of your phone, below the main power socket. Use this connector for the headset accessories available from your *Motorola* dealer.

Looking After Your Phone

- Never leave your phone or battery in extreme temperatures (over 60˚C), for example behind glass in very hot, direct sunlight.
- To clean your phone, use a moistened or antistatic cloth. Do **not** use a dry or electrostatically charged cloth.

Your Battery

Installing the Battery Pack

A new battery is supplied uncharged and fitted within a protective battery carrier. To remove the battery, press the release catch on the battery carrier and open the cover.

To install the battery in your phone:

1 Press the release catch of the phone battery cover and slide the battery cover towards the bottom of the phone.

2 Align the positive and negative (+ and -) connections on the battery with the positive and negative (+ and -) connections within the phone.

3 Press the battery towards the connections and push it downwards until it clicks into place.

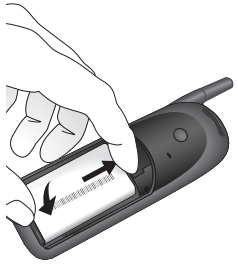

4 Replace the phone battery cover.

Important Battery Information

Always treat your battery with care. See 'Batteries', at the beginning of this manual.

Never leave your battery in extremely high temperatures (over 140˚F, (60˚C)), for example behind glass in very hot, direct sunlight.

Only Motorola Original Accessory batteries can be charged in the phone. This is to protect you and your phone from the risks of incorrect charging.

Charging a New Battery

New batteries are supplied in a totally uncharged state.

To ensure maximum battery performance, a new battery (or battery that has not been used for several months) should be charged for at least 14 hours before use.

A new battery will require several full charge/ discharge cycles in order to achieve its optimum performance.

A new battery, or a battery that has not been used for several months, may cause a premature fully charged indication. Ignore this indication and let the battery charge for several more hours, remove and re-insert the battery into the charger, and charge for an additional 14 hours.

Your battery will not charge if they are not matched properly to the phone connection markings (+ and -). Please ensure that you have installed the battery properly before initiating a charge.

To ensure that you enjoy maximum battery life and use your battery to its fullest capacity:

- The battery should be at or near room temperature when charging.

Battery Performance and Maintenance

- Best battery performance will be achieved when you regularly charge and discharge batteries as instructed in this manual.
- Battery performance is greatly affected by network coverage.
- Set `Battery Saving Mode` to On (see 'Phone Setup Menu') and/or `Frequency of Search` to Slow or Medium (see 'Network Selection Menu').
- If left unused, a fully charged battery will discharge itself in approximately one month.
- When not in use, store your battery uncharged in a cool, dark and dry place.

Removing Your Battery

Switch off your phone before removing battery. Failure to do so may damage your phone memory.

1. Press the release catch of the phone battery cover and slide the battery cover towards the bottom of the phone.
2. Remove the battery.

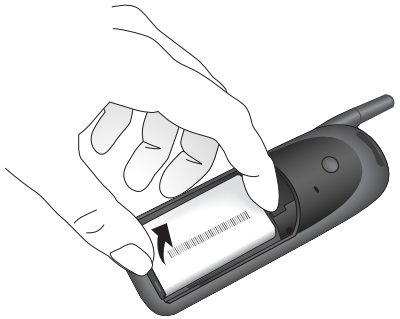

Charging Your Battery Using the Travel Charger

☞ *Depending on the state of the battery, a phone call may not be supported during charging. If the battery is low or nearly depleted, it is recommended that you allow the battery to charge before placing or receiving a call.*

The travel charger can power the phone and charge a fitted battery. You cannot power the phone without a battery.

❗ ***Ensure that the local mains voltage at your location matches that of your travel charger.***

Install the battery into your phone (see 'Installing the Batteries').

To charge your battery:

1 Ensure that your battery is installed properly.

☞ *Charging will not occur if battery is not installed properly, or if the charger is not fully inserted.*

2 Connect the travel charger to the phone.

3 Insert the travel charger plug into a suitable power outlet.

The phone can be charged in the powered on or powered off positions. When the phone is powered on a beep-tone is heard and the battery icon flashes when charging begins. When the phone is powered off `Charging Battery` is displayed and the battery icon flashes when charging begins.

☞ *When you begin a charge it is recommended that the phone is fully powered on or powered off before inserting the charger.*

☞ *The beep-tone on the phone will not occur if the batteries are installed improperly. The beep-tone may take two minutes to occur with new or fully drained batteries.*

The state of charging is monitored and displayed by your phone. See 'Battery Meter Indicators' later in this section for details.

Low Battery Warning

When the battery level is low and only a few minutes of talk time remain, a warning signal (two double beeps) will sound, and `Low Battery` will be displayed.

When the battery is completely discharged, your phone will turn off.

Battery Indicators

Your phone monitors and displays information about your battery. The following message will appear on the display, as the condition occurs:

`Low Battery`	The battery charge is low. The battery should be recharged.

Battery Meter Indicators

The battery meter displays different messages depending on the batteries attached, and whether or not there is an external power source. The battery meter is found in the Call Related Features part of the Options Menu.

`Charging Battery`	The battery is being charged.
`Charging Complete`	Charging is complete.

☞*When the battery* is *completely discharged, you must charge the battery for one minute or longer before you can make or accept a phone call.*

☞*For optimal charging do not disconnect the charger until* `Charging Complete` *is displayed on the phone.*

Your SIM Card

Your SIM (Subscriber Identity Module) card was supplied by your Cellular Service Provider when you bought your phone. You will not be able to make or receive calls if you do not have a SIM card inserted in your phone.

☞ *Some networks allow you to make emergency calls without a SIM card inserted.*

The SIM card is a 'Smart Card' that contains your phone number, service details and memory for storing Phone Book numbers and messages. You can therefore use your SIM card in someone else's GSM phone and you will be charged for the call.

Like a bank or credit card, you should keep your SIM card secure. Do not bend or scratch your card and avoid exposure to static electricity or water.

! *Switch off your phone before inserting or removing the SIM card. Failure to do so may damage the memory on your SIM card.*

SIM Card Insertion/Removal

1 Switch off your phone by pressing and holding the ⏻ key.

2 Remove the battery cover and the battery.

3 Slide the SIM cover down and lift up the cover.

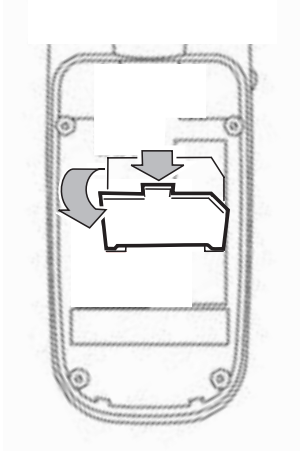

4 If necessary, remove the SIM card from the recess in the base of the phone.

5 Place the SIM card into the recess in the base of the phone so that the notch is at the top right corner.

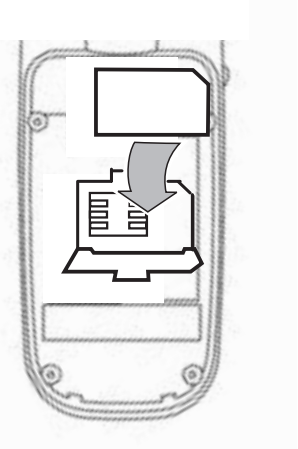

6 Replace the SIM cover, then press and slide it to up to lock it into place.

7 Replace the battery and battery cover.

If the SIM card is inserted the wrong way around, or damaged, the `Check Card` message may be displayed. Remove the SIM card, check that it is the right way around and then re-insert it into the phone.

If either of the `Bad Card See Supplier` or `Blocked See Supplier` messages are displayed, then you will need to contact your Cellular Service Provider.

Making and Receiving Phone Calls

Switching the Phone On and Off

To switch the phone on or off, press and hold the ⊙ key. If you switch the phone on and there is no SIM card inserted, you will be asked to insert one. Once inserted, the phone will check that the SIM card is valid.

A number of messages will then be displayed:

- `Enter PIN` - a request to enter the SIM card PIN code (if required).
- `Enter Phone Unlock Code` - a request to enter the phone unlock code (if required).
- `Searching...` followed by a network name - as the phone searches and then finds a suitable network to connect to.

Entering Your SIM Card PIN Code

To enter the PIN code, enter **PIN Code** OK.

As you type in each digit of the PIN code a * character will be displayed.

If you make a mistake, press and release the C key to remove the last digit. Holding the C key down will remove the entire entry.

When the PIN code is complete press the OK key.

If the PIN code entered is incorrect, the warning message `Wrong PIN` will be displayed, followed by `Enter PIN`.

If the PIN number is entered incorrectly three times in a row, your phone will automatically lock-up and the `Blocked` ***message will be displayed. See 'Unblocking Your Phone' for details on unblocking your phone.***

The PIN code can be changed, see 'Change SIM PIN Code' in the ***Phone Setup Menu*** section for more details.

Entering Your Unlock Code

If your phone displays the message `Enter Phone Unlock Code` you must enter your unlocking code by entering **Unlock Code** OK.

The unlock code is a four digit number which is set by the manufacturer to **1234**. The code can be changed, see 'Change Unlock Code' in the ***Phone Setup Menu*** section for more details.

If you forget your unlock code, press the MENU key. This will display the 'Change Unlock Code' option. Enter OK **Security Code**, enter a new unlock code, and press OK.

Locking the Keypad

Press the ◂* and #▸ keys simultaneously to prevent accidental usage of the phone. To remove the lock, press ◂* and #▸ simultaneously. All keys with the exception of the ⊙ key will be disabled. You can still answer an incoming call by pressing OK when the keypad is locked.

angelsing.bk Page 28 Thursday, March 30, 2000 4:55 PM

Making a Phone Call

To make a phone call, your phone must be switched on and unlocked.

It will not be possible to make a phone call unless you are in an area where there is a GSM1900 service. When a service has been found, a series of rising bars, ▂▃▅▇, will show the signal strength.

There are a number of different ways to make a phone call:

- Using the digit keys.
- Using automatic redial.
- Redialing the last number called.
- One-touch dialing a Phone Book entry*.
- Dialing a Phone Book entry*.
- Calling an embedded number in a message.

☞ **Your phone contains a 'phone book' that can be used to store names and telephone numbers. See 'What is the Phone Book?' for further details.*

The easiest method of making a phone call is to enter the number using the digit keys then press (OK).

☞ *If you make a mistake, press and release the (C) key to remove the last digit. Holding the (C) key down will remove the entire number.*

Your phone will then attempt to make the phone call. The display will show `Calling` to show the call attempt is being made. If the call is not answered, pressing (OK) at this point will end the attempt.

When the phone call is answered, the display will change to `Connected` for a few seconds, followed by `End Call?`.

To end your call, press (OK).

Automatic Redial

If your call attempt does not succeed, the message `Redial?` will be displayed for five seconds. Pressing (OK) at this point will automatically redial the phone number.

When the call is answered, you will hear a short ring tone.

The maximum number of redial attempts is set by your Cellular Service Provider. If the phone call cannot be connected within this maximum, the message `Redial Failed` will be shown.

Redialing the Last Number Called

When in standby mode, press (OK)(OK).

Alternatively, you can retrieve the last number dialed using the 'Last Ten Calls' feature in the Phone Book menu.

OK One-Touch Dialing Phone Book Numbers

To quickly retrieve and dial a number stored in the first nine locations of your Phone Book[1], press and hold the appropriate digit key. For example, pressing and holding (2ABC) will dial the phone number stored in location 2 of your Phone Book.

☞ *You do not need to press (OK) to call the number.*

1. *The Phone Book entries that you are able to access will depend on the One-Touch Dial Setting option in the Phone Book menu.*

OK Dialing Phone Book Numbers

Alternatively, enter the phone book [Location] number followed by (#▸)(OK).

Calling an Embedded Number in a Message

Details on how to call a number embedded in a message are given in the ***Messages Menu*** section.

International Phone Calls

To make an international phone call press and hold the (0+) key. After a couple of seconds the international dialing prefix + will appear in the display, this allows you to call from any country without knowing the local international access code.

Now enter the country code, followed by the phone number. The country code follows the conventional format, 49 for Germany, 44 for the UK, 46 for Sweden, etc.

Just like a conventional international call, remove the leading '0' of the area code when you dial.

Inserting Pauses Into Phone Numbers

To obtain a three second 'pause' character in a phone number, press and hold the (*) key for a couple of seconds, the pause symbol Ü will appear.

The pause character produces a three second delay whenever it is used. However, the first pause character in a phone number is a special case, it will not begin its delay until the call is answered.

Pause - A Working Example.

If, for example, you have a tone-based voicemail system on 555-6911, with a mailbox number 1066 and password 2001. Then you may dial the following number:

`5556911Ü1066Ü2001`(OK).

The first part of the number would be used to call the voicemail system.

When the call is answered the first pause will produce a delay of three seconds before the tones for `1066` are sent to select the mailbox.

There will be a second pause of three seconds before the tones for `2001` are sent as the password.

Emergency Calls

When you dial 911, your phone will automatically send an emergency message to your PCS network. Keep in mind that you must be within PCS network coverage area. If allowed by your service provider, the emergency message can be sent with or without a Sim card inserted into the phone and regardless of any seurity code settings.

Please check with your network operator for further information regarding emergency dialing services.

To dial the PCS emergency number press (9wxyz)(1)(1)(OK).

When the emergency call is being made and connected, the display will show emergency.

You may also be able to dial 112, the international emergency number, to place emergency calls.

Receiving a Phone Call

To receive a phone call:

- Your phone must be switched on and unlocked.
- You must be in an area where there is GSM1900 service.
- Your Call Forwarding and Call Barring settings should not be set to forward or bar incoming calls.

When your phone receives a call, it will ring and the display will show the `Call` message (if you have Caller Line Identification, the caller's number or name will be displayed instead).

To answer the call, press (OK).

If you do not wish to answer a call you can either:

Press and release the (C) key. If you have enabled the 'Detailed Forwarding - If Busy' or 'Forward when unavailable' options in the Options Menu, the caller will be forwarded to the forwarding number, otherwise the caller will hear the busy tone.

or

Press and hold the (C) key. This will reject the incoming call. No call forward option will be offered.

If your phone rings and you do not answer it, the message `Unanswered Call` will be displayed to show you that a call attempt was received.

Ending a Phone Call

To end a phone call, press (OK) or (C).

In-Call Menu

The "In-Call" menu provides access to additional functionality during a call.

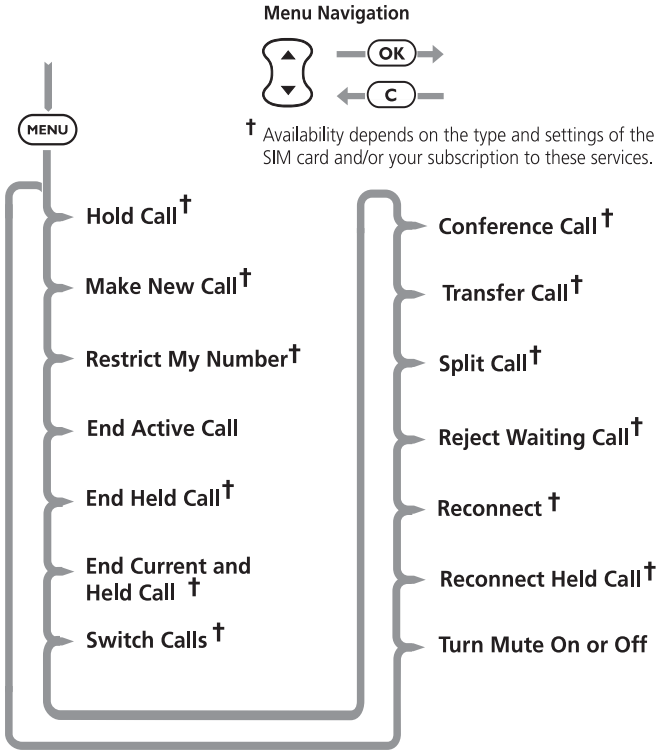

Entering the In-Call Menu

The "In-Call" menu is accessed by pressing the MENU key during a call.

Leaving the In-Call Menu

To leave the "In-Call" menu press the C key.

In-Call Menu Options

The options listed in the "In-Call" menu will dynamically change depending on the current call state. The following list contains all of the possible options in the "In-Call" menu.

Only some of the options will appear at any given time. The order of the options may vary.

Hold Call

This option will put the active call on hold.

Make a New Call

This option allows you to make another call.

Restrict My Number

This option allows you to make a call without the remote user getting advanced warning of the number.

End Active Call

This option terminates the active call, and makes the call that was previously on hold, the active call.

End Held Call

This option will terminate a held call.

End Current And Held Call

This option will terminate all connected calls.

Switch Calls

This option allows you to switch between the active call and the call that is on hold.

Conference Call

This option connects you with up to five other telephones on one call (see 'Making a Conference Call').

Transfer Call

This option transfers a call to another telephone (see 'Transfer Call' later in this section).

Split Call

This option allows you to separate an individual from the main Conference Call.

Reject Waiting Call

This option will reject a waiting call.

Reconnect

This option will make the call on hold the active call.

Reconnect Held Call

This option is similar to `Reconnect` but will appear if you have a call on hold, and a call waiting. `Reconnect Held Call` will make the call on hold the active call.

Turn Mute On or Off

Temporarily turns the microphone off during a phone call. Reselect this option to resume your conversation.

OK *Call Holding and Call Waiting*

Your phone supports the GSM options of Call Holding and Call Waiting. Using these options you can place a current phone call on hold and accept an incoming call or start a second call (See '***Call Waiting***' in the '***Call Related Features***' menu for details of how to control this feature).

Call Holding and Call Waiting Scenarios

The display will automatically change according to the status of your current call (or calls) and will propose the option that you are most likely to want. Press (OK) to accept this option or press (MENU) and then ⇕ to scroll through the "In-Call" menu for the alternative options. By following this procedure you will find that even the triple combination of an active call, a held call, and a call waiting is easy to manage.

The following points summarize the more common situations:

- To put an active call on hold, press (MENU), the display will show `Hold Call Select?` - press (OK) to put the call on hold. To reconnect the call, press (OK).
- To put an active call on hold and make another call, first put the active call on hold, then press (MENU) and select the `Make New Call` option[1].
- To switch between an active call and a held call press (OK) at the `Two Calls Switch?` prompt.
- To accept a waiting call during an active call, press (OK) at the `Call Waiting Answer?` prompt. The active call will be placed on hold. If you prefer to end the active call before accepting the waiting call, press (MENU) and select the `End Active Call` option.
- To reject a waiting call, press (MENU) and select the `Reject Call Waiting` option (or simply press the (C) key).

☞ *If you have an active call, a call on hold and a call waiting, you cannot accept the waiting call until you end either the active call or the held call, or join the active and held calls.*

Call Holding and Call Waiting Messages

During Call Holding and/or Call Waiting operations, your phone may display one or more of the following messages:

`Trying`

A request to hold the active call, swap the active with a held call, or add a member to a Conference Call, has been made.

or

A request to reconnect the held call has been made.

☞ *If you are in the process of placing a call on hold and* `Trying` *appears in the display, you need to press (OK) to resume the current call. If you press (C) when you are trying to place a call on hold, it will end the current call.*

`Hold Failed`

The request to hold a call has been unsuccessful.

`Cannot Hold Second Call`

A call is already on hold, you cannot place two calls on hold at the same time.

1. *A quicker method of making another call is to enter the number to be called directly and press (OK). Your phone will place the current call on hold and attempt to call the number entered.*

`Connection Failed`

The held call could not be made active again.

`Busy Try Later`

Your phone is still working on a previous command. Wait a short time before repeating the command.

`Anonymous`

The person who is calling you has blocked their number from appearing on your phone.

`Unavailable`

The network is unable to provide the caller's number.

`Conference Unsuccessful`

The request for Conference Call has been unsuccessful.

`Transferring Call`

A request to transfer a call has been made.

`Transfer Unsuccessful`

The request to transfer a call has been unsuccessful.

angelsing.bk Page 35 Thursday, March 30, 2000 4:55 PM

Making a Conference Call

This option joins the active call with a held call. With Conference Call, you can have a conference with up to five other telephones. At any time during your call, you can add, disconnect or separate individuals from the Conference Call using other "In-Call" menu options.

You must subscribe to both Conference Call and Call Waiting Supplementary Services to be able to use this feature.

Initiating a Conference Call

To initiate a Conference Call, place the active call on hold, and dial another phone number. You will then have one active call and one call on hold.

Press the (MENU) key to enter the "In-Call" menu and select `Conference Call`. The currently active call and the call on hold will then join into one Conference Call.

Managing a Conference Call

While in a Conference Call, you will have the option to add new calls to the Conference Call or separate one of the members from the Conference Call.

Adding a New Call

There are a number of different ways to add new calls to the Conference Call:

- Using the digit keys.
- Using the `Make New Call` option from the "In-Call" menu.
- Recalling a Phone Book Entry using Quick Access.
- Answer Call Waiting.

No matter which method is chosen to add a new call, the original Conference Call will be first placed on hold while the new call is being connected. You must then enter the "In-Call" menu and select `Conference Call` to join the New Call with the original Conference Call in progress.

Separate One of the Members in the Conference

During a Conference Call, you will also have the option to separate a selected member from the main Conference Call.

In order to separate a member from the main Conference Call, there must not be any calls on hold.

Press (MENU) during a Conference Call and select `Split Call`. You will then be presented with the phone number or name of all members of the Conference Call. Use the scroll keys to find the selected member of the Conference Call. Once the desired member is selected, press the (OK) key and select `Split Call`.

At this point, the selected call will be separated from the main Conference Call and private conversation between you and the selected member is possible.

To re-join all the parties again, select `Conference Call` from the "In-Call" menu.

Transfer Call

Transfer Call transfers a call to another telephone. There are two ways to transfer a call; *before* or *after* the third party is connected.

You must subscribe to both Conference Call and Call Waiting Supplementary Services to be able to use this feature.

Initiating Transfer Call Before the Third Party is Connected

To transfer a call to another telephone, press the (MENU) key and select `Transfer Call` from the "In-Call" menu. Enter the number where the call will be transferred and press (OK).

Your phone will then attempt to transfer the call. The display will show `Transferring Call` followed by `Call Transferred`. When the call has been successfully transferred, you will be disconnected automatically.

Initiating Transfer Call After the Third Party is Connected

If you already have an active call and a call on hold, press the (MENU) key and select `Transfer Call` from the "In-Call" menu. Your phone will then attempt to transfer the active call to the call on hold. The display will show `Transferring Call` followed by `Call Transferred`. Once the call has been successfully transferred, you will be disconnected automatically.

Using the Options Menu

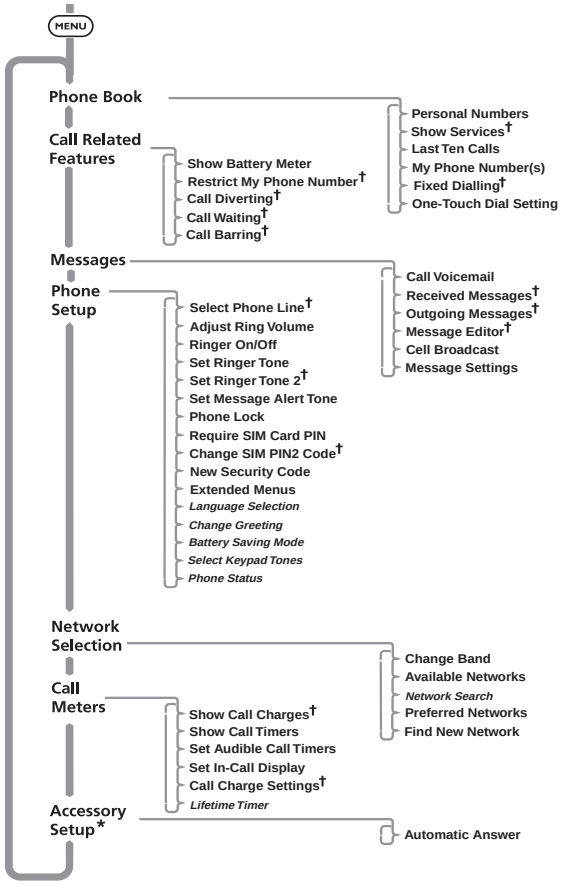

Menu Navigation

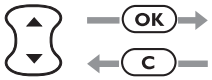

Items shown in ***Italics*** are available only when **Extended Menus** are switched on.

† Availability depends on the type and settings of the SIM card and/or your subscription to these services.

* The **Accessory Setup** option is available only when a car kit or headset is fitted.

The Phone Book Menu

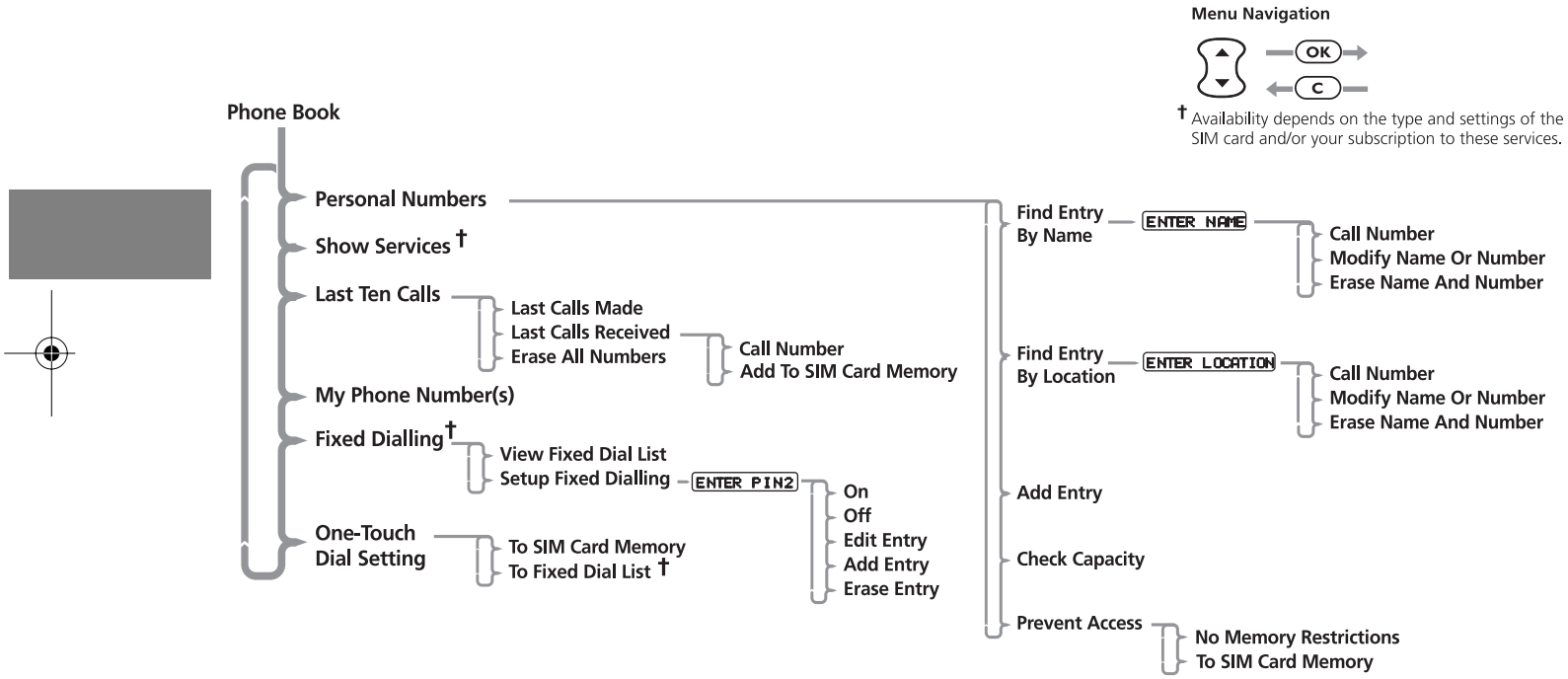

angelsing.bk Page 39 Thursday, March 30, 2000 4:55 PM

Using the Phone Book Menu

You can store names and telephone numbers as entries in the *Personal Numbers list* and in the *Fixed Dial list* on your SIM card.

The amount of *Personal Numbers* entries will vary depending upon the type of SIM card issued by your Cellular Service Provider.

You can also store up to 40 entries in a Fixed Dialing list if you have this feature. Fixed Dialing allows you to limit use of your phone to particular numbers.

Each Phone Book entry comprises:

- A phone number - up to 20 digits*.
- A name - up to 50 characters* but typically 10 or less.
- A location label - from 1 to 255* in your Personal Numbers list, or 1 to 40* in your Fixed Dial list.

** Dependent on SIM card.*

How to Enter Alphabetic Characters

The 0 +, 1 ,... ...,8 TUV and 9 WXYZ keys are used to enter alphabetic characters, for example when storing names in the Phone Book or when creating messages.

For example, if you press the 5 JKL key, the first displayed character will be J. If this is not the required character, then you can press the same key again to show K. Another press will display L, another... ...will display 5. Your phone will continue to scroll through the characters available on the selected key with each new key press.

A long press of any of the keys will switch all the characters to lower case, a second long press will switch back to upper case.

To enter the next character press the appropriate key. If, however, the next character is on the same key as the previous character you will first need to press the # key. Pressing the # key a second time will produce a space.

If a mistake has been made, you can go back to the incorrect character by pressing *.

Characters can be removed from the display by pressing the C key.

The character before the cursor (ö) is the character which will be deleted.

Press the OK key to store the information.

Available Characters

Press the appropriate keys to get the following characters:

1	Space . 1 ? ! , Ÿ Ä & : " ( ) ' ` @ % ¡ ¢ Space . 1 ? ! , Ÿ Ä & : " ( ) ' ` @ % ¡ ¢
2 ABC	A B C 2 [® ± © a b c 2 { ¯ ± ©
3 DEF	D E F 3 ¿ ¤ d e f 3 ¥ ¤
4 GHI	G H I 4 À § g h i 4 À §
5 JKL	J K L 5 Á j k l 5 Á
6 MNO	M N O 6] \ « ¨ µ m n o 6 } | ¬ ¨ µ
7 PQRS	P Q R S 7 Â ¸ p q r s 7 Â ¸
8 TUV	T U V 8 ^ t u v 8 ~
9 WXYZ	W X Y Z 9 º · w x y z 9 º ·
0 +	+ - 0 x * / = > < # + - 0 x * / = > < #

The top line for each key shows the upper case characters, the lower line shows the lower case.

Personal Numbers

The Personal Numbers sub-menu is used for creating and managing your list of personal numbers.

Find Entry By Name

This option is used to select a telephone number from a list of alphabetically sorted Phone Book names.

Once selected, this option will display the message `Enter Name`. You can enter a maximum of three characters from a name but you do not need to enter all three characters to begin a search.

The Phone Book entries will be searched and the first alphabetically matching entry will be displayed.

If there isn't a name matching your entry, the nearest alphabetically matching entry will be displayed.

If you do not enter any name information, the first alphabetical entry will be displayed.

If there are no names stored, `No Names Stored` will be displayed.

To display adjacent Phone Book entries, use the ⟲ key. When the desired name is displayed press the OK key to select it. The phone enters the options sub-menu for `Find Entry By Name`. See 'The Options for 'Find Entry By ...".

Find Entry By Location

Location #

This option is used to select a telephone number from a list of numerically sorted Phone Book locations.

Once selected, this option will display the message `Enter Location`. You can now enter a location number. If the entered location is not valid, a timed message `Range 1-XXX` will be displayed and the phone will return to the `Enter Location` menu item.

The Phone Book entries will be searched and an entry will be displayed.

If you enter a location number for which there is no entry, `Location Empty` will be displayed and the nearest non-empty location will be selected instead.

If you did not enter a location, the first numerical entry will be displayed.

If there are no numbers stored, `No Numbers Stored` will be displayed.

To display adjacent Phone Book entries, use the key. When the desired name is displayed press the OK key to select it. The phone then enters the options sub-menu for `Find Entry By Location`. See 'The Options for 'Find Entry By ...''

The Options for 'Find Entry By ...'

Once a Phone Book entry has been selected, it can be called, modified or deleted.

Call Number

This option is used to call the selected Phone Book telephone number.

Modify Name or Number

This option is used to change the selected Phone Book entry.

The entry's current telephone number and name will be presented, in turn, for modification. You can accept the current settings or modify as required.

Erase Name and Number

This option is used to erase the selected Phone Book entry.

Simply press the OK key when the phone displays the message `Erase Name And Number`. The option will display the timed message `Erased XXX` and then return to the `Find Entry` menu item.

Add Entry

Press . Select the Quick Access feature (Add to SIM?).

This option is used to add (store) entries to the SIM Card.

angelsing.bk Page 42 Thursday, March 30, 2000 4:55 PM

Check Capacity

This option is used to check the number of free entries in the SIM card memory area.

Prevent Access

This option enables you to prevent access to the Personal Numbers list.

To SIM Card Memory, No Memory Restrictions

You can prevent access to all entries in the SIM card memory. To cancel all access restrictions use the No Memory Restrictions option.

When you change the restrictions, you will be requested to enter the Security Code before the change is made.

Show Services

This option displays a list of phone numbers and services provided by your Cellular Service Provider.

☞ *Availability depends on the type and settings of the SIM card, and/or your subscription to this feature.*

Last Ten Calls

These options allow you to review your most recently used phone numbers. Depending on the option you choose, you can then redial a phone number, store a phone number in your phone book, or erase all of the phone numbers.

After you select an option, use the ⦚ key to scroll through the list of phone numbers. Press the (OK) key to proceed.

Last Calls Made

Select this option to redial the phone number of any one of the last ten calls made.

Last Calls Received

Press ⊕. Select the Quick Access feature (Received Calls?).

Select this option to redial the phone number of any one of the last ten calls received. You can store any of the phone numbers in your phone book.

You will only see numbers in the Last Calls Received list if you have Caller Line Identification.

You may need to add this option to your Quick Access menu in order to access it.

When you scroll through your last ten calls, each call appears with a call position number, for example:1+, 2-, 3+ ... 10+. A + symbol indicates that you answered the call. A - symbol indicates that you did not answer the call.

Press the OK key to select a phone number. You can then scroll through and select one of the following options:

Call Number

Select this option to call the phone number.

Add to SIM Card Memory

Select this option to add the phone number details (including any details you have added) to your SIM card memory. If the name in the received call does not appear in your phone book, the phone prompts you to `Enter Name` and `Enter Location`. For further details, see 'Add Entry' in this section.

Erase All Numbers

This option erases all the numbers stored in your Last Ten Calls Made and Last Ten Calls Received lists.

The Last Ten Calls lists will be erased when a new SIM is inserted in the phone.

My Phone Number(s)

This option allows you to access your cellular phone numbers so that you can retrieve or modify them when required. For example, if you have difficulty remembering your cellular phone number, store it with the name `My Phone` and then you will be able to retrieve the number as required.

The My Phone Number(s) list is stored on your SIM card.

When you select this item, the first location will be displayed. Use the key to scroll through the phone numbers stored.

To enter or change a number, scroll to the location and press OK. You will be prompted to enter a phone number and then a name. Press OK to store the information.

Depending on your Cellular Service Provider, you may find that one or more of the entries in the My Phone Number(s) list will have been defined. You may not be able to change these predefined entries.

This option is also used as your account number for accessing the mobile internet.

Fixed Dialing

☞ *Availability of the Fixed Dialing menu depends on the type of SIM card.*

This feature allows you to limit use (typically third-party use) of your phone to a predefined list of telephone numbers or, if you wish, to a list of country codes, area codes, or other prefixes of your choosing.

When Fixed Dialing is switched on, the only numbers that can be dialed from your phone are those stored (or whose prefix is stored) in the Fixed Dial list. If you attempt to dial any other number (apart from an emergency number), the message `Restricted` will be displayed.

To make a call when Fixed Dialing is switched on, either dial the number manually, or select it from the Fixed Dial list and press (OK).

Up to 40 entries can be stored in the Fixed Dial list. The list is stored on your SIM card.

❗ ***This option may be affected by the Call Barring setting.***

View Fixed Dial List

This option allows you to scroll through the numbers in the Fixed Dial list. When you find the number you want, press (OK) to make the call.

Setup Fixed Dialing

This option allows you to switch Fixed Dialing on or off and to enter or change entries in the Fixed Dial list.

You will be prompted to enter your PIN2 security code when you select this option.

On

Switches fixed dialing on.

Off

Switches fixed dialing off.

Edit Entry

Modifies or clears an entry in the Fixed Dial list. When you select this option, the first non-empty location in the list will be displayed. Scroll to the entry you want to change and press (OK). You will be prompted to edit the phone number and the name. To erase the entry, press (C).

Add Entry

Adds a phone number and name to the Fixed Dial list. When you select this option you will be prompted to enter the phone number, name and a location number. If you do not specify a location number, it will be stored in the next available location.

☞ *When setting up your Fixed Dial list, you may want to reserve the first nine locations for phone numbers you wish to One-Touch Dial. See also 'One-Touch Dial Setting'.*

Erase Entry

Erases a phone number and name from the Fixed Dial list. The first entry in the Fixed Dial list will be displayed. Scroll to the entry you wish to delete and press (OK).

One-Touch Dial Setting

This option allows you to specify which Phone Book list can be One-Touch Dialed.

To SIM Card Memory

Switches One-Touch Dialing to your Personal Numbers list stored on your SIM card (locations 101 to 109).

To Fixed Dial list

☞*This option is only available if you have Fixed Dialing.*

Switches One-Touch Dialing to your Fixed Dial list (locations 1 to 9).

Call Related Features Menu

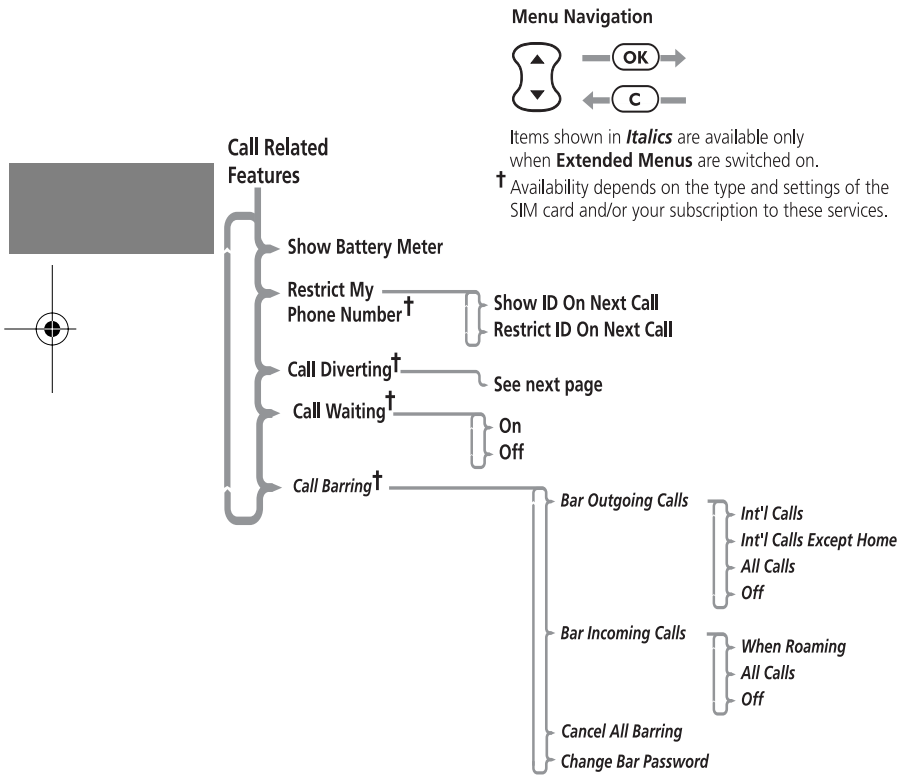

Show Battery Meter

This option displays the approximate amount of battery capacity remaining, for example:

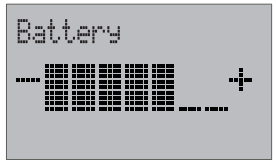

Number of Segments	Approximate Charge Level
1	less than 5% (recharging needed)
3	less than 20%
5	less than 60%
7	greater than 60%

Press ⊙. Select the Quick Access feature (Battery Meter?).

Restrict My Phone Number

'Restrict My Phone Number' is a network feature. You will need to subscribe to one of the two Caller Line Identification restriction features with your Cellular Service Provider.

Show ID on Next Call

Your phone number is sent with the next attempted call, after this your phone number will not be sent until you re-select this option.

Restrict ID on Next Call

Your phone number will not be sent with the next attempted call, after this your phone number will be sent with calls until you re-select this option.

OK *Call Forwarding*

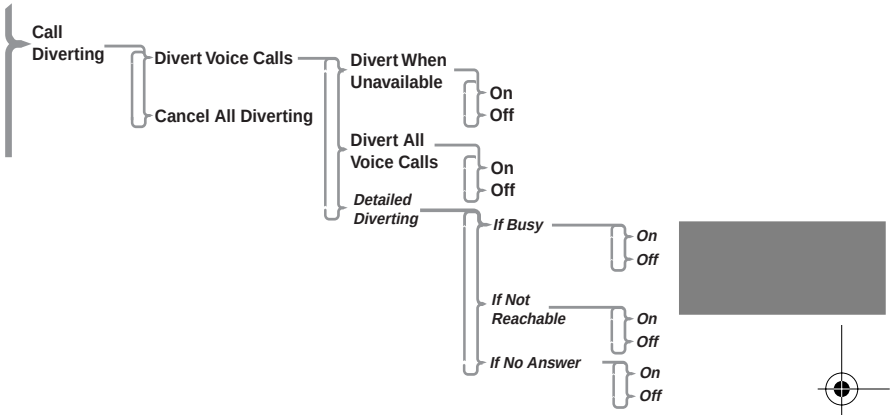

Call forwarding is a network feature. If your phone is unavailable, or you do not wish to receive calls, incoming calls can be forwarded to other phone numbers.

This option can be used to:

- Forward all incoming Voice calls unconditionally.
- Forward incoming Voice calls whenever your phone is unavailable, busy, not reachable or not answered.
- Reset all forward options to off.

☞ *You cannot change the call forward settings when you are out of network coverage.*

After selecting any of the call forward options there will be a short delay while the phone asks the network for the current setting.

Forward Voice Calls

This option will allow you to set your phone to *Forward When Unavailable*, *Forward All Voice Calls* or *Detailed Forwarding*.

Forward When Unavailable

This option will enable you to forward all incoming Voice calls to a single number, whenever your phone is unavailable.

The option has two settings, `On` or `Off`.

If you change the setting to `On`, you will be asked to enter a forward phone number using the digit keys.

☞ *Setting "Forward When Unavailable" to On will have the same effect as setting all "Detailed Forwarding" options to On.*

☞ *When* `On`*, Forward When Unavailable takes priority over detailed forward settings.*

Forward All Voice Calls

This option will enable you to *unconditionally* forward all incoming Voice calls to a single number.

The option has two settings, `On` or `Off`.

If you change the setting to `On`, you will be asked to enter a forward phone number using the digit keys.

☞ *When* `On`*, Forward All Voice Calls takes priority over all other Voice call forward settings.*

Detailed Forwarding

These options will enable you to forward Voice calls to different numbers, depending upon the current status of your phone.

Each of the following detailed forwarding options operate in the same way.

Each option has two settings, `On` or `Off`.

If you change the setting to `On`, you will be asked to enter a forward phone number using the digit keys.

☞ *Detailed forward settings are ignored while Forward All Voice Calls or Forward When Unavailable are* `On`*.*

`If Busy`

This option will forward incoming calls if your phone is busy.

`If Not Reachable`

This option will forward incoming calls if your phone cannot be contacted by the network.

`If No Answer`

This option will forward incoming calls if you do not answer the call.

OK Call Waiting

The Call Waiting menu item has two settings `On` or `Off`. If you select `Off`, you will be not be notified of waiting calls. The person trying to contact you will either receive the busy tone, or be forwarded by the '`Detailed Forwarding - If Busy`' option.

If Call Waiting is `On`, you will be notified of a waiting call by an audible alert and by the message `Call Waiting - Answer?`. You can press the (OK) key to accept the waiting call, or use the (MENU) and then the ⇕ key to scroll to an alternative option and then press (OK).

If you have Caller Line Identification, the caller's number or name is displayed instead of the Call Waiting message.

Availability of this feature depends on your service provider.

OK Call Barring

Call barring is a network feature which can be used to selectively bar outgoing and incoming calls.

If you change the barring setting, you may be asked to enter your barring password. There will be a short delay while the phone notifies the network of the new setting. When the change has been made by the network, the phone will display a confirmation message.

The *initial* password will be supplied to you by your Cellular Service Provider when you subscribe to this service.

This option may be affected by the Fixed Dialing setting.

Bar Outgoing Calls

After selecting this option, there will be a short delay while the phone asks the network for the current setting.

Int'l Calls

When selected, this option will bar outgoing international calls.

Int'l Calls Except Home

When selected, this option will bar outgoing international calls, except those to your home country.

All Calls

When selected, this option will bar all outgoing calls, except emergency calls.

Off

When selected, this option will disable all call barring for outgoing calls.

Bar Incoming Calls

After selecting this option, there will be a short delay while the phone asks the network for the current setting.

When Roaming

When selected, this option will bar incoming calls when you are roaming.

You may wish to select this option, as some Cellular Service Providers charge an additional fee for receiving calls when you are roaming.

All Calls

When selected, this option will bar all incoming calls.

Off

When selected, this option will disable all call barring for incoming calls.

Cancel All Barring

This option can be used to set all Call Barring options to `Off`.

Change Bar Password

This option can be used to change the call barring password.

After selecting this option, you will be asked to enter the current password.

You will then be asked to enter, and then re-enter, your new, **4 digit**, barring password. When the change has been made by the network, the phone will display a confirmation message.

Messages Menu

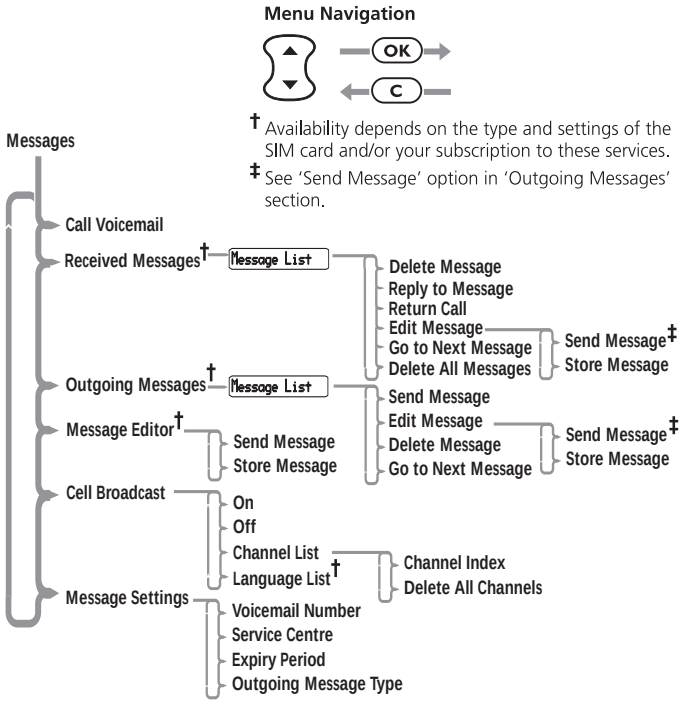

Your phone supports the two GSM message features: Short Message Services (SMS) and Cell Broadcast.

SMS Messages

These are text messages that are sent specifically to and from your phone number. When an SMS message is received, your phone:

1. Makes three short alert tones.
2. Displays the ✉ (messages) icon.
3. Stores the message for later viewing, if there is space. If there is not enough space, the ✉ icon will flash. One or more messages must be removed before the message can be stored.

Your Cellular Service Provider will transmit a message for a limited amount of time. If a memory location is not made available before the message is removed from the network, then you will not be able to receive or read it.

4. `Message` will then be displayed, followed by `Read Now?`
5. If (OK) is pressed, the phone will enter the Received Messages browser and immediately display the new message.
6. If (C) is pressed, the phone will return to the screen which was displayed prior to receipt of the message.
7. If any other key is pressed it will perform the function linked with that key.
8. If no key is pressed the display will time-out after 1 minute and return to the screen which was displayed prior to receipt of the message.

angelsing.bk Page 52 Thursday, March 30, 2000 4:55 PM

Cell Broadcast Messages

These are general messages that your service provider broadcasts to all phones in a geographic area. Your phone can only receive a cell broadcast message when it is in idle mode.

The messages are broadcast in numbered 'channels'. For example, channel 050 might be for local weather, traffic reports or stock market prices. Please contact your service provider for a list of available channels and the information they provide.

While a broadcast message is scrolling across the display, you can stop and start it by pressing (*). Press (#) to restart the message from the beginning. If you want to remove the message from the display, press (C).

If you need to use the (*) and (#) keys for their normal functions while you are receiving a cell broadcast message, you must first remove the message.

When the message has scrolled across the display, the beginning of the message remains until one of the following occurs: you remove it; a new message arrives; or you leave the geographic area. For set up details, see ***Cell Broadcast***.

How to Read SMS Messages

You can use the scroll key (⁘) to scroll through messages in either the Received Messages or Outgoing Messages lists.

To display a specific message, enter the message number, for example press (5 JKL) to display the 5th message. If the message does not exist, `Invalid Msg Number` will be displayed.

Alternatively, to display the next message, press (OK) and select `Go To Next Message`.

How to Create and Edit SMS Messages

Use the *Message Editor* to create or modify text messages. When you enter the editor, the last message that was edited will be displayed. Press and hold (C) to clear the message and start a new one, or modify the message displayed. For an explanation of how to enter text, see 'How to Enter Alphabetic Characters'.

Press (OK) once you have completed your message. You will then be presented with the following options:

`Send Message` - If you select this option you will be prompted for a phone number, enter the number and then press (OK) to send the message.

`Store Message` - Select this option to store your edited message in your Outgoing Messages list.

If you don't store the message after it has been edited, you will lose all your changes as soon as you select another message to be edited.

OK *Received Messages*

Press ⊙. Select the Quick Access feature (Read Messages?).

This option is used to view and manage any SMS messages that have been sent to your phone number.

When selected, this option will display a message indicating the total number of messages and how many of these are new. If there are no messages `No Messages` will be displayed.

If there are messages, the new messages will be displayed first, followed by the old. Repeated presses of the ⊙ key will display the whole message, when it was sent and the phone number who sent it (if available).

Once you have read a new message it will automatically become old.

See 'How to Read SMS Messages' for more information on navigating through the messages.

Press the OK key, when viewing any message, to enter the sub-menu.

Delete Message

This option will delete the currently viewed message.

Reply to Message

This option allows you to reply with a message.

Return Call

This option can be used to call the person who sent you the message, if their number has been included by the network, or a number that has been included in quotes " " in the message.

Edit Message

This option allows you to use the Message Editor to edit the selected message and then to either send the modified message and/or store it in your Outgoing Messages list. See 'How to Create and Edit SMS Messages' for more information on using the Message Editor.

Go to Next Message

This option will display the next received message.

If you are currently reading the last message in your list then this option will take you back to the top of the list.

Delete All Messages

This option allows you to delete all received messages whether they have been read or not.

☞Once deleted, messages are NOT retrievable.

Outgoing Messages

This option is used to view and manage any outgoing messages. These messages will be stored on your SIM card. When you select this option, the total number of messages will be displayed followed by the first message in the list.

You cannot send an outgoing message until the Message Service Center number has been set. See 'Message Settings'.

Press the (OK) key, when viewing any message, to enter the sub-menu. See 'How to Read SMS Messages' for more information on navigating through the messages.

Send Message

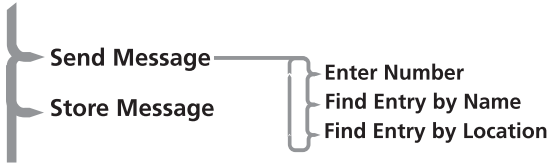

This option allows you to add the destination phone number using a sub-menu. Using the scroll keys you can select:

Enter Number - this allows you to manually enter the phone number using the keypad and send the message.

Find Entry by Name - this allows you to recall a phone number from the Phone Book by name and send the message (see 'Find Entry by Name' in the 'Phone Book' section).

Find Entry by Location - this allows you to recall a phone number from the Phone Book by location and send the message (see 'Find Entry by Location' in the 'Phone Book' section).

Edit Message

This option allows you to use the Message Editor to edit the selected message and then to either send the modified message or store it in your Outgoing Messages list. See 'How to Create and Edit SMS Messages' for more information on using the Message Editor.

Delete Message

This option will delete the currently viewed message.

Go to Next Message

This option will display the next outgoing message.

Message Editor

Press (↑). Select the Quick Access feature (Message Editor?).

The Message Editor is used to edit the currently selected message and then to either send the modified message or store it in your Outgoing Messages list. See 'How to Create and Edit SMS Messages' for more information on using the Message Editor.

Cell Broadcast

This option determines the cell broadcast settings. See also ***Cell Broadcast Messages***.

On

Select `On` to receive cell broadcast messages. You must then use `Channel List` to specify the appropriate channels.

Off

When you select `Off`, you do not receive any cell broadcast messages and you automatically delete all existing cell broadcast messages.

Channel List

Select either `Channel Index` or `Delete All Channels`.

Channel Index

This option allows you to select up to five different channels for receiving cell broadcast messages. If you modify a channel, you also remove any message associated with it.

Use ⁝ to highlight the channel index you require (1-5) and then press (OK). The phone prompts you to `Enter Channel`.

Type in the channel number and press (OK). The phone stores the channel details and returns you to the channel index list.

Please contact your service provider for a list of available channels and the information they provide.

Delete All Channels

This option deletes all the channels and all the existing messages.

Language List

☞ *Availability depends on the type and settings of the SIM card, and/or your subscription to this feature where available.*

This option allows you to select different languages for Cell Broadcast message. See also ***Language Selection*** in the ***Phone Setup Menu***.

Message Settings

Voicemail Number

This option is used to enter a phone number which will be used by the 'Call Voicemail' option.

If there is already a Voicemail Number, this will be shown in the display. This can be used, modified or deleted as desired.

Service Center

Before you can send any messages you must use this option to enter your Message Service Center number. This number is obtained from your Cellular Service Provider.

If there is already a Message Service Center number, this will be shown in the display. This can be used, modified or deleted as desired.

Expiry Period

You can use this option to specify the maximum time, in hours, that your unforwarded messages are to remain with the Message Service Center before being deleted. When you select this option, the current expiry period will be displayed (the default is 24 hours).

The maximum value you can enter is 10584, though the real limit will depend on your Message Service Center.

Outgoing Message Type

This option is network dependent and can be used to specify the format of your outgoing messages. You can select from the following message types: `Text` (default), `Fax`, `X400`, `Paging`, `E-Mail`, `ERMES` or `Voice`.

☞ *You do not need to select* `Voice` *to send messages to Voicemail boxes.*

Phone Setup Menu

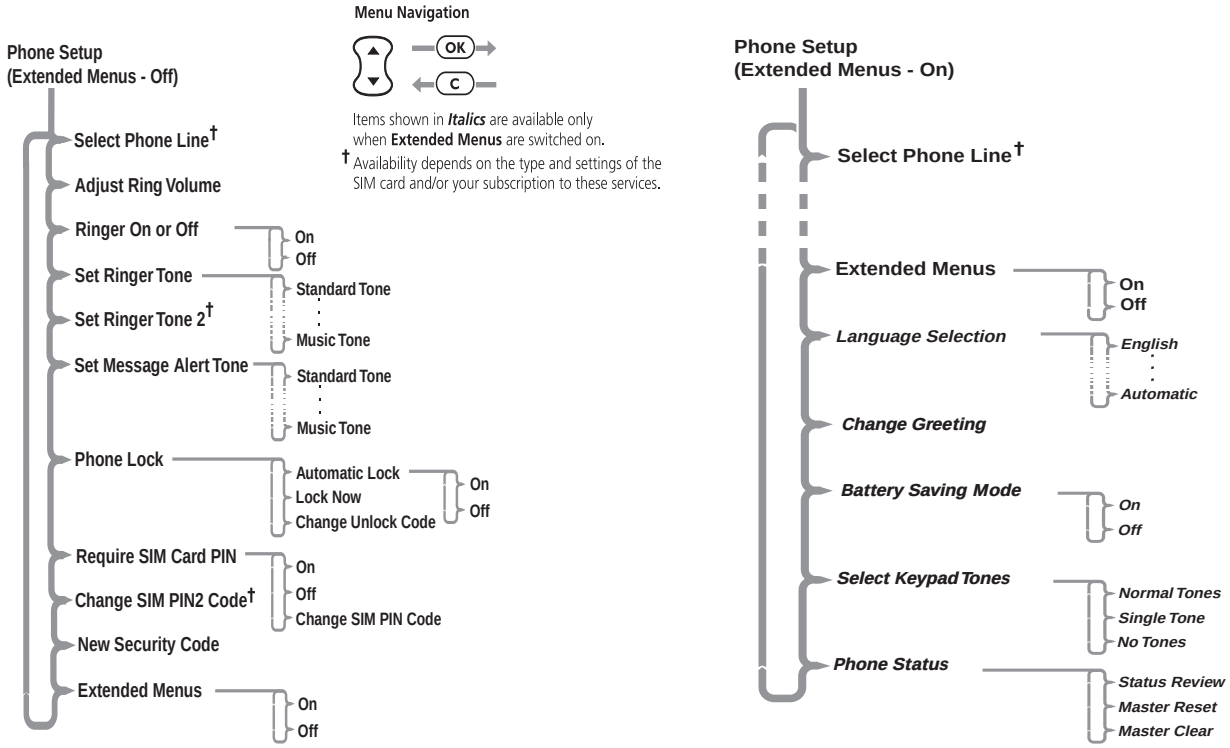

Select Phone Line

This option allows you to switch between `Line 1` and `Line 2`.

☞*Availability depends on the type and settings of the SIM card, and/or your subscription to this feature.*

Adjust Ring Volume

This option is used to set the incoming call ring tone volume.

The volume will be displayed as follows:

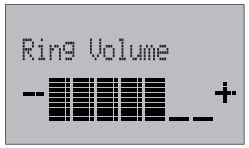

Adjust the volume by pressing the volume buttons on the side of your phone.

Ringer On or Off

Sets incoming call alert to either a ringer tone or a display message.

OK *Set Ringer Tone*

This option sets the tone your phone will make when an incoming call is received on Line 1.

Standard Tone

Your phone makes a standard ringing tone.

Single Ring Tone ... Music Tone

When selected, your phone will produce one of these alternative ringer tones.

☞*If you select the Single Ring Tone option, the phone will only ring once when a call is received.*

OK *Set Ringer Tone 2*

This option sets the tone your phone will make when an incoming call is received on Line 2.

☞*This option will not appear if you do not subscribe to Line 2.*

OK *Set Message Alert Tone*

This option sets the tone your phone will make when it receives an SMS message.

Standard Tone

Your phone makes a standard ringing tone.

Single Ring Tone ... Music Tone

When selected, your phone will produce one of these alternative SMS alert tones.

☞*If you select the Single Ring Tone option, the phone will only ring once when it receives an SMS message.*

OK Phone Lock

This option is used to set, and change, the unlock code.

The unlock code can be set to protect your phone from unauthorized use. It can be set to automatically lock your phone each time it is switched on.

The unlock code is a four digit number which is set by the manufacturer to **1234**. This can be changed at any time by using the 'change unlock code' option.

Automatic Lock

This option can be used to automatically lock your phone each time it is switched on. The option has two settings, `On` or `Off`.

Lock Now

This option can be used to immediately lock your phone. Once selected, your phone will be unusable until the unlock code is entered.

Change Unlock Code

This option is used to change the unlock code.

After selecting this option, you will be asked to enter the current security code before you can proceed.

You can now enter a four digit code to replace the old code.

By pressing the MENU key, you can access this option even when the phone is locked.

Require SIM Card PIN

This option is used to set, and change, the PIN code.

The PIN code can be set to protect your SIM card from unauthorized use. If set to `On`, access to your SIM card will be restricted each time it is inserted or the phone is turned on.

The option has two settings, `On` or `Off`.

If the SIM card does not support PIN code disabling, these items will not appear.

Change SIM PIN Code

This option is used to change the SIM card PIN code.

The 'Require SIM Card PIN' option must be set to `On` and you must enter the old PIN code before you can proceed.

You will be asked to enter a new, four to eight digit code to replace the old PIN code. The new PIN code must be entered again as confirmation.

If the PIN number is entered incorrectly three times in a row, your SIM card will automatically lock-up and the `Blocked` ***message will be displayed.***

Unblocking Your Phone

If you receive the Blocked message you will need to enter an unblock code and key sequence before you can use the phone.

The 8 digit PIN unblocking code will have been provided with your SIM card by your Cellular Service Provider.

Enter the following key sequence to unblock your phone:

◂✳ ◂✳ 0+ 5jkl ◂✳ **Unblock Code** OK
New PIN Code OK **New PIN Code** OK

The new PIN code must contain four to eight digits.

If this operation is performed incorrectly 10 times in a row, your SIM card will become permanently blocked.

Change SIM PIN2 Code

This option is used to change your PIN2 security code.

When you select this option you must enter the old PIN2 security code before you can proceed.

You will be asked to enter a new, four to eight digit code to replace the old PIN2 security code. The new PIN2 security code must be entered again as confirmation.

If the PIN2 security code is entered incorrectly three times in a row, the Blocked ***message will be displayed.***

When the Blocked message is displayed, you are not allowed access to menu items that require you to enter the PIN2 code, for example 'Setup Fixed Dialing' and 'Call Charge Settings'.

If you receive the Blocked message when you try to enter your PIN2 code, you will need to unblock and change the code using the following key sequence:

◂✳ ◂✳ 0+ 5jkl 2abc ◂✳ **Unblock Code** OK
New PIN2 Code OK **New PIN2 Code** OK

The 8-digit unblocking code will have been provided with your SIM card by your Cellular Service Provider.

If the PIN2 unblocking operation is performed incorrectly 10 times in a row, your PIN2 code will become permanently blocked.

OK *New Security Code*

The security code is used to control access to security and other options within the menus.

This option is used to change the security code, which is set by the manufacturer to **000000**.

Once selected, you will be asked to enter the current security code before you can proceed.

You will then be asked to enter a new, six digit code to replace the old security code.

In order to safeguard your phone, you should change your security code from the factory setting as soon as possible.

angelsing.bk Page 61 Thursday, March 30, 2000 4:55 PM

OK Extended Menus

This option is used to switch the extended menus on or off.

If the extended menu option is switched off, you will not be able to access any of the extended features.

The option has two settings, `On` or `Off`.

OK Language Selection

This option is used to change the language for display messages.

The option has multiple settings.

When you select a language, all further display prompts and help messages will be in the selected language.

Change Greeting

Changes the message displayed when you switch on your phone. May not be available if pre-programmed by your Service Provider.

Battery Saving Mode

This option can help you to conserve battery power by activating DTX (Discontinuous Transmission), and deactivating the backlight for incoming Cell Broadcast messages.

The option has two settings, `On` or `Off`.

OK Select Keypad Tones

This option allows you to change or disable tones you hear when you press a key.

The option has three settings, `Normal Tones`, `Single Tone` or `No Tones`.

Phone Status

Status Review

This option can be used to view the current setting of menu options.

When selected, your phone will display a list of menu items which have been changed from the default setting. Press the (MENU) key to view the next item.

Master Reset

! This option should be used with caution.

This option is used to restore certain phone options to their original settings.

When selected, you will be asked to enter the security code. Once entered, the master reset option will perform the following operations:

- Cancel Automatic Answer, Audible Call Timers, In-Call Display Meter, Battery Save (DTX), Automatic Lock and Cell Broadcast.
- Return Language Selection to Original.
- Restore Keypad Tones to Normal, Ringer Tones to Standard, SMS Alert Tones to Standard, Volume Level to Medium and Network Search frequency to Medium.
- Restore Extended Menus to their default settings.

Master Clear

! This option should be used with extreme caution.

This option is used to restore certain phone options to their original settings.

When selected, you will be asked to enter the security code. Once entered, the master clear option will perform the same operations as 'Master Reset', plus the following operations:

- Clear the Last Calls Made and Last Calls received list
- Clear the Message Editor
- Reset the Resettable Call Timers.

Master Clear does **not** clear the:

- Fixed Dial list
- My Number(s) list
- Charge Meters
- Received and Outgoing Messages list
- Voicemail number
- SMS Service Center number
- Lifetime timer.

Network Selection Menu

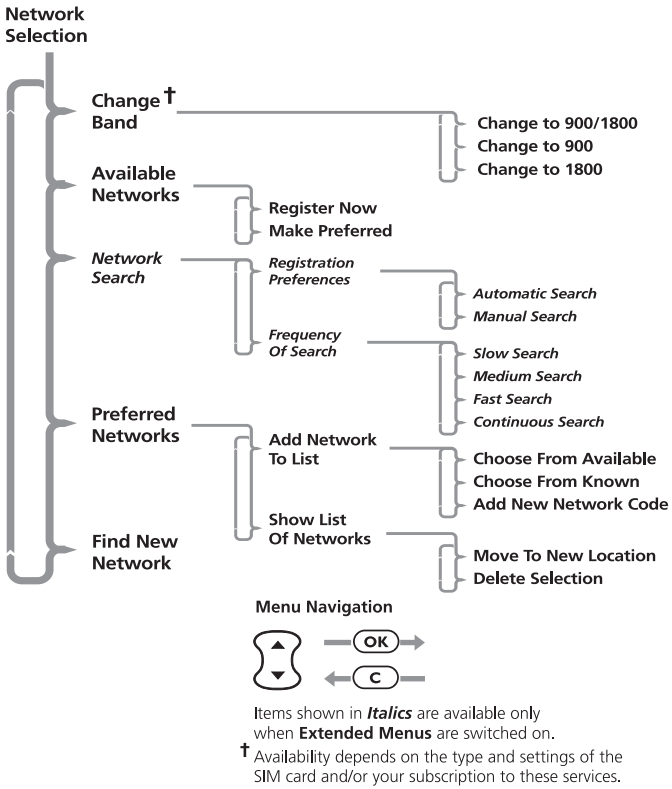

Items shown in ***Italics*** are available only when **Extended Menus** are switched on.

† Availability depends on the type and settings of the SIM card and/or your subscription to these services.

Network Selection

In order for the phone to make and receive phone calls, it must register with one of the available networks.

Your phone automatically searches for the last network used. If, for any reason, this network is unavailable, your phone will attempt to register with a new network.

When your phone needs to register with a new network, it will generate a sorted list of networks.The network list is sorted in the following order:

- The Home network.
- Networks from a preferred list.
- A random list of other networks found above a certain signal strength.

Any forbidden networks, stored in the SIM card, will not be included in the sorted list.

Available Networks

When selected, this option will scan to see which networks are operating in your current location. When the scan is complete, press the ⊡ key to scroll through the list. When you see a network you wish to register with or store in your preferred list, press the (OK) key. You will now enter the 'Register Now' and 'Make Preferred' sub-menu.

Register Now

Once selected, your phone will try to register with the selected network. If the registration fails, your phone will try to register in the normal way.

Make Preferred

Once selected, you will be asked where the selected network is to be located in the preferred list.

Network Search

These options determine how often your phone tries to register with a network and how the attempt is made.

Registration Preferences

This option determines how the phone tries to register with a network.

The option has two settings, `Automatic Search Mode` and `Frequency of Search`.

Automatic Search Mode

In the automatic mode, the phone will try to register with the first network in the sorted list. If this is successful, your phone will display the network name and then enter the standby mode.

If registration is unsuccessful with one network in the list, your phone will try the next listed network. If your phone fails to register with any of the listed networks, it will start at the beginning of the list after a preset period. The preset period is determined by the 'Frequency Of Search' option.

Frequency of Search

This option is used to determine how long your phone waits before attempting to re-register after a registration attempt has failed.

The option has the following settings: `Slow Search`, `Medium Search`, `Fast Search` or `Continuous Search`.

Fast and Continuous Search may use up a significant amount of battery power.

Preferred Networks

Add Network to List

This option enables you to add networks to your preferred list.

When selected the `Choose from Available` option will scan to see which networks are operating in your current location. When the scan is complete, press the ⟲ key to scroll through the list. When you see a network you wish to store in your preferred list, press the (OK) key. You will be asked where the selected network is to be located in the preferred list.

The `Choose from Known` option will, when selected, present you with a preset list of networks. Press the ⟲ key to scroll through the list. When you see a network you wish to store in your preferred list, press the (OK) key. You will be asked where the selected network is to be located in the preferred list.

Select the `Add New Network Code` option to enter network codes directly. Once entered, you will be asked where the network is to be located in the preferred list.

Show List of Networks

This option is used to display the networks you have stored in your preferred list. In addition, pressing the (OK) key will select the current displayed entry and enter a move/delete sub-menu.

When `Move to New Location` is selected, you will be asked to enter a new location for the selected network.

When selected, `Delete Selection` will remove the selected network from the preferred list.

Find New Network

When selected, the phone will try to register with a network in the normal manner, with one exception. When the registration attempt is made, your current network will be excluded from the list of those available. If the attempt fails, your phone will then try to re-register with the previous network.

Call Meters Menu

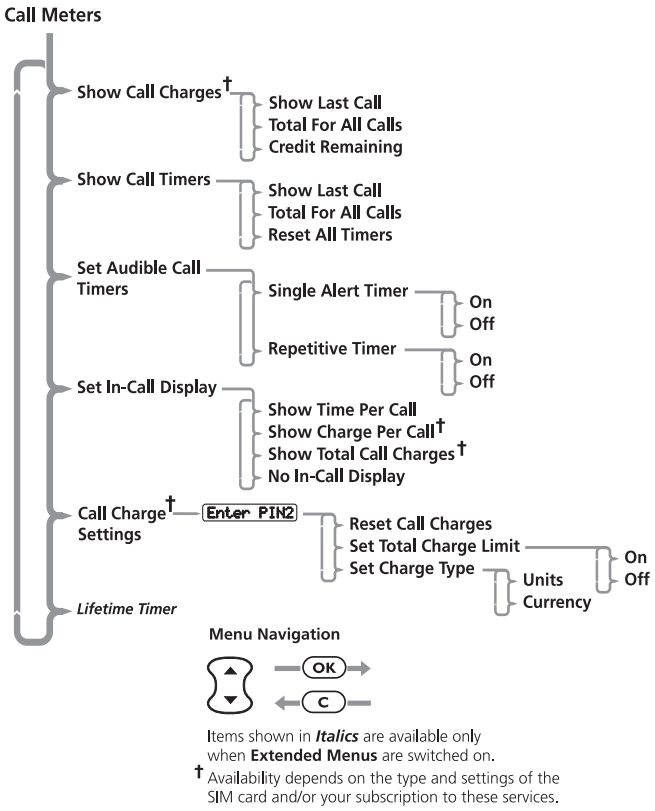

Items shown in ***Italics*** are available only when **Extended Menus** are switched on.

† Availability depends on the type and settings of the SIM card and/or your subscription to these services.

Call Metering

Your phone has an internal metering system which can be used to provide you with individual and total call times or costs.

☞ *Call cost information is only available if you receive the Advice of Charge service. If you do not receive this service, then only time meters are available.*

The meter can be displayed during a phone call and audible tones can be generated to indicate the passage of call time.

Your phone can handle values up to 21 digits long, although during calls it can only display the last 12 digits. If the value exceeds 21 digits, then `Too Large` is displayed.

In addition, you can set a maximum charge limit so that your phone will monitor either the number of units used or the call cost, and then not allow the limit to be exceeded.

Show Call Timers

This feature allows you to display the duration of your calls and to reset your time meters to zero.

If you receive the Advice of Charge service then all calls are timed. If you do not receive the Advice of Charge service then, depending on the model, either all calls or only outgoing calls are timed.

Show Last Call

Displays the duration of your last call.

Total For All Calls

Displays the duration of all your calls since the time meter was reset to zero using the 'Reset All Timers' option.

Reset All Timers

Sets the resettable time meters to zero. The Lifetime Meter is not resettable.

OK *Set Audible Call Timers*

Your phone provides two programmable audible call timers:

- The 'Single Alert Timer' will sound a beep just once during a call, after a preset time has elapsed.
- The 'Repetitive Timer' will sound regular beeps during a call, at preset intervals.

In both cases, the timers will sound their beeps ten seconds before the end of the programmed time.

Set In-Call Display

This feature allows you to specify whether the time or charge meters are displayed during a call. If you do not have the Advice of Charge service, then only the time meter is available.

☞ *If a total charge limit has been set, then the in-call display always shows your remaining credit.*

Show Time Per Call

This option is used to display the time meter during calls. If you receive the Advice of Charge service, only the chargeable calls will be displayed.

Show Charge Per Call, Show Total Call Charges

☞ *These menu items are only available if you receive the Advice of Charge service.*

These options are used to display the call charges meter during and after chargeable calls. The meter shows phone units or currency depending on the setting of the 'Set Charge Type' option.

No In-Call Display

This option switches off in-call display of the charge/time meter.

Lifetime Timer

This option is used to display the total time of all calls made on your phone.

This meter can not be reset, the `Reset All Timers`, `Master Reset` or `Master Clear` options have no effect.

Accessory Setup Menu

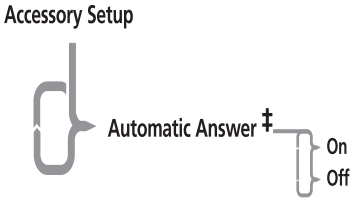

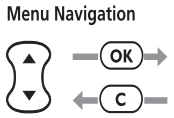

‡ Only this option will be displayed when the headset accessory is attached.

Your phone can also be linked to external microphones and speakers for handsfree operation.

OK *Automatic Answer*

This option allows your phone to automatically answer an incoming call after two rings.

This option has two settings, `On` or `Off`.

Using the Quick Access Menu

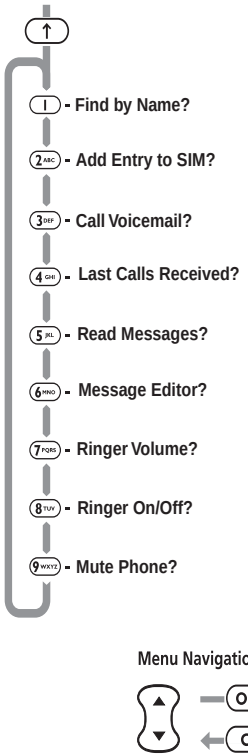

☞ *The menu shown above represents the default setting supplied with your phone.*

Although the features in your phone are available through easy access menus, some of the most commonly used features are also available in the Quick Access menu. Each feature in the menu is allocated a number from 1 to 9.

To use a Quick Access feature, press the quick access key (↑) followed by the number of the feature, or press ↕ to scroll through the menu and then press OK.

You can change the features, and the positions of the features, available in the Quick Access menu - see 'Customizing the Quick Access Menu'.

Each Quick Access feature is represented by an icon as well as the feature name. The currently selected icon is shown with a dark background.

Find by Name?

You will be prompted to `Enter Name`. Enter the first three characters of the name and press OK. The first matching entry in the Phone Book will be displayed. Press OK to call the number.

Find Location?

You will be prompted to `Enter Location`. Enter the location number and press OK. The first matching entry in the Phone Book will be displayed. Press OK to call the number.

Add to SIM?

You will be prompted to enter a phone number and then a name.

☞*If you already had a number displayed, it will automatically be re-displayed when you select this feature.*

The number will be stored in the next available SIM card location. See 'Add Entry' for more information.

Battery Meter?

A bar graph indicating the approximate battery charge level will be displayed. The more bars displayed, the greater the charge level.

See 'Show Battery Meter' for more information.

Lock Now?

Immediately locks your phone, you will not be able to use your phone until the unlock code is entered. See 'Phone Lock' for more information.

Mute Phone?

Temporarily turns the microphone off during a phone call. Reselect this option to resume your conversation.

Adjust Ring?

This option is used to display and to set the incoming call ring tone volume.

Ringer On/Off?

This option allows you to turn off your phone's ringer.

Read Messages?

Your newest message will be displayed; you can then read, delete and edit messages as normal. See 'Received Messages' for more information.

Outgoing SMS?

Your newest message will be displayed; you can then read, send, delete and edit messages as normal. See 'Outgoing Messages' for more information.

Message Editor?

The last message that was edited will be displayed. Press and hold (c) to clear the message and start a new one, or modify the message displayed. See 'How to Create and Edit SMS Messages' for more information.

Received Calls?

Displays the first entry in the Last Calls Received list. You can scroll through the list and call the numbers as normal. See 'Last Calls Received' for more information.

Call Timer?

Displays the duration of your last chargeable call. See 'Show Call Timers' for more information.

angelsing.bk Page 71 Thursday, March 30, 2000 4:55 PM

Show Credit?

Allows you to quickly display the Credit Remaining.

☞ *This will only show the credit remaining if you receive the Advice of Charge service.*

Restrict My ID?

Your phone number will not be sent with the next attempted call; after this your phone number will be sent until you reselect this option.

Find New Network?

Allows you to quickly search for a new network.

Adjust Contrast

Allows you to adjust the screen contrast.

Forward On/Off?

Unconditional voice call forward will be switched either on or off depending on the current setting.

☞ *You must have defined a forward number using the 'Forward All Voice Calls' option in the Call Forwarding menu in order to use this feature.*

☞ *You cannot switch call forwarding on or off if you are outside network coverage.*

Call Voicemail?

Your phone will make a call to your voicemail number.

☞ *You must have defined a Voicemail number in order to use this feature.*

See 'Call Voicemail' for more information.

angelsing.bk Page 72 Thursday, March 30, 2000 4:55 PM

Customizing the Quick Access Menu

You can change the features in the Quick Access menu to suit your personal preferences.

To customize the menu:

1 Press ↑ and scroll to the menu item you wish to change.

2 Press and hold OK to access the list of features available. The currently selected feature will be displayed.

3 Scroll through the list until you find the feature you wish to store in the Quick Access menu; press OK.

4 `Completed` will be displayed to confirm that the feature has been stored.

The items in the Quick Access list will appear in the following order:

- Find by Name
- Find by Location
- Add Entry to SIM
- Battery Meter
- Phone Lock Now
- Phone Mute On or Off
- Ring Volume
- Ringer On or Off
- Divert All On or Off
- Read Messages
- Outgoing Messages
- Message Editor
- Last Calls Received
- Last Call Charge
- Last Call Timer
- Credit Remaining
- Restrict My ID
- Find New Network
- Show Services
- Change Band
- Switch Lines 1/2

Accessories

The following accessories have been designed to work with your phone. Additional accessories may be available and are packaged separately. Please refer to your local service provider or retail outlet for more information.

☞*The use of wireless devices and their accessories ("devices") may be prohibited or restricted in certain areas. Always obey the laws and regulations on the use of these devices.*

☞*Please ensure that when using any external connector with your phone that you are certain that it is fully inserted.*

Travel Charger

The Power Adapter (charger) plugs into top connector and connects the phone to a standard wall outlet. When connected directly to the phone, it charges the battery.

Vehicular Power Adapter

The Vehicular Power Adapter connects to your phone and allows you to charge your phone's battery while driving.

Belt Clip

The Belt Clip holds the phone while being worn on your belt.

☞*The belt clip has been designed for your convenience and is not meant to secure your phone under all circumstances.*

Headset

The convenient headset provides both an earphone and microphone in one small accessory for simple handsfree and private telephone conversations. The headset plugs directly into the jack on the bottom right side of your phone, below the main power supply, so that you can wear your phone and move freely.

Personal Handsfree System

The Personal Handsfree System allows you to use your phone handsfree.

Hands-Free Accessories...

The following hands-free wireless phone accessories are available today

- Hands-Free - Zero Installation Kit
- Hands-Free - Integrated Installation
- Hands-Free Headset

For information call 1-800-331-6456 or write

Motorola
Personal Communications Sector
600 North US Highway 45
Libertyville, Illinois 60048

angelsing.bk Page 74 Thursday, March 30, 2000 4:55 PM

What to do if...

You can't switch your phone on	*Check the battery.* Is it charged, properly fitted and are the contacts clean and dry? See 'Important Battery Information'.
You can't make calls	*Check the signal strength meter in the display.* If the signal is weak, move to an open space or, if you are in a building, move closer to a window. *Check that your phone is switched on.* *Check the Network Selection settings.* Try Manual Selection, or try another network. See 'Network Search'. Network and subscription dependent feature. Not available in all areas. *Check your Operator coverage map*. *Is* `Restricted` *displayed?* Check the Call Barring and Fixed Dialing settings. *Has a new SIM card been inserted?* Check that no new restrictions have been imposed.
You can't receive calls	*Check the signal strength meter in the display.* If the signal is weak, move to an open space or, if you are in a building, move closer to a window. *Check the Call Forward and Call Barring settings.* *Check the Ringer settings*. If it is off, there is no audible alert. See 'Ringer On or Off'.
Your phone won't unlock	*Have you inserted a new SIM card?* Enter the new PIN code. See 'Entering Your SIM Card PIN Code'. *Do you have a replacement phone?* Enter the default phone unlock code - 1234. *Have you forgotten the unlock code?* Press (MENU) to change the unlock code (you will need your security code).
Your PIN is blocked	*Enter the PIN unblocking code supplied with your SIM card (see 'Unblocking Your Phone').*
Your PIN2 is blocked	*Enter the PIN2 unblocking code supplied with your SIM card (see 'Change SIM PIN2 Code').*
Your SIM card won't work	*Is the card inserted the right way around? See 'SIM Card Insertion/Removal'.* *Is the gold chip visibly damaged or scratched?* Return the card to your Service Provider. *Check the SIM contacts.* If they are dirty, clean them with an antistatic cloth.

The battery won't charge	*Check the alignment of the batteries to ensure that they are installed properly.* Make sure that the positive (+) and negative (-) marks on the batteries match the markings on the phone. *Check the charger.* Is it properly connected? Is it fully inserted? Are its contacts clean and dry? The phone should provide a beep-tone and the display should read "Charging Battery" within two minutes from the transformer being installed. See 'Your Battery'. *Check the battery contacts.* Are they clean and dry? *Check the battery temperature.* If it is warm, let it cool before recharging. *Is it an old battery?* Battery performance will decline after several years use. Replace the battery. *Are you using a Motorola original battery?* See 'Your Battery'.
The battery drains faster than normal	*Are you in an area of variable coverage?* This uses extra battery power. *Is it a new battery?* A new battery will need two to three charge/discharge cycles to attain normal performance. See 'Charging a New Battery' *Is it an old battery?* Battery performance will decline after several years use. Replace the battery. *Is it a battery that hasn't been completely discharged?* Allow the battery to fully discharge (until the phone turns itself off) and then charge the battery overnight. *Check that the Frequency Of Search feature in the Network Selection menu has not been set to* `Fast` *or* `Continuous`*. See 'Network Search'.* *Check that the Battery Saving Mode feature has not been set to* `Off`*.* *Are you using your phone in extreme temperatures?* At extreme hot or cold temperatures, battery performance is significantly reduced.
You can't cancel Call Forwarding or Call Barring	*Wait until you are in an area with good network coverage and try again.*
The ✉ symbol is flashing	*There is not enough memory available to store another SMS message*. Use the Messages menu to delete one or more existing messages.
You can't make international calls	*Some Service Providers automatically bar the ability to make international calls.* Contact your Service Provider.
Your Personal Handsfree System is not operating properly	*Check all of the connections and make sure that they are inserted correctly.* *Check the connections to make sure that they are fully inserted.*

angelsing.bk Page 77 Thursday, March 30, 2000 4:55 PM

U.S. Food and Drug Administration (FDA)

The U.S. Food and Drug Administration's Center for Devices and Radiological Health Consumer Update on Mobile Phones

FDA has been receiving inquiries about the safety of mobile phones, including cellular phones and PCS phones. The following summarizes what is known--and what remains unknown--about whether these products can pose a hazard to health, and what can be done to minimize any potential risk. This information may be used to respond to questions.

Why the concern?

Mobile phones emit low levels of radiofrequency energy (i.e., radiofrequency radiation) in the microwave range while being used. They also emit very low levels of radiofrequency energy (RF), considered non-significant, when in the stand-by mode. It is well known that high levels of RF can produce biological damage through heating effects (this is how your microwave oven is able to cook food). However, it is not known whether, to what extent, or through what mechanism, lower levels of RF might cause adverse health effects as well. Although some research has been done to address these questions, no clear picture of the biological effects of this type of radiation has emerged to date. Thus, the available science does not allow us to conclude that mobile phones are absolutely safe, or that they are unsafe. However, the available scientific evidence does not demonstrate any adverse health effects associated with the use of mobile phones.

What kinds of phones are in question?

Questions have been raised about hand-held mobile phones, the kind that have a built-in antenna that is positioned close to the user's head during normal telephone conversation. These types of mobile phones are of concern because of the short distance between the phone's antenna--the primary source of the RF--and the person's head. The exposure to RF from mobile phones in which the antenna is located at greater distances from the user (on the outside of a car, for example) is drastically lower than that from hand-held phones, because a person's RF exposure decreases rapidly with distance from the source. The safety of so-called "cordless phones," which have a base unit connected to the telephone wiring in a house and which operate at far lower power levels and frequencies, has not been questioned.

How much evidence is there that hand-held mobile phones might be harmful?

Briefly, there is not enough evidence to know for sure, either way; however, research efforts are on-going. The existing scientific evidence is conflicting and many of the studies that have been done to date have suffered from flaws in their research methods. Animal experiments investigating the effects of RF exposures characteristic of mobile phones have yielded conflicting results. A few animal studies, however, have suggested that low levels of RF could accelerate the development of cancer in laboratory animals. In one study, mice genetically altered to be predisposed to developing one type of cancer developed more than twice as many such cancers when they were exposed to RF energy compared to controls. There is much uncertainty among scientists about whether results obtained from animal studies apply to the use of mobile phones. First, it is uncertain how to apply the results obtained in rats and mice to humans. Second, many of the studies that showed increased tumor development used animals that had already been treated with cancer-causing chemicals, and other studies exposed the animals to the RF virtually continuously--up to 22 hours per day.

For the past five years in the United States, the mobile phone industry has supported research into the safety of mobile phones. This research has resulted in two findings in particular that merit additional study:

1 In a hospital-based, case-control study, researchers looked for an association between mobile phone use and either glioma (a type of brain cancer) or acoustic neuroma (a benign tumor of the nerve sheath). No statistically significant association was found between mobile phone use and acoustic neuroma. There was also no association between mobile phone use and gliomas when all types of types of gliomas were considered together. It should be noted that the average length of mobile phone exposure in this study was less than three years.

   When 20 types of glioma were considered separately, however, an association was found between mobile phone use and one rare type of glioma, neuroepithelliomatous tumors. It is possible with multiple comparisons of the same sample that this association occurred by chance. Moreover, the risk did not increase with how often the mobile phone was used, or the length of the calls. In fact, the risk actually *decreased* with cumulative hours of mobile phone use. Most cancer causing agents increase risk with increased exposure. An ongoing study of brain cancers by the National Cancer Institute is expected to bear on the accuracy and repeatability of these results.[1]

2 Researchers conducted a large battery of laboratory tests to assess the effects of exposure to mobile phone RF on genetic material. These included tests for several kinds of abnormalities, including mutations, chromosomal aberrations, DNA strand breaks, and structural changes in the genetic material of blood cells called lymphocytes. None of the tests showed any effect of the RF except for the micronucleus assay, which detects structural effects on the genetic material. The cells in this assay showed changes after exposure to simulated cell phone radiation, but only after 24 hours of exposure. It is possible that exposing the test cells to radiation for this

long resulted in heating. Since this assay is known to be sensitive to heating, heat alone could have caused the abnormalities to occur. The data already in the literature on the response of the micronucleus assay to RF are conflicting. Thus, follow-up research is necessary.[2]

FDA is currently working with government, industry, and academic groups to ensure the proper follow-up to these industry-funded research findings. Collaboration with the Cellular Telecommunications Industry Association (CTIA) in particular is expected to lead to FDA providing research recommendations and scientific oversight of new CTIA-funded research based on such recommendations.

Two other studies of interest have been reported recently in the literature:

1. Two groups of 18 people were exposed to simulated mobile phone signals under laboratory conditions while they performed cognitive function tests. There were no changes in the subjects' ability to recall words, numbers, or pictures, or in their spatial memory, but they were able to make choices more quickly in one visual test when they were exposed to simulated mobile phone signals. This was the only change noted among more than 20 variables compared.[3]
2. In a study of 209 brain tumor cases and 425 matched controls, there was no increased risk of brain tumors associated with mobile phone use. When tumors did exist in certain locations, however, they were more likely to be on the side of the head where the mobile phone was used. Because this occurred in only a small number of cases, the increased likelihood was too small to be statistically significant.[4]

In summary, we do not have enough information at this point to assure the public that there are, or are not, any low incident health problems associated with use of mobile phones. FDA continues to work with all parties, including other federal agencies and industry, to assure that research is undertaken to provide the necessary answers to the outstanding questions about the safety of mobile phones.

What is known about cases of human cancer that have been reported in users of hand-held mobile phones?

Some people who have used mobile phones have been diagnosed with brain cancer. But it is important to understand that this type of cancer also occurs among people who have not used mobile phones. In fact, brain cancer occurs in the U.S. population at a rate of about 6 new cases per 100,000 people each year. At that rate, assuming 80 million users of mobile phones (a number increasing at a rate of about 1 million per month), about 4800 cases of brain cancer would be expected each year among those 80 million people, whether or not they used their phones. Thus it is not possible to tell whether any individual's cancer arose because of the phone, or whether it would have happened anyway. A key question is whether the risk of getting a particular form of cancer is greater among people who use mobile phones than among the rest of the population. One way to answer that question is to compare the usage of mobile phones among people with brain cancer with the use of mobile phones among appropriately matched people without brain cancer. This is called a case-control study. The current case-control study of brain cancers by the National Cancer Institute, as well as the follow-up research to be sponsored by industry, will begin to generate this type of information.

What is FDA's role concerning the safety of mobile phones?

Under the law, FDA does not review the safety of radiation-emitting consumer products such as mobile phones before marketing, as it does with new drugs or medical devices. However, the agency has authority to take action if mobile phones are shown to emit radiation at a level that is hazardous to the user. In such a case, FDA could require the manufacturers of mobile phones to notify users of the health hazard and to repair, replace or recall the phones so that the hazard no longer exists.

Although the existing scientific data do not justify FDA regulatory actions at this time, FDA has urged the mobile phone industry to take a number of steps to assure public safety. The agency has recommended that the industry:

- support needed research into possible biological effects of RF of the type emitted by mobile phones;
- design mobile phones in a way that minimizes any RF exposure to the user that is not necessary for device function; and
- cooperate in providing mobile phone users with the best possible information on what is known about possible effects of mobile phone use on human health.

At the same time, FDA belongs to an interagency working group of the federal agencies that have responsibility for different aspects of mobile phone safety to ensure a coordinated effort at the federal level. These agencies are:

- National Institute for Occupational Safety and Health
- Environmental Protection Agency
- Federal Communications Commission
- Occupational Health and Safety Administration
- National Telecommunications and Information Administration

The National Institutes of Health also participates in this group.

In the absence of conclusive information about any possible risk, what can concerned individuals do?

If there is a risk from these products--and at this point we do not know that there is--it is probably very small. But if people are concerned about avoiding even potential risks, there are simple steps they can take to do so. For example, time is a key factor in how much exposure a person receives. Those persons who spend long periods of time on their hand-held mobile phones could consider holding lengthy conversations on conventional phones and reserving the hand-held models for shorter conversations or for situations when other types of phones are not available.

People who must conduct extended conversations in their cars every day could switch to a type of mobile phone that places more distance between their bodies and the source of the RF, since the exposure level drops off dramatically with distance. For example, they could switch to:

- a mobile phone in which the antenna is located outside the vehicle,
- a hand-held phone with a built-in antenna connected to a different antenna mounted on the outside of the car or built into a separate package, or
- a headset with a remote antenna to a mobile phone carried at the waist.

Again, the scientific data do not demonstrate that mobile

phones are harmful. But if people are concerned about the radiofrequency energy from these products, taking the simple precautions outlined above can reduce any possible risk.

Where can I find additional information?

For additional information, see the following websites:

Federal Communications Commission (FCC) RF Safety Program (select "Information on Human Exposure to RF Fields from Cellular and PCS Radio Transmitters"):
http://www.fcc.gov/oet/rfsafety

World Health Organization (WHO) International Commission on Non-Ionizing Radiation Protection (select Qs & As):
http://www.who.int/emf

United Kingdom, National Radiological Protection Board:
http://www.nrpb.org.uk

Cellular Telecommunications Industry Association (CTIA):
http://www.wow-com.com

U.S. Food and Drug Administration (FDA) Center for Devices and Radiological Health: http://www.fda.gov/cdrh/consumer/

---

1 *Muscat et al. Epidemiological Study of Cellular Telephone Use and Malignant Brain Tumors. In: State of the Science Symposium;1999 June 20; Long Beach, California.*

2 *Tice et al. Tests of mobile phone signals for activity in genotoxicity and other laboratory assays. In: Annual Meeting of the Environmental Mutagen Society; March 29, 1999, Washington, D.C.; and personal communication, unpublished results.*

3 *Preece, AW, Iwi, G, Davies-Smith, A, Wesnes, K, Butler, S, Lim, E, and Varey, A. Effect of a 915-MHz simulated mobile phone signal on cognitive function in man. Int. J. Radiat. Biol., April 8, 1999.*

4 *Hardell, L, Nasman, A, Pahlson, A, Hallquist, A and Mild, KH. Use of cellular telephones and the risk for brain tumors: a case-control study. Int. J. Oncol., 15: 113-116, 1999.*

angelsing.bk Page 82 Thursday, March 30, 2000 4:55 PM

angelsing.bk Page 83 Thursday, March 30, 2000 4:55 PM

Patent Information

Manufactured under one or more of the following patents:

4121218	4127824	4128740	4138681	4193036	4254382
4302845	4312074	4327319	4329666	4369516	4369522
4378603	4390963	4398265	4400584	Re.31470	4431977
4434461	4455534	4462098	4484153	4485486	4486624
4491972	4504834	D278708	4523155	4546329	4549311
4550426	4551696	4564821	D282169	4571595	4573017
4574243	4585957	4602218	D284759	4616314	4617520
4626309	4628529	4629829	4630304	4630305	4633141
4636593	4636741	4644351	D288432	4648125	4649543
D288683	4654655	4654867	4662691	4667333	4668917
4670747	4672502	4692726	4704588	D292578	4706036
D292920	4710724	4711361	4715063	4716319	4716391
4723305	D294257	4727306	4727583	4730195	4734635
4737976	4740794	4741018	4741034	4742562	D295627
D295975	4751737	4761621	4764737	D297734	D297735
D297736	4777564	Re.32768	4783697	D299232	4797929
4798975	4800348	4802236	4803726	4809356	4811377
4811404	4816774	4817157	4823098	D300742	D300827
4827226	4827507	4829274	4829543	4837534	4843621
4845772	4851966	4868576	4872196	4873683	4876552
4876740	D304189	4879533	4885553	4887050	4890199
D305427	4896124	4896361	4897873	D305717	4903327
D306163	4904549	4905288	4905301	D306299	4910470
4912602	4916262	4918403	4918732	4922209	4924194
4930126	D309301	D309451	4945570	4954796	4956854
4963812	4963843	4965537	4970475	4972355	4972432
4972455	4975808	4982108	4984219	4989230	D314173
4992753	4998289	D315330	D315543	5004992	5008925
5010309	5010570	5014294	5014346	D316859	5017856
5018188	5020076	5020091	5020092	5020093	5023580
5023866	5023911	5025387	5028859	5029233	5036532
5040127	5042071	5045824	5053924	5055800	5055802
5055803	5057762	5058136	5059885	5060264	5060294
5063340	5065408	5067139	5068625	5070310	5077757
5081674	5083304	5093632	D325028	5107487	5109536
5111162	5113400	5113436	5117441	5117449	5121047
5121288	5121412	5122722	D327062	5124889	5127040
5127042	5128834	5130682	5130683	5133010	5136135
5140286	5142551	5142696	5148471	5150075	5150359
5150384	5152006	5152007	5153590	5157693	5159283
5160898	5163159	5164652	5166596	5166642	5170173
5170492	5173672	5175759	5175874	5177458	5182749
5185566	5187640	5187809	5192924	5193223	5195106
5195108	5198887	5200655	5201069	5202654	5203009
D334746	5204977	5205751	5208566	5210793	5211581
5212815	5212826	5214675	5214774	5220290	5222078
5222104	5222251	5224122	5230007	5230093	5233506
5233633	5235492	5237257	5237570	5239127	5239294
5241545	5241548	5241592	5241650	5241688	5241693
D338887	5242767	D339127	D339335	D339336	D339337
5247544	D339578	5249302	5250916	5251331	5253292
5255292	5257414	5259005	5260170	5260988	5261119
5262710	5263052	5263055	5265219	D341589	5271042
D342248	5276685	5276707	5276913	5278527	5278832
5278994	5280637	5280644	D343615	D343616	D343834
D343835	5287553	5287555	5287556	5289505	D344512
5297142	5299232	5301364	5301365	5308716	5312705
5321847	5323421	5325429	D348250	D348427	5327642
D348665	D348666	D348668	5331123	D349273	5336984
5338909	D350113	D350348	D350349	D350350	5349588

5351245	D351375	5359696	5361400	5363071	5365549
D352503	5366826	5367538	5367558	5371791	D353131
5373101	D353361	5375143	5375258	D353587	D353588
5379324	5384825	5392000	5392023	5396654	D356309
5402447	5404120	5404582	5406146	5406562	D357224
D357457	5410275	5414711	D358148	5420759	5424689
5428820	5428836	5430416	5432017	5434947	5436589
5436802	5438684	D361070	5444764	5446763	5448763
5448770	5448771	5453997	D362840	D362852	5461643
5463628	5465412	5469177	5475752	D365094	5477192
D365817	5486843	5487184	5488335	5490177	5493198
5493700	5493714	5495206	5497126	5497383	D367640
5499273	5504812	5506490	D368696	5508709	5510693
5511235	5513078	5513382	D369359	5513996	D369598
D369797	5519303	5519346	5519506	5519777	D370016
D370463	5526398	D370672	5530922	5539360	5542103
5542106	5544250	D372481	5546380	D372896	5551078
5555550	5559471	D374013	5561436	D374227	D374424
5565881	5570453	5572223	5572224	5577267	5577268
D375932	D375952				

Other patents pending

angelsing.bk Page 85 Thursday, March 30, 2000 4:55 PM

Index

A

Accessories 73
Accessory setup menu 68
Add entry
  To SIM card memory 41, 70
Adjust ring volume 58
Automatic answer 68
Automatic lock 59
Automatic redial 28
Available networks 64

B

Bar incoming calls 49
Bar outgoing calls 49
Batteries
  Charging 21
  Installing the Batteries 21
  Low battery warning 24
  Maintaining 22
  Removing 22
Battery charge indicator 20
Battery meter 46, 70
Battery saving mode 61
Blocked message 27, 60
Buttons
  Volume 19

C

Call forwarding 47, 71
Call holding 33
Call metering 66
Call meters menu 66
Call related features menu 46
Call timers 67
Call Transfer 36
Call waiting 33
Calling a number 28
Cancel all forwarding 71
Capacity 42
  Checking battery capacity 46
Cell broadcast 55
  Battery saving mode 61
  Messages 52
Change bar password 50
Change SIM PIN2 code 60
Change unlock code 59
Characters 40
Check capacity 42
Conference Call 32
  Call Waiting 36
  End Active And Held 32
  Hold Call 31
  Make a New Call 31
  Reconnect 32
  Reconnect Held Call 32
  Restrict My Number 31
  Split Call 32
  Switch Calls 32

D

Delete
  Last ten calls 43
  Message 53, 54
  Phone book entries 41
Detailed forwarding 48
Dialing phone book numbers 29
Display 20
Display characters 40
Displaying your own phone number 43
DTX 61

E

Earpiece connector 20
Editing messages 52
Emergency calls 29
Ending a phone call 30
Entering characters 39
Erase name and number 41
Extended menus 11, 61

F

Fault finding 75, 83
Find entry by location 41, 69
Find entry by name 40, 69
Find new network 65
Fixed dialing 44
  Calling numbers 44
  Setting 44

angelsing.bk Page 86 Thursday, March 30, 2000 4:55 PM

H

Hold Call 31

I

In use symbol 20
Initiating Transfer Call 36
Installing the Batteries 21
International phone calls 29

L

Language selection 61
Last Calls Received 43
Last ten calls 42, 70
Lifetime timer 67
Lock now 59
Locking the keypad 27
Low battery warning 24

M

Making a phone call 28
Master clear 62
Master reset 62
Menus
- Accessory setup menu 68
- Call Forwarding menu 47
- Call meters menu 66
- Call related features menu 46
- Extended menu 11
- Messages menu 51
- Network selection menu 63
- Options menu 37
- Personalized menus 11
- Phone Book menu 38
- Phone setup menu 57
- Quick Access menu 69
- Send Messages menu 54
- Short menu 11

Message editor 54, 70
Message settings 55
Messages
- Call holding/call waiting messages 33
- Cell broadcast messages 52
- Creating and editing 52
- Reading SMS messages 52
- Sending SMS messages 54

Messages menu 51
My phone number(s) 43

N

Names
- Entering 39

Network search 64
Network selection menu 63
Networks
- Automatic search 64
- Finding new networks 65
- Preferred networks 65

New security code 60

O

One-touch dial setting 45
One-touch dialing 28
Options menu 37
Outgoing messages 54, 70

P

Pauses
- Inserting into phone numbers 29

Personal numbers 40
Personalized menu 11
Phone book
- Call number 41
- Deleting/erasing entries 41
- Dialing phone book numbers 29
- Modify name or number 41
- Preventing access to 42
- Storing numbers - see *Add Entry*

Phone calls
- Automatic redial 28
- Dialing phone book numbers 29
- Emergency calls 29
- Ending 30
- International 29
- Making 28
- One-touch dialing 28
- Receiving 30

Phone setup menu 57
Phone status 62
PIN code
- Entering 27
- Setting and changing 59

PIN2 code 60
Prevent access (to Phone Book) 42

angelsing.bk Page 87 Thursday, March 30, 2000 4:55 PM

Q

Quick access menu 69
  Customising 72

R

Reading SMS messages 52
Received messages 53
Receiving a phone call 30
Redialing the last number called 28
Removing your batteries 22
Require SIM card PIN 59
Restrict My Number 31
Restrict my phone number 47
Return call 53
Ring tones 58

S

Security code
  Changing 60
Select Phone Line 58
Sending SMS messages 54
Service center 55
Set in-call display 67
Set Message Alert Tone 58
Set Ringer Tone 58
Set Ringer Tone 2 58
Setup fixed dialing 44
Short menu 11
Short message service symbol 20
Show battery meter 46, 70
Show call timers 66, 70
Show Services 42
Signal strength symbol 20
SIM card
  Insertion/removal 25
  PIN code 27, 59
  PIN2 code 60
SMS messages 51
Special keys 19
Split Call 32
Status indicator
  Battery saving mode 61
Status review 62
Switch Calls 32
Symbols 20

T

Timers 67
Tones
  Setting ringer tones 58
Transfer Call 36
Troubleshooting 75, 83
Turn Mute On or Off 32

U

Unblocking your phone 60
Unconditional call forward 71
Unlock code
  Setting and changing 59

V

Voicemail
  Number 55
Volume
  Adjusting the earpiece and keypad volume 19
  Adjusting the ringer volume 58
  Buttons 19

W

What to do if... 75, 83