Moxa Industrial ZigBee Module SLEZ2150 User's Manual

First Edition, November 2011

www.moxa.com/product

Moxa Industrial ZigBee Module SLEZ2150 User's Manual

Copyright Notice

Trademarks

Disclaimer

Technical Support Contact Information

www.moxa.com/support

Moxa Americas
Toll-free: 1-888-669-2872
Tel: +1-714-528-6777
Fax: +1-714-528-6778

Moxa Europe
Tel: +49-89-3 70 03 99-0
Fax: +49-89-3 70 03 99-99

Moxa China (Shanghai office)
Toll-free: 800-820-5036
Tel: +86-21-5258-9955
Fax: +86-21-5258-5505

Moxa Asia-Pacific
Tel: +886-2-8919-1230
Fax: +886-2-8919-1231

Table of Contents

1

Introduction

The following topics are covered in this chapter:

- **Overview**
- **Features**
- **Specifications**

Overview

The SLEZ2150 module is designed to provide ZigBee communication for all ZigBee-device-based systems. It communicates via the standard 802.15.4 protocols. The SLEZ2150 uses the CC2530 chipset from TI. This module is connected to the main board through SMA connector and special circuitry to allow for compatibility with 3.3V PCI signaling.

Features

- Instant connection of any serial device to Zigbee network
- Secure data access with AES

Specifications

RF Data Rate	250 kbps
Outdoor/RF Line-of-Sight Range	130 m
Transmit Power	4.5 dBm (Max)
Receiver Sensitivity (1% PER)	-96 dBm
Adjustable Power	Yes
Frequency Band	2.4 GHz
Interference Immunity	DSSS (Direct Sequence Spread Spectrum)
PAN ID	0x0000~0xFFFF
Node ID	0x0000~0xFFFF
RF Channel	11-25 (15 channels)
Device Type	Coordinator, Router, End Device
Network Topology	Star, Mesh, Cluster
Security	ZigBee Certified
Operating Temperature	-40° C to +75° C
Power Requirement	3.3 V +/-10%

Information for the OEMs and Integrators

The following statement must be included with all versions of this document supplied to an OEM or integrator, but should not be distributed to the end user.

1) This device is intended for OEM integrators only.
2) The antenna must be installed such that 20cm is maintained between the antenna and users.
3) This module is applied for Limit Modular Approval in FCC. The module powered from Final Host or products shall in accordance with module manufacture requirement.
4) Please see the full Grant of Equipment document for other restrictions.

As long as 4 conditions above are met, further transmitter test will not be required. However, the OME integrator is still responsible for testing their end-product for any additional compliance requirements required with this module installed.

IMPORTANT NOTE:

In the event that these conditions **can not be met** (for example, the host power to module can't meet module manufacture requirement or co-location with another transmitter) then FCC authorization is no longer consider valid and the FCC ID **can not** be use on the final product. In these circumstances, the OEM integrator will be responsible for re-evaluating the end product (including the transmitter) and obtaining a separate FCC authorization.

2

Getting Started

This chapter covers the module layout, and block diagram, hardware installation of the SLEZ2150. Software installation is covered in the next chapter.

- **Module Layout**
- **Block Diagram**
- **Connector Locations**
- **Hardware Installation**
- **Software Installation**

Module Layout

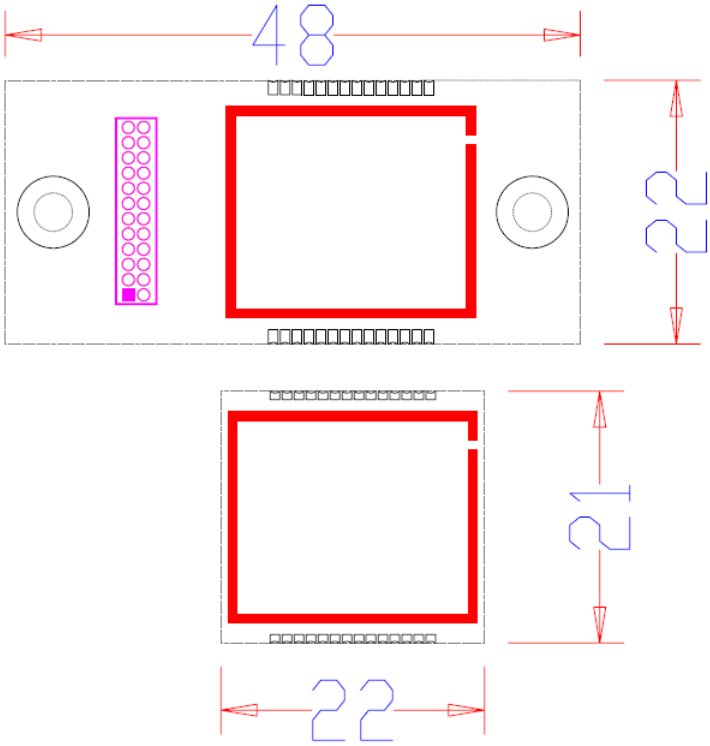

Block Diagram

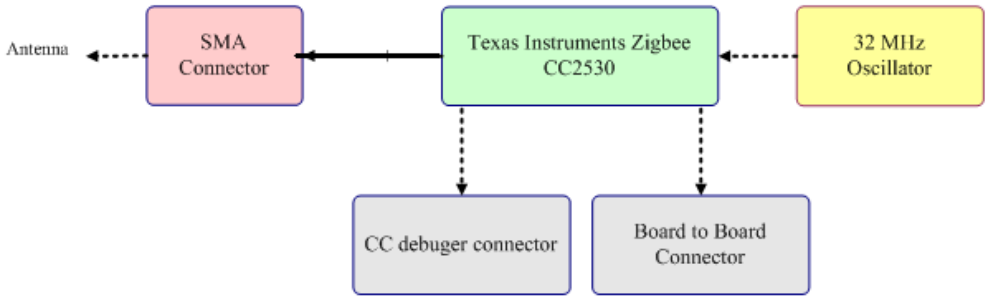

Connector Locations

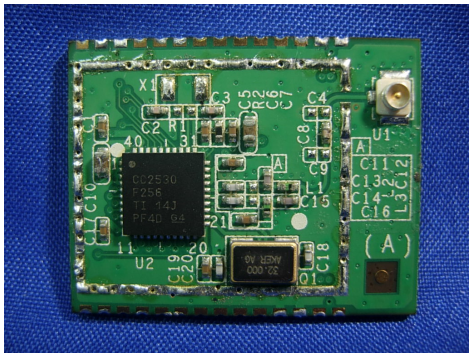

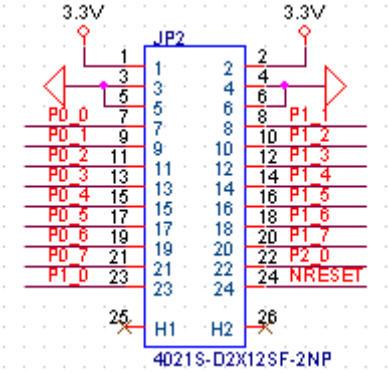

Hardware Installation

The ZigBee Module can be installed into all MOXA Zigbee system board series.

Steps for Installation

1. Attach the WLAN antenna to connector UI
2. Let ZigBee Module connect to NPort Z2150/3150
3. Screw on the ZigBee Module

Software Installation

After physically installing the SLEZ2150, the module will be recognized on the new system board after the following steps.

Steps for Installation

1. Apply power to the system board.

A

Regulatory Statements

Federal Communications Commission Interference Statement

This equipment has been tested and found to comply with the limits for a Class B digital device, pursuant to part 15 of the FCC Rules. These limits are designed to provide reasonable protection against harmful interference in a residential installation. This equipment generates, uses and can radiate radio frequency energy and, if not installed and used in accordance with the instructions, may cause harmful interference to radio communications. However, there is no guarantee that interference will not occur in a particular installation. If this equipment does cause harmful interference to radio or television reception, which can be determined by turning the equipment off and on, the user is encouraged to try to correct the interference by one or more of the following measures:

-Reorient or relocate the receiving antenna.
-Increase the separation between the equipment and receiver.
-Connect the equipment into an outlet on a circuit different from that to which the receiver is connected.
-Consult the dealer or an experienced radio/TV technician for help.

CAUTION:

Any changes or modifications not expressly approved by the grantee of this device could void the user's authority to operate the equipment.

Labeling requirements

This device complies with Part 15 of the FCC Rules. Operation is subject to the following two conditions: (1) this device may not cause harmful interference, and (2) this device must accept any interference received, including interference that may cause undesired operation.

End Product Labeling

This transmitter module is authorized only for use in device where the antenna may be installed such that 20cm may be maintained between the antenna and users. The final end product must be labeled in a visible area with the following: "Contains FCC ID: SLEZ2150”

RF exposure warning

This equipment must be installed and operated in accordance with provided instructions and the antenna(s) used for this transmitter must be installed to provide a separation distance of at least 20 cm from all persons and must not be co-located or operating in conjunction with any other antenna or transmitter. End-users and installers must be provide with antenna installation instructions and transmitter operating conditions for satisfying RF exposure compliance.

Antenna Requirement:
This radio transmitter has been approved by FCC to operate with the antenna types listed below with the maximum permissible gain and required antenna impedance for each antenna type indicated. Antenna types not included in this list, having a gain greater than the maximum gain indicated for that type, are strictly prohibited for use with this device.
Antenna Type: Dipole
Peak Gain:2.9dBi for 2.4 GHz