PRINTER'S INSTRUCTIONS:
INSTR,INSTL,CX-65; LINEAR P/N: 235121X2 - INK: BLACK; MATERIAL: 20# MEAD BOND; SIZE: 11.000" x 8.500"; SCALE: 1-1

CX-65

Alarm Transmitter

Installation Instructions

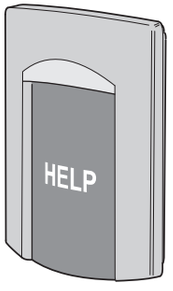

Linear®
Building On Innovation.
USA & Canada (800) 421-1587 & (800) 392-0123
(760) 438-7000 - Toll Free FAX (800) 468-1340
www.linearcorp.com

1. PRODUCT DESCRIPTION

The Model CX-65 is a water resistant, emergency alarm transmitter designed for use with Alert One Response Link format receivers. This transmitter features a large, easy to find, HELP button. An optional blank face aqua colored button is included for custom labeling or alternate uses. Pressing the button activates the transmitter and sends a digitally coded wireless signal to its companion receiver. **To insure sending a complete signal, press the transmitter button for a minimum of two seconds.**

The transmitter can be wall mounted using the integral snap-on mounting bracket, or simply be placed on a table. Four rubber "feet" are supplied for table-top use. The CX-65 is factory set to a unique code, so no field coding is required. The transmitter can send a signal for up to 3 seconds per activation. The green operation indicator lights when the transmitter is activated.

Every two hours the transmitter tests for low battery If the battery tests low, a low battery signal is sent to the receiver.

Each transmitter is sealed to provide water-resistance. The transmitter is powered by one 2032 "coin-cell" battery and must be disassembled to replace the battery.

Before system testing and operation, each transmitter must be programmed into its receiver. Refer to the receiver's or Console's instructions for details on programming transmitters into the system.

2. FEATURES

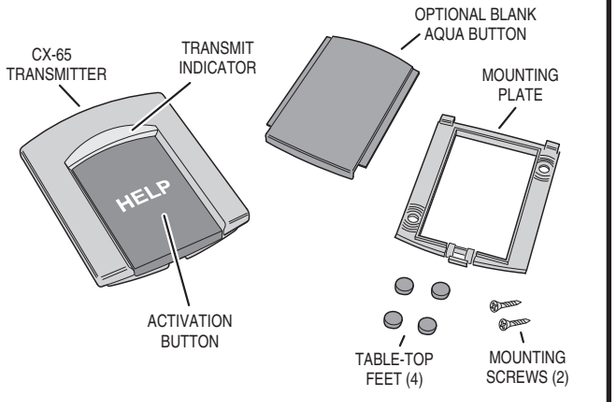

3. OPTIONAL WALL MOUNTING

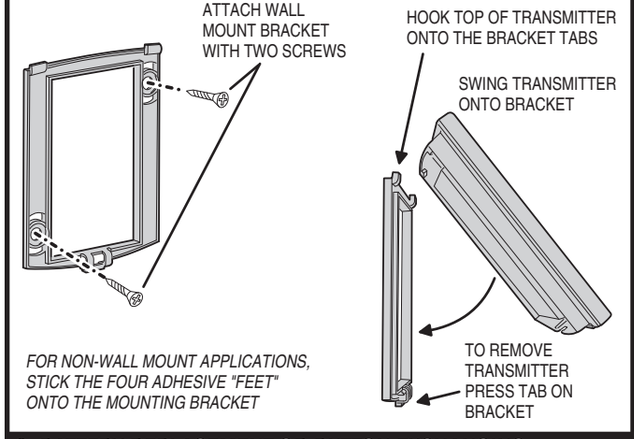

FOR NON-WALL MOUNT APPLICATIONS, STICK THE FOUR ADHESIVE "FEET" ONTO THE MOUNTING BRACKET

4. PROGRAM TRANSMITTER INTO RECEIVER

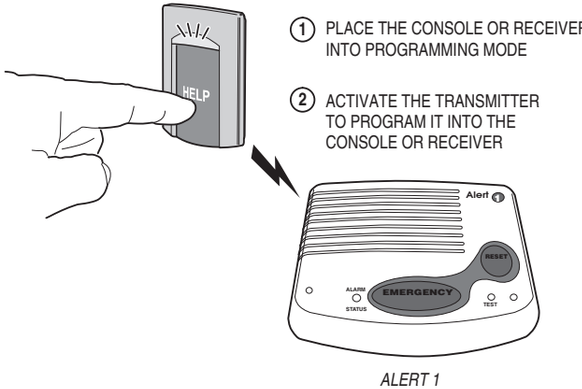

1. PLACE THE CONSOLE OR RECEIVER INTO PROGRAMMING MODE
2. ACTIVATE THE TRANSMITTER TO PROGRAM IT INTO THE CONSOLE OR RECEIVER

ALERT 1 CONSOLE

5.TESTING TRANSMITTER

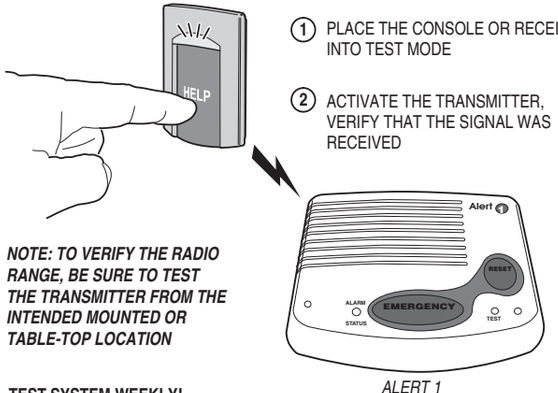

1. PLACE THE CONSOLE OR RECEIVER INTO TEST MODE
2. ACTIVATE THE TRANSMITTER, VERIFY THAT THE SIGNAL WAS RECEIVED

NOTE: TO VERIFY THE RADIO RANGE, BE SURE TO TEST THE TRANSMITTER FROM THE INTENDED MOUNTED OR TABLE-TOP LOCATION

TEST SYSTEM WEEKLY!

ALERT 1 CONSOLE

6. BATTERY REPLACEMENT OR BUTTON EXCHANGING

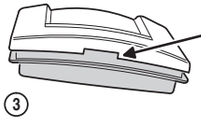

1. TWIST A COIN OR SCREWDRIVER IN THE SLOT ON TOP OF TRANSMITTER TO OPEN THE CASE
2. REMOVE THE CASE TOP, BUTTON, SILICONE SEAL, AND LIFT OUT THE TRANSMITTER CIRCUIT BOARD
3. REPLACE THE BATTERY WITH ONE TYPE MAXELL CR2032 200mA HR OR DURACELL DL2032 COIN-CELL BATTERY PLUS SIDE AWAY FROM THE CIRCUIT BOARD
4. RE-ASSEMBLE THE UNIT BY REVERSING THE STEPS
5. TEST THE TRANSMITTER AFTER RE-ASSEMBLING

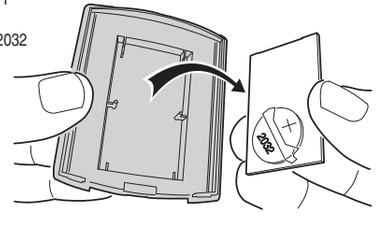

7. NOTES

LINEAR LIMITED WARRANTY

This Linear product is warranted against defects in material and workmanship for twelve (12) months. **This warranty extends only to wholesale customers** who buy direct from Linear or through Linear's normal distribution channels. Linear does not warrant this product to consumers. Consumers should inquire from their selling dealer as to the nature of the dealer's warranty, if any. **There are no obligations or liabilities on the part of Linear LLC for consequential damages arising out of or in connection with use or performance of this product or other indirect damages with respect to loss of property, revenue, or profit, or cost of removal, installation, or reinstallation.** All implied warranties, including implied warranties for merchantability and implied warranties for fitness, are valid only until the warranty expires. **This Linear LLC Warranty is in lieu of all other warranties express or implied.**

All products returned for warranty service require a Return Product Authorization Number (RPA#). Contact Linear Technical Services at 1-800-421-1587 for an RPA# and other important details.

IMPORTANT !!!

Linear radio controls provide a reliable communications link and fill an important need in portable wireless signaling. However, there are some limitations which must be observed.

- For U.S. installations only: The radios are required to comply with FCC Rules and Regulations as Part 15 devices. As such, they have limited transmitter power and therefore limited range.
- A receiver cannot respond to more than one transmitted signal at a time and may be blocked by radio signals that occur on or near their operating frequencies, regardless of code settings.
- Changes or modifications to the device may void FCC compliance.
- Infrequently used radio links should be tested regularly to protect against undetected interference or fault.
- A general knowledge of radio and its vagaries should be gained prior to acting as a wholesale distributor or dealer, and these facts should be communicated to the ultimate users.

Copyright © 2013 Linear LLC 235121 X2