Panasonic

Operating Instructions

Cordless Telephone with Bluetooth and Digital Answering Machine

Model No. **KX-TGL460**
KX-TGL462
KX-TGL463
KX-TG673SK

Model shown is KX-TGL460.

Before initial use, see "Getting Started" on page 10.

Thank you for purchasing a Panasonic product.
Please read these operating instructions before using the unit and save them for future reference.

Consulte "Guía Rápida Española", página 75.

For assistance, visit our Web site: **http://shop.panasonic.com/support** for customers in the U.S.A.

Please register your product: http://shop.panasonic.com/support

Table of Contents

Introduction
Model composition 3
Accessory information 3

Important Information
For your safety 6
Important safety instructions 7
For best performance 7
Other information 8
Specifications 9

Getting Started
Setting up 10
Controls 12
Display icons/Indicators 13
Language settings 14
Date and time 14
Recording your greeting message 14
Other settings 15

Link to Cell
Link to cell feature 16
Pairing a cellular phone 16
Link to cell settings 17

Making/Answering Calls
Making cellular calls 20
Making landline calls 20
Redial feature 21
Answering calls 21
Useful features during a call 22
Intercom 24

Call Block
Call block feature 26
Storing unwanted callers 26

Phonebook
Phonebook 29
Speed dial 31

Programming
Menu list 33
Alarm 40
Silent mode 41
Baby monitor 42
Other programming 43
Registering a unit 44

Caller ID Service
Using Caller ID service 45
Caller list 45

Using Bluetooth® Devices
Copying phonebook from a cellular phone (phonebook transfer) 48
Link to Cell app 49
Text message (SMS) alert 50
Alert settings for your DECT phone 50
Using a Bluetooth wireless headset (optional) for landline calls 51

Answering System for Landline
Answering system for landline 53
Turning the answering system on/off 53
Greeting message 53
Listening to messages 54
Advanced new message alerting features 55
Remote operation 57
Answering system settings 58

Useful Information
Voicemail service for landline 60
Wall mounting 61
Error messages 63
Troubleshooting 64
FCC and other information 72

Guía Rápida Española
Guía Rápida Española 75

Appendix
Customer services 85
Limited Warranty (ONLY FOR U.S.A.) 86

Index
Index.....88

TGL46x(en)_0925_ver002.pdf 2 2015/09/25 20:59:16

Model composition

Series	Model No.	Base unit	Handset	
		Part No.	Part No.	Quantity
KX-TGL460 series	KX-TGL460	KX-TGL460	KX-TGLA40	1
	KX-TGL462	KX-TGL460	KX-TGLA40	2
	KX-TGL463	KX-TGL460	KX-TGLA40	3
	KX-TG673SK	KX-TGL460	KX-TGLA40	3

Accessory information

Supplied accessories

No.	Accessory item/Part number	Quantity		
		KX-TGL460	KX-TGL462	KX-TGL463 KX-TG673SK
①	AC adaptor/PNLV226Z	1	1	1
②	Telephone line cord*1	1	1	1
③	Wall mounting adaptor*2	1	1	1
④	Rechargeable batteries*3	2	4	6
⑤	Handset cover*4, *5	1	2	3
⑥	Charger*6	–	1	2

*1 PQJA10075Y (Black cord), PQJA10075Z (Transparent cord)
*2 PNKL1061Z1 (Silver), PNKL1061xx (Metallic black)
*3 See page 4 for replacement battery information.
*4 The handset cover comes attached to the handset.
*5 PNYNTGLA40SR (Silver), PNYNTGLA40xx (Metallic black)
*6 PNLC1070ZS (Silver), PNLC1070xx (Metallic black)

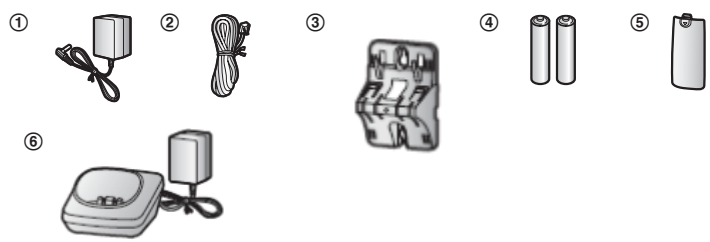

TGL46x(en)_0925_ver002.pdf 3 2015/09/25 20:59:16

Additional/replacement accessories

Please contact your nearest Panasonic dealer for sales information (page 85).

Accessory item	Model number/Specifications
Rechargeable batteries	HHR-4DPA*1 ● To order, please visit http://shop.panasonic.com/support
	Battery type: – Nickel metal hydride (Ni-MH) – 2 x AAA (R03) size for each handset
T-adaptor	KX-J66
Range extender	KX-TGA405*2
Key detector	KX-TGA20*3

*1 Replacement batteries may have a different capacity from that of the supplied batteries.
*2 By installing this unit, you can extend the range of your phone system to include areas where reception was previously not available. This product can be purchased online. Please visit our Web site: http://shop.panasonic.com/support
*3 By registering the key detector (4 max.) to a Panasonic Digital Cordless Phone and attaching it to an easy-to-lose item in advance, you can locate and find the mislaid item to which the key detector is attached. Please visit our Web site: http://www.panasonic.com/tga20

Other information

- Design and specifications are subject to change without notice.
- The illustrations in these instructions may vary slightly from the actual product.

Expanding your phone system

Handset (optional): KX-TGLA40	
You can expand your phone system by registering optional handsets (6 max.) to a single base unit. ● Optional handsets may be a different color from that of the supplied handsets.	

TGL46x(en)_0925_ver002.pdf 4 2015/09/25 20:59:16

Bluetooth® devices

You can expand your phone system by pairing the following units to a single base unit.

Your Bluetooth cellular phone[*1]**:** 2 max. (for cellular calls: page 16)	
Your Bluetooth headset[*1]**:** 1 max. (for a wireless hands-free conversation: page 51)	

*1 Your cellular phone and headset must be Bluetooth wireless technology compatible. For more details and the list of compatible cellular phones, please visit our Web site: www.panasonic.com/link2cell

Trademarks

- The Bluetooth® word mark and logos are registered trademarks owned by Bluetooth SIG, Inc., and any use of such marks by Panasonic Corporation is under license.
- iPhone is a registered trademark of Apple Inc.
- Android is a trademark of Google Inc.
- Gmail, Google Calendar are trademarks of Google Inc.
- Facebook is trademark of Facebook, Inc.
- Twitter is trademark of Twitter Inc.
- Instagram is trademark of Instagram, Inc.
- BlackBerry® is owned by Research In Motion Limited and is registered in the United States and may be pending or registered in other countries. Panasonic is not endorsed, sponsored, affiliated with or otherwise authorized by Research In Motion Limited.
- All other trademarks identified herein are the property of their respective owners.

TGL46x(en)_0925_ver002.pdf 5 2015/09/25 20:59:16

For your safety

To prevent severe injury and loss of life/ property, read this section carefully before using the product to ensure proper and safe operation of your product.

⚠WARNING

Power connection

- Use only the power source marked on the product.
- Do not overload power outlets and extension cords. This can result in the risk of fire or electric shock.
- Completely insert the AC adaptor/power plug into the power outlet. Failure to do so may cause electric shock and/or excessive heat resulting in a fire.
- Regularly remove any dust, etc. from the AC adaptor/power plug by pulling it from the power outlet, then wiping with a dry cloth. Accumulated dust may cause an insulation defect from moisture, etc. resulting in a fire.
- Unplug the product from power outlets if it emits smoke, an abnormal smell, or makes an unusual noise. These conditions can cause fire or electric shock. Confirm that smoke has stopped emitting and contact us at http://shop.panasonic.com/support
- Unplug from power outlets and never touch the inside of the product if its casing has been broken open.
- Never touch the plug with wet hands. Danger of electric shock exists.

Installation

- To prevent the risk of fire or electrical shock, do not expose the product to rain or any type of moisture.
- Do not place or use this product near automatically controlled devices such as automatic doors and fire alarms. Radio waves emitted from this product may cause such devices to malfunction resulting in an accident.
- Do not allow the AC adaptor or telephone line cord to be excessively pulled, bent or placed under heavy objects.

Operating safeguards

- Unplug the product from power outlets before cleaning. Do not use liquid or aerosol cleaners.
- Do not disassemble the product.
- Do not spill liquids (detergents, cleansers, etc.) onto the telephone line cord plug, or allow it to become wet at all. This may cause a fire. If the telephone line cord plug becomes wet, immediately pull it from the telephone wall jack, and do not use.

Medical

- Consult the manufacturer of any personal medical devices, such as pacemakers or hearing aids, to determine if they are adequately shielded from external RF (radio frequency) energy. (The product operates in the frequency range of 1.92 GHz to 1.93 GHz, and the RF transmission power is 115 mW (max.).)
- Do not use the product in health care facilities if any regulations posted in the area instruct you not to do so. Hospitals or health care facilities may be using equipment that could be sensitive to external RF energy.

⚠CAUTION

Installation and location

- Never install telephone wiring during an electrical storm.
- Never install telephone line jacks in wet locations unless the jack is specifically designed for wet locations.
- Never touch uninsulated telephone wires or terminals unless the telephone line has been disconnected at the network interface.
- Use caution when installing or modifying telephone lines.
- The AC adaptor is used as the main disconnect device. Ensure that the AC outlet is installed near the product and is easily accessible.

TGL46x(en)_0925_ver002.pdf 6 2015/09/25 20:59:16

- This product is unable to make calls when:
  - the handset batteries need recharging or have failed.
  - there is a power failure.

Battery

- We recommend using the batteries noted on page 4. **USE ONLY rechargeable Ni-MH batteries AAA (R03) size.**
- Do not mix old and new batteries.
- Do not open or mutilate the batteries. Released electrolyte from the batteries is corrosive and may cause burns or injury to the eyes or skin. The electrolyte is toxic and may be harmful if swallowed.
- Exercise care when handling the batteries. Do not allow conductive materials such as rings, bracelets, or keys to touch the batteries, otherwise a short circuit may cause the batteries and/or the conductive material to overheat and cause burns.
- Charge the batteries provided with or identified for use with this product only, in accordance with the instructions and limitations specified in this manual.
- Only use a compatible base unit (or charger) to charge the batteries. Do not tamper with the base unit (or charger). Failure to follow these instructions may cause the batteries to swell or explode.

Attention:

A nickel metal hydride battery that is recyclable powers the product you have purchased.
Please call 1-800-8-BATTERY (1-800-822-8837) for information on how to recycle this battery.

Important safety instructions

When using your product, basic safety precautions should always be followed to reduce the risk of fire, electric shock, and injury to persons, including the following:

1. Do not use this product near water for example, near a bathtub, washbowl, kitchen sink, or laundry tub, in a wet basement or near a swimming pool.
2. Avoid using a telephone (other than a cordless type) during an electrical storm. There may be a remote risk of electric shock from lightning.
3. Do not use the telephone to report a gas leak in the vicinity of the leak.
4. Use only the power cord and batteries indicated in this manual. Do not dispose of batteries in a fire. They may explode. Check with local codes for possible special disposal instructions.

SAVE THESE INSTRUCTIONS

For best performance

Base unit location/avoiding noise

The base unit and other compatible Panasonic units use radio waves to communicate with each other.

- For maximum coverage and noise-free communications, place your base unit:
  - at a convenient, high, and central location with no obstructions between the handset and base unit in an indoor environment.
  - away from electronic appliances such as TVs, radios, personal computers, wireless devices, or other phones.
  - facing away from radio frequency transmitters, such as external antennas of mobile phone cell stations. (Avoid putting the base unit on a bay window or near a window.)
- Coverage and voice quality depends on the local environmental conditions.

TGL46x(en)_0925_ver002.pdf 7 2015/09/25 20:59:16

- If the reception for a base unit location is not satisfactory, move the base unit to another location for better reception.

Environment

- Keep the product away from electrical noise generating devices, such as fluorescent lamps and motors.
- The product should be kept free from excessive smoke, dust, high temperature, and vibration.
- The product should not be exposed to direct sunlight.
- Do not place heavy objects on top of the product.
- When you leave the product unused for a long period of time, unplug the product from the power outlet.
- The product should be kept away from heat sources such as heaters, kitchen stoves, etc. It should not be placed in rooms where the temperature is less than 0 °C (32 °F) or greater than 40 °C (104 °F). Damp basements should also be avoided.
- The maximum calling distance may be shortened when the product is used in the following places: Near obstacles such as hills, tunnels, underground, near metal objects such as wire fences, etc.
- Operating the product near electrical appliances may cause interference. Move away from the electrical appliances.

Routine care

- **Wipe the outer surface of the product with a soft moist cloth.**
- Do not use benzine, thinner, or any abrasive powder.

Other information

CAUTION: Risk of explosion if battery is replaced by an incorrect type. Dispose of used batteries according to the instructions.

Notice for product disposal, transfer, or return

- This product can store your private/ confidential information. To protect your privacy/confidentiality, we recommend that you erase information such as phonebook or caller list entries from the memory before you dispose of, transfer, or return the product.

Notice

- This product is designed for use in the United States of America. Sale or use of this product in other countries may violate local laws.
- Cet appareil est conçu pour être utilisé aux États-Unis d'Amérique. La vente ou l'emploi de cet appareil dans certains autres pays peut constituer une infraction à la législation locale.
- Este producto está diseñado para usarse en los Estados Unidos de América. La venta o el empleo de este producto en ciertos países puede constituir violación de la legislación local.
- 本產品專為美國使用而設。若在其他國家銷售或使用，可能會違反當地法例。
- この製品は、日本国外での使用を目的として設計されており、日本国内での使用は法律違反となります。従って、当社では日本国内においては 原則として修理などのサービスは致しかねます。

TGL46x(en)_0925_ver002.pdf 8 2015/09/25 20:59:16

Specifications

- **Standard:**
  DECT 6.0 (Digital Enhanced Cordless Telecommunications 6.0)
  Bluetooth wireless technology 2.1
- **Frequency range:**
  1.92 GHz to 1.93 GHz (DECT)
  2.402 GHz to 2.48 GHz (Bluetooth)
- **RF transmission power:**
  115 mW (max.)
- **Power source:**
  120 V AC, 60 Hz
- **Power consumption:**
  Base unit:
  Standby: Approx. 1.1 W
  Maximum: Approx. 4.0 W
  Charger:
  Standby: Approx. 0.1 W
  Maximum: Approx. 1.8 W
- **Operating conditions:**
  0 °C – 40 °C (32 °F – 104 °F), 20 % – 80 % relative air humidity (dry)

TGL46x(en)_0925_ver002.pdf 9 2015/09/25 20:59:16

Setting up

Connections

- If you do not connect the telephone line cord and use only cellular lines, set the cellular line only mode to use this unit more conveniently (page 18).

■ **Base unit**

① Connect the AC adaptor to the unit by pressing the plug firmly.
② Fasten the cord by hooking it.
③ Connect the AC adaptor to the power outlet.
④ Connect the telephone line cord to the unit, then to the single-line telephone jack (RJ11C) until you hear a click.
⑤ A DSL/ADSL filter (not supplied) is required if you have a DSL/ADSL service.

Note:

- Use only the supplied Panasonic AC adaptor PNLV226.

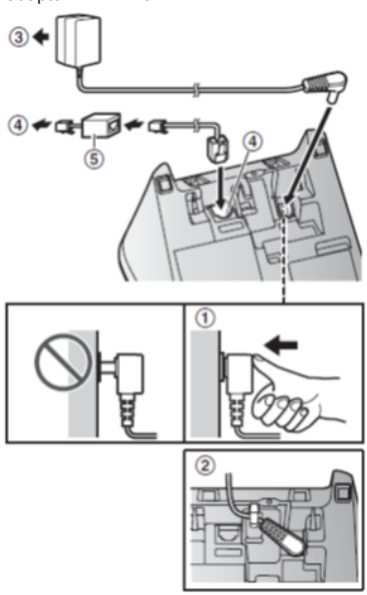

■ **Charger**

① Connect the AC adaptor to the power outlet.

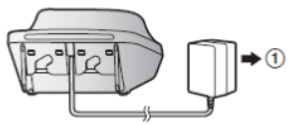

Battery installation

- USE ONLY rechargeable Ni-MH batteries AAA (R03) size (Ⓐ).
- Do NOT use alkaline/manganese/Ni-Cd batteries.
- Confirm correct polarities (⊕, ⊖).

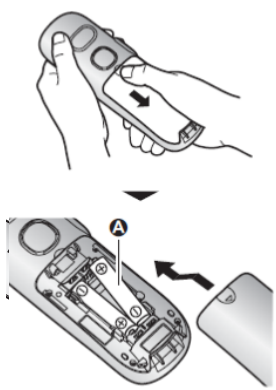

- Follow the directions on the display to set up the unit.

TGL46x(en)_0925_ver002.pdf 10 2015/09/25 20:59:16

Battery charging

Charge for about 7 hours.

- Confirm **"Charging"** is displayed (Ⓐ).
- When the batteries are fully charged, **"Fully charged"** is displayed.

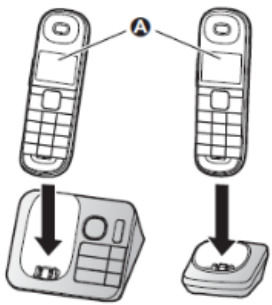

Note when setting up

Note for connections

- The AC adaptor must remain connected at all times. (It is normal for the adaptor to feel warm during use.)
- The AC adaptor should be connected to a vertically oriented or floor-mounted AC outlet. Do not connect the AC adaptor to a ceiling-mounted AC outlet, as the weight of the adaptor may cause it to become disconnected.

During a power failure

The unit cannot be used to make or receive calls during a power failure. We recommend connecting a corded-type telephone that does not use an AC adaptor to your telephone line.

Note for battery installation

- Use the supplied rechargeable batteries. For replacement, we recommend using the Panasonic rechargeable batteries noted on page 4, 7.

Note for battery charging

- It is normal for the handset to feel warm during charging.
- Clean the charge contacts of the handset, base unit, and charger with a soft and dry cloth once a month. Before cleaning the unit, disconnect from power outlets and any telephone line cords. Clean more often if the unit is exposed to grease, dust, or high humidity.

Battery level

Icon	Battery level
	High
	Medium
	Low
	Needs charging.
	Empty

Panasonic Ni-MH battery performance (supplied batteries)

Operation	Operating time
In continuous use	12 hours max.*1
Not in use (standby)	8 days max.*1

*1 If eco mode is on.

Note:

- Actual battery performance depends on usage and ambient environment.

Intelligent eco mode

This feature automatically reduces handset power consumption by suppressing handset transmission power when the handset is close to the base unit.

- When this feature is activated, **ECO** is displayed. However, during a cellular call, **ECO** is not displayed even though this feature is activated.
- Eco mode is turned off when the clarity booster is activated (page 22).

TGL46x(en)_0925_ver002.pdf 11 2015/09/25 20:59:16

Controls

Handset

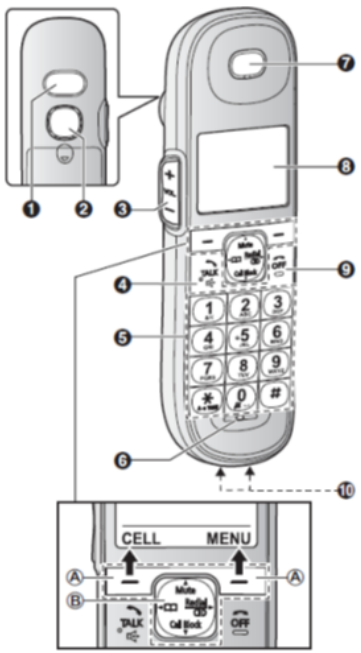

■ **Control type**

Ⓐ **Soft keys**

By pressing a soft key, you can select the feature shown directly above it on the display. After a cellular phone is paired, **【CELL】** is displayed.

Ⓑ **Navigator key**

– **【▲】**, **【▼】**, **【◄】**, or **【►】**: Scroll through various lists and items.
– **【▲】** Mute: Put the call on mute.
– **【◄】** 📖: View the phonebook entry.
– **【►】** Redial/CID (Caller ID): View the redial list or caller list.
– **【▼】** Call Block: View the call block list.

Base unit

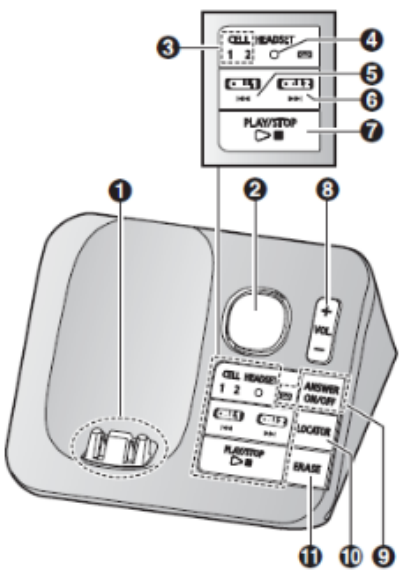

TGL46x(en)_0925_ver002.pdf 12 2015/09/25 20:59:16

Display icons/Indicators

Handset display items

Item	Meaning
	Within base unit range
	Out of base unit range
	The landline is in use. ● When flashing: The call is put on hold. ● When flashing rapidly: An incoming call is now being received.
C1 C2	A cellular line is in use.*1 ● When flashing: The cellular call is put on hold. ● When flashing rapidly: A cellular call is being received.
ECO	Eco mode is on.*2 (page 11)
	A cellular phone is connected.*1 Ready to make/receive cellular calls. ● When turned off: A cellular phone is not connected to the base unit. (page 18)
C1 C2	– A cellular call is in progress on that line. – The cellular line is selected for the setting.
NR	Noise reduction is set. (page 23)
EQ	Equalizer is set. (page 23)
	Speakerphone is on. (page 20)
L	Ringer volume is off.*3 (page 35, 37)
	Silent mode is on. (page 41)
PRIV.	Call sharing mode is off. (page 39)
	Alarm is on. (page 40)
1	Handset number
	Battery level
	Blocked call (page 26)
BOOST	Clarity booster is on.*2 (page 22)
	Baby monitor is activated. The name/number displayed next to the icon indicates the monitoring unit. (page 42)
`In use`	Answering system is being used by another handset.
`Cell1 in use`	Someone is using the corresponding line.
`Cell2 in use`	
`C1&C2 in use`	
`Line in use`	

*1 Corresponding lines (1, 2: cellular line) are indicated next to the item.
*2 During a cellular call, the item is not displayed even though the feature is activated.
*3 Corresponding lines (1, 2: cellular line, L: landline) are indicated next to the item. If all lines are turned off, no line is indicated.

TGL46x(en)_0925_ver002.pdf 13 2015/09/25 20:59:16

CELL indicators on the base unit

The CELL indicators show each cellular line status.

Status	Meaning
On	A cellular phone is connected. Ready to make/receive cellular calls.
Flashing	– The cellular line is in use. – Phonebook entries are being copied from a cellular phone (page 48). – The base unit is searching for the paired cellular phone. – The base unit is pairing a cellular phone. – A cellular call is put on hold.
Flashing rapidly	A cellular call is being received.
Light off	– A cellular phone is not paired to the base unit. – A cellular phone is not connected to the base unit (page 18).

Language settings

Display language

You can select either "**English**" or "**Español**" as the display language. The default setting is "**English**".

1 【MENU】#110
2 【▲▼】: Select the desired setting. → 【SAVE】 → 【OFF】

Voice announcement language

You can select either "**English**" or "**Español**" as the voice announcement language of the following features:
– the answering system
– the Talking Caller ID
The default setting is "**English**".

1 【MENU】#112
2 【▲▼】: Select the desired setting.
3 【SAVE】 → 【OFF】

Date and time

1 【MENU】#101
2 Enter the current month, date, and year by selecting 2 digits for each.
Example: July 12, 2016
07 12 16
3 【OK】
4 Enter the current hour and minute (12-hour clock format) by selecting 2 digits for each.
Example: 9:30
09 30
5 ✱: Select "**AM**" or "**PM**".
6 【SAVE】 → 【OFF】

Note:
- When English is selected as the display language, 12-hour clock format is used. When Spanish is selected, 24-hour clock format is used.

Recording your greeting message

You can record your own greeting message instead of using a pre-recorded greeting message. See page 53 for details.

1 【MENU】#302
2 【▲▼】: "**Yes**" → 【SELECT】
3 Record a greeting message. → 【STOP】 → 【OFF】

TGL46x(en)_0925_ver002.pdf 14 2015/09/25 20:59:16

Other settings

Dialing mode

If you cannot make calls, change this setting according to your telephone line service. The default setting is **"Tone"**.
"Tone": For tone dial service.
"Pulse": For rotary/pulse dial service.

1 **[MENU]**#120
2 **[▲▼]**: Select the desired setting.
3 **[SAVE]** → **[OFF]**

TGL46x(en)_0925_ver002.pdf 15 2015/09/25 20:59:17

Link to cell feature

You can connect your base unit and cellular phone using Bluetooth wireless technology, so that you can make or answer cellular calls using your phone system. This allows you to:
– use the unit to talk on cellular calls even if some areas of your home have poor cellular reception, simply by placing your cellular phone in an area with good reception.
– talk on cellular calls even if your cellular phone is in your pocket or bag.
– enjoy cordless cellular calls even if your cellular phone plugged in and charging.

Important:

- Your cellular phone must support the Hands Free Profile (HFP) specification.
- You may pair 2 cellular phones and 1 headset.
- The unit can be used to talk on 2 lines at the same time (for example, 2 cellular lines, or the landline and 1 cellular line).
- Only 2 Bluetooth devices can be used with the unit at the same time (for example, 2 cellular lines, or the headset and 1 cellular line).
- Locate your cellular phone near the base unit. If the cellular phone is too close to the base unit during a cellular call, you may hear noise. For best performance, we recommend placing the cellular phone between 0.6 m to 3 m (2 feet to 10 feet) away from the base unit.

Pairing a cellular phone

Important:

- For more details and the list of compatible cellular phones, please visit our Web site: www.panasonic.com/link2cell
- Before pairing a Bluetooth enabled cellular phone to the base unit, make sure that no other Bluetooth device such as a Bluetooth headset is connected to your cellular phone.

1 **Base unit:**
Press and hold **【CELL 1】** or **【CELL 2】** for a few seconds.
- After the corresponding CELL indicator on the base unit starts flashing, the rest of the procedure must be completed within 5 minutes.

2 **Your cellular phone:**
While the corresponding CELL indicator is flashing, follow the instructions of your cellular phone to enter the pairing mode.
- Depending on your cellular phone, it may ask you to enter the Bluetooth PIN (default: **"0000"**).
- The PassKey is not shown on the base unit, but you can proceed operations by following the directions on your cellular phone.

3 **Base unit:**
Wait until a long beep sounds.
- It may take more than 10 seconds to complete pairing.
- When the corresponding CELL indicator lights up, the cellular phone is connected to the base unit. You are ready to make cellular calls.

Note:

- If the cellular phone has already registered to the base unit, it is overwritten.
- Make sure that your cellular phone is set to connect to this product automatically. Refer to your cellular phone's operating instructions.
- Make sure you cancel your cellular phone's current pairing if you want to pair it to the other line (page 16).
- The default setting for the alert feature is **"On"**, so when you pair your cellular phone to the base unit, this feature may be activated (page 50). (This depends on the version and type of cellular phone you are using.)

Unpairing a cellular phone

You can cancel the pairing of a cellular phone that is stored in the base unit.

1 For CELL 1: **【MENU】**#611
For CELL 2: **【MENU】**#612

TGL46x(en)_0925_ver002.pdf 16 2015/09/25 20:59:17

2 **[▲▼]**: **"Yes"** → **[SELECT]**
- When the cellular phone is unpaired, the CELL indicator is turned off.

3 **[OFF]**

Link to cell settings

Selecting which unit receives cellular calls

You can select which unit rings and receives calls for a cellular line. When **"All"** is selected, all handsets and the base unit ring.

1 For CELL 1: **[MENU]**#621
For CELL 2: **[MENU]**#622

2 **[▲▼]**: Select the desired handset or **"All"**. → **[SAVE]** → **[OFF]**

Note:

- When you select a specific handset to receive calls for a cellular line, other handsets cannot answer the calls.
- When you change to **"All"** from another setting, the base unit ringer volume also returns to the lowest level even if the ringer volume was changed.
- The units selected with this setting have the alert feature (page 50) applied to them.

Ring as cell mode

Once this feature is turned on, the handset and base unit ring using the same ringer tone as your cellular phone.
The following settings are available:
– **"Off"**: Turn this feature off to use the ringer tones of the handset and base unit. Caller information is announced depending on the Talking Caller ID setting (page 37).
– **"On (with Talking CID)"** (default): The handset and base unit use your cellular phone's ringer tone. Caller information is announced even if the Talking Caller ID is turned off.
– **"On (without Talking CID)"**: The handset and base unit use your cellular phone's ringer tone. Caller information is not announced even if the Talking Caller ID is turned on.

Important:

- To use this feature, your cellular phone must support Bluetooth in-band ringtone. Refer to your cellular phone's operating instructions.

1 For CELL 1: **[MENU]**#6141
For CELL 2: **[MENU]**#6142

2 **[▲▼]**: Select the desired setting.

3 **[SAVE]** → **[OFF]**

Note:

- The units use the preset ringer tones instead of your cellular phone's ringer tone when a cellular call is being received if:
  – your cellular phone is in silent mode (depending on your cellular phone).
  – the base unit is in use.
  – 2 handsets are sharing a landline call.
- If your cellular phone is in silent mode with **"On (with Talking CID)"** set, the unit announces caller information even when Talking Caller ID is turned off (page 37).

To use the handset ringer tone instead of your cellular phone's ringer tone

Select **"Off"** in step 2, "Ring as cell mode", page 17.
To change the handset ringer tone for a cellular line, see page 35.

Auto connection to the Bluetooth devices (cellular phones)

After pairing, your Bluetooth devices are connected to the base unit. If you move the Bluetooth devices out of base unit range, the Bluetooth devices are disconnected from the base unit. This feature allows the base unit to try to reconnect the Bluetooth devices at regular intervals when it returns within base unit range. You can set the interval. The default setting is **"1 min"**.

TGL46x(en)_0925_ver002.pdf 17 2015/09/25 20:59:17

Important:

- When 3 Bluetooth devices (2 cellular phones and 1 headset) are paired to the base unit, only 2 Bluetooth devices can be used with the unit at the same time, and the base unit loses its connection from other Bluetooth devices. To automatically resume the connection to Bluetooth devices, leave the auto connection on.
- Some cellular phones lose connection after usage, please check the specifications of your cellular phone for more details.

1 **【MENU】**#632

2 **【▲▼】**: Select the desired setting.

3 **【SAVE】** → **【OFF】**

Note:

- Some cellular phones may ask you if you accept the connection requirement from the base unit. In that case, select **"Off"** in step 2. Check the specifications of your cellular phone.

Connecting/disconnecting the cellular phone manually

If you will not be using the paired cellular phone's link to cell feature temporarily (for example, you do not want the unit to ring when your cellular line receives a call), you can disconnect your cellular phone from the base unit. If you want to use it again, reconnect the cellular phone to the base unit.

Note:

- After you disconnect a paired cellular phone from the base unit manually, it will automatically be connected to the base unit in 30 minutes. If you do not use the link to cell feature anymore, unpair the cellular phone (page 17).
- A disconnected cellular phone is not unpaired from the base unit, so pairing it to the base unit again is unnecessary.

1 **To connect/disconnect:**
For CELL 1: **【MENU】**#6251
For CELL 2: **【MENU】**#6252
- A long beep sounds.

2 **【OFF】**

Cellular line only mode (If you do not use the landline)

If you do not use the landline, we recommend setting the unit to the cellular line only mode. The default setting is **"Off"**.

Important:

- If you turn on the **"Cell line only mode"**, disconnect the telephone line cord from the base unit. Otherwise the **"Cell line only mode"** cannot be activated.

1 **【MENU】**#157

2 **To turn on:**
【▲▼】: "On" → **【SELECT】** → **【▲▼】**: **"Yes"** → **【SELECT】**
To turn off:
【▲▼】: "Off" → **【SELECT】**

Note:

- Once you set this mode, you can use the following buttons to make cellular calls for the handset, press **【/】** instead of **【CELL】** (page 20).
- Once you set this mode, the following features cannot be used:
  - Landline features (page 40)
  - Answering system (page 53)
    Messages cannot be received.
  - Voicemail features (page 60)
- After this mode is turned on or off, the base unit reboots.
  - Bluetooth connections from cellular phones or headset are disconnected. If the auto connection is turned on (page 17), the cellular phones are reconnected.
  - will be displayed on the handset momentarily. The handset can be used once is displayed.

When you use the landline again

Before connecting the telephone line to the base unit, select **"Off"** in step 2, "Cellular line only mode (If you do not use the landline)", page 18.

TGL46x(en)_0925_ver002.pdf 18 2015/09/25 20:59:17

Cellular line selection

This feature determines which cellular line is selected to make cellular calls when:
– you press **【CELL】** on the handset.
– you press **【 /】** on the handset while the cellular line only mode is turned on.

The following settings are available:
– **"Manual"** (handset only: default): You can select the desired cellular line when making a call.
– **"Cellphone 1"***1 (base unit default): CELL 1 is selected.
– **"Cellphone 2"***1: CELL 2 is selected.

1 **【MENU】#6334**

2 **【▲▼】**: Select the desired setting. → **【SAVE】** → **【OFF】**

*1 After the Bluetooth device is paired, the device name is displayed.

Storing your area code (for dialing only a 7-digit phone number to make a local call)

You need to add your area code when making cellular calls to a phone number in your area. Once you store your area code, it is automatically added to the beginning of the 7-digit phone number when making cellular calls.

1 **【MENU】#6333**

2 Enter the 3-digit area code.
- To correct a digit, press **【CLEAR】**.

3 **【SAVE】** → **【OFF】**

Changing the Bluetooth PIN (Personal Identification Number)

The PIN is used to pair cellular phones to the base unit. The default PIN is **"0000"**. To prevent unauthorized access to this product, we recommend that you change the PIN, and keep it confidential.

Important:

- Please make note of your new PIN. The unit does not reveal the PIN to you. If you forget your PIN, see page 71.

1 **【MENU】#6119**
- If the unit prompts you to enter the old PIN (when the default has been changed), enter the current 4-digit PIN.

2 Enter the new 4-digit PIN. → **【OK】**

3 Enter the new 4-digit PIN again. → **【SAVE】** → **【OFF】**

TGL46x(en)_0925_ver002.pdf 19 2015/09/25 20:59:17

Making cellular calls

Important:

- The unit can be used to talk on 2 lines at the same time (for example, 2 cellular lines, or the landline and 1 cellular line).
- Only 2 Bluetooth devices can be used with the unit at the same time (for example, 2 cellular lines, or the headset and 1 cellular line).
- Before making calls, confirm that the corresponding $\bigstar_2^1$ on the handset is displayed (page 13).

1 Lift the handset and dial the phone number.
- To correct a digit, press **【CLEAR】**.

2 **【CELL】**
- The unit starts dialing when:
  - only 1 cellular phone is paired.
  - a specific line is set to make cellular calls (page 19).

Go to step 4.

3 **【▲】**/**【▼】**: Select the desired cellular phone. → **【SELECT】**

4 When you finish talking, press **【OFF】** or place the handset on the base unit or charger.

Note:

- In step 1, you can store the dialed phone number to the phonebook by pressing and holding **【◄】** 📖 for a few seconds.
- To switch to the speaker, press **【📞/🔊】**. To switch back to the receiver, press **【📞/🔊】**.

Adjusting the receiver or speaker volume

Press **【+】** or **【−】** repeatedly while talking.

Note:

- The receiver or speaker volume you set is kept for each line (landline and cellular lines).

Making landline calls

1 Lift the handset and dial the phone number.
- To correct a digit, press **【CLEAR】**.

2 Press **【📞/🔊】** to use the receiver.

3 When you finish talking, press **【OFF】** or place the handset on the base unit or charger.

Note:

- In step 1, you can store the dialed phone number to the phonebook by pressing **【SAVE】**.

Using the speakerphone

1 Dial the phone number and press and hold **【📞/🔊】** for a few seconds.

2 When you finish talking, press **【OFF】**.

Note:

- To switch back to the receiver, press **【📞/🔊】**.

Pause (for PBX/long distance service users)

A pause is sometimes required when making calls using a PBX or long distance service. When storing a calling card access number and/or PIN in the phonebook, a pause is also needed (page 31).
Example: If you need to dial the line access number “9” when making outside calls with a PBX:

1 9 → **【▲】** (Pause)

2 Dial the phone number. → **【📞/🔊】**

Note:

- A 3.5 second pause is inserted each time **【▲】** (Pause) is pressed.

TGL46x(en)_0925_ver002.pdf 20 2015/09/25 20:59:17

Redial feature

Making a call using the redial list

The last 20 phone numbers dialed are displayed in the redial list (each 48 digits max.) according to the redial mode setting.

1 **[►]** Redial/CID
- If there is a call which is not answered, **"Missed call"** is displayed. To switch to the redial list, press **[►]** Redial/CID again.

2 **[▲▼]**: Select the desired entry.

3 ■ **To make a cellular call**
① **[CELL]**
- The unit starts dialing when:
  – only 1 cellular phone is paired.
  – a specific line is set to make cellular calls (page 19).

② **[▲▼]**: Select the desired cellular phone. → **[SELECT]**

■ **To make a landline call**
[/]

Redial mode

The unit can display the redial list in one of the following 2 ways by programming.
– **"Most dialed"** (default): The unit shows the phone numbers in descending order of frequency of the recent calls after the latest call.
– **"Recent dialed"**: The unit shows the phone numbers in order of time.

1 **[►]** Redial/CID
- If there is a call which is not answered, **"Missed call"** is displayed. To switch to the redial list, press **[►]** Redial/CID again.

2 **[▲▼]**: Select the desired entry. → **[MENU]**

3 **[▲▼]**: **"Recent dialed"** → **[SELECT]**

4 **[▲▼]**: Select the desired setting. → **[SAVE]** → **[OFF]**

Note:
- When **"Most dialed"** in redial mode (page 21) is selected and you make calls to the same phone number plural times, the number of times (example: x5) is displayed for that entry.

Erasing a number in the redial list

1 **[►]** Redial/CID
- If there is a call which is not answered, **"Missed call"** is displayed. To switch to the redial list, press **[►]** Redial/CID again.

2 **[▲▼]**: Select the desired entry. → **[MENU]**

3 **[▲▼]**: **"Erase"** → **[SELECT]**

4 **[▲▼]**: **"Yes"** → **[SELECT]** → **[OFF]**

Answering calls

1 When the unit rings, lift the handset:
To answer a call using the receiver, press **[/]**.
To answer a call using the speakerphone, press and hold **[/]** for a few seconds.
- To answer a cellular call, you can also press **[CELL]**.

2 When you finish talking, press **[OFF]** or place the handset on the base unit or charger.

Any key answer: You can answer the call by pressing any dial key.
Auto talk: You can answer calls simply by lifting the handset (page 39).
Temporary handset ringer off: You can turn the ringer off temporarily by pressing and holding **0** for a few seconds.

Adjusting the ringer volume

Handset

Press **[+]** or **[−]** repeatedly to select the desired volume.
- To turn the ringer off, press **[−]** repeatedly.

TGL46x(en)_0925_ver002.pdf 21 2015/09/25 20:59:17

Base unit

Press 【+】 or 【−】 repeatedly to select the desired volume.

- To turn the ringer off, press and hold 【−】 until the unit beeps.

Note:

- The ringer volume you set is kept for each line (landline and cellular lines).

Useful features during a call

Hold

1 Press 【MENU】 during an outside call.

2 【▲▼】: "Hold" → 【SELECT】

3 **To release hold on the cellular line:**
Press 【CELL】.*1

- Another handset user can take the call by pressing 【CELL】.*1

*1 If you press 【CELL】 and the selection list is displayed, select the desired cellular line and press 【SELECT】.

To release hold on the landline:
Press 【 /】.

- Another handset user can take the call by pressing 【 /】.

Note:

- After holding for 10 minutes, the call is disconnected.

Mute

1 Press 【▲】 Mute during a call.

2 To return to the call, press 【▲】 Mute.

Flash for landline calls

Flash button allows you to use the special features of your host PBX such as transferring an extension call, or accessing optional telephone services.

Note:

- To change the flash time, see page 39.

For call waiting or Call Waiting Caller ID service users

To use call waiting or Call Waiting Caller ID, you must first subscribe with your phone service provider.
This feature allows you to receive calls while you are already talking on the phone. If you receive a call while on the phone, you will hear a call waiting tone.
If you subscribe to both Caller ID and Call Waiting with Caller ID services, the 2nd caller's information is displayed on the unit that is in use after you hear the call waiting tone.

1 Press 【ACCEPT】 to answer the 2nd call.

2 To switch between calls, press 【FLASH】.

Note:

- 【ACCEPT】 and 【FLASH】 are soft keys visible on the display during a call.
- Please contact your phone service provider for details and availability of this service in your area.

Temporary tone dialing for landline calls (for rotary/pulse service users)

Press ✱ (TONE) before entering access numbers which require tone dialing.

Handset clarity booster

This feature can improve sound clarity when the handset is used in an area where there may be interference. During an outside call, this feature is turned on automatically when necessary.

- When this feature is turned on, BOOST is displayed. However, during a cellular call, BOOST is not displayed even though the feature is activated.

TGL46x(en)_0925_ver002.pdf 22 2015/09/25 20:59:17

Handset noise reduction

This feature allows you to hear the voice of the person you are talking to more clearly, by reducing the surrounding noise coming from the other party's telephone.

1 Press **[MENU]** while talking.

2 **[▲▼]**: "Noise reduction on" or "Noise reduction off" → **[SELECT]**

Note:

- The setting you made is kept for each line (landline and cellular lines).
  The default settings are as follows:
  – for landline: "Noise reduction off"
  – for cellular lines: "Noise reduction on"
- Depending on the environment where this handset is being used, this feature may not be effective.
- This feature is not available while using the speakerphone.

Handset equalizer

This feature clarifies the voice of the person you are talking to, producing a more natural-sounding voice that is easier to hear and understand.

1 Press **[MENU]** while talking.

2 **[▲▼]**: "Equalizer" → **[SELECT]**

3 **[▲▼]**: Select the desired setting.

4 Press **[OK]** to exit.

Note:

- The setting you made is kept for each line (landline and cellular lines).
- Depending on the condition and quality of your telephone line, this feature may emphasize existing line noise. If it becomes difficult to hear, turn this feature off.
- This feature is not available while using the speakerphone.
- When both the "Equalizer" setting and noise reduction are activated, NR is shown on the display.

Call share

You can join an existing outside call.

■ **While another unit is on a cellular call:**

1 To join the conversation, press **[CELL]**.
- You can join the conversation when:
  – only 1 cellular phone is paired.
  – a specific line is set to make cellular calls (page 19).

2 **[▲▼]**: Select the corresponding cellular phone. → **[SELECT]**

■ **While another unit is on a landline call:**
To join the conversation, press **[/]**.

Note:

- A maximum of 3 parties (including 1 outside party) can join a conversation using 2 extensions. **(3-way conference)**
- To prevent other users from joining your conversations with outside callers, turn call sharing mode off (page 39).

Transferring calls, conference calls

Outside calls can be transferred or a conference call with an outside party can be made between 2 handsets.

1 During an outside call, press **[MENU]**.

2 **[▲▼]**: "Intercom" → **[SELECT]**

3 **[▲▼]**: Select the desired unit. → **[SELECT]**

4 Wait for the paged party to answer.
- If the paged party does not answer, press **[BACK]** to return to the outside call.

5 **To complete the transfer:**
Press **[OFF]**.
To establish a conference call:
[MENU] → **[▲▼]**: "Conference" → **[SELECT]**
- To leave the conference, press **[OFF]**. The other 2 parties can continue the conversation.
- To put the outside call on hold: **[MENU]** → **[▲▼]**: "Hold" → **[SELECT]**

TGL46x(en)_0925_ver002.pdf 23 2015/09/25 20:59:17

To resume the conference: **[MENU]** → **[▲▼]**: **"Conference"** → **[SELECT]**

- To cancel the conference: **[MENU]** → **[▲▼]**: **"Stop conference"** → **[SELECT]**
  You can continue the conversation with the outside caller.

Transferring a cellular call between the handset and a cellular phone

Transferring a cellular call from the handset to a cellular phone

1. Press **[MENU]** during a cellular call.
2. **[▲▼]**: **"Transfer to cell"** → **[SELECT]**
   - The cellular call is transferred to the cellular phone.

Note:

- Depending on your cellular phone type, you may need to set the cellular phone to be ready to talk before transferring. For example, if your cellular phone has a top cover, open it beforehand.

Transferring a cellular call from a cellular phone to the handset

During a conversation using a cellular phone, the call cannot be transferred to the handset by the cellular phone. Perform the following with the handset.

1. During a conversation using a cellular phone, press **[CELL]**.
   - The call is transferred to the handset when:
     – only 1 cellular phone is paired.
     – a specific line is set to make cellular calls (page 19).
2. **[▲▼]**: Select the corresponding cellular phone. → **[SELECT]**
   - The call is transferred to the handset.

Answering a 2nd call

If you receive a call while talking on the phone, the interrupt tone sounds (page 37) and the 2nd caller's information is displayed if you subscribe to Caller ID service (page 45).

Answering a 2nd call during a landline call

1. Press **[MENU]** during a landline call.
2. **[▲▼]**: **"Hold"** → **[SELECT]**
3. **To answer the 2nd call:**
   Press **[CELL]** while the 2nd call is being received.
4. To hang up the 2nd call and return to the 1st call (landline call), press **[OFF]**, then press **[/]**.

Answering a 2nd call during a cellular call

1. Press **[MENU]** during a cellular call.
2. **[▲▼]**: **"Hold"** → **[SELECT]**
3. **To answer the 2nd call:**
   Press **[/]** or **[CELL]** while the 2nd call is being received.
4. To hang up the 2nd call and return to the 1st call (cellular call), press **[OFF]**, then press **[CELL]**.*1

*1 If you press **[CELL]** and the selection list is displayed, select the desired cellular line and press **[SELECT]**.

Intercom

Intercom calls can be made between handsets.

Note:

- When paging unit(s), the paged unit(s) beeps for 1 minute.
- If you receive an outside call while talking on the intercom, the interrupt tone sounds (page 37).

TGL46x(en)_0925_ver002.pdf 24 2015/09/25 20:59:17

To answer the call with the handset, press **【OFF】**, then press the corresponding line key.

- To change the ringer volume and ringer tone for intercom, see page 37.

Making an intercom call

1 **【MENU】** → **【▲▼】**: **"Intercom"** → **【SELECT】**

2 **【▲▼】**: Select the desired unit or **"Voice paging"** → **【SELECT】**
- **If you select "Voice paging":** When you speak into the microphone after beep, all handsets are paged by your voice. The voice paging is continued until someone answers the call or you finish the call.

3 When you finish talking, press **【OFF】**.

Note:

- You can also use the **【INTERCOM】** soft key, if displayed, to make intercom calls.
- While the other units are in use when you try to use the voice paging, the system is busy. Try again later.

Answering an intercom call

1 Press **【/】** to answer the page.

2 When you finish talking, press **【OFF】**.

Turning auto intercom on/off

This feature allows the handset to answer intercom calls automatically when it is called. You do not need to press **【/】**. When this feature is set to **"On"**, the monitoring handset for the baby monitor feature (page 43) will also answer baby monitor calls automatically. The default setting is **"Off"**.

1 **【MENU】**#273

2 **【▲▼】**: Select the desired setting. → **【SAVE】** → **【OFF】**

TGL46x(en)_0925_ver002.pdf 25 2015/09/25 20:59:17

Call block feature

You can press the 【▼】 Call Block key in the following situations to disconnect the current call and add a phone number to the call block list:
– when an incoming call is being received
– when an incoming call is being recorded by the answering system
– when talking on an outside call

Once a phone number has been added to the call block list, the unit will block calls from that phone number in the future.

1 Press 【▼】 Call Block under the situations shown above.

2 Confirm the call block number and press 【YES】.
- The call block number is stored in the call block list, **"Caller blocked"** is displayed, and then the call is disconnected.

Note:
- If the call has no phone number, the call is blocked but it is not stored in the call block list.
- The call block feature is not available:
  – for intercom calls or calls received by call waiting.
  – when a landline call (or cellular call) is being received during a cellular call (or landline call).
- Blocked calls are logged in the caller list.

Storing unwanted callers

The unit can block calls by storing the desired items in the call block list beforehand (Caller ID subscribers only).
– **"Block a single number"**: The unit blocks calls from specific phone numbers stored in the call block list.
– **"Block range of numbers"**: The unit blocks calls that begin with a number stored in the call block list, such as a toll-free phone number prefix or certain area codes.
– **"Block unknown CID"**: The unit blocks calls that have no phone number.

Single phone numbers and ranges of numbers can be stored in the call block list up to 250 items in total.

Blocking unwanted callers:
When a call is received, the unit rings briefly*1 while caller information is being received.
If the caller's phone number matches an entry in the call block list, the unit emits no sound to the caller, and disconnects the call.

*1 If you do not want this one ring to sound, select **"No"** in "Setting not to ring once for blocked call" (page 27).

Storing a single phone number

Important:
- We recommend storing 10 digits (including the area code). If only 7 digits are stored, all numbers that have the same last 7 digits will be blocked.

Adding call blocked numbers from the caller list

■ **When a cellular phone is paired:**

1 【►】 Redial/CID
- If the redial list is displayed, press 【►】 Redial/CID again to switch to the caller list.

2 【▲▼】: Select the desired entry to be blocked. → 【SELECT】
- To edit the number:
  Press ⊠ (Edit) repeatedly until the phone number is shown in the 10-digit format. → 【SAVE】 → 【▲▼】 **"Call block"** → 【SELECT】 → Go to step 5.

3 【SAVE】

4 【▲▼】: **"Call block"** → 【SELECT】

5 【▲▼】: **"Yes"** → 【SELECT】

6 Edit the phone number if necessary (24 digits max.).

7 【SAVE】 → 【OFF】

■ **When a cellular phone is not paired:**

1 【►】 Redial/CID
- If the redial list is displayed, press 【►】 Redial/CID again to switch to the caller list.

TGL46x(en)_0925_ver002.pdf 26 2015/09/25 20:59:17

2 【▲▼】: Select the desired entry to be blocked. → 【MENU】
- To edit the number: 【▲▼】: "Edit" → 【SELECT】
  Press 【EDIT】 repeatedly until the phone number is shown in the 10-digit format. → 【SAVE】 → "Call block" → 【SELECT】 → Go to step 4.

3 【▲▼】: "Save call block" → 【SELECT】

4 【▲▼】: "Yes" → 【SELECT】

5 Edit the phone number if necessary (24 digits max.).

6 【SAVE】 → 【OFF】

Adding call blocked numbers manually

1 【▼】 Call Block

2 【▲▼】: "Block a single number" → 【SELECT】

3 【MENU】 → 【▲▼】: "Add" → 【SELECT】

4 Enter the phone number (24 digits max.).

5 【SAVE】 → 【OFF】

Storing a range of number

1 【▼】 Call Block

2 【▲▼】: "Block range of numbers" → 【SELECT】

3 【MENU】 → 【▲▼】: "Add" → 【SELECT】

4 Enter the desired number (2-8 digits).

5 【SAVE】 → 【OFF】

Blocking incoming calls that have no phone number

You can block calls when no phone number is provided, such as private callers or out of area calls.

1 【▼】 Call Block

2 【▲▼】: "Block unknown CID" → 【SELECT】

3 【▲▼】: Select the desired setting. → 【SAVE】 → 【OFF】

Setting not to ring once for blocked call

If you do not want the unit to sound one ring for calls from phone numbers stored in the call block list, select "No". The default setting is "Yes".

1 【▼】 Call Block

2 【▲▼】: "One ring for blocked call" → 【SELECT】

3 【▲▼】: Select the desired setting. → 【SAVE】 → 【OFF】

Viewing/editing/erasing call block numbers

1 【▼】 Call Block

2 【▲▼】: "Block a single number" or "Block range of numbers" → 【SELECT】

3 【▲▼】: Select the desired entry.
- After viewing, press 【OFF】 to exit.

4 **To edit a number:**
【EDIT】 → Edit the number. → 【SAVE】 → 【OFF】

To erase a number:
【ERASE】 → 【▲▼】: "Yes" → 【SELECT】 → 【OFF】

Note:

- When editing, press the desired dial key to add digits and press 【CLEAR】 to erase digits.

Erasing all call block numbers

1 【▼】 Call Block

2 【▲▼】: "Block a single number" or "Block range of numbers" → 【SELECT】

3 【MENU】 → 【▲▼】: "Erase all" → 【SELECT】

4 【▲▼】: "Yes" → 【SELECT】

TGL46x(en)_0925_ver002.pdf 27 2015/09/25 20:59:17

5 【▲▼】: “Yes” → 【SELECT】 → 【OFF】

TGL46x(en)_0925_ver002.pdf 28 2015/09/25 20:59:17

Phonebook

You can add 3,000 names (16 characters max.) and phone numbers (24 digits max.) to the phonebook, and assign each phonebook entry to the desired group (page 30). The following groups are available:
– Group 1: **"Home"**[*1] (default)
– Group 2: **"Cell 1"**[*1]
– Group 3: **"Cell 2"**[*1]
– Group 4-9: You can change the group name for each group.
*1 For groups 1-3, the group names cannot be changed.

Important:

- All entries can be shared by any registered handset.
- You can copy phonebook entries from a Bluetooth cellular phone to the unit's phonebook (page 48).

Adding phonebook entries

1 **[◄]** 🕮 → **[MENU]**
2 **[▲▼]**: **"Add new entry"** → **[SELECT]**
3 Enter the party's name. → **[OK]**
4 Enter the party's phone number. → **[OK]**
5 **[▲▼]**: Select the desired group. → **[SELECT]** 2 times → **[OFF]**

Note:

- In step 3, you can switch the language for entering characters:
  # → **[▲▼]**: Select the desired language. → **[OK]**

To enter the characters

Press a key on which the characters are printed repeatedly until the desired character is displayed.
The following keys are used when entering characters.

Key	Operation
[✱]	Switch between the uppercase and lowercase (A → a)
[◄] [►]	Move the cursor
[CLEAR]	Erase the character or number ● To erase all, press and hold it.

- To enter another character that is located on the same dial key, first press **[►]** to move the cursor to the next space.
- If you do not press any dial key within 2 seconds after entering a character, the character is fixed and the cursor moves to the next space.

Storing a redial list number to the phonebook

Phone numbers of up to 24 digits can be stored in the phonebook.

1 **[►]** Redial/CID
  - If there is a call which is not answered, **"Missed call"** is displayed. To switch to the redial list, press **[►]** Redial/CID again.
2 **[▲▼]**: Select the desired entry. → **[MENU]**
3 **[▲▼]**: **"Save"** → **[SELECT]**
4 To store the name, continue from step 3, "Editing entries", page 31.

Storing caller information to the phonebook

■ **When a cellular phone is paired:**

1 **[►]** Redial/CID
  - If the redial list is displayed, press **[►]** Redial/CID again to switch to the caller list.
2 **[▲▼]**: Select the desired entry. → **[SELECT]**
  - To edit the number, press ✱ (Edit) repeatedly until the phone number is shown in the desired format.
3 **[SAVE]**
4 **[▲▼]**: **"Phonebook"** → **[SELECT]**

TGL46x(en)_0925_ver002.pdf 29 2015/09/25 20:59:17

5 Continue from step 3, “Editing entries”, page 31.

■ **When a cellular phone is not paired:**

1 **【►】** Redial/CID
- If the redial list is displayed, press **【►】** Redial/CID again to switch to the caller list.

2 **【▲▼】**: Select the desired entry. → **【MENU】**
- To edit the number:
  【▲▼】: **“Edit”** → **【SELECT】**
  Press **【EDIT】** repeatedly until the phone number is shown in the desired format. And then, press **【SAVE】**. Go to step 3.

3 **【▲▼】**: **“Save phonebook”** → **【SELECT】**

4 Continue from step 3, “Editing entries”, page 31.

Groups

Groups can help you find entries in the phonebook quickly and easily. You can change the group name for groups 4-9 (“Friends”, “Family”, etc.). By assigning different ringer tones for different groups of callers, you can identify who is calling (ringer ID), if you have subscribed to Caller ID service.

Changing group names/setting ringer ID

1 **【◄】** 🕮 → **【MENU】**

2 **【▲▼】**: **“Group”** → **【SELECT】**

3 **【▲▼】**: Select the desired group. → **【SELECT】**
- If you selected **“Home”**, **“Cell 1”**, or **“Cell 2”**, go to step 5.

4 **To change group names**
【▲▼】: **“Group name”** → **【SELECT】** → Edit the name (10 characters max.). → **【SAVE】**

5 **To set group ringer tone**
【▲▼】: Select the current setting of the group ringer tone. → **【SELECT】** → **【▲▼】**: Select the desired ringer tone. → **【SAVE】**

6 **【OFF】**

Finding and calling from a phonebook entry

Once you have found the desired entry using one of the following 4 methods, make a call with your unit.

■ **Using a cellular line:**

1 **【CELL】**
- The unit starts dialing when:
  – only 1 cellular phone is paired.
  – a specific line is set to make cellular calls (page 19).

2 **【▲▼】**: Select the desired cellular phone. → **【SELECT】**

■ **Using a landline:**

【 /🔊**】**

Scrolling through all entries

1 **【◄】** 🕮

2 **【▲▼】**: Select the desired entry.

Searching by first character

1 **【◄】** 🕮

2 Press the dial key (0 – 9 or #) which contains the character you are searching for (page 29).

3 **【▲▼】**: Scroll through the phonebook if necessary.

Searching by query

You can narrow down the search to enter the first characters of a name.

1 **【◄】** 🕮 → ✳

2 To search for the name, enter the first characters (up to 4) in uppercase (page 29).

3 **【OK】**

4 **【▲▼】**: Scroll through the phonebook if necessary.

TGL46x(en)_0925_ver002.pdf 30 2015/09/25 20:59:18

Searching by group

1 【◄】📖
2 【GROUP】
3 【▲▼】: Select the group you want to search. → 【SELECT】
   - If you select "All groups", the unit ends the group search.
4 【▲▼】: Select the desired entry.

Editing entries

1 Find the desired entry (page 30).
2 【MENU】→【▲▼】: "Edit" → 【SELECT】
3 Edit the name if necessary. → 【OK】
4 Edit the phone number if necessary. → 【OK】
5 【▲▼】: Select the desired group (page 30). → 【SELECT】 2 times → 【OFF】

Erasing entries

Erasing an entry

1 Find the desired entry (page 30).
2 【MENU】→【▲▼】: "Erase" → 【SELECT】
3 【▲▼】: "Yes" → 【SELECT】→【OFF】

Erasing all entries

1 【◄】📖 → 【MENU】
2 【▲▼】: "Erase all" → 【SELECT】
3 【▲▼】: Select the desired group. → 【SELECT】
4 【▲▼】: "Yes" → 【SELECT】
5 【▲▼】: "Yes" → 【SELECT】→【OFF】

Chain dial

This feature allows you to dial phone numbers in the phonebook while you are on a call. This feature can be used, for example, to dial a calling card access number or bank account PIN that you have stored in the phonebook, without having to dial manually.

1 During an outside call, press 【◄】📖.
2 【▲▼】: Select the desired entry.
3 Press 【CALL】 to dial the number.

Note:

- When storing a calling card access number and your PIN in the phonebook as one phonebook entry, press 【▲】 (Pause) to add pauses after the number and PIN as necessary (page 20).
- If you have rotary/pulse service, you need to press ✱ (TONE) before pressing 【◄】📖 in step 1 to change the dialing mode temporarily to tone. When adding entries to the phonebook, we recommend adding ✱ (TONE) to the beginning of phone numbers you wish to chain dial (page 29).

Speed dial

You can assign 1 phone number to each of the dial keys (1 to 9) on the handset.

Adding phone numbers to speed dial keys

■ **By entering phone numbers:**

1 Press and hold the desired speed dial key (1 to 9). → 【ADD】
2 【▲▼】: "Manual" → 【SELECT】
3 Enter the party's name (16 characters max.). → 【OK】
4 Enter the party's phone number (24 digits max.). → 【OK】
5 【SELECT】→【OFF】

■ **From the phonebook:**

1 Press and hold the desired speed dial key (1 to 9). → 【ADD】
2 【▲▼】: "Phonebook" → 【SELECT】
3 【▲▼】: Select the desired entry.
4 【SAVE】→【OFF】

TGL46x(en)_0925_ver002.pdf 31 2015/09/25 20:59:18

Editing an entry

1 Press and hold the desired speed dial key (1 to 9). → **【MENU】**

2 **【▲▼】**: **"Edit"** → **【SELECT】**

3 Edit the name if necessary. → **【OK】**

4 Edit the phone number if necessary. → **【OK】**

5 **【SELECT】** → **【OFF】**

Erasing an entry

1 Press and hold the desired speed dial key (1 to 9). → **【MENU】**

2 **【▲▼】**: **"Erase"** → **【SELECT】**

3 **【▲▼】**: **"Yes"** → **【SELECT】** → **【OFF】**

Viewing an entry/Making a call

■ **Using a cellular line:**

1 Press and hold the desired speed dial key (1 to 9).

2 **【CELL】**
- The unit starts dialing when:
  - only 1 cellular phone is paired.
  - a specific line is set to make cellular calls (page 19).

3 **【▲▼】**: Select the desired cellular phone. → **【SELECT】**

■ **Using a landline:**

1 Press and hold the desired speed dial key (1 to 9).

2 To make a call, press **【/】**.

TGL46x(en)_0925_ver002.pdf 32 2015/09/25 20:59:18

Menu list

To access the features, there are 2 methods.

■ **Scrolling through the display menus**

1. **【MENU】**
2. Press **【▼】** or **【▲】** to select the desired main menu. → **【SELECT】**
3. Press **【▼】** or **【▲】** to select the desired item from the next sub-menus. → **【SELECT】**
4. Press **【▼】** or **【▲】** to select the desired setting. → **【SAVE】**

■ **Using the direct command code**

1. **【MENU】** → Enter the desired code.
   Example: Press **【MENU】**#10 1.
2. Select the desired setting. → **【SAVE】**

Note:

- To exit the operation, press **【OFF】**.
- In the following table, < > indicates the default settings.
- In the following table, ☞ indicates the reference page number.
- Display menu order and sub-menu may vary depending on your model.

Display menu tree and direct command code table

Main menu: 📖 "Phonebook"

Operation	Code	☞
Viewing the phonebook entry.	**#280**	30

Main menu: 📞 "Caller list"

Operation	Code	☞
Viewing the caller list.	**#213**	45

Main menu: 📼 "Answering device"

Sub-menu 1	Sub-menu 2	Settings	Code	☞
Play new message	–	–	**#323**	54
Play all message	–	–	**#324**	54
Erase all message*1	–	–	**#325**	55
Greeting	Record greeting*1	–	**#302**	53
	Check greeting	–	**#303**	54
	Pre-recorded*1 (Reset to pre-recorded greeting)	–	**#304**	54

TGL46x(en)_0925_ver002.pdf 33 2015/09/25 20:59:18

Sub-menu 1	Sub-menu 2	Settings	Code	☞
New message alert[*1]	Outgoing call – On/Off	On <Off>	#338	56
	Outgoing call – Notification to	–		
	Outgoing call – Remote code	Activate <Inactivate>		
	Base unit beep	On <Off>	#339	55
Settings	Ring count[*1]	Toll saver 2-7 rings <4 rings>	#211	58
	Recording time[*1]	<3 min> 1 min Greeting only[*2]	#305	59
	Remote code[*1]	<111>	#306	57
	Screen call	<On> Off	#310	58
Answer on[*1]	–	–	#327	53
Answer off[*1]	–	–	#328	53

Main menu: ✉ "Voicemail access"[*3]

Operation	Code	☞
Listening to voicemail messages.	#330	60

Main menu: 🔊 "Intercom"

Operation	Code	☞
Paging the desired unit.	#274	24

TGL46x(en)_0925_ver002.pdf 34 2015/09/25 20:59:18

Main menu: “Bluetooth”

Sub-menu 1	Sub-menu 2	Settings	Code	☞
Link to cell – 1:Add new device[*4] (for CELL 1) – 2:Add new device[*4] (for CELL 2)	Connect[*1]/ Disconnect[*1]	–	**#6251**[*5] **#6252**[*6]	18
	Ringer volume – Handset	Off–6 <6>	**#6281**[*5] **#6282**[*6]	21
	Ringer volume – Base unit[*1]	Off–6 <1>	**#✱6281**[*5] **#✱6282**[*6]	
	Ringer tone[*7]	<Tone 2>[*5] <Tone 4>[*6]	**#6291**[*5] **#6292**[*6]	–
	Select unit to ring[*1]	Handset 1-6 <All>	**#6271**[*5] **#6272**[*6]	17
	Ring as cell (limited)[*1]	<On (with Talking CID)> On (without Talking CID) Off	**#6141**[*5] **#6142**[*6]	17
	Alert settings[*1] – Alert On/Off	<On> Off	**#6101**[*5] **#6102**[*6]	50
	Alert settings[*1] – Voice alert	<On> Off	**#6031**[*5] **#6032**[*6]	50
	Alert settings[*1, *8] – Alert tone	<Tone 1>[*5] <Tone 2>[*6]	**#6041**[*5] **#6042**[*6]	50
	Pair	–	**#6241**[*5] **#6242**[*6]	16
	Unpair	–	**#6111**[*5] **#6112**[*6]	16
Phonebook transfer	–	–	**#618**	48
Headset	Add new device[*4]	–	**#621**	51
	Connect[*1]/ Disconnect[*1]	–	**#622**	51
	Pair	–	**#621**	51
	Unpair	–	**#612**	51

TGL46x(en)_0925_ver002.pdf 35 2015/09/25 20:59:18

Sub-menu 1	Sub-menu 2	Settings	Code	☞
Settings	Auto connect*1	Off <1 min> 3 min 5 min 10 min	#632	17
	Cell area code*1	–	#633	19
	Cell line only mode*1	On <Off>	#157	18
	Cell line select	<Manual> Cellphone 1*4 Cellphone 2*4	#634	19
	Set PIN*1	<0000>	#619	19
	International code*1	–	#117	48
	Country code*1	–	#118	
	Trunk prefix*1	–	#119	

Main menu: ◴ “Set date & time”

Sub-menu 1	Sub-menu 2	Settings	Code	☞
Date and time*1	–	–	#101	14
Memo alarm	Alarm1–3	<Off> Once Daily Weekly	#720	40
Time adjustment*1, *9	–	<Caller ID auto> Manual	#226	–

Main menu: ⁂ “Speed dial”

Operation	Code	☞
Viewing the speed dial entry.	#261	31

TGL46x(en)_0925_ver002.pdf 36 2015/09/25 20:59:18

Main menu: “Settings”

Sub-menu 1	Sub-menu 2	Settings	Code	☞
Ring adjustments	Ringer volume (Incoming)*3 – Handset	Off–6 <6>	#160	–
	Ringer volume (Incoming) – Base unit*1	Off–6 <1>	#✱160	–
	Intercom ringer volume (Handset)	Off–6 <6>	#175	–
	Ringer tone (Incoming)*3, *7, *10 (Handset)	<Tone 1>	#161	–
	Intercom ringer tone*3, *7, *10 (Handset)	<Tone 3>	#163	–
	Interrupt tone*11	<On> Off	#201	24
	Silent mode – On/Off	On <Off>	#238	41
	Silent mode – Start/End	<11:00 PM/06:00 AM>	#237	41
	Silent mode – Select group	Home Cell 1 Cell 2 Group 4-9	#241	41
Set date & time	Date and time*1	–	#101	14
	Memo alarm – Alarm1–3	<Off> Once Daily Weekly	#720	40
	Time adjustment*1, *9	<Caller ID auto> Manual	#226	–
Talking caller ID	Handset	<On> Off	#162	45
	Base unit*1	On <Off>	#✱162	

TGL46x(en)_0925_ver002.pdf 37 2015/09/25 20:59:18

Sub-menu 1	Sub-menu 2	Settings	Code	☞
Key detector setting*12 – 1:Add new device (for Detector1)*13 – 2:Add new device (for Detector2) – 3:Add new device (for Detector3) – 4:Add new device (for Detector4)	Change name*1	Detector1	#6561	–
		Detector2*14	#6562*14	
		Detector3*14	#6563*14	
		Detector4*14	#6564*14	
	Registration	–	#6571	–
			#6572*14	
			#6573*14	
			#6574*14	
	Deregistration	–	#6581	–
			#6582*14	
			#6583*14	
			#6584*14	
Call block*1	Block a single number	–	#217	26
	Block range of numbers	–		27
	Block unknown CID (CID: Caller ID)	Block <Unblock>	#240	27
	One ring for blocked call	<Yes> No	#173	27
Speed dial	–	–	#261	31
Record greeting*1	–	–	#302	53
Voicemail*3	Save VM access#*1 (VM: Voicemail)	–	#331	60
	VM tone detect*1	<On> Off	#332	60
LCD contrast (Display contrast)	–	Level 1–4 <2>	#145	–
Handset name	–	–	#104	43
Display name	–	On <Off>	#105	44
Redial mode	–	<Most dialed> Recent dialed	#659	xx
Auto intercom	–	On <Off>	#273	25
Key tone	–	<On> Off	#165	–

TGL46x(en)_0925_ver002.pdf 38 2015/09/25 20:59:18

Sub-menu 1	Sub-menu 2	Settings	Code	☞
Caller ID edit (Caller ID number auto edit)	–	<On> Off	#214	46
Auto talk*15	–	On <Off>	#200	21
Set tel line*3	Set dial mode*1	<Tone> Pulse	#120	15
	Set flash time*1, *16	80 ms 90 ms 100 ms 110 ms 160 ms 200 ms 250 ms 300 ms 400 ms 600 ms <700 ms> 900 ms	#121	22
	Set line mode*1, *17	A <B>	#122	–
Call sharing*1	–	<On> Off	#194	23, xx
Registration	Register handset	–	#130	44
	Deregistration*2	–	#131	44
Change language	Display	<English> Español	#110	14
	Announcement*1	<English> Español	#112	14

Main menu: ? “Customer support”

Operation	Code	☞
Displaying customer support Web address.	#680	–

Main menu: “Baby monitor”

Sub-menu 1	Sub-menu 2	Settings	Code	☞
On/Off	–	On <Off>	#268	42
Sensitivity level	–	Low <Middle> High	#269	43

TGL46x(en)_0925_ver002.pdf 39 2015/09/25 20:59:18

Main menu: “Key detector”*12

Sub-menu 1	Sub-menu 2	Settings	Code	☞
Search	–	–	#655	–
Battery check	–	–		

*1 If you program these settings using one of the units, you do not need to program the same item using another unit.
*2 This menu is not displayed when scrolling through the display menus. It is only available in direct command code.
*3 When the cellular line only mode is turned on, these menus are not displayed (page 18).
*4 After the Bluetooth device is paired, the device name is displayed.
*5 For CELL 1
*6 For CELL 2
*7 The preset melodies in this product (“Tone 3” - “Melody 10”) are used with permission of © 2009 Copyrights Vision Inc.
*8 The preset melodies in this product (“Tone 1” and “Tone 2”) are used with permission of © 2013 Copyrights Vision Inc.
*9 This feature allows the unit to automatically adjust the date and time each time caller information including date and time is received.
To turn this feature on, select “Caller ID auto”. To turn this feature off, select “Manual”. (Caller ID subscribers only)
To use this feature, set the date and time first (page 14).
*10 If you subscribe to a distinctive ring service (such as IDENTA-RING), select a tone (tone 1 or 2). If you select a melody, you cannot distinguish lines by their ringers.
*11 This tone lets you know when you receive an outside call while you are on another line or an intercom call. If you select “On”, the tone sounds 2 times.
*12 This setting is available when you have the key detector (KX-TGA20). Read the installation manual for more information on the key detector.
*13 For models with supplied key detectors, the display shows “1: Detector1”.
*14 If you register 2 or more key detectors.
*15 If you subscribe to a Caller ID service and want to view the caller’s information after lifting up the handset to answer a call, turn off this feature.
*16 The flash time depends on your telephone exchange or host PBX. Contact your PBX supplier if necessary. The setting should stay at “700 ms” unless pressing 【FLASH】 fails to pick up the waiting call.
*17 Generally, the line mode setting should not be changed. This setting automatically maintains receiver volume at the proper level depending on the current telephone line condition. Set the line mode to “A” if telephone line condition is not good.
*18 This setting is available when a cellular phone is paired.

Alarm

An alarm sounds at the set time for 1 minute and is repeated 5 times at 5 minute intervals (snooze function). A text memo can also be displayed for the alarm. A total of 3 separate alarm times can be programmed for each handset. You can set one of 3 different alarm options (once, daily, or weekly) for each alarm time.

Important:

- Make sure the unit’s date and time setting is correct (page 14).

1 【MENU】#720

TGL46x(en)_0925_ver002.pdf 40 2015/09/25 20:59:18

2 **[▲▼]**: Select the desired alarm. → **[SELECT]**

3 **[▲▼]**: Select the desired alarm option. → **[SELECT]**

"Off" Turns alarm off. Go to step 10.
"Once" An alarm sounds once at the set time.
"Daily" An alarm sounds daily at the set time. Go to step 5.
"Weekly" Alarm sounds weekly at the set time(s).

4 Proceed with the operation according to your selection in step 3.

- **Once:**
  Enter the desired month and date. → **[OK]**
- **Weekly:**
  [▲▼]: Select the desired day of the week and press **[SELECT]**. → **[OK]**

5 Set the desired time.

6 ⊠: Select **"AM"** or **"PM"**. → **[OK]**

7 Enter a text memo (10 characters max.). → **[OK]**

8 **[▲▼]**: Select the desired alarm tone. → **[SELECT]**
- We recommend selecting a different ringer tone from the one used for outside calls.

9 **[▲▼]**: Select the desired snooze setting. → **[SAVE]**

10 **[SELECT]** → **[OFF]**

Note:

- Press **[STOP]** to stop the alarm completely.
- When the handset is in use, the alarm will not sound until the handset is in standby mode.
- Press any dial key or **[SNOOZE]** to stop the sound but keep the snooze function activated.
- If you want to make an outside call when the snooze function is activated, please stop the snooze function before making the call.

Silent mode

Silent mode allows you to select a period of time during which the handset and/or base unit will not ring for outside calls. This feature is useful for time periods when you do not want to be disturbed, for example, while sleeping. Silent mode can be set for each unit. Using the phonebook's group feature (page 30), you can also select groups of callers whose calls override silent mode and ring the unit (Caller ID subscribers only).

Important:

- Make sure the unit's date and time setting is correct (page 14).
- If you have set the alarm, the alarm sounds even if the silent mode is turned on.

Turning silent mode on/off

1 **[MENU]**#238

2 **[▲▼]**: Select the desired setting. → **[SAVE]**
- If you select **"Off"**, press **[OFF]** to exit.

3 Enter the desired hour and minute you wish to start this feature.

4 ⊠: Select **"AM"** or **"PM"**. → **[OK]**

5 Enter the desired hour and minute you wish to end this feature.

6 ⊠: Select **"AM"** or **"PM"**.

7 **[SAVE]** → **[OFF]**

Changing the start and end time

1 **[MENU]**#237

2 Continue from step 3, "Turning silent mode on/off", page 41.

Selecting groups to bypass silent mode

1 **[MENU]**#241

TGL46x(en)_0925_ver002.pdf 41 2015/09/25 20:59:18

2 【▲▼】: Select the desired group. → 【SELECT】
- "✓" is displayed next to the selected group numbers.
- To cancel the selected group: 【▲▼】: Select the group. → Press 【SELECT】 again. "✓" disappears.

3 【SAVE】→【OFF】

Baby monitor

This feature allows you to listen in on a room where another handset is located, allowing you to easily monitor from different areas of the house or place. The monitored handset (placed in a baby's room, for example) will automatically call the monitoring handset or the phone number stored when it detects sound.

Important:

- You should perform a test run of the baby monitor procedure to ensure that the baby monitor feature is set correctly. For example, test its sensitivity. Check the connection if you are diverting the baby monitor to an outside line.
- This feature should not be used as a substitute for a medical or caregiver's supervision. It is the caregiver's responsibility to stay close enough to handle any eventuality.

Note:

- If the unit is connected to a PBX system, you cannot set the baby monitor.
- During the monitoring mode, battery consumption is faster than usual. We recommend leaving the monitored handset on the base unit or charger.
- The monitored handset never rings while it is being monitored. If the base unit is placed near the monitored handset, we recommend turning off the base unit ringer volume (page 35, 37).

Setting the baby monitor

Perform the setting operation with the handset to be monitored (for example, the handset placed in a baby's room).

To monitor with a unit

The internal baby monitor feature is available between handsets.

1 【MENU】#268

2 【▲▼】: "On" → 【SELECT】

3 【▲▼】: Select the desired unit's number to monitor with. → 【SAVE】
- "Baby monitor" will be displayed.
- The registered unit's name/number is displayed.

Note:

- When this feature is on, another handset can hear the monitored handset by making an intercom call.

To monitor from an outside line

If you enable this feature, the unit will call a pre-programmed phone number when the handset detects sound. After you answer the call, you can listen in on the room where the handset is located.
This feature is only available for landline.

■ **From the phonebook:**

1 【MENU】#268

2 【▲▼】: "On" → 【SELECT】

3 【▲▼】: Select "Outgoing call" to monitor from an outside line. → 【ADD】

4 【▲▼】: "Phonebook" → 【SELECT】

5 【▲▼】: Select the phonebook entry. → 【SAVE】
- "Baby monitor" will be displayed.

Note:

- If you edit a phonebook entry which is assigned for monitoring, the edited entry does not transfer to the monitor.

■ **By entering phone numbers:**

1 【MENU】#268

2 【▲▼】: "On" → 【SELECT】

TGL46x(en)_0925_ver002.pdf 42 2015/09/25 20:59:18

3 【▲▼】: Select “Outgoing call” to monitor from an outside line. → 【ADD】
4 【▲▼】: “Manual” → 【SELECT】
5 Enter the desired name. → 【OK】
6 Enter the desired number. → 【OK】 → 【SELECT】
- “Baby monitor” will be displayed.

Turning off the baby monitor

The monitored handset cannot be used while baby monitor is set to “On”.

1 Press 【MENU】 on the handset being monitored.
2 【▲▼】: “On/Off” → 【SELECT】
3 【▲▼】: “Off” → 【SELECT】 → 【OFF】

Editing an outside monitoring number

1 Press 【MENU】 on the handset being monitored.
2 【▲▼】: “On/Off” → 【SELECT】
3 【▲▼】: “On” → 【SELECT】
4 【▲▼】: Select the outside line.
5 【MENU】 → 【▲▼】: “Edit” → 【SELECT】
6 Edit the name if necessary. → 【OK】
7 Edit the phone number if necessary. → 【OK】 → 【SELECT】

Erasing an outside monitoring number

1 Press 【MENU】 on the handset being monitored.
2 【▲▼】: “On/Off” → 【SELECT】
3 【▲▼】: “On” → 【SELECT】
4 【▲▼】: Select the outside line.
5 【MENU】 → 【▲▼】: “Erase” → 【SELECT】
6 【▲▼】: “Yes” → 【SELECT】 → 【OFF】

Baby monitor sensitivity

You can adjust the sensitivity of the baby monitor. Increase or decrease the sensitivity to adjust the sound level needed to trigger the baby monitor feature.

- This feature cannot be set during a monitoring call.

1 Press 【MENU】 on the handset being monitored.
2 【▲▼】: “Sensitivity level” → 【SELECT】
3 【▲▼】: Select the desired setting. → 【SAVE】 → 【OFF】

Answering the baby monitor

■ **When monitoring with a handset:**
Press 【 】 to answer a call.
If you want to respond from the monitoring unit, press 【MUTE】.

- The monitoring unit will answer calls automatically when the auto intercom feature is set to “On” (page 25).

Note:

- If you receive an outside call when communicating with the monitored handset, the interrupt tone sounds. To answer the call, press 【OFF】, then press 【 】.

■ **When monitoring from an outside line:**
Answer the call.
If you want to respond from your monitoring phone, press #1 using tone dialing.
You can turn off the baby monitor feature by pressing #0.

Note:

- The unit disconnects the call automatically after 2 minutes.

Other programming

Changing the handset name

The default handset name is “Handset 1” to “Handset 6”. You can customize the name of each handset (“Bob”, “Kitchen”, etc.). This is useful when you make intercom calls between handsets. To display the handset name in

TGL46x(en)_0925_ver002.pdf 43 2015/09/25 20:59:18

standby mode, turn on the handset name display feature (page 44).

1 **【MENU】#104**

2 Enter the desired name (10 characters max.).

3 **【SAVE】→【OFF】**

Displaying the handset name

You can select whether or not the handset name is displayed in standby mode. The default setting is **"Off"**.

1 **【MENU】#105**

2 **【▲▼】**: Select the desired setting. → **【SAVE】→【OFF】**

Registering a unit

Operating additional units

Additional handsets

Up to 6 handsets can be registered to the base unit.

Important:

- See page 4 for information on the available model.

Registering a handset to the base unit

The supplied handset and base unit are pre-registered. If for some reason the handset is not registered to the base unit, re-register the handset.

1 **Handset:**
【MENU】#130

2 **Base unit:**
Press and hold **【LOCATOR】** for about 5 seconds.
- If all registered handsets start ringing, press **【LOCATOR】** again to stop, then repeat this step.

3 **Handset:**
Press **【OK】**, then wait until a long beep sounds.

Deregistering a handset

A handset can cancel its own registration to the base unit, or other handsets registered to the same base unit. This allows the handset to end its wireless connection with the system.

1 **【MENU】#131**
- All handsets registered to the base unit are displayed.

2 **【▲▼】**: Select the handset you want to cancel. → **【SELECT】**

3 **【▲▼】**: **"Yes"** → **【SELECT】→【OFF】**

TGL46x(en)_0925_ver002.pdf 44 2015/09/25 20:59:18

Using Caller ID service

Important:

- This unit is Caller ID compatible. To use Caller ID features, you must subscribe to a Caller ID service. Contact your phone service provider for details.

Caller ID features

When an outside call is being received, the caller information is displayed.
Caller information for the last 50 callers is logged in the caller list from the most recent call to the oldest.

- If the unit cannot receive caller information, the following is displayed:
  - **"Out of area"**: The caller dials from an area which does not provide a Caller ID service.
  - **"Private caller"**: The caller requests not to send caller information.
  - **"Long distance"**: The caller makes a long distance call.
- If the unit is connected to a PBX system, caller information may not be properly received. Contact your PBX supplier.

Missed calls

If a call is not answered, the unit treats it as a missed call. The display shows **"Missed call"**.

Note:

- Even when there are unviewed missed calls, **"Missed call"** disappears from the standby display if the following operation is performed by one of the units:
  - A handset is replaced on the base unit or charger.
  - Pressing **【OFF】** on a handset.

Phonebook name display

When caller information is received and it matches a phone number stored in the phonebook, the stored name in the phonebook is displayed and logged in the caller list.

Talking Caller ID

This feature lets you know who is calling without looking at the display.
To use this feature, you must:
– subscribe to a Caller ID service of your phone service provider.
– turn this feature on (page 37, xx).
When caller information is received, the handsets and/or base unit announce the caller's name or phone number received from your phone service provider following every ring.

- Name pronunciation may vary. This feature may not pronounce all names correctly.
- Caller ID service has a limit of how many characters can be displayed. If the caller's name is too long, the unit may not be able to display or announce the entire name.

Phonebook name announcement

When caller information is received and it matches a phone number stored in the phonebook, the stored name in the phonebook is announced.

Caller list

Important:

- Make sure the unit's date and time setting is correct (page 14).

Viewing the caller list and calling back

■ **Using a cellular line**

1. **【►】** Redial/CID
   - If the redial list is displayed, press **【►】** Redial/CID again to switch to the caller list.
2. Press **【▼】** to search from the most recent call, or **【▲】** to search from the oldest call.
3. To call back, press **【SELECT】**.
   To exit, press **【OFF】**.
4. **【CELL】**
   - The unit starts dialing when:
     – only 1 cellular phone is paired.

TGL46x(en)_0925_ver002.pdf 45 2015/09/25 20:59:19

– a specific line is set to make cellular calls (page 19).

5 **【▲▼】**: Select the desired cellular phone. → **【SELECT】**

■ **Using a landline**

1 **【►】** Redial/CID
- If the redial list is displayed, press **【►】** Redial/CID again to switch to the caller list.

2 Press **【▼】** to search from the most recent call, or **【▲】** to search from the oldest call.

3 To call back, press **【/】**.
To exit, press **【OFF】**.

Note:
- If the entry has already been viewed or answered, "✓" is displayed.
- C1 or C2 indicates the caller information was received from the cellular line.

Editing a caller's phone number

You can edit a phone number in the caller list by removing its area code and/or the long distance code "1".

■ **When a cellular phone is paired:**

1 **【►】** Redial/CID
- If the redial list is displayed, press **【►】** Redial/CID again to switch to the caller list.

2 **【▲▼】**: Select the desired entry. → **【SELECT】**

3 Press ⊠ (Edit) repeatedly until the phone number is shown in the desired format.

4 **Using a cellular line:**
To make a cellular call, continue from step 4, "Viewing the caller list and calling back", page 45.
Using a landline:
【/】

■ **When a cellular phone is not paired:**

1 **【►】** Redial/CID
- If the redial list is displayed, press **【►】** Redial/CID again to switch to the caller list.

2 **【▲▼】**: Select the desired entry. → **【MENU】**

3 **【▲▼】**: **"Edit"** → **【SELECT】**

4 Press **【EDIT】** repeatedly until the phone number is shown in the desired format.

5 **【/】**

Caller ID number auto edit feature

Once you call back an edited number, the unit which was used to call back remembers the area code and format of the edited number. The next time someone calls from the same area code, caller information is customized by the unit as follows:
– When the call is being received, the Caller ID number is displayed in the same format as the edited number.
– After the call has ended, the caller's phone number is displayed in the same format as the edited number, when reviewed from the caller list.

For example, you can use this feature to set the unit to ignore the area code of callers in your area, so that you can call these local numbers using caller information without dialing the area code.
To activate this feature, you must edit an entry in the caller list, then call that number. After that, phone numbers from that caller's area code are edited automatically.
This feature can be set for each unit (page 39). The default setting is **"On"**.

Note:
- Phone numbers from the 4 most recently edited area codes are automatically edited.

Erasing selected caller information

1 **【►】** Redial/CID
- If the redial list is displayed, press **【►】** Redial/CID again to switch to the caller list.

2 **【▲▼】**: Select the desired entry.

3 **【ERASE】** → **【▲▼】**: **"Yes"** → **【SELECT】** → **【OFF】**

TGL46x(en)_0925_ver002.pdf 46 2015/09/25 20:59:19

Erasing all caller information

1 **[►]** Redial/CID
- If the redial list is displayed, press **[►]** Redial/CID again to switch to the caller list.

2 **[ERASE]** → **[▲▼]**: **"Yes"** → **[SELECT]** → **[OFF]**

TGL46x(en)_0925_ver002.pdf 47 2015/09/25 20:59:19

Copying phonebook from a cellular phone (phonebook transfer)

You can copy phonebook entries from the paired cellular phones or other cellular phones (not paired) to the unit's phonebook. A cellular phone must be compatible with Bluetooth wireless technology.

Important:

- Your cellular phone must support Phone Book Access Profile (PBAP) or Object Push Profile (OPP) specification.
- If a copied entry has 2 or more phone numbers, each phone number (6 max.) is stored as a separate entry with the same name.
- If a phonebook entry includes additional data such as a picture, that entry may fail to copy to the base unit.
- If your cellular phone includes international call entries, set the conversion codes before copying (page 48).

1 **Handset:**
[MENU]#61**8**

2 **Handset:**
To copy from paired cellular phones:
[▲▼]: Select the desired cellular phone. → **[SELECT]**
- Copied items are stored to the group (**"Cell 1"** or **"Cell 2"**) which the cellular phone is paired to.

To copy from other cellular phones (not paired):
[▲▼]: **"Other cell"** → **[SELECT]** → **[▲▼]**: Select the group you want to copy to. → **[SELECT]**

3 **Handset:**
When "Use the cell to transfer phone book" is displayed:
Go to step 4.
When "Select mode" menu is displayed:
[▲▼]: Select **"Auto"** or **"Manual"**. → **[SELECT]**
"Auto": Download all entries from the cellular phone automatically. Go to step 5.
"Manual": Copy entries you selected.
- **"Select mode"** menu is displayed only when the cellular phone supports PBAP (Phone Book Access Profile) for Bluetooth connection.
- Some cellular phones may require you to perform an operation on the cellular phone even if you select **"Auto"**.

4 **Cellular phone:**
Follow the instructions of your cellular phone to copy phonebook entries.
- For other cellular phones (not paired), you need to search for and select the base unit. The Bluetooth PIN (default: **"0000"**) may be required. If your cellular phone shows PassKey confirmation on its display, follow the directions to proceed.
- The entries being copied are displayed on the handset.

5 **Handset:**
Wait until **"Completed"** is displayed.
- You can continue copying other entries if necessary.

6 **Handset: [OFF]**

Note:

- Some copied entries may have characters which do not exist in the character table (page 29). These characters can be displayed but cannot be entered when editing an entry.
- The unit does not support some characters. If a copied entry includes those characters, they are replaced with other available characters or "✱".
- If you receive a call while copying phonebook entries, the copying procedure stops. Try again after finishing the call.

Setting conversion codes

You must first set the following 3 dialing codes before transferring the phonebook from your cellular phone (each 4 digits max.).
– **"International code"**: An international prefix used when you make an international call.
– **"Country code"**: Your country code for international calls.

TGL46x(en)_0925_ver002.pdf 48 2015/09/25 20:59:19

– **"Trunk prefix"**: A trunk prefix; the initial digit(s) to be dialed in a domestic call, prior to the area code.

1 **【MENU】**

2 To store **"International code"**: #117
To store **"Country code"**: #118
To store **"Trunk prefix"**: #119

3 Enter the desired number. → **【SAVE】** → **【OFF】**

Note:

- After you copy the entries, confirm that the numbers were transferred correctly.

Link to Cell app

For Android™ users

The free Link to Cell app helps you integrate your Android phone with your DECT phone for convenient use.

Important:

- Your cellular phone must support SPP (Serial Port Profile) specification.

■ **Application (App) Alerts On/Off**
This feature alerts your DECT phone when your paired Android phone receives the following alert information:
– **[Google Calendar]**™
– **[Email]**
– **[Gmail]**™
– **[Text messages]**
– **[Facebook]**
– **[Twitter]**
– **[Instagram]**
– **[Low Battery]** information

You can turn each type of alert on or off using the Link to Cell app. If you turn the alerting app on, your DECT phone alerts you with the corresponding information.

■ **Phone Settings**
Using your paired Android phone, you can program your Phone Settings for the following features:
– **[Time adjustment]***1
– **[Cell line only mode]** (page 18)
– **[International code]**, **[Country code]**, and **[Trunk prefix]** (page 48)

*1 When your paired Android phone is within the base unit's range, the date and time information is updated on the handset and base unit's display, if time adjustment feature is activated on your Android phone.

Installing the Link to Cell app

Download links are also available at the web page below.

www.panasonic.net/pcc/support/tel/appalerts

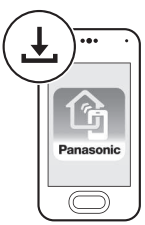

Starting the app for the first time

1 Make sure that your Android device's Bluetooth feature is turned on and that your Android device is paired to the base unit.

2 Start the Link to Cell app by tapping its icon.

3 Follow the on-screen instructions.

Important:

- For further information, refer to the instructions on web page listed above.
- To use this feature, the following settings are required.
  – **Android phone:** Bluetooth must be turned on.

TGL46x(en)_0925_ver002.pdf 49 2015/09/25 20:59:19

– **Android phone: [Application Alerts manager]**[*1] must be turned on.
– **Handset: "Alert On/Off"** must be turned on (page 50).

- If this feature does not work, turn on your device's Bluetooth feature, unplug the base unit's AC adaptor, and then reconnect it.

*1 **Turning on [Application Alerts manager]**
Use the following procedure after installing the Link to Cell app.
Android 2.x: Open your device's **[Settings]** app. → Tap **[Accessibility]**. → Turn on the **[Accessibility]** and **[Application Alerts manager]** checkboxes.
Android 4.x: Open your device's **[Settings]** app. → Tap **[Accessibility]**. → Turn on **[Application Alerts manager]**.

Requirements

- An Android device (Android 2.1 or later)

Text message (SMS) alert

For iPhone® and BlackBerry® users

This feature alerts you on your DECT phone when your paired cellular phone receives SMS messages. The Link to Cell app is not required for **iPhone and BlackBerry users**.

Important:

- Your cellular phone must support MAP (Message Access Profile) specification.
- For further information, refer to the instructions on web page listed below:
www.panasonic.net/pcc/support/tel/sms/
- To use this feature, the following settings are required:
  – **iPhone and BlackBerry Phone:** Bluetooth must be turned on.
  – **Handset: "Alert On/Off"** must be turned on (page 50).
- If this feature does not work, turn on your device's Bluetooth feature, unplug the base unit's AC adaptor, and then reconnect it.

Alert settings for your DECT phone

If your cellular phone is paired to the base unit and receives notifications, the handset and/or base unit can alert you:
– by briefly displaying a message
– by announcement
– by sounding alert tones

Important:

- For Android users: Use the Link to Cell app to enable the desired alerts (page 49).

Turning alert on/off

Once this feature is turned on, it will alert you on the handset and base unit when your cellular phone receives notifications.
– **"On"** (default): The handset and/or base unit alert you.
– **"Off"**: The handset and/or base unit do not alert you.
You can configure this setting using either the base unit or one of the handsets.

1 For CELL 1: **【MENU】**#6101
For CELL 2: **【MENU】**#6102

2 **【▲▼】**: Select the desired setting. → **【SAVE】** → **【OFF】**

Setting the voice alert

You can turn on/off the voice alert.
– **"On"** (default): The handset and/or base unit notify you by voice announcement.
– **"Off"**: Voice announcement is not available as alert.
You can configure this setting using either the base unit or one of the handsets.

1 For CELL 1: **【MENU】**#6031
For CELL 2: **【MENU】**#6032

2 **【▲▼】**: Select the desired setting. → **【SAVE】** → **【OFF】**

Selecting the alert tone

1 For CELL 1: **【MENU】**#6041
For CELL 2: **【MENU】**#6042

2 **【▲▼】**: Select the desired setting.

TGL46x(en)_0925_ver002.pdf 50 2015/09/25 20:59:19

3 **[SAVE]** → **[OFF]**

Using a Bluetooth wireless headset (optional) for landline calls

By pairing a Bluetooth headset to the base unit, you can have a hands-free conversation wirelessly for landline calls.

Important:

- Your Bluetooth wireless headset must support the HeadSet Profile (HSP) specification.
- 1 headset can be paired to the base unit.
- Only 2 Bluetooth devices can be used with the unit at the same time (for example, 2 cellular lines, or the headset and 1 cellular line).
- For best performance, we recommend using a Bluetooth headset within 1 m (3.3 feet) of the base unit. A headset can communicate with the base unit within a range of approximately 10 m (33 feet).

Pairing a headset to the base unit

Important:

- Make sure that the Bluetooth headset is not connected to any other Bluetooth device.

1 **Your headset:**
Set your headset to pairing mode.
- Refer to the headset operating instructions.

2 **Handset:**
[MENU]#621

3 **If your headset PIN is "0000",** go to step 4.
If your headset PIN is other than "0000", press **[CLEAR]**, then enter your headset PIN.
- Typically, default PIN is **"0000"**. Refer to the headset operating instructions.

4 Press **[OK]**, then wait until a long beep sounds.

5 **[OFF]**
- When the HEADSET indicator on the base unit lights up, you are ready to use the headset.

Connecting/disconnecting a headset

If you cannot connect the headset and base unit using the headset, you can connect using the handset.
To use your headset with another Bluetooth device such as a cellular phone, you may need to disconnect it from the base unit.

Important:

- Make sure that the headset is turned on.

1 **To connect/disconnect:**
[MENU]#622
- A long beep sounds.

2 **[OFF]**

Unpairing a headset

You can cancel a pairing of the headset that is stored to the base unit.

1 **[MENU]**#612

2 **[▲▼]: "Yes"** → **[SELECT]**
- When the headset is unpaired, the HEADSET indicator is turned off.

3 **[OFF]**

Operating a Bluetooth wireless headset using a landline

Important:

- Refer to your headset operating instructions for headset operations.

Answering landline calls with your headset

To answer a landline call, press your headset's button referring to your headset operating instructions.
When you finish talking, press your headset's button referring to your headset operating instructions.

TGL46x(en)_0925_ver002.pdf 51 2015/09/25 20:59:19

Note:

- If you cannot hang up the call using your headset, press 【►■】 (STOP) on the base unit.

Switching between the base unit and your headset

You can switch between the base unit and your headset while listening to messages recorded on the base unit answering system.

- You can only switch from the base unit to your headset.

■ **To switch to your headset:**
Turn on the headset referring to your headset operating instructions.

Call sharing between your headset and the handset

Important:

- To activate this feature, you should set call sharing mode to on beforehand (page 39).

■ **While the handset is on a landline call:**
To join the conversation with your headset, press your headset's button referring to your headset operating instructions.

■ **While your headset is on a landline call:**
To join the conversation with the handset, press 【/】.

Adjusting your headset receiver volume

Base unit

Press 【+】 or 【−】 repeatedly while using your headset.

Note:

- Depending on your headset, the receiver volume may not be adjustable.

TGL46x(en)_0925_ver002.pdf 52 2015/09/25 20:59:19

Answering system for landline

The answering system can answer and record calls for you when you are unavailable to answer the phone.
You can also set the unit to play a greeting message but not to record caller messages by selecting **"Greeting only"** as the recording time setting (page 59).

Important:

- Make sure the unit's date and time setting is correct (page 14).

Memory capacity (including your greeting message)

The total recording capacity is about 18 minutes. A maximum of 64 messages can be recorded.

Note:

- When message memory becomes full:
  - **"Messages full"** is shown on the handset display.
  - The ANSWER ON/OFF indicator (📼) on the base unit flashes rapidly if the answering system is turned on.
  - If you use the pre-recorded greeting message, the unit automatically switches to another pre-recorded greeting message asking callers to call again later.
  - If you recorded your own greeting message, the same message is still announced to callers even though their messages are not recorded.

Turning the answering system on/off

Base unit

Press **[ANSWER ON/OFF]** to turn on/off the answering system.

Handset

1 **To turn on:**
[MENU]#3271
To turn off:
[MENU]#3280

2 **[OFF]**

Note for base unit and handset:

- When the answering system is turned on, the ANSWER ON/OFF indicator (📼) on the base unit lights up.

Greeting message

When the unit answers a call, a greeting message is played to callers.
You can use either:
– your own greeting message
– a pre-recorded greeting message

Recording your greeting message

1 **[MENU]**#302

2 **[▲▼]**: **"Yes"** → **[SELECT]**

3 After a beep sounds, hold the handset about 20 cm (8 inches) away and speak clearly into the microphone (2 minutes max.).

4 Press **[STOP]** to stop recording. → **[OFF]**

Using a pre-recorded greeting message

The unit provides 2 pre-recorded greeting messages:
– If you reset to pre-recorded greeting or do not record your own greeting message, the unit plays a pre-recorded greeting asking callers to leave a message.
– If the message recording time (page 59) is set to **"Greeting only"**, callers' messages are not recorded and the unit plays a different pre-recorded greeting message asking callers to call again.

TGL46x(en)_0925_ver002.pdf 53 2015/09/25 20:59:19

Resetting to a pre-recorded greeting message

If you change your own greeting message to a pre-recorded one, your own recorded greeting message is erased.

1 **【MENU】**#30**4**

2 **【YES】** → **【OFF】**

Playing back the greeting message

1 **【MENU】**#30**3**

2 To exit, press **【OFF】**.

Listening to messages

Important:

- If your phone service provider offers voicemail service, the voicemail service may answer calls before the base unit's built-in answering system has a chance to answer calls and record messages.
  In this case, messages you expect to be recorded by the answering system will be recorded on the voicemail service. For more information, see "For landline voicemail service subscribers" (page 58).
- When using the base unit or handset to listen to messages, the noise reduction feature (page 23) is activated automatically in spite of the setting (**NR** is not displayed).

Using the base unit

When new messages have been recorded, **【►■】** on the base unit flashes.
Press **【►■】** (PLAY).

- During playback, **【►■】** on the base unit lights.
- If new messages have been recorded, the base unit plays back new messages.
- If there are no new messages, the base unit plays back all messages.

Operating the answering system during playback

Key	Operation
【+】 or **【−】**	Adjust the speaker volume
【I◄◄】	Repeat message*1
【►►I】	Skip message
【►■】 (STOP)	Stop playback
【ERASE】	Erase currently playing message

*1 If pressed within the first 5 seconds of a message, the previous message is played.

Erasing all messages

Press **【ERASE】** 2 times while the unit is not in use.

Using the handset

When new messages have been recorded, **"New message"** is displayed.

1 **To listen to new messages:**
【MENU】#323
To listen to all messages:
【MENU】#324

2 When finished, press **【OFF】**.

Note:

- To switch to the receiver, press **【/】**.
- You can also use the **【PLAY】** soft key, if displayed, to play new messages.

Operating the answering system

【MENU】 → **【▲▼】**: **"Answering device"** → **【SELECT】**

Key	Operation
【+】 or **【−】**	Adjust the receiver/speaker volume (during playback)
1 or **【◄】**	Repeat message (during playback)*1

TGL46x(en)_0925_ver002.pdf 54 2015/09/25 20:59:19

Key	Operation
2 or [►]	Skip message (during playback)
3	Enter the "Settings" menu
4	Play new messages
5	Play all messages
6	Play greeting message
7 6	Record greeting message
8	Turn answering system on
[PAUSE]	Pause message*2
9 or [STOP]	Stop recording Stop playback
0	Turn answering system off
* 4 *3	Erase currently playing message
* 5	Erase all messages
* 6	Reset to a pre-recorded greeting message

*1 If pressed within the first 5 seconds of a message, the previous message is played.
*2 To resume playback:
[▲▼]: "Playback" → [SELECT]
*3 You can also erase as follows:
[PAUSE] → [▲▼]: "Erase" → [SELECT] → [▲▼]: "Yes" → [SELECT]

Calling back (Caller ID subscribers only)

■ **Using a landline:**

1 Press [PAUSE] during playback.
2 [▲▼]: "Call back" → [SELECT]

■ **Using a cellular line:**

1 Press [PAUSE] during playback.
2 [▲▼]: "Call back (Cell)" → [SELECT]
- The unit starts dialing when:
  – only 1 cellular phone is paired.
  – a specific line is set to make cellular calls (page 19).

3 [▲▼]: Select the desired cellular phone. → [SELECT]

Editing the number before calling back

■ **Using a landline:**

1 Press [PAUSE] during playback.
2 [▲▼]: "Edit & Call" → [SELECT]
3 Press [EDIT] repeatedly until the phone number is shown in the desired format (page 46).
4 [/]

■ **Using a cellular line:**

1 Press [PAUSE] during playback.
2 [▲▼]: "Edit & Call" → [SELECT]
3 Press [EDIT] repeatedly until the phone number is shown in the desired format (page 46).
4 [CELL]
- The unit starts dialing when:
  – only 1 cellular phone is paired.
  – a specific line is set to make cellular calls (page 19).

5 [▲▼]: Select the desired cellular phone. → [SELECT]

Erasing all messages

1 [MENU]#3 2 5
2 [▲▼]: "Yes" → [SELECT] → [OFF]

Advanced new message alerting features

Audible message alert

This feature allows the base unit to beep to inform you of a new message arrival when new messages are recorded. The base unit beeps 2 times every minute until you listen to the messages, if the "Base unit beep" setting is turned on. The default setting is "Off".

1 [MENU]#3 3 9
2 [▲▼]: Select the desired setting. → [SAVE] → [OFF]

TGL46x(en)_0925_ver002.pdf 55 2015/09/25 20:59:19

New message alert by a call

This feature allows you to receive a notification by phone when new messages are recorded. The base unit calls a phone number you specify. You can then operate the answering system remotely to listen to the new message.
To use this feature, you must:
– store a phone number to which the unit makes the call to.
– turn on the new message alert setting.
After you answer the new message alert call, you can listen to messages from that call (page 57).
This feature is only available for landline.

Important:

- A new message alert is stopped 1 minute after the unit starts to call. The unit will not retry the call even if the call is not answered.

Storing a phone number to which the unit makes an alert call

■ **From the phonebook:**

1 **[MENU]**#338
2 **[▲]/[▼]**: "Notification to" → **[SELECT]** → **[ADD]**
3 **[▲]/[▼]**: "Phonebook" → **[SELECT]**
4 **[▲]/[▼]**: Select the desired phonebook entry. → **[SAVE]** → **[OFF]**

■ **By entering a phone number:**

1 **[MENU]**#338
2 **[▲]/[▼]**: "Notification to" → **[SELECT]** → **[ADD]**
3 **[▲]/[▼]**: "Manual" → **[SELECT]**
4 Enter the desired name (16 characters max.). → **[OK]**
5 Enter the desired number (24 digits max.). → **[OK]** → **[SELECT]** → **[OFF]**

Turning on/off the new message alert setting

1 **[MENU]**#338
2 **[▲]/[▼]**: "On/Off" → **[SELECT]**
3 **[▲]/[▼]**: Select the desired setting. → **[SAVE]** → **[OFF]**

Editing the set phone number

1 **[MENU]**#338
2 **[▲]/[▼]**: "Notification to" → **[SELECT]**
3 **[MENU]** → **[▲]/[▼]**: "Edit" → **[SELECT]**
4 Edit the name if necessary (16 characters max.). → **[OK]**
5 Edit the phone number if necessary (24 digits max.). → **[OK]** → **[SELECT]** → **[OFF]**

Erasing the set phone number

1 **[MENU]**#338
2 **[▲]/[▼]**: "Notification to" → **[SELECT]**
3 **[MENU]** → **[▲]/[▼]**: "Erase" → **[SELECT]**
4 **[▲]/[▼]**: "Yes" → **[SELECT]** → **[OFF]**
- The new message alert setting is turned off.

Activating/inactivating the remote access code to play messages

If you activate this feature, you must enter the remote access code (page 57) to play the new message from the new message alert call. This is so that unauthorized parties cannot listen to your messages. The default setting is "Inactivate".
– "Inactivate": You can listen to the message by pressing 4 to play new messages (without entering the remote access code).
– "Activate": You must enter your remote access code and then press 4 to play new message.

1 **[MENU]**#338
2 **[▲]/[▼]**: "Remote code" → **[SELECT]**
3 **[▲]/[▼]**: Select the desired setting. → **[SAVE]** → **[OFF]**

TGL46x(en)_0925_ver002.pdf 56 2015/09/25 20:59:19

Listening to messages

After you answer the new message alert, you can listen to the messages as follows.

■ **When the remote access code is set to "Inactivate":**
Press 4 to play the new message during the announcement.

■ **When the remote access code is set to "Activate":**

1 Enter the remote access code (page 57) during the announcement.

2 Press 4 to play the new message.

Note:

- Within 10 seconds after listening to new messages, you can press #9 during the call to turn off the new message alert by a call feature.
- Even if the unit makes a new message alert call, the handset redial list does not show the record.

Remote operation

Using a touch-tone phone, you can call your phone number from outside and access the unit to listen to messages or change answering system settings. The unit's voice guidance prompts you to press certain dial keys to perform different operations.

Remote access code

A 3-digit remote access code must be entered when operating the answering system remotely. This code prevents unauthorized parties from listening to your messages remotely. The default setting is "111".

Important:

- To prevent unauthorized access to this product, we recommend that you regularly change the remote code.

1 [MENU]#306

2 Enter the desired 3-digit remote access code.

3 [SAVE] → [OFF]

Deactivating remote operation

Press * in step 2 on "Remote access code", page 57.

- The entered remote access code is deleted.

Using the answering system remotely

1 Dial your landline phone number from a touch-tone phone.

2 After the greeting message starts, enter your remote access code.

3 Follow the voice guidance prompts as necessary or control the unit using remote commands (page 57).

4 When finished, hang up.

Voice guidance

■ **When the English voice guidance is selected**
During remote operation, the unit's voice guidance starts and prompts you to press 1 to perform a specific operation, or press 2 to listen to more available operations.

■ **When the Spanish voice guidance is selected**
To start the voice guidance, press 9. The voice guidance announces the available remote commands (page 57).

Note:

- If you do not press any dial keys within 10 seconds after a voice guidance prompt, the unit disconnects your call.

Remote commands

You can press dial keys to access certain answering system functions without waiting for the voice guidance to prompt you.

Key	Operation
1	Repeat message (during playback)*1
2	Skip message (during playback)
4	Play new messages

TGL46x(en)_0925_ver002.pdf 57 2015/09/25 20:59:19

Key	Operation
5	Play all messages
9	Stop playback*2 Start voice guidance*3
0	Turn answering system off
✱4	Erase currently playing message
✱5	Erase all messages
✱#	End remote operation (or hang up)

*1 If pressed within the first 5 seconds of a message, the previous message is played.
*2 For English voice guidance only
*3 For Spanish voice guidance only

Turning on the answering system remotely

1 Dial your phone number from a touch-tone phone.

2 Let the phone ring 15 times.
- A long beep is heard.

3 Enter your remote access code within 10 seconds after the long beep.
- The greeting message is played back.
- You can either hang up, or enter your remote access code again and begin remote operation (page 57).

Answering system settings

Call screening

While a caller is leaving a message, you can listen to the call through the unit's speaker. To adjust the speaker volume, press 【+】 or 【−】 repeatedly.
You can answer the call by pressing 【/】 on the handset.
Call screening can be set for each handset.
The default setting is **"On"**.

1 【MENU】#310

2 【▲▼】: Select the desired setting. → 【SAVE】 → 【OFF】

Number of rings before the unit answers a call

You can change the number of times the phone rings **"Ring count"** before the unit answers calls. You can select 2 to 7 rings, or **"Toll saver"**.
The default setting is **"4 rings"**.
"Toll saver": The unit's answering system answers at the end of the 2nd ring when new messages have been recorded, or at the end of the 5th ring when there are no new messages. If you call your phone from outside to listen to new messages (page 57), you know that there are no new messages when the phone rings for the 3rd time. You can then hang up without being charged for the call.

1 【MENU】#211

2 【▲▼】: Select the desired setting. → 【SAVE】 → 【OFF】

For landline voicemail service subscribers

If you subscribe to a flat-rate service package that includes Caller ID, call waiting, voicemail, and unlimited local/regional/long distance calls, please note the following:
- To use the voicemail service provided by your phone service provider rather than the unit's answering system, turn off the answering system (page 53).
- To use this unit's answering system rather than the voicemail service provided by your phone service provider, please contact your phone service provider to deactivate your voicemail service.
  If your phone service provider cannot do this:
  – Set this unit's **"Ring count"** setting so that this unit's answering system answers calls before the voicemail service of your phone service provider does. It is necessary to check the number of rings required to activate the voicemail service provided by your phone service provider before changing this setting.
  – Change the number of rings of the voicemail service so that the answering

TGL46x(en)_0925_ver002.pdf 58 2015/09/25 20:59:19

system can answer the call first. To do so, contact your phone service provider.

Caller's recording time

You can change the maximum message recording time allowed for each caller. The default setting is **"3 min"**.

1 **[MENU]**#305

2 **[▲▼]**: Select the desired setting. → **[SAVE]** → **[OFF]**

Selecting "Greeting only"

You can select **"Greeting only"** which sets the unit to announce a greeting message to callers but not record messages.
Select **"Greeting only"** in step 2 on "Caller's recording time", page 59.

Note:

- When you select **"Greeting only"**:
  - If you do not record your own message, the unit will play the pre-recorded greeting-only message asking callers to call again later.
  - If you use your own message, record the greeting-only message asking callers to call again later (page 53).

TGL46x(en)_0925_ver002.pdf 59 2015/09/25 20:59:19

Voicemail service for landline

Voicemail is an automatic answering service offered by your phone service provider. After you subscribe to this service, your phone service provider's voicemail system answers calls for you when you are unavailable to answer the phone or when your line is busy. Messages are recorded by your phone service provider, not your telephone. Please contact your phone service provider for details of this service.

Important:

- To use the voicemail service provided by your phone service provider rather than the unit's answering system, turn off the answering system (page 53). For details, see page 58.

Storing the voicemail (VM) access number

In order to listen to your voicemail messages, you must dial your phone service provider's voicemail access number. Once you have stored your voicemail access number, you can dial it automatically (page 60).

1 **【MENU】**#331

2 Enter your access number (24 digits max.). → **【SAVE】** → **【OFF】**

Note:

- When storing your voicemail access number and your mailbox password, press **【▲】** (Pause) to add pauses (page 20) between the access number and the password as necessary. Contact your phone service provider for the required pause time.

Example:

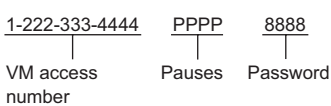

To erase the voicemail access number

1 **【MENU】**#331

2 Press and hold **【CLEAR】** until all digits are erased. → **【SAVE】** → **【OFF】**

Voicemail (VM) tone detection

Your phone service provider sends special signals (sometimes called "voicemail tones" or "stutter tones") to the unit to let you know you have new voicemail messages. If you hear a series of dial tones followed by a continuous dial tone after you press **【】**, you have new voicemail messages. Soon after you hang up a call or after the phone stops ringing, your unit checks the phone line to see if new voicemail messages have been recorded.
Turn this feature off when:
– You do not subscribe to voicemail service.
– Your phone service provider does not send voicemail tones.
– Your phone is connected to a PBX.
If you are not sure which setting is required, contact your phone service provider.

Turning VM tone detection on/off

The default setting is **"On"**.

1 **【MENU】**#332

2 **【▲】**/**【▼】**: Select the desired setting. → **【SAVE】** → **【OFF】**

Listening to voicemail messages

When new messages have been recorded, **"Voicemail msg. via phone co."** is displayed if message indication service is available.

1 **【MENU】**#330
- The speakerphone turns on.

2 Follow the pre-recorded instructions.

3 When finished, hang up.

Note:

- You can also use the **【ACCESS】** soft key, if displayed, to play new voicemail messages.

TGL46x(en)_0925_ver002.pdf 60 2015/09/25 20:59:20

- If the handset still indicates there are new messages even after you have listened to all new messages, turn it off by pressing and holding # until the handset beeps.

Wall mounting

Note:

- Make sure that the wall and the fixing method are strong enough to support the weight of the unit.

Base unit

1 Lead the AC adaptor cord and telephone line cord through the hole in the wall mounting adaptor in the direction of the arrow.

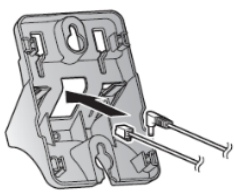

2 Tuck the telephone line cord inside the wall mounting adaptor (❶). Connect the AC adaptor cord and telephone line cord (❷).
Ⓐ AC adaptor cord

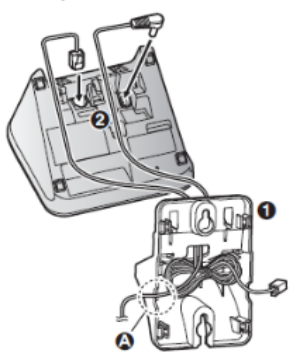

3 Insert the hooks on the wall mounting adaptor into holes (Ⓐ) and (Ⓑ) on the base unit.

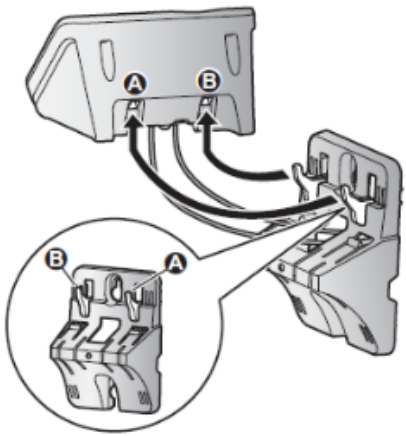

4 Adjust the adaptor to hold the base unit, then push it in the direction of the arrow until it clicks into place.

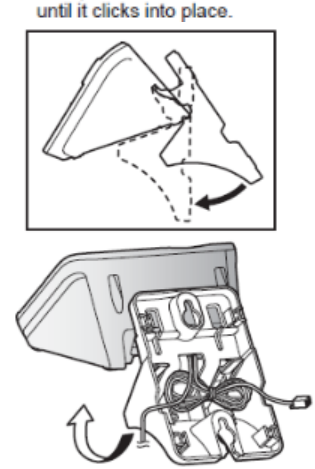

TGL46x(en)_0925_ver002.pdf 61 2015/09/25 20:59:20

5 Mount the unit on a wall then slide down to secure in place.

Ⓐ AC adaptor cord

- This product is compliant with the following wall phone plate sizes (2 types).

Ⓑ 83 mm (3 1/4 inches)

Ⓒ 102 mm (4 inches)

Fit the slots of the unit onto the corresponding wall phone plate tabs for (Ⓓ) and (Ⓔ) respectively.

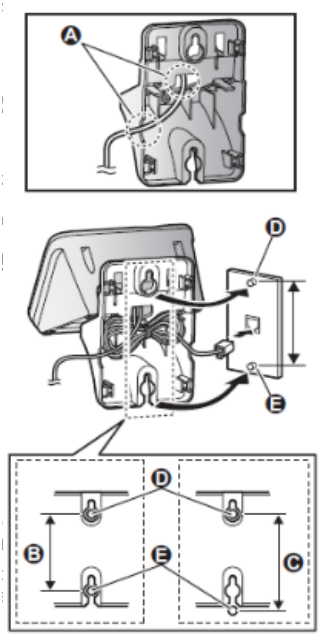

To remove the wall mounting adaptor

While pushing down the release levers (❶), remove the adaptor (❷).

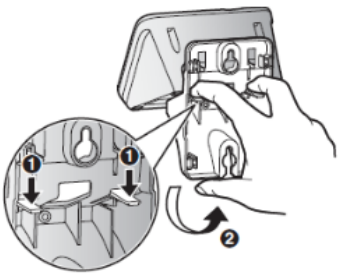

Charger

Drive the screws (Ⓐ) (not supplied) into the wall.

Ⓑ 27.2 mm (1 1/16 inches)

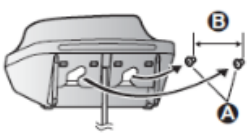

TGL46x(en)_0925_ver002.pdf 62 2015/09/25 20:59:20

Error messages

Display message	Cause/solution
Ask phone company for VM access #	● You have not stored the voicemail access number. Store the number (page 60).
Base no power or **No link. Re-connect base AC adaptor.**	● Confirm the base unit's AC adaptor is connected to the unit and the power outlet correctly. ● The handset has lost communication with the base unit. Move closer to the base unit and try again. ● Unplug the base unit's AC adaptor to reset the unit. Reconnect the adaptor and try again. ● The handset's registration may have been canceled. Re-register the handset (page 44).
Busy	● No cellular phone is paired to the base unit. Pair a cellular phone (page 16). ● The called unit is in use. ● Other units are in use and the system is busy. Try again later. ● The handset you are using is too far from the base unit. Move closer and try again. ● Only 2 Bluetooth devices can be used with the unit at the same time (for example, 2 cellular lines, or the headset and 1 cellular line).
Check tel line	● The supplied telephone line cord has not been connected yet or not connected properly. Check the connections (page 10). ● If you do not connect the telephone line cord and use only cellular lines, set the cellular line only mode (page 18).
Error!!	● Recording was too short. Try again. ● Someone is using a cellular line or headset. Try again later. ● The phonebook copy is incomplete (page 48). The cellular phone is disconnected from the base unit. Make sure that other Bluetooth devices are not connected to the cellular phone, and try again.
Failed	● Although the unit tried to connect to the cellular phone or headset, the connection has been failed. – Someone is using a cellular line or headset. Try again later. – Make sure that the cellular phone or headset is not connected to other Bluetooth devices.
Invalid	● There is no handset registered to the base unit matching the handset number you entered. ● The handset is not registered to the base unit. Register the handset (page 44).

TGL46x(en)_0925_ver002.pdf 63 2015/09/25 20:59:20

Display message	Cause/solution
Requires subscription to Caller ID.	● You must subscribe to a Caller ID service. Once you receive caller information after subscribing to a Caller ID service, this message will not be displayed.
Use rechargeable battery.	● A wrong type of battery such as alkaline or manganese was inserted. Use only the rechargeable Ni-MH batteries noted on page 4, 7.

Troubleshooting

If you still have difficulties after following the instructions in this section, disconnect the base unit's AC adaptor, then reconnect the base unit's AC adaptor. Remove the batteries from the handset, and then insert them into the handset again.

General use

Problem	Cause/solution
The handset does not turn on even after installing charged batteries.	● Place the handset on the base unit or charger to turn on the handset.
The unit does not work.	● Make sure the batteries are installed correctly (page 10). ● Fully charge the batteries (page 11). ● Check the connections (page 10). ● Unplug the base unit's AC adaptor to reset the unit. Reconnect the adaptor and try again. ● The handset has not been registered to the base unit. Register the handset (page 44).
I cannot pair a cellular phone to the base unit.	● Depending on the compatibility of the cellular phone, you may not be able to pair it to the base unit. Confirm that your cellular phone supports the hands-free profile (HFP) specification. ● Confirm that the Bluetooth feature of your cellular phone is turned on. You may need to turn this feature on depending on your cellular phone. ● The Bluetooth technology on your cellular phone may not be functioning normally. Turn off and on your cellular phone. ● If your cellular phone is already connected to another Bluetooth device such as a Bluetooth headset, turn it off or disconnect it from your cellular phone. ● Some cellular phones may require you to enter the Bluetooth PIN to pairing. Confirm that you entered the correct PIN.

TGL46x(en)_0925_ver002.pdf 64 2015/09/25 20:59:20

Problem	Cause/solution
I cannot connect a cellular phone to the base unit.	● Confirm that your cellular phone is turned on. ● Confirm that your cellular phone is within base unit range (page 13). ● Your cellular phone's Bluetooth feature is turned off. Turn it on. ● Depending on the state of the wireless environment, such as the presence of any electrical interference, there may be a delay even if the auto connection feature is turned on. You can connect to the base unit manually (page 18). ● The cellular phone has not been paired to the base unit. Pair the cellular phone (page 16). ● If your cellular phone is already connected to another Bluetooth device such as a Bluetooth headset or other Panasonic DECT phone, disconnect the device, then perform the connecting procedure to the base unit. ● If your cellular phone is already registered on another Panasonic DECT phone, this function will not work properly. We strongly recommend that you remove the registration of this phone on both your cellular phone and on the other Panasonic DECT phone.
I cannot hear a dial tone.	● Make sure that the CELL indicator lights up (page 14). ● The base unit's AC adaptor or telephone line cord is not connected. Check the connections. ● Disconnect the base unit from the telephone line and connect the line to a known working telephone. If the working telephone operates properly, contact our service personnel to have the unit repaired. If the working telephone does not operate properly, contact your phone service provider.
The base unit beeps.	● New messages have been recorded. Listen to the new messages (page 54).

Menu list

Problem	Cause/solution
The display is in a language I cannot read.	● Change the display language (page 14).
I cannot register a handset to a base unit.	● The maximum number of handsets (6) is already registered to the base unit. Cancel unused handset registrations from the base unit (page 44).

Battery recharge

Problem	Cause/solution
The handset beeps and/or 🔋 flashes.	● Battery charge is low. Fully charge the batteries (page 11).

TGL46x(en)_0925_ver002.pdf 65 2015/09/25 20:59:20

Problem	Cause/solution
I fully charged the batteries, but – still flashes, – is displayed, or – the operating time seems to be shorter.	• Clean the battery ends (⊕, ⊖) and the charge contacts with a dry cloth and charge again. • It is time to replace the batteries (page 10).

Making/answering calls, intercom

Problem	Cause/solution
is displayed.	• The handset is too far from the base unit. Move closer. • The base unit's AC adaptor is not properly connected. Reconnect AC adaptor to the base unit. • The handset is not registered to the base unit. Register it (page 44).
Noise is heard, sound cuts in and out.	• You are using the handset or base unit in an area with high electrical interference. Re-position the base unit and use the handset away from sources of interference. • Move closer to the base unit. • If you use a DSL/ADSL service, we recommend connecting a DSL/ADSL filter between the base unit and the telephone line jack. Contact your DSL/ADSL provider for details.
The handset or base unit does not ring.	• The ringer volume for landline is turned off. Adjust the ringer volume (page 21, 37). • The ringer volume for cellular line is turned off. Adjust the ringer volume (page 21, 35). • The unit which is not selected to ring for cellular calls does not ring. To change the selection, see page 17. • Silent mode is turned on. Turn it off (page 41).
I cannot make local calls with the handset or base unit using a cellular line.	• You need to add your area code when making cellular calls. Store your area code in order to automatically add it to the beginning of the 7-digit phone number when making cellular calls (page 19).
I cannot make or answer cellular calls with the handset or base unit.	• Depending on the cellular phone's compatibility (page 5), you may not be able to make or answer cellular calls even if the cellular phone is connected to the base unit. • Make sure that the CELL indicator lights up and the cellular phone is connected to the base unit (page 18). • Only 2 Bluetooth devices can be used with the unit at the same time (for example, 2 cellular lines, or the headset and 1 cellular line). • The cellular phone is being used separately from your system.

TGL46x(en)_0925_ver002.pdf 66 2015/09/25 20:59:20

Problem	Cause/solution
I can make and answer cellular calls but cannot hear a sound.	● The Bluetooth technology on your cellular phone may not be functioning normally. Turn off and on your cellular phone. ● Disconnect and reconnect the base unit AC adaptor and try again.
I cannot switch cellular calls from the unit to the cellular phone.	● Your cellular phone may not support this feature. Refer to the operating instructions of your cellular phone.
I cannot make a call using a landline.	● The dialing mode may be set incorrectly. Change the setting (page 15).
I cannot use a cellular line or a landline.	● The unit can be used to talk on 2 lines at the same time (for example, 2 cellular lines, or the landline and 1 cellular line).
I cannot make long distance calls.	● Make sure that you have long distance service.

Caller ID/Talking Caller ID

Problem	Cause/solution
Caller information is not displayed.	● You must subscribe to Caller ID service. Contact your phone service provider for details. ● If your unit is connected to any additional telephone equipment such as a Caller ID box or cordless telephone line jack, plug the unit directly into the wall jack. ● If you use a DSL/ADSL service, we recommend connecting a DSL/ADSL filter between the base unit and the telephone line jack. Contact your DSL/ADSL provider for details. ● The name display service for landline calls may not be available in some areas. Contact your phone service provider for details. ● Other telephone equipment may be interfering with this unit. Disconnect the other equipment and try again.
Caller information is displayed or announced late.	● Depending on your phone service provider, the unit may display or announce the caller's information at the 2nd ring or later. ● Move closer to the base unit.

TGL46x(en)_0925_ver002.pdf 67 2015/09/25 20:59:20

Problem	Cause/solution
Caller information is not announced.	● The ringer volume for landline is turned off. Adjust the ringer volume (page 37, 37). ● The ringer volume for cellular line is turned off. Adjust the ringer volume (page 35, 35). ● The unit which is not selected to ring for cellular calls does not announce caller information. To change the selection, see page 17. ● The Talking Caller ID feature is turned off. Turn it on (page 37, xx). ● The ring as cell mode is set to **"On (without Talking CID)"**. To change the mode, see page 17. ● The number of rings for the answering system is set to **"2 rings"** or **"Toll saver"**. Select a different setting (page 58). ● Your unit does not announce caller information while the other devices such as headset or handsets are engaged in a call.
The caller list/incoming phone numbers are not edited automatically.	● The Caller ID number auto edit feature is turned off. Turn it on and try again (page 39). ● You need to call back the edited number to activate Caller ID number auto edit.
I cannot dial the phone number edited in the caller list.	● The phone number you dialed might have been edited incorrectly (for example, the long distance "1" or the area code is missing). Edit the phone number with another pattern (page 46).
Time on the unit has shifted.	● Incorrect time information from incoming Caller ID changes the time. Set the time adjustment to **"Manual"** (off) (page 37).
The 2nd caller's information is not displayed during an outside call.	● In order to use Caller ID, call waiting, or Call Waiting Caller ID (CWID), you must first contact your phone service provider and subscribe to the desired service. After subscribing, you may need to contact your phone service provider again to activate this specific service, even if you already subscribed to both Caller ID and Call Waiting with Caller ID services (CWID).

TGL46x(en)_0925_ver002.pdf 68 2015/09/25 20:59:20

Using Bluetooth devices

Problem	Cause/solution
I cannot copy phonebook entries from a cellular phone.	● Confirm that the cellular phone supports Bluetooth wireless technology. ● Confirm that the cellular phone supports the Phone Book Access Profile (PBAP) or Object Push Profile (OPP) specification. ● If the cellular phone is already connected to another Bluetooth device such as a Bluetooth headset, turn it off or disconnect it from the cellular phone. ● Someone is using a cellular line or headset. Try again later. ● Turn the cellular phone off, then turn it on and try again. ● If an entry is already stored in the unit's phonebook, the entry cannot be copied even by selecting another group. ● iPhone does not support individual phonebook copy.
I cannot have a conversation using the headset. or I cannot connect my headset to the base unit.	● Confirm that the Bluetooth wireless headset supports the HeadSet Profile (HSP) specification. ● Your Bluetooth headset is not paired. Pair it (page 51). ● Turn your headset off, then turn it on and try again. ● If your headset is already connected to another Bluetooth device such as your cellular phone, disconnect the headset from your cellular phone, then perform the connecting procedure from the base unit. ● Only 2 Bluetooth devices can be used with the unit at the same time (for example, 2 cellular lines, or the headset and 1 cellular line).
Noise is heard during a call on the headset.	● A Bluetooth headset can communicate with the base unit within a range of approximately 10 m (33 feet). The connection may be subject to interference from obstructions such as walls or electronic devices. Move closer to the base unit.
Some headset enhanced features are not available.	● The base unit does not support enhanced features such as Last number redial or Call reject.
An error tone is heard when I try to program the Bluetooth feature.	● The Bluetooth feature cannot be accessed immediately after connecting the AC adaptor to the base unit. Wait a few seconds and try again. ● The headset has not connected to the base unit yet, even though you performed the connecting procedure setting. Wait a few seconds and try again.

TGL46x(en)_0925_ver002.pdf 69 2015/09/25 20:59:20

Problem	Cause/solution
App alert is not displayed or announced. or Text message alert is not displayed or announced.	• Confirm that the cellular phone supports the Message Access Profile (MAP) specification to use text message alert feature. • Confirm that the cellular phone supports the Serial Port Profile (SPP) specification to use App alert feature. • Confirm that the **[Application Alerts manager]** setting of your Android phone is turned on. • **"Alert On/Off"** is set to **"Off"**. Set it to **"On"** (page 50). • **"Voice alert"** is set to **"Off"**. Set it to **"On"** (page 50). • The Bluetooth device's Bluetooth notifications setting is turned off. • The handset selected to display and/or announce alerts is in use. • The Bluetooth device or its corresponding cellular line is in use. • Your cellular phone's Bluetooth feature is turned off. Turn it on.

Answering system

Problem	Cause/solution
The unit does not record new messages.	• The answering system is turned off. Turn it on (page 53). • The answering system does not answer or record calls from cellular lines. • The message memory is full. Erase unnecessary messages (page 54, 55). • The recording time is set to **"Greeting only"**. Change the setting (page 59). • Your phone service provider's voicemail service may be answering your calls before the unit's answering system can answer your calls. Change the unit's number of rings setting (page 58) to a lower value, or contact your phone service provider. • The answering system will not answer incoming calls while the other devices such as headset or handsets are engaged in a call.
I cannot operate the answering system remotely.	• The remote access code is not set. Set the remote access code (page 57). • You are entering the wrong remote access code. If you have forgotten your remote access code, enter the remote access code setting to check your current code (page 57). • The answering system is turned off. Turn it on (page 58). • You cannot operate the answering system when calling a cellular phone paired to the base unit.

Problem	Cause/solution
The unit does not emit the specified number of rings.	• If the ring once setting is turned off (page 27), the number of rings decreases by 1 from the specified number of rings.

Bluetooth PIN

Problem	Cause/solution
I cannot remember the PIN.	• Change the PIN using the following method. **Handset:** **1** **【MENU】**#61 9 **2** *0000 **3** Enter the new 4-digit PIN. → **【OK】** **4** Enter the new 4-digit PIN again. → **【SAVE】** → **【OFF】**

Voicemail

Problem	Cause/solution
"Voicemail msg. via phone co." is shown on the handset display. How do I remove this message from the display?	• This notification is displayed when your phone service provider's voicemail service (not the unit's answering system) has recorded a message for you. Typically you can remove this notification from the display by listening to the message. To listen to the message, dial the voicemail number provided by your phone service provider (for most cases, this will be your own phone number), and follow the voice instructions. Depending on your phone service provider, you may need to remove all messages from your voice mailbox to remove the notification. You can also remove this notification by pressing and holding # until the unit beeps.

Liquid damage

Problem	Cause/solution
Liquid or other form of moisture has entered the handset/base unit.	• Disconnect the AC adaptor and telephone line cord from the base unit. Remove the batteries from the handset and leave to dry for at least 3 days. After the handset/base unit are completely dry, reconnect the AC adaptor and telephone line cord. Insert the batteries and charge fully before use. If the unit does not work properly, contact an authorized service center.

Caution:

• To avoid permanent damage, do not use a microwave oven to speed up the drying process.

TGL46x(en)_0925_ver002.pdf 71 2015/09/25 20:59:20

FCC and other information

This equipment complies with Part 68 of the FCC rules and the requirements adopted by the ACTA. On the bottom of this equipment is a label that contains, among other information, a product identifier in the format US:ACJ----------.
If requested, this number must be provided to the telephone company.

- Registration No.....(found on the bottom of the unit)
- Ringer Equivalence No. (REN).....0.1B

A plug and jack used to connect this equipment to the premises wiring and telephone network must comply with the applicable FCC Part 68 rules and requirements adopted by the ACTA. A compliant telephone cord and modular plug is provided with the product. It is designed to be connected to a compatible modular jack that is also compliant.

The REN is used to determine the number of devices that may be connected to a telephone line. Excessive RENs on a telephone line may result in the devices not ringing in response to an incoming call. In most but not all areas, the sum of RENs should not exceed five (5.0). To be certain of the number of devices that may be connected to a line, as determined by the total RENs, contact the local telephone company. For products approved after July 23, 2001, the REN for the product is part of the product identifier that has the format US:AAAEQ##TXXXX. The digits represented by ## are the REN without a decimal point (e.g., 03 is a REN of 0.3).

If this equipment causes harm to the telephone network, the telephone company will notify you in advance that temporary discontinuance of service may be required. But if advance notice isn't practical, the telephone company will notify the customer as soon as possible. Also, you will be advised of your right to file a complaint with the FCC if you believe it is necessary.

The telephone company may make changes in its facilities, equipment, operations or procedures that could affect the operation of the equipment. If this happens the telephone company will provide advance notice in order for you to make necessary modifications to maintain uninterrupted service.

If trouble is experienced with this equipment, for repair or warranty information, please contact a Factory Service Center or other Authorized Servicer. If the equipment is causing harm to the telephone network, the telephone company may request that you disconnect the equipment until the problem is resolved.

Connection to party line service is subject to state tariffs. Contact the state public utility commission, public service commission or corporation commission for information.

If your home has specially wired alarm equipment connected to the telephone line, ensure the installation of this equipment does not disable your alarm equipment. If you have questions about what will disable alarm equipment, consult your telephone company or a qualified installer.

This equipment is hearing aid compatible as defined by the FCC in 47 CFR Section 68.316.

When you hold the phone to your ear, noise might be heard in your Hearing Aid. Some Hearing Aids are not adequately shielded from external RF (radio frequency) energy. If noise occurs, use an optional headset accessory or the speakerphone option (if applicable) when using this phone. Consult with your audiologist or Hearing Aid

TGL46x(en)_0925_ver002.pdf 72 2015/09/25 20:59:20

manufacturer about the availability of Hearing Aids which provide adequate shielding to RF energy commonly emitted by digital devices.

WHEN PROGRAMMING EMERGENCY NUMBERS AND(OR) MAKING TEST CALLS TO EMERGENCY NUMBERS:
1) Remain on the line and briefly explain to the dispatcher the reason for the call.
2) Perform such activities in the off-peak hours, such as early morning or late evenings.

This device complies with Part 15 of the FCC Rules. Operation is subject to the following two conditions:
(1) This device may not cause harmful interference, and (2) this device must accept any interference received, including interference that may cause undesired operation.
Privacy of communications may not be ensured when using this phone.

CAUTION:
Any changes or modifications not expressly approved by the party responsible for compliance could void the user's authority to operate this device.

NOTE:
This equipment has been tested and found to comply with the limits for a Class B digital device, pursuant to Part 15 of the FCC Rules. These limits are designed to provide reasonable protection against harmful interference in a residential installation. This equipment generates, uses, and can radiate radio frequency energy and, if not installed and used in accordance with the instructions, may cause harmful interference to radio communications. However, there is no guarantee that interference will not occur in a particular installation. If this equipment does cause harmful interference to radio or television reception, which can be determined by turning the equipment off and on, the user is encouraged to try to correct the interference by one or more of the following measures:
– Reorient or relocate the receiving antenna.
– Increase the separation between the equipment and receiver.
– Connect the equipment into an outlet on a circuit different from that to which the receiver is connected.
– Consult the dealer or an experienced radio/TV technician for help.

Some cordless telephones operate at frequencies that may cause interference to nearby TVs and VCRs. To minimize or prevent such interference, the base of the cordless telephone should not be placed near or on top of a TV or VCR. If interference is experienced, move the cordless telephone further away from the TV or VCR. This will often reduce or eliminate interference.

FCC RF Exposure Warning:
- This product complies with FCC radiation exposure limits set forth for an uncontrolled environment.
- To comply with FCC RF exposure requirements, the base unit must be installed and operated 20 cm (8 inches) or more between the product and all person's body.
- This product may not be collocated or operated in conjunction with any other antenna or transmitter.
- For body-worn operation, the handset must be used only with a non-metallic accessory. Use of other accessories may not ensure compliance with FCC RF exposure requirements.

Notice:
- FCC ID can be found inside the battery compartment or on the bottom of the units.

TGL46x(en)_0925_ver002.pdf 73 2015/09/25 20:59:21

Compliance with TIA-1083 standard:
Telephone handsets identified with this logo have reduced noise and interference when used with T-Coil equipped hearing aids and cochlear implants.

TGL46x(en)_0925_ver002.pdf 74 2015/09/25 20:59:21

Guía Rápida Española

TGL46x(en)_0925_ver002.pdf 75 2015/09/25 20:59:21

TGL46x(en)_0925_ver002.pdf 76 2015/09/25 20:59:21

TGL46x(en)_0925_ver002.pdf 77 2015/09/25 20:59:21

TGL46x(en)_0925_ver002.pdf 78 2015/09/25 20:59:21

TGL46x(en)_0925_ver002.pdf 79 2015/09/25 20:59:21

TGL46x(en)_0925_ver002.pdf 80 2015/09/25 20:59:21

TGL46x(en)_0925_ver002.pdf 81 2015/09/25 20:59:21

TGL46x(en)_0925_ver002.pdf 82 2015/09/25 20:59:21

TGL46x(en)_0925_ver002.pdf 83 2015/09/25 20:59:21

TGL46x(en)_0925_ver002.pdf 84 2015/09/25 20:59:21

Customer services

Shop Accessories!

for all your Panasonic gear

Go to

http://shop.panasonic.com/support

Get everything you need to get the most out of your Panasonic products
Accessories & Parts for your Camera, Phone, A/V products, TV, Computers & Networking, Personal Care, Home Appliances, Headphones, Batteries, Backup Chargers & more…

Customer Services Directory

For Product Information, Operating Assistance, Parts, Owner's Manuals, Dealer and Service info go to http://shop.panasonic.com/support

For the hearing or speech impaired TTY: 1- 877-833-8855

As of June 2015

TGL46x(en)_0925_ver002.pdf 85 2015/09/25 20:59:21

Limited Warranty (ONLY FOR U.S.A.)

Panasonic Products Limited Warranty

Limited Warranty Coverage (For USA Only)

If your product does not work properly because of a defect in materials or workmanship, Panasonic Corporation of North America (referred to as “the warrantor”) will, for the length of the period indicated on the chart below, which starts with the date of original purchase (“warranty period”), at its option either (a) repair your product with new or refurbished parts, (b) replace it with a new or a refurbished equivalent value product, or (c) refund your purchase price. The decision to repair, replace or refund will be made by the warrantor.

Product or Part Name	Parts	Labor
Telephone	One (1) Year	One (1) Year

During the “Labor” warranty period there will be no charge for labor. During the “Parts” warranty period, there will be no charge for parts. This Limited Warranty excludes both parts and labor for non-rechargeable batteries, antennas, and cosmetic parts (cabinet). This warranty only applies to products purchased and serviced in the United States. This warranty is extended only to the original purchaser of a new product which was not sold “as is”.

Mail-In Service--Online Repair Request

Online Repair Request

To submit a new repair request and for quick repair status visit our Web Site at http://shop.panasonic.com/support

When shipping the unit, carefully pack, include all supplied accessories listed in the Owner’s Manual, and send it prepaid, adequately insured and packed well in a carton box. When shipping Lithium Ion batteries please visit our Web Site at http://shop.panasonic.com/support as Panasonic is committed to providing the most up to date information. Include a letter detailing the complaint, a return address and provide a daytime phone number where you can be reached. A valid registered receipt is required under the Limited Warranty.

IF REPAIR IS NEEDED DURING THE WARRANTY PERIOD, THE PURCHASER WILL BE REQUIRED TO FURNISH A SALES RECEIPT/PROOF OF PURCHASE INDICATING DATE OF PURCHASE, AMOUNT PAID AND PLACE OF PURCHASE. CUSTOMER WILL BE CHARGED FOR THE REPAIR OF ANY UNIT RECEIVED WITHOUT SUCH PROOF OF PURCHASE.

TGL46x(en)_0925_ver002.pdf 86 2015/09/25 20:59:21

Limited Warranty Limits and Exclusions

This warranty ONLY COVERS failures due to defects in materials or workmanship, and DOES NOT COVER normal wear and tear or cosmetic damage. The warranty ALSO DOES NOT COVER damages which occurred in shipment, or failures which are caused by products not supplied by the warrantor, or failures which result from accidents, misuse, abuse, neglect, mishandling, misapplication, alteration, faulty installation, set-up adjustments, misadjustment of consumer controls, improper maintenance, power line surge, lightning damage, modification, introduction of sand, humidity or liquids, commercial use such as hotel, office, restaurant, or other business or rental use of the product, or service by anyone other than a Factory Service Center or other Authorized Servicer, or damage that is attributable to acts of God.

THERE ARE NO EXPRESS WARRANTIES EXCEPT AS LISTED UNDER "LIMITED WARRANTY COVERAGE".

THE WARRANTOR IS NOT LIABLE FOR INCIDENTAL OR CONSEQUENTIAL DAMAGES RESULTING FROM THE USE OF THIS PRODUCT, OR ARISING OUT OF ANY BREACH OF THIS WARRANTY.

(As examples, this excludes damages for lost time, travel to and from the servicer, loss of or damage to media or images, data or other memory or recorded content. The items listed are not exclusive, but for illustration only.)

ALL EXPRESS AND IMPLIED WARRANTIES, INCLUDING THE WARRANTY OF MERCHANTABILITY, ARE LIMITED TO THE PERIOD OF THE LIMITED WARRANTY.

Some states do not allow the exclusion or limitation of incidental or consequential damages, or limitations on how long an implied warranty lasts, so the exclusions may not apply to you. This warranty gives you specific legal rights and you may also have other rights which vary from state to state. If a problem with this product develops during or after the warranty period, you may contact your dealer or Service Center. If the problem is not handled to your satisfaction, then write to:

Consumer Affairs Department
Panasonic Corporation of North America
661 Independence Pkwy
Chesapeake, VA 23320

PARTS AND SERVICE, WHICH ARE NOT COVERED BY THIS LIMITED WARRANTY, ARE YOUR RESPONSIBILITY.

As of June 2015

TGL46x(en)_0925_ver002.pdf 87 2015/09/25 20:59:21

Index

3-way conference: *23*

A Additional handset: *44*
Alarm: *40*
Answering calls: *21*
Answering system
Call screening: *58*
Erasing messages: *54*, *55*, *58*
Greeting message: *53*
Greeting only: *59*
Listening to messages: *54*, *57*
New message alerting: *55*
Number of rings: *58*
Recording time: *59*
Remote access code: *57*
Remote operation: *57*
Ring count: *58*
Toll saver: *58*
Turning on/off: *53*
Auto intercom: *25*
Auto talk: *21*, *39*

B Baby monitor: *42*
Battery: *10*, *11*
Bluetooth wireless technology
Cellular phone (Link to cell): *16*
Headset: *51*
Phonebook transfer: *48*
Booster (Clarity booster): *22*

C Call block: *26*
One ring for blocked call: *27*
Call share: *23*, *39*
Call waiting: *22*
Call Waiting Caller ID: *22*
Caller ID number auto edit: *39*, *46*
Caller ID service: *45*
Caller list: *45*
Caller list edit: *46*
Cellular calls: *20*
Cellular phone
Pairing: *16*
Unpairing: *16*
Chain dial: *31*
CID (Caller ID): *45*, *46*
Conference calls: *23*
Control type: *12*
Customer support: *39*

D Date and time: *14*
Dialing mode: *15*
Direct command code: *33*
Display
Contrast: *38*
Language: *14*

E Eco mode: *11*
Equalizer: *23*
Error messages: *63*

F Flash: *22*, *39*

G Groups: *30*

H Handset
Deregistration: *44*
Name: *43*
Registration: *44*
Hold: *22*

I Intercom: *24*

K Key detector: *38*, *40*
Key tone: *38*

L Landline calls: *20*
Line mode: *39*
Link to cell
Alert settings for your DECT phone: *50*
Area code: *19*
Auto connection: *17*
Cellular line only mode: *18*
Cellular line selection: *19*
Connection: *18*
Link to Cell app: *49*
Ring as cell mode: *17*
Select unit to ring: *17*
Text message (SMS: Short Message Service) alert: *50*

M Making calls: *20*
Missed calls: *45*
Mute: *22*

N Noise reduction: *23*

P Pause: *20*
Phonebook: *29*
PIN: *19*
Power failure: *11*

R Redialing: *21*
Ringer ID: *30*
Ringer tone: *35*, *37*
Rotary/pulse service: *22*

S Silent mode: *41*
Speed dial: *31*
SP-PHONE (Speakerphone): *20*

T Talking Caller ID: *45*
Temporary tone dialing: *22*
Time adjustment: *37*
Transferring calls: *23*

TGL46x(en)_0925_ver002.pdf 88 2015/09/25 20:59:21

Troubleshooting: *64*
TTY: *85*

V VM (Voicemail): *60*
Voice announcement language: *14*
Voice paging: *25*
Voicemail: *58*, *60*
Volume
Receiver: *20*
Ringer (Base unit): *21*, *35*, *37*
Ringer (Handset): *21*, *35*, *37*
Ringer for intercom call (Handset): *37*
Ringer for outside call (Handset): *21*, *35*, *37*
Speaker: *20*

W Wall mounting: *61*

TGL46x(en)_0925_ver002.pdf 89 2015/09/25 20:59:21

Notes

TGL46x(en)_0925_ver002.pdf 90 2015/09/25 20:59:21

TGL46x(en)_0925_ver002.pdf 91 2015/09/25 20:59:21

IMPORTANT!

If your product is not working properly. . .

① **Reconnect AC adaptor to the base unit.**
② **Check if telephone line cord is connected.**
③ **Use rechargeable Ni-MH batteries.**
(Alkaline/Manganese/Ni-Cd batteries CANNOT be used.)
④ Read **troubleshooting** page in the **Operating Instructions**.

Visit our Web site: http://shop.panasonic.com/support
- **FAQ and troubleshooting hints are available.**

For your future reference
We recommend keeping a record of the following information to assist with any repair under warranty.

Serial No.	Date of purchase
(found on the bottom of the base unit)	
Name and address of dealer	

Attach your purchase receipt here.

Panasonic Corporation of North America
Two Riverfront Plaza, Newark, NJ 07102-5490

© Panasonic System Networks Co., Ltd. 2015

Printed in Vietnam

PNQX7782ZA

PNQX7782ZA TT1115WK0