OH_S_

1SCC390064M0001 Document no. 34 OH_S 1-2 A

OH_1: Type 1
OH_2: Type 1,3R, 12

Label should be affixed to the rear mounting surface immediately adjacent the handle after installation.

E63822

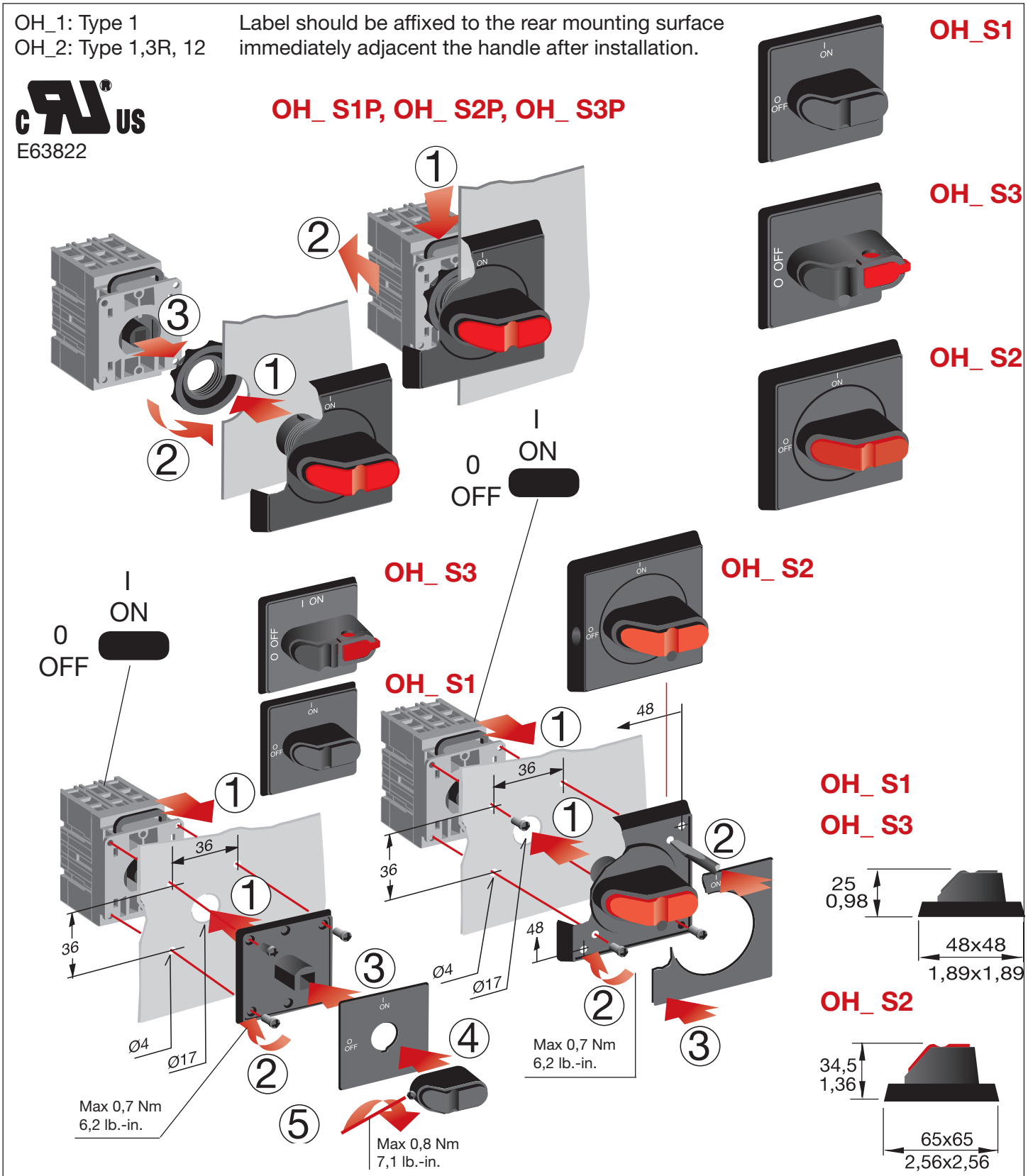

OH_S_

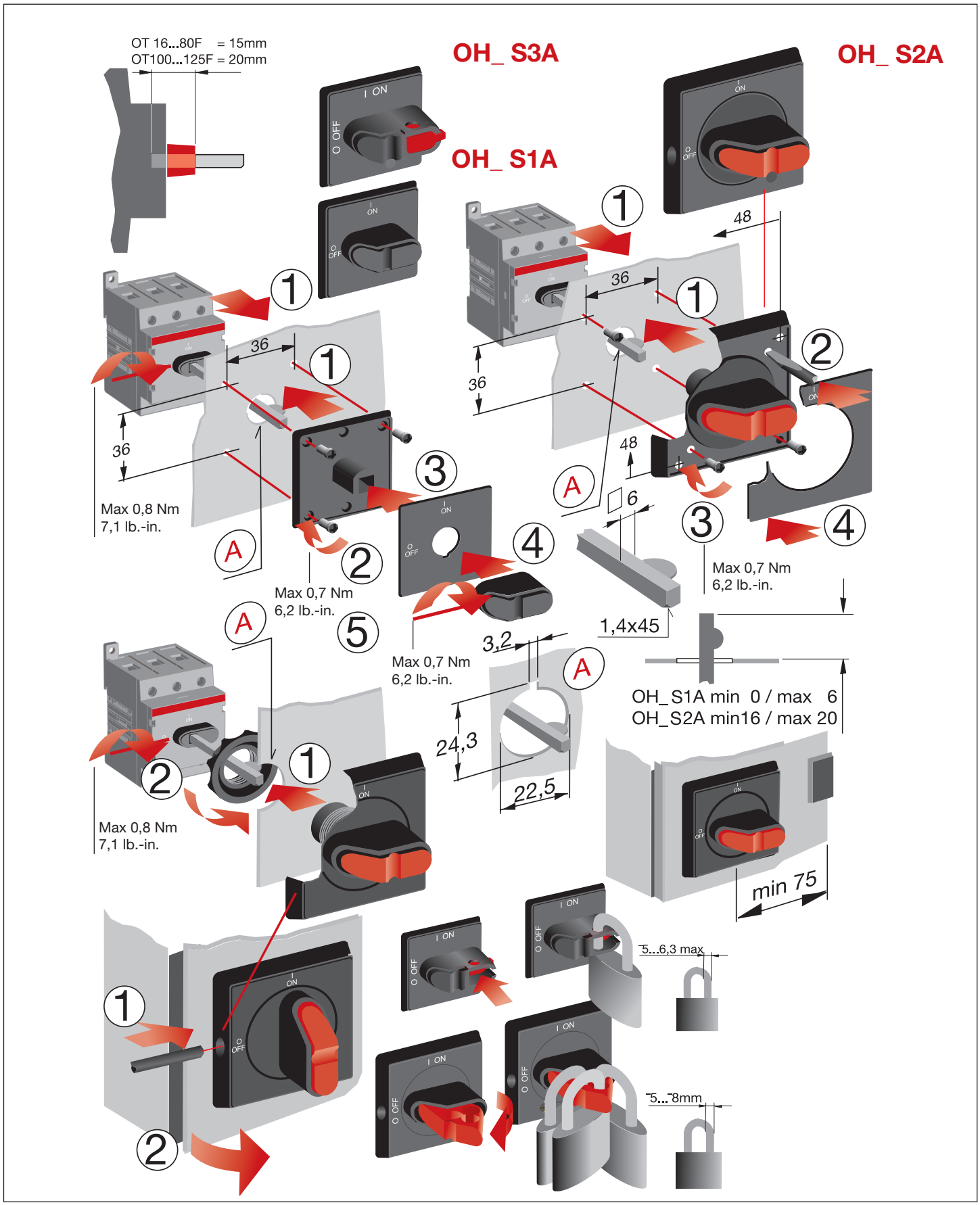

ABB Oy
Low Voltage Products
P.O. Box 622
FIN-65101 Vaasa, Finland

Telephone +358-10 224 000
Telefax +358-10 224 5708