KOMPLETTSCHEMA WM50: 80 643 93-02

S:\UWMD20\1_Tryckunderlag\Kopplingsschema\8064394 Kopplingsschema WM50\80643 94 Kwm50-02.dft , pema , 2004-06-02 10:18:04

BA:	TUB / BALJA
BO:	BOTTOM / BOTTEN
INKB:	MAIN TERMINAL BLOCK / INKOPPLINGSPLINT
TG:	TACHOGENERATOR / TACHOGENERATOR
RO:	ROTOR / ROTOR
R:	RELAY / RELÄ
EL:	HEATER / VÄRMEELEMENT
AP:	DRAIN PUMP / AVLOPPSPUMP
TH:	THERMISTOR / TERMISTOR
LM:	DOOR SOLENOID / LUCKMAGNET
OF:	OVERFLOW PROTECTION SWITCH / ÖVERSVÄMNINGSBRYTARE
IV1:	INLET VALVE PREWASH AND RINSE / INLOPPSVENTIL FÖRTVÄTT OCH SKJÖLJ
IV2:	INLET VALVE MAINWASH COLD / INLOPPSVENTIL HUVUDTVÄTT
IV3:	INLET VALVE MAINWASH HOT / INLOPPSVENTIL HUVUDTVÄTT VARMVATTEN
IV4:	INLET VALVE RINSE AGENT / INLOPPSVENTIL SKLÖJMEDEL
PCU:	PROGRAM CONTROL UNIT / PROGRAM KONTROLLENHET
LB:	DOOR SWITCH / LUCKBRYTARE
MF:	MOTOR BRACKET / MOTOR VAGGA
MO:	MOTOR / MOTOR
F:	FILTER / FILTER

INTERNAL CONNECTION / INTERN KOPPLING

ALTERNATIVE WIRING / ALTERNATIV KOPPLING

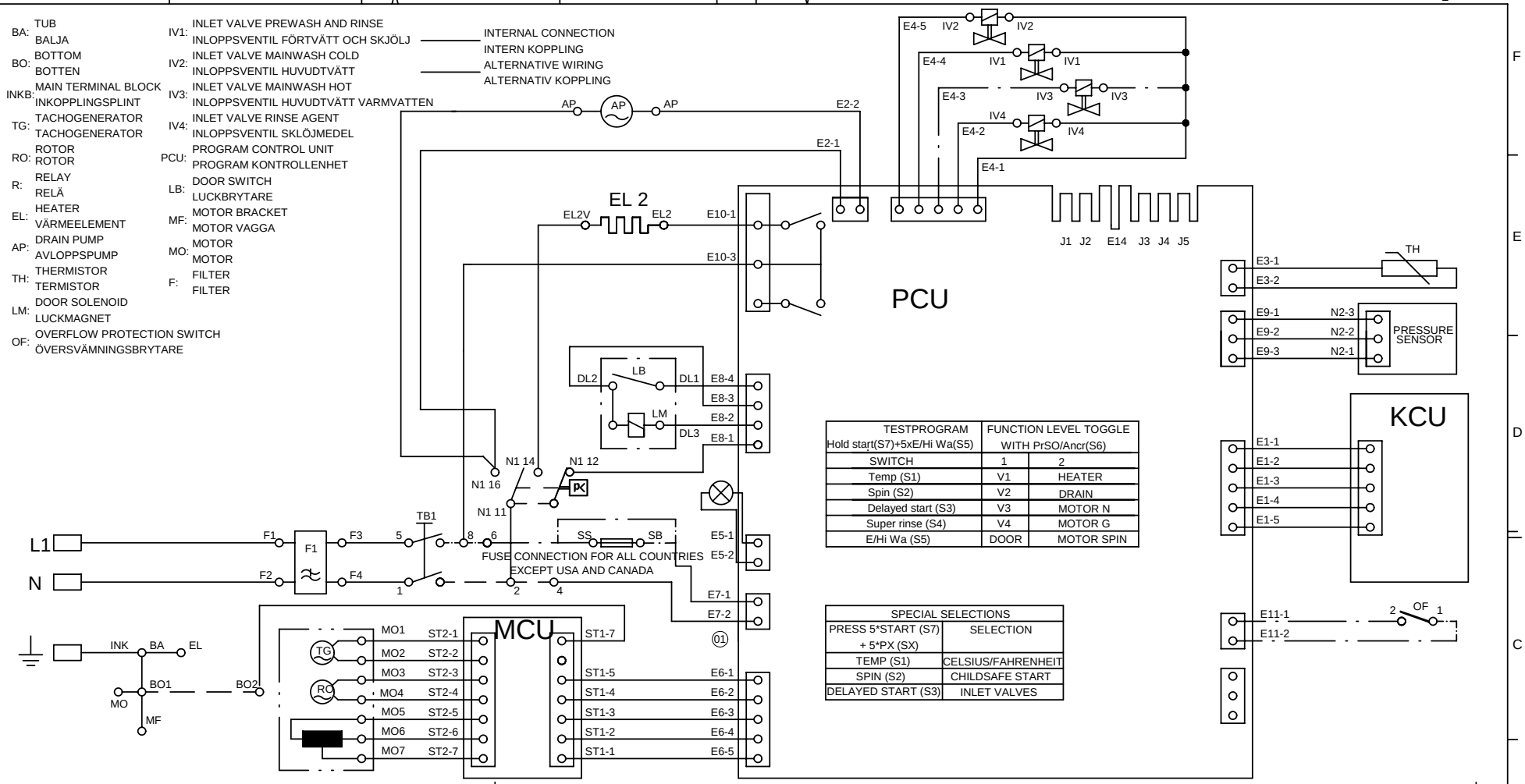

TESTPROGRAM Hold start(S7)+5xE/Hi Wa(S5)	FUNCTION LEVEL TOGGLE WITH PrSO/Ancr(S6)	
SWITCH	1	2
Temp (S1)	V1	HEATER
Spin (S2)	V2	DRAIN
Delayed start (S3)	V3	MOTOR N
Super rinse (S4)	V4	MOTOR G
E/Hi Wa (S5)	DOOR	MOTOR SPIN

SPECIAL SELECTIONS	
PRESS 5*START (S7) + 5*PX (SX)	SELECTION
TEMP (S1)	CELSIUS/FAHRENHEIT
SPIN (S2)	CHILDSAFE START
DELAYED START (S3)	INLET VALVES

POWER ON DOOR CLOSED
E1:1-E1:2 13 Vdc
E1:3 DATA IN
E1:4 CLOCK
E1:5 DATA OUT
E2:1-E2:2 230 Vac DRAIN PUMP ON
E3:1-E3:2 5 Vdc(THERMISTOR DISCONNECTED)
E4:1-E4:2 230 Vac IV4 ON
E4:1-E4:3 230 Vac IV3 ON
E4:1-E4:4 230 Vac IV1 ON
E4:1-E4:5 230 Vac IV2 ON
E5:1-E5:2 230 Vac
E6:1-E6:2 230 Vac
E6:4 DATA SERIELL
E6:3-E6:5 5 Vdc
E7:1-E7:2 230 Vac
E8:1-E8:4 0 V DOOR OPEN
E8:1-E8:4 230 Vac DOOR CLOSED
E8:2-E8:3 230 Vac DOOR SOLENOID ON 10 mS
E9:1-E9:3 5 Vdc
E9:1-E9:2 0,5 Vdc AT ZERO WATER PRESSURE
E10:1-E10:3 230 Vac HEATER OFF 0 V HEATER ON
E10:5-E10:3 230 Vac HEATER OFF 0 V HEATER ON
THE ABOVE REQUIRE THE LEVEL SWITCH IN POSITION N1 14
E11:1-E11:2 5 Vdc (OVERFILL 0 Vdc)
E12:1-E12:3 15 Vdc
E12:2 DATA SERIELL

WITH TERMINALBLOCK

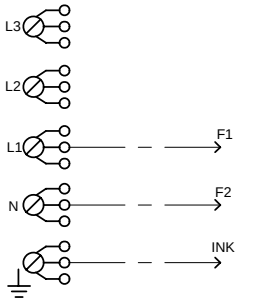

FUSE CONNECTION FOR USA & CANADA

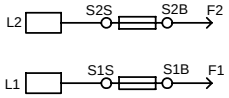

Rev ind	Revision	Appd	Year Week
02	Drawing adjustments	PM	04 23
01	Changed E7-1 and E7-2	PS	01 44

Pos.	Qty	Part No.	Name of item	Material

Material	Dens.Kg/dm3	Dimensions, Type, etc.
Scale 1:1	Gen.tolerance	Description(ENG) CIRCUIT DIAGRAM WM50
Designed by MS	Gen.tol.Angle	Description(SE) KOPPLINGSSCHEMA WM50
Released by	Iss by Dept UT / Year 01 / Week 22	80 643 94 / Rev Ind 02 / Replace 80 643 94-01
ASKO CYLINDA		Project

1FORMAT A3

This document must not be copied without our written permission, and the contents thereof must not be imparted to a third party nor be used for any unauthorized purpose. Contravention will be prosecuted. Asko Cylinda AB