Norlin®
NORLIN MUSIC, INC.

# Factory Service Bulletin

2500 WALDEN AVE. • BUFFALO, NEW YORK 14225 • UNITED STATES
51 NANTUCKET BLVD. • SCARBOROUGH, ONT. MIP 2N6 • CANADA
WAALHAVEN • Z.Z. 48 ROTTERDAM • THE NETHERLANDS

SUBJECT: SOURCE
All Serial Numbers

NUMBER: 827

DATE: 10/82

## SYMPTOMS

- "Plays by itself",
- Resets itself to Preset #1,
- "Freezes" or "Locks Up", making it necessary to turn the power off and on to reset it,
- Looses memory even though the battery soldering is good,
- Occasionally detunes oscillators,
- Various other symptoms which appear intermittent and/or vibration sensitive.

## CAUSE

Surface oxidation of the 5 volt digital regulator leads. U3 on the Power Supply Board.

## CURE

Remove U3 (7805), clean the leads with a pencil eraser and re-install. U3 is located under the row of connectors on the Power Supply and it is recommended that the leads of U3 be cleaned on <u>all</u> units returned for service.

## CONCLUSION

Cleaning the leads of U3 appears to be a permanent cure. Please note the MANUFACTURER AND DATE CODE of the particular regulator when one of the above symptoms surfaces and advise us so for continuing reliability evaluation.

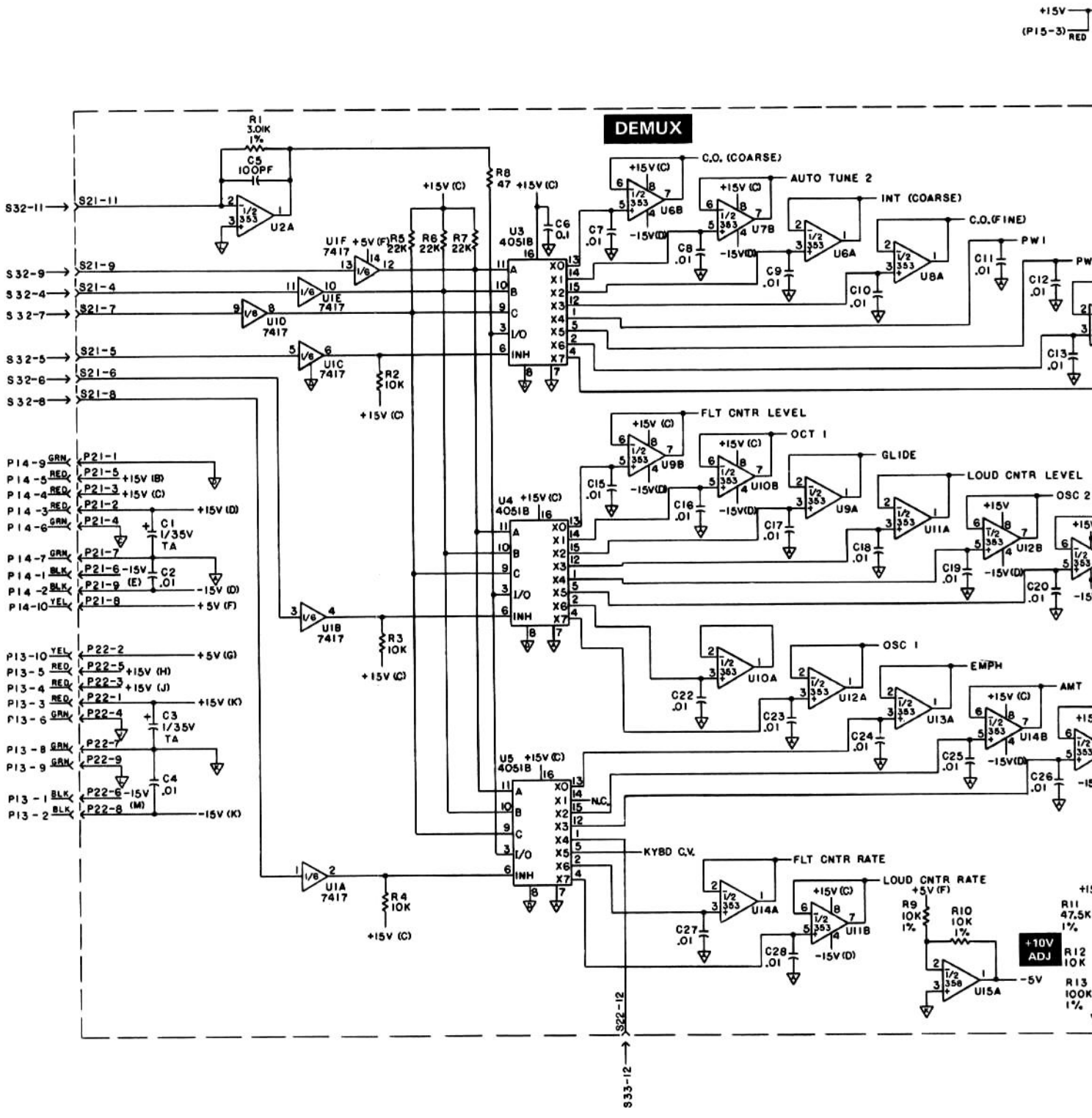
DEMUX
C.O. (COARSE)
AUTO TUNE 2
INT (COARSE)
C.O. (FINE)
PW1
FLT CNTR LEVEL
OCT 1
GLIDE
LOUD CNTR LEVEL
OSC 2
OSC 1
EMPH
AMT
KYBD C.V.
FLT CNTR RATE
LOUD CNTR RATE
+10V ADJ
U3 4051B
U4 4051B
U5 4051B
S32-11
S32-9
S32-4
S32-7
S32-5
S32-6
S32-8
S22-12
S33-12

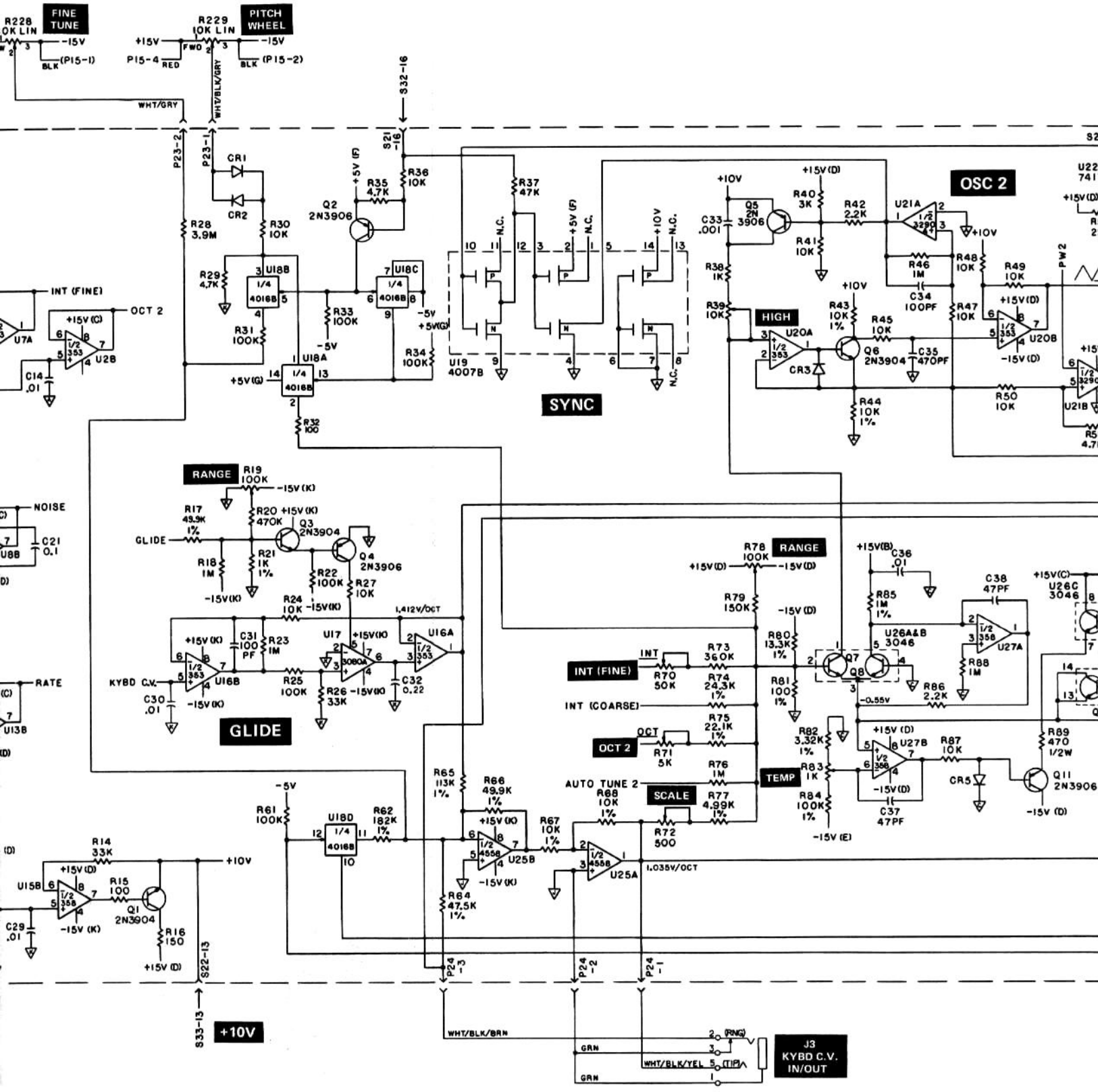
FINE TUNE
PITCH WHEEL
R228 10K LIN
R229 10K LIN
+15V
-15V
FWD
P15-4 RED
BLK (P15-1)
BLK (P15-2)
WHT/GRY
WHT/BLK/GRY
S32-16
S21-16
P23-2
P23-1
CR1
CR2
R28 3.9M
R30 10K
R29 4.7K
U18B
1/4 4016B
R31 100K
R33 100K
R34 100K
U18A
U18C
+5V (F)
R35 4.7K
R36 10K
Q2 2N3906
-5V
+5V(G)
R32 100
U19 4007B
N.C.
R37 47K
SYNC
+10V
+15V(D)
Q5 2N 3906
C33 .001
R40 3K
R42 2.2K
R41 10K
R38 1K
R39 10K
HIGH
U20A
CR3
R43 10K 1%
Q6 2N3904
R45 10K
C35 470PF
R44 10K 1%
U21A
1/2 3290
R46 1M
C34 100PF
R48 10K
R47 10K
OSC 2
R49 10K
U20B
R50 10K
U21B
PW2
INT (FINE)
OCT 2
+15V (C)
U7A
U2B
C14 .01
NOISE
C21 0.1
U8B
RATE
U13B
RANGE
R19 100K
-15V (K)
R17 49.9K 1%
R20 470K
+15V (K)
Q3 2N3904
GLIDE
R18 1M
R21 1K 1%
Q4 2N3906
R22 100K
R27 10K
R24 10K
1.412V/OCT
C31 100 PF
R23 1M
U17
3080A
U16A
1/2 353
KYBD C.V.
U16B
C30 .01
R25 100K
R26 33K
C32 0.22
GLIDE
R78 100K
R79 150K
R80 13.3K 1%
R81 100 1%
INT
R70 50K
R73 360K
R74 24.3K 1%
INT (COARSE)
OCT
R71 5K
R75 22.1K 1%
R76 1M
AUTO TUNE 2
R68 10K 1%
SCALE
R77 4.99K 1%
R72 500
TEMP
R82 3.32K 1%
R83 1K
R84 100K 1%
-15V (E)
U26A&B 3046
Q7
Q8
-0.55V
R85 1M 1%
C36 .01
R86 2.2K
C38 47PF
U27A
R88 1M
U27B
R87 10K
C37 47PF
CR5
R89 470 1/2W
Q11 2N3906
U26C 3046
R61 100K
U18D
1/4 4016B
R62 182K 1%
R65 113K 1%
R66 49.9K 1%
U25B
1/2 4558
R64 47.5K 1%
R67 10K 1%
U25A
1.035V/OCT
R14 33K
U15B
R15 100
Q1 2N3904
R16 150
C29 .01
S22-13
S33-13
+10V
P24-3
P24-2
P24-1
WHT/BLK/BRN
GRN
WHT/BLK/YEL
J3 KYBD C.V. IN/OUT
(RNG)
(TIP)

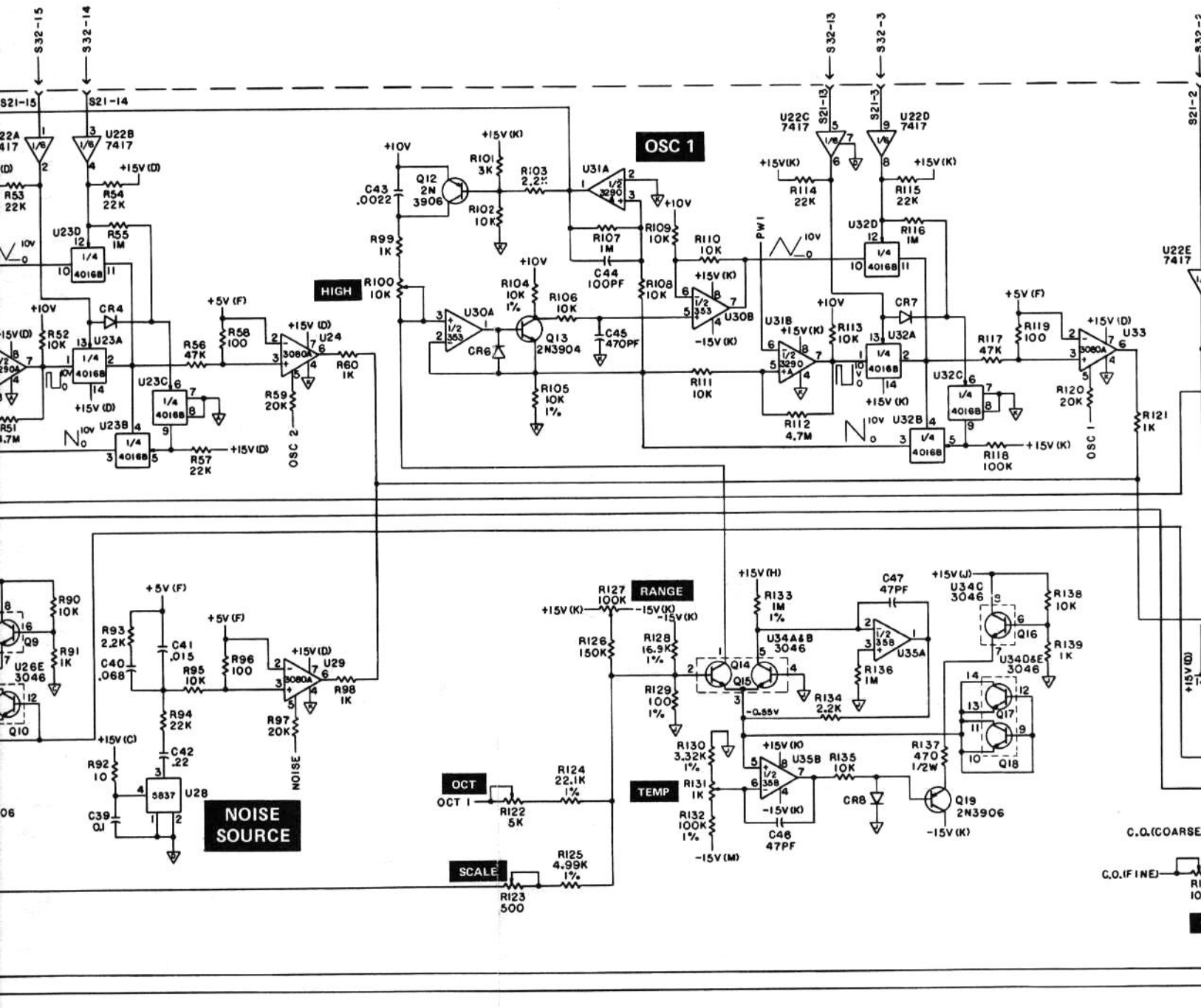


NOTES

1. UNLESS OTHERWISE SPECIFIED -
   ALL RESISTORS ARE IN OHMS 1/4W ±5%
   ALL CAPACITORS ARE IN MFD (μf)
   ALL DIODES ARE IN4148
   ALL ⏚ ARE (DIGITAL GND)
   ALL ⏚⏚⏚⏚⏚ ARE (ANALOG GND)

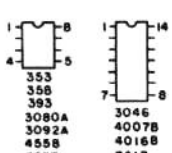

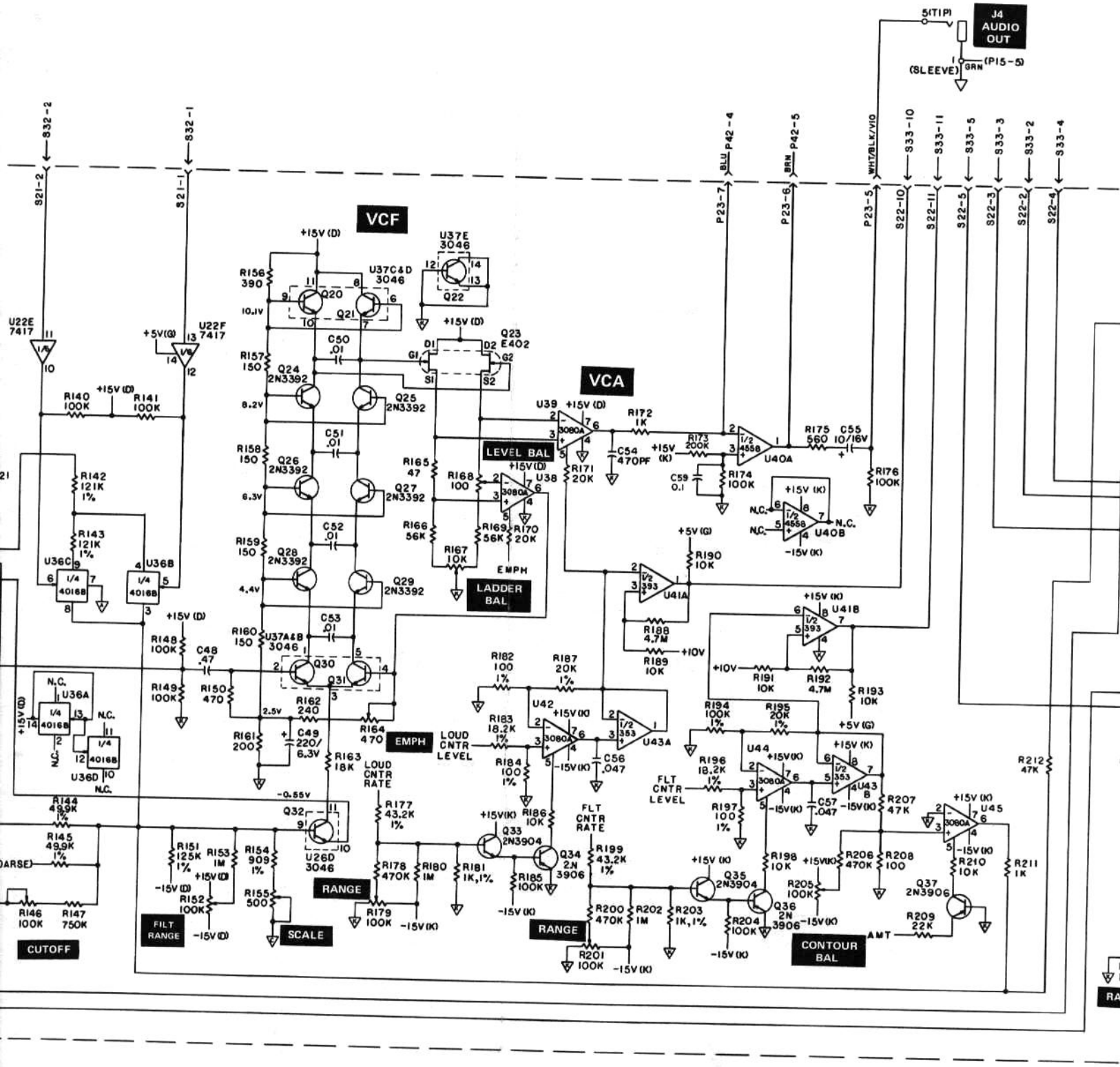


CONTOUR GENERATOR

COMPONENT BASING
TOP VIEW

THE

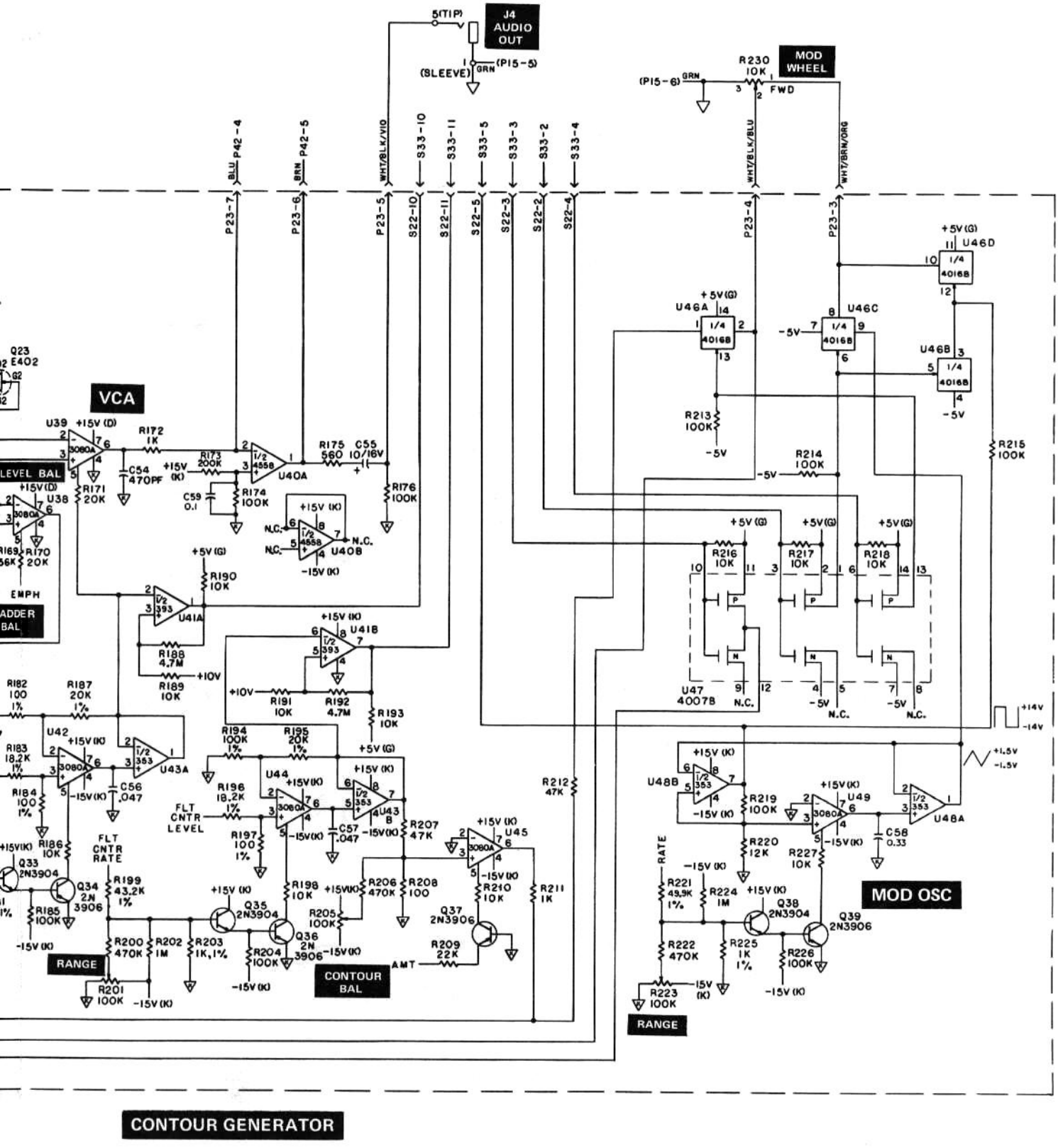


**BOARD 2**

*THE SOURCE SYNTHESIZER BOARD SCHEMATIC*

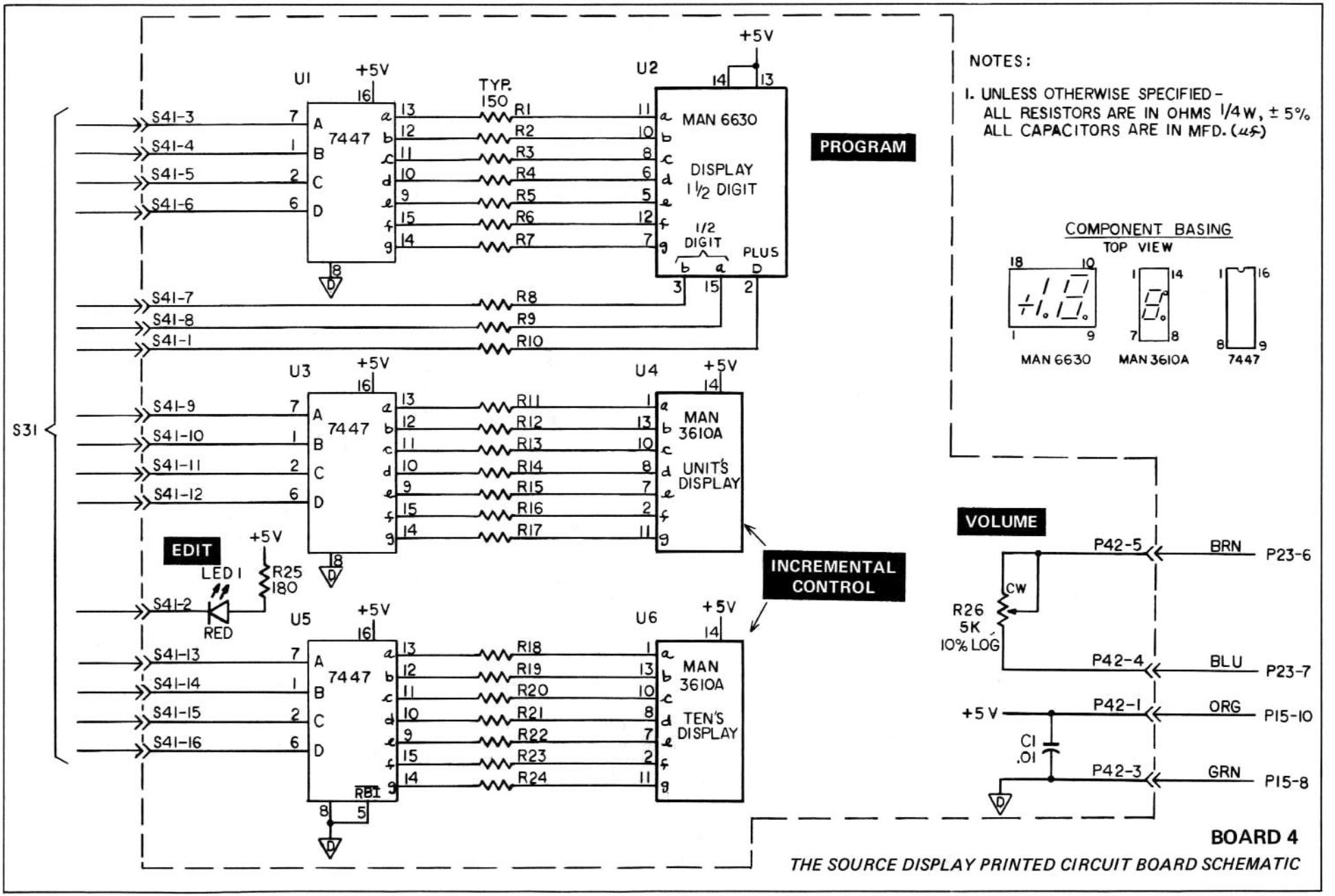
NOTES:
1. UNLESS OTHERWISE SPECIFIED -
ALL RESISTORS ARE IN OHMS 1/4 W, ± 5%
ALL CAPACITORS ARE IN MFD. (µf)
PROGRAM
U1
7447
U2
MAN 6630
DISPLAY
1 1/2 DIGIT
1/2 DIGIT
PLUS
TYP. 150
R1
R2
R3
R4
R5
R6
R7
R8
R9
R10
S41-3
S41-4
S41-5
S41-6
S41-7
S41-8
S41-1
S31
U3
U4
MAN 3610A
UNIT'S DISPLAY
R11
R12
R13
R14
R15
R16
R17
S41-9
S41-10
S41-11
S41-12
EDIT
LED 1
RED
R25 180
S41-2
INCREMENTAL CONTROL
U5
U6
TEN'S DISPLAY
R18
R19
R20
R21
R22
R23
R24
S41-13
S41-14
S41-15
S41-16
RBI
+5V
COMPONENT BASING
TOP VIEW
MAN 6630
MAN 3610A
7447
VOLUME
R26 5K 10% LOG
CW
C1 .01
P42-5
P42-4
P42-1
P42-3
BRN
BLU
ORG
GRN
P23-6
P23-7
P15-10
P15-8
BOARD 4
THE SOURCE DISPLAY PRINTED CIRCUIT BOARD SCHEMATIC

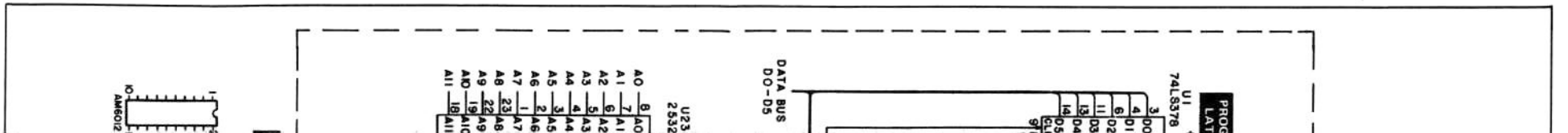
PROGRAM
LATCH
U1
74LS378
DATA BUS
D0-D5
U23
2532
AM6012

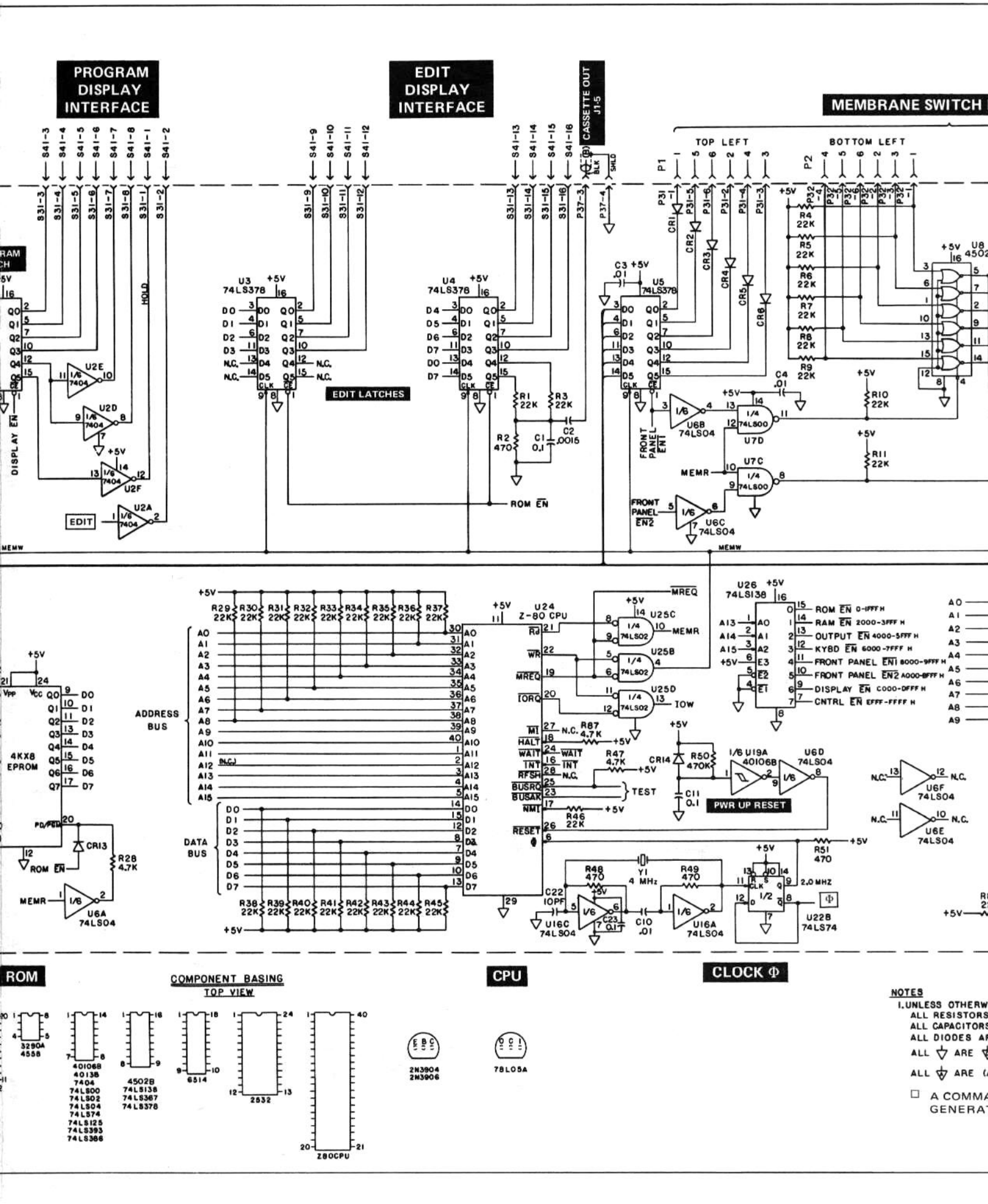
PROGRAM DISPLAY INTERFACE
EDIT DISPLAY INTERFACE
CASSETTE OUT J1-5
MEMBRANE SWITCH
TOP LEFT
BOTTOM LEFT
EDIT LATCHES
U3 74LS378
U4 74LS378
U5 74LS378
U2E 7404
U2D 7404
U2F 7404
U2A 7404
EDIT
DISPLAY EN
HOLD
ROM EN
FRONT PANEL EN1
FRONT PANEL EN2
MEMR
MEMW
U6B 74LS04
U6C 74LS04
U7D 74LS00
U7C 74LS00
U8 4502
U26 74LS138
ROM EN 0-1FFF H
RAM EN 2000-3FFF H
OUTPUT EN 4000-5FFF H
KYBD EN 6000-7FFF H
FRONT PANEL EN1 8000-9FFF H
FRONT PANEL EN2 A000-BFFF H
DISPLAY EN C000-DFFF H
CNTRL EN EFFF-FFFF H
U24 Z-80 CPU
U25C 74LS02
U25B 74LS02
U25D 74LS02
MREQ
IOW
ADDRESS BUS
DATA BUS
4KX8 EPROM
U6A 74LS04
U6F 74LS04
U6E 74LS04
U19A 40106B
U6D 74LS04
PWR UP RESET
Y1 4 MHz
U16C 74LS04
U16A 74LS04
U22B 74LS74
2.0 MHZ
ROM
CPU
CLOCK Φ
COMPONENT BASING
TOP VIEW
3290A 4558
4010B 4013B 7404 74LS00 74LS02 74LS04 74LS74 74LS125 74LS393 74LS386
4502B 74LS138 74LS367 74LS378
6514
2532
Z80CPU
2N3904 2N3906
78L05A
NOTES
1. UNLESS OTHERW
ALL RESISTORS
ALL CAPACITORS
ALL DIODES A
ALL ARE
ALL ARE
A COMMA
GENERAT

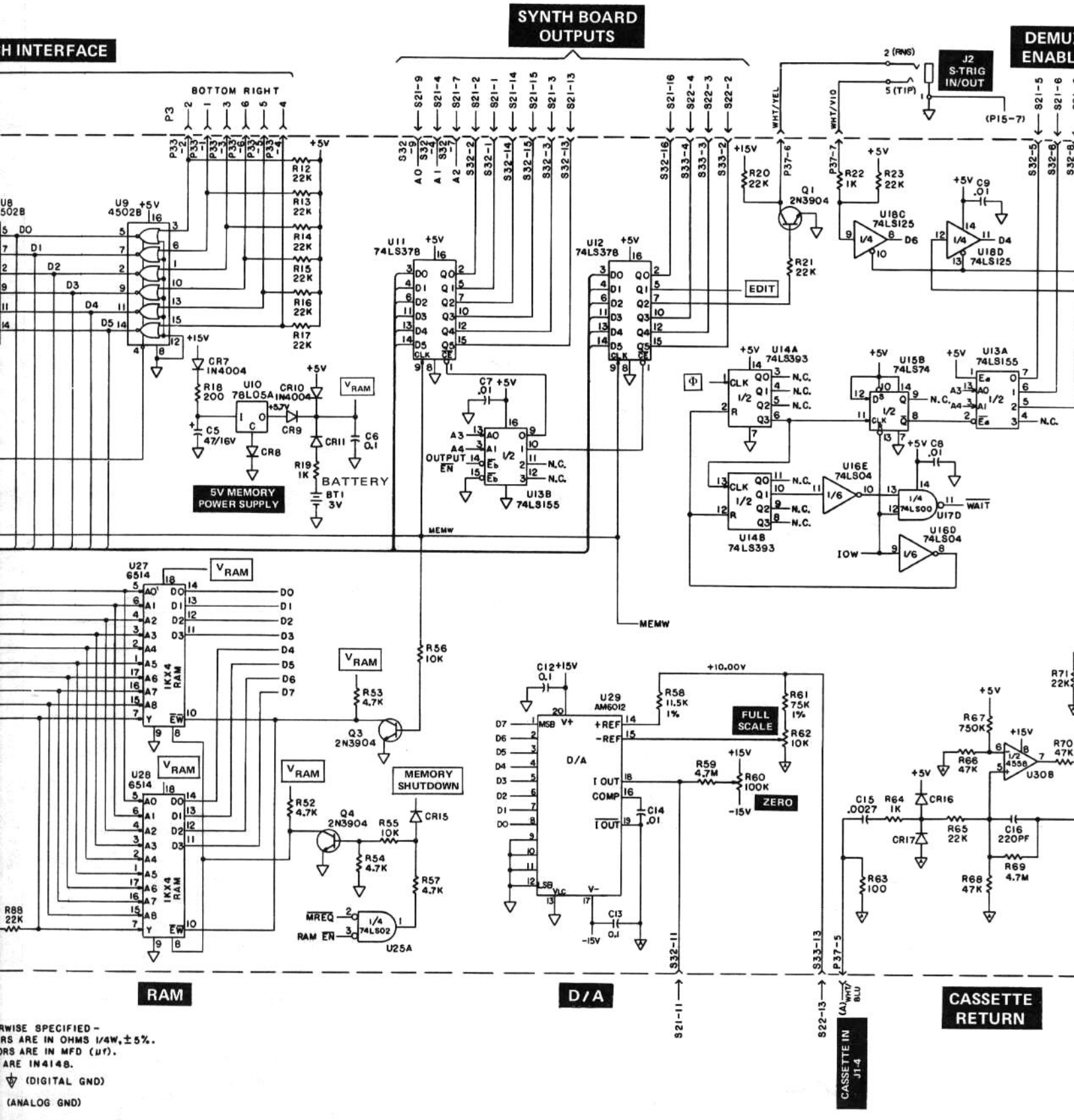
H INTERFACE
SYNTH BOARD OUTPUTS
DEMU ENABL
BOTTOM RIGHT
J2 S-TRIG IN/OUT
5V MEMORY POWER SUPPLY
BATTERY
EDIT
MEMW
WAIT
IOW
FULL SCALE
ZERO
MEMORY SHUTDOWN
RAM
D/A
CASSETTE RETURN
CASSETTE IN J14
RWISE SPECIFIED -
RS ARE IN OHMS 1/4W, ±5%.
ORS ARE IN MFD (µf).
ARE IN4148.
(DIGITAL GND)
(ANALOG GND)
MAND NOT DIRECTLY
ATED BY CPU.

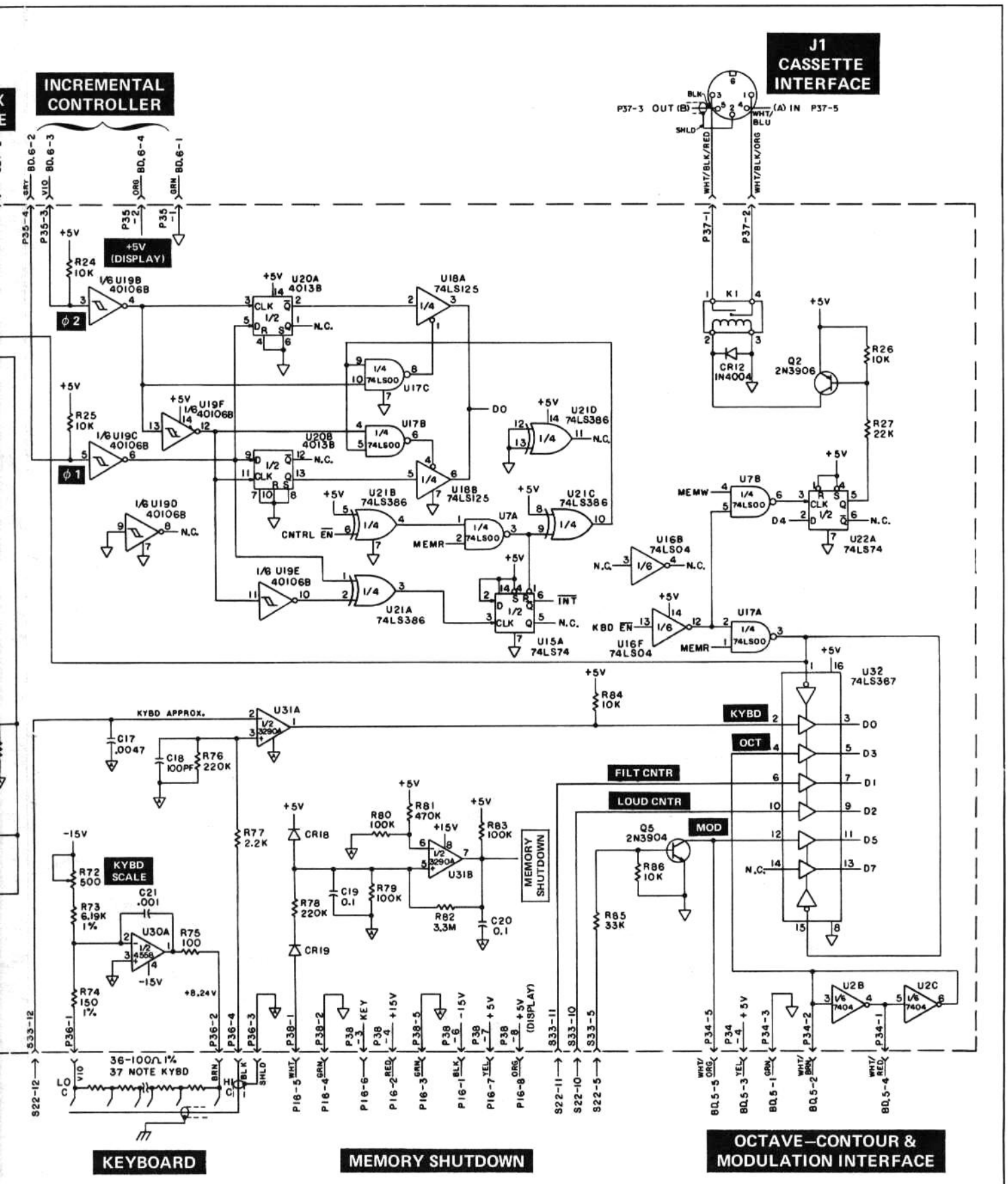


**BOARD 3**

*THE SOURCE DIGITAL BOARD SCHEMATIC*

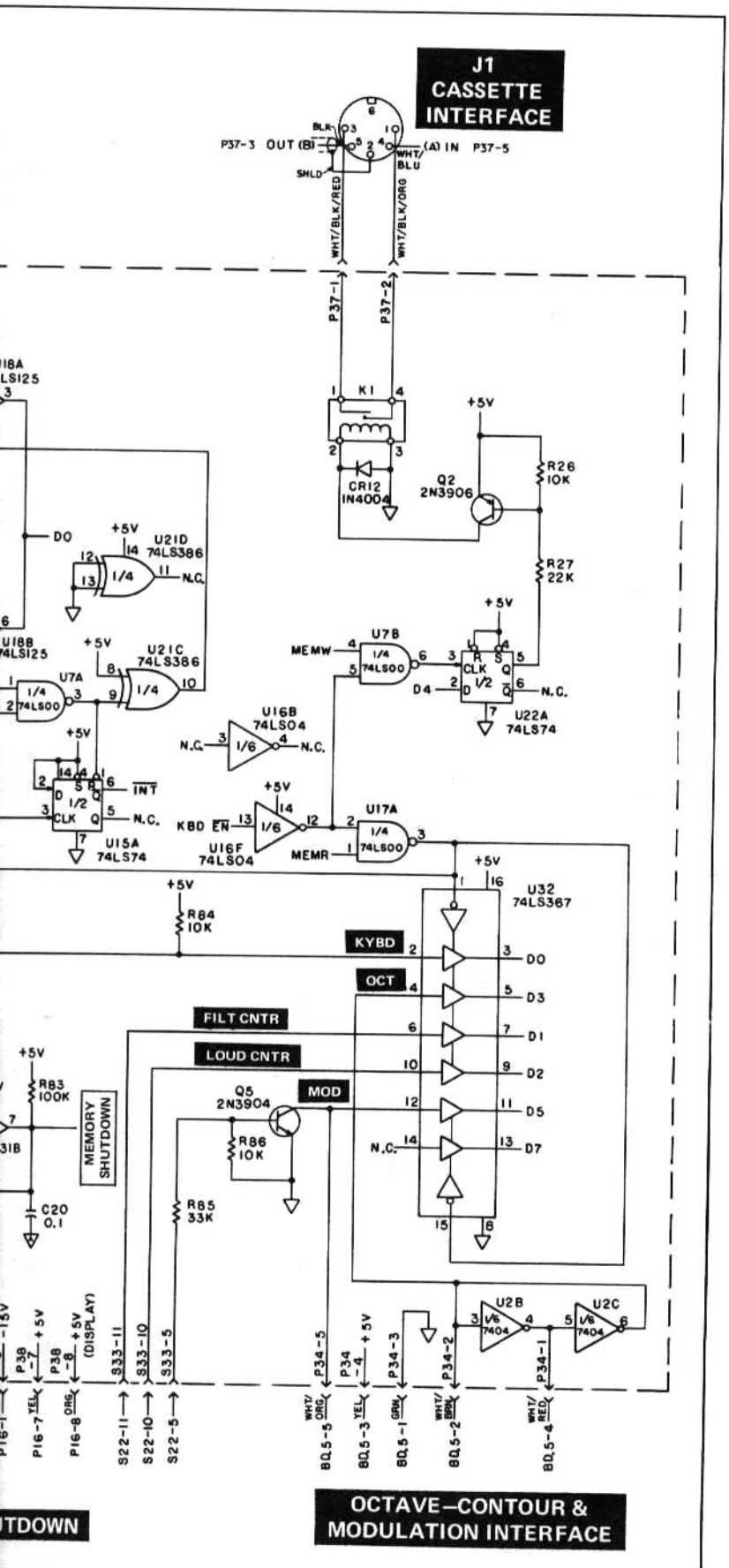


**BOARD 3**

*THE SOURCE DIGITAL BOARD SCHEMATIC*

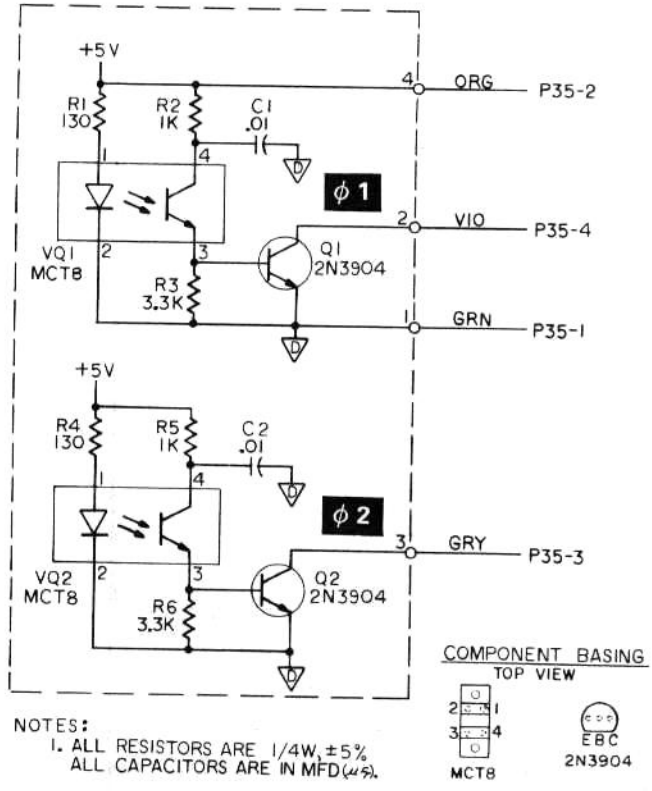


NOTES:
1. ALL RESISTORS ARE 1/4W, ±5%
ALL CAPACITORS ARE IN MFD(μF).

**BOARD 6**

*THE SOURCE OPTO INTERRUPTOR PRINTED CIRCUIT BOARD SCHEMATIC*

NOTE:
1. ALL RESISTORS 1/4W, ±5%

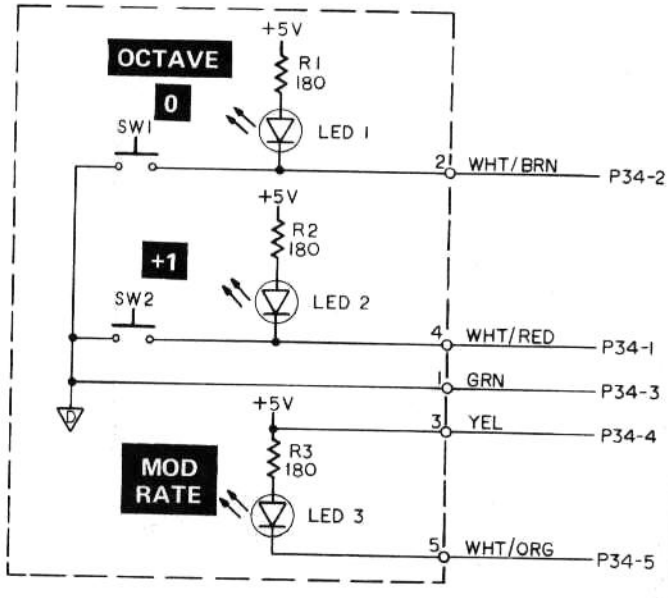


**BOARD 5**

*THE SOURCE OCTAVE TRANSPOSER PRINTED CIRCUIT BOARD SCHEMATIC*