SSW 06

- Use's Guide Soft Starter
- Guía del Usuario Arrancador Suave
- Manual do Usuário Chave de Partida Soft Starter

SOFT-STARTER MANUAL SSW-06

Serie: SSW-06

Software: version 1.3X

0899.5579 E/6

12/2006

ATTENTION!

It is very important to check if the Soft-Starter Software is the same as mentioned above.

The table below describes the revisions made to this manual.

Revision	Description	Section
1	First Edition	-
2	General Revision	-
3	General Revision	-
4	New Software Version	-
5	Implementation of the following current: 412A, 480A, 604A, 670A, 820A, 950A, 1100A and 1400A. New software version with: braking methods FWD/REV and Jog. P140 was changed. E73 was eliminated. E71 and E76 were changed.	Chap 3 and 10 3, 4, 6 and 8
6	General Revision	-

Quick Parameter Reference, Fault and Status Messages

I Parameters 09
II Fault Messages 17
III Other Messages 17

CHAPTER 1

Safety Notices

1.1 Safety Notices in the Manual 18
1.2 Safety Notice on the Product 18
1.3 Preliminary Recommendations 19

CHAPTER 2

General Information

2.1 About this Manual 20
2.2 Software Version 20
2.3 About the Soft-Starter SSW-06 20
2.4 Soft-Starter SSW-06 Identification 23
2.5 Receiving and Storage 25

CHAPTER 3

Installation and Connection

3.1 Mechanical Installation 26
3.1.1 Environment Conditions 26
3.1.2 Dimensions of the Soft-Starter SSW-06 26
3.1.3 Mounting Specifications 27
3.1.3.1 Mounting inside a Panel 28
3.1.3.2 Mounting on a surface 30
3.2 Electrical Installation 31
3.2.1 Power Terminals 32
3.2.2 Location of the Power/ Grounding, Control Connections and Fan Voltage Selection 36
3.2.3 Recommended Power/Grounding Cables 38
3.2.4 AC Input Connection 39
3.2.4.1 Power Supply Capacity 40
3.2.4.2 Recommended Fuses 40
3.2.5 Output Connection 41
3.2.5.1 Standard Three-Wire Connection (P150=0=Inactive) 41
3.2.5.2 Inside Delta Motor Connection (P150=1=Active) 42
3.2.6 Grounding Connections 43
3.2.7 Fan Connection and Selection of Fan Voltage 44
3.2.8 Signal and Contro Connections 45
3.2.9 RS-232, X2 Serial Communication Connection 48

3.2.10 RS-485, XC8 Isolated Serial Communication Board Connection 48
3.2.11 XC6 Fieldbus Communication Board Connection 48
3.3 Recommended Set-Ups 48
3.3.1 Recommended Set-ups by Keypad (HMI) Command with Isolating Contactor. Notes in 3 .3. 50
3.3.2 Recommended Set-ups by Keypad (HMI) Command with Circuit-breaker. Notes in 3.3. 50
3.3.3 Recommended Set-ups with Command via Two-wire Digital Inputs. Notes in 3.3. 51
3.3.4 Recommended Set-ups with Command via Three-wire Digital Inputs. Notes in 3.3. 51
3.3.5 Recommended Set-ups with Command via Three-wire Digital Input and Inside Delta Motor Connection. Notes in 3.3 and 3.2.5.2. 52
3.3.6 Recommended Set-ups with Command via Three-wire Digital Input or Serial Communication. Notes in 3.3. 52
3.3.7 Recommended Set-ups with Command via Three-wire Digital Input or Fieldbus Communication. Notes in 3.3. 53
3.3.8 Recommended Setup with Command via Digital Inputs and direction of rotation 53
3.3.9 Recommended Setup with Command via Digital Inputs and Reverse Braking 54
3.3.10 Recommended Setup with Command via Digital Inputs and Optimal Braking 54
3.3.11 Recommended Setup with Command via Digital Inputs and DC-Braking 55
3.3.12 Recommended Setup with Command via Digital Inputs and External By-pass Contactor 55
3.3.13 Symbols 56
3.4 European Directives for Electromagnetic Compatibility Requirements for installation 57
3.4.1 Installation 57

CHAPTER 4
Keypad (HMI) Operation

4.1 Description of the Keypad (HMI-SSW-06) 59
4.2 Use of the Keypad (HMI) 61
4.2.1 Keypad Use for Soft-Starter SSW-06 Operation 61
4.2.2 HMI Display-Signaling indications 62
4.2.3 Parameter Viewing and Programming 63

CHAPTER 5
Start-up

5.1 Power-up Preparation 65
5.2 Initial Power-up 66
5.3 Start-up 73
5.3.1 Start-up Operation via Keypad (HMI) -

Type of Control: Voltage Ramp 74

CHAPTER 6

Detailed Parameter Description

6.1 Access and Read-Only Parameters - P000 to P099 77
6.2 Regulation Parameters - P100 to P199 82
6.3 Configuration Parameters - P200 to P299 91
6.4 Communication Parameters - P300 to P399 104
6.5 Motor Parameters - P400 to P499 106
6.6 Special Function Parameters - P500 to P599 107
6.7 Protection Parameters - P600 to P699 113

CHAPTER 7

Applications and Programming

7.1 Applications and Programming 121
7.1.1 Starting by Voltage Ramp (P202=0) 123
7.1.2 Starting by Current Limit (P202=1) 124
7.1.3 Starting by Current Ramp (P202=4) 125
7.1.4 Starting by Current Ramp (P202=4) 126
7.1.5 Starting with Pump Control (P202=2) 127
7.1.6 Starting with Torque Control (P202=3) 129
7.1.6.1 Loads with constant torque (P202=3 and P120=1 point) 130
7.1.6.2 Loads with high initial torque (P202=3 and P120=3 points) 130
7.1.6.3 Loads with constant torque and S speed curve (P202=3 and P120=3 points) 131
7.1.6.4 Loads with quadratic torque and S speed curve (P202=3 and P120=2 points) 131
7.1.6.5 Loads with quadratic torque and linear speed curve (P202=3 and P120=3 points) 132
7.1.6.6 Loads with quadratic torque and higher initial torque (P202=3 and P120=3 points) 132
7.1.6.7 Hydraulic pump load type (P202=3) 133
7.2 Protections and Programming 136
7.2.1 Thermal Classes 136
7.2.1.1 Suggestions about thermal class setting 136
7.2.1.2 Example of how to program the Thermal Class 137
7.2.1.3 Time reduction when changing from cold starting to hot starting 138
7.2.1.4 Service Factor 138

CHAPTER 8

Diagnosis and Troubleshooting

8.1 Faults and Possible Causes 139
8.2 Troubleshooting 143

8.3 Contacting WEG Telephone/Fax/E-mail for Contact (Servicing) 143
8.4 Preventive Maintenance 144
8.4.1 Cleaning Instructions 145
8.5 Spare Parts List 145

CHAPTER 9

Options and Accessories

9.1 Remote Keypad (HMI) and Cables 146
9.2 RS-485 for the Soft-Starter SSW-06 148
9.2.1 RS-485 Communication Kit for the SSW-06 148
9.2.2 Optional MIW-02 Module 149
9.3 Fieldbus Communication Kits 149
9.3.1 Fieldbus DeviceNet Communication Kit for the SSW-06 149
9.3.2 Fieldbus Profibus DP Communication kit for the SSW-06 150

CHAPTER 10

Technical Specifications

10.1 Currents and Ratings According to Ul508 151
10.2 Currents and Ratings for IP55, IV Pole Weg Motor 152
10.3 Power Data 153
10.4 Electronics/Programming Data 153
10.5 Mechanical Data 155

QUICK PARAMETER REFERENCE, FAULT AND STATUS MESSAGES

Software: V1.3X
Application:
Model:
Serial Number:
Person Responsible:
Date: / / .

I. Parameters

Parameter	Description	Adjustable Range	Factory Setting	Unit	User´s Setting	Page
P000	Access Parameter	0 to 999	0	-		77
	READ ONLY PARAMETERS P001 to P099					
P001	Soft-Starter Current (%In of the Soft-Starter)	0 to 999.9	-	%		78
P002	Motor Current (%In of the Motor)	0 to 999.9	-	%		78
P003	Motor Current	0 to 9999.9	-	A		78
P004	Power Supply Voltage	0 to 999	-	V		78
P005	Network Frequency	0 to 99.9	-	Hz		78
P006	Soft-Starter Status	0=rdy - ready 1=Sub - Sub 2=Exx - Error 3=ruP - Run Up 4=FuLL - Full Volt. 5=PASS - By-pass 6=ECO - Reserved 7=rdo - Run Down 8=br - Braking 9=rE - FWD/REV 10=JOG - JOG 11=dly - Delay P630 12=G.di - Gen. Disable	-	-		78
P007	Output Voltage	0 to 999	-	V		79
P008	Power Factor	0 to 1.00	-	-		79
P009	Motor Torque (% Tn of the Motor)	0 to 999.9	-	%		79
P010	Output Power	0 to 6553.5	-	kW		79
P011	Apparent Output Power	0 to 6553.5	-	kVA		79
P012	Digital Input Status DI1 to DI6	0 = Inactive 1 = Active	-	-		80
P013	Status RL1, RL2 and RL3	0 = Inactive 1 = Active	-	-		80
P014	Last Fault	03 to 77	-	-		81
P015	Second Previous Fault	03 to 77	-	-		81
P016	Third Previous Fault	03 to 77	-	-		81
P017	Fourth Previous Fault	03 to 77	-	-		81
P023	Software Version	X.XX	-	-		81
P030	Current of Phase R	0 to 9999.9	-	A		81
P031	Current of Phase S	0 to 9999.9	-	A		81
P032	Current of Phase T	0 to 9999.9	-	A		81
P033	R-S Line Voltage	0 to 999	-	V		81
P034	S-T Line Voltage	0 to 999	-	V		81
P035	T-R Line Voltage	0 to 999	-	V		81

Parameter	Description	Adjustable Range	Factory Setting	Unit	User´s Setting	Page
P042	Time Powered	0 to 65530	-	h		81
P043	Time Enabled	0 to 6553	-	h		82
P050	Motor Thermal Protection Status	0 to 250	-	%		82
P085	Fieldbus Communication Board Status	0=Off 1=Board Inactive 2=Board Active and Offline 3=Board Active and Online	-	-		82
	REGULATION PARAMETERS P100 TO P199					
	Voltage Ramp					
P101	Initial Voltage (% Un of the motor)	25 to 90	30	%		82
P102	Acceleration Ramp Time	1 to 999	20	s		83
P103	Deceleration Voltage Step (% Un of the motor)	100=Inactive 99 to 60	100=Inactive	%		84
P104	Deceleration Ramp Time	0=Inactive 1 to 299	0=Inactive	s		84
P105	End Deceleration Voltage (% Un of the Motor)	30 to 55	30	%		84
	Current Limit					
P110	Current Limit (%In of the Motor current)	150 to 500	300	%		84
P111	Initial Current for the Current Ramp (% In of the Motor)	150 to 500	150	%		85
P112	Time for the Current Ramp (% of P102)	1 to 99	20	%		85
	Torque Control					
P120 (1)	Starting Torque Characteristics	1=Constant 2=Linear 3=Quadratic	1=Constant	-		86
P121	Initial Starting Torque (% Tn of Motor)	10 to 400	30	%		87
P122	End Starting Torque (% Tn of Motor)	10 to 400	110	%		87
P123	Minimum Starting Torque (% Tn of the Motor)	10 to 400	27	%		87
P124	Time for the Minimum Start Torque (% of P102)	1 to 99	20	%		87
P125 (1)	Stopping Torque Characteristics	1=Constant 2=Linear 3=Quadratic	1=Constant	-		88
P126	End Stop Torque (% Tn of the Motor)	10 to 100	20	%		88
P127	Minimum Stop Torque (% Tn of the Motor)	10 to 100	50	%		89
P128	Time for the Minimum Stop Torque (% of P104)	1 to 99	50	%		89
	Pump Control					
P130 (1)	Pump Control	0= Pump I 1= Pump II	0= Pump I	-		89
	By-pass					
P140 (1)	External By-pass Contactor	0=Inactive 1=Active	0=Inactive	-		89

Parameter	Description	Adjustable Range	Factory Setting	Unit	User´s Setting	Page
	Inside Delta					
P150 (1) (2)	Inside Delta Motor Connection	0=Inactive 1=Active	0=Inactive	-		90
	CONFIGURATION PARAMETERS P200 to P399					
P200	Password	0=Inactive 1=Active	1=Active	-		91
P201 (2)	Language Selection	0=Portuguese 1=English 2=Spanish 3=German	To be defined by the user	-		91
P202 (1)	Type of the Control	0=Voltage Ramp 1=Current limiting 2=Pump Control 3=Torque Control 4=Current Ramp	0=Voltage Ramp	-		91
P204 (1)	Load/Save Parameters	0=Not use 1=Not use 2=Not use 3=Reset P043 4=Not use 5=Loads Factory Default 6=Not use 7=Loads User Default 1 8=Loads User Default 2 9=Not use 10=Saves User Default 1 11=Saves User Default 2	0=Not use	-		94
P205	Display Default Selection	0=P001 1=P002 2=P003 3=P004 4=P005 5=P006 6=P007 7=P008	2=P003	-		95
P206	Auto-Reset Time	0=Inactive 1 to 600	0=Inactive	s		95
P215(1)	Keypad Copy Function	0=Inactive 1=SSW → HMI 2=HMI → SSW	0=Inactive	-		96
P218	LCD Display Contrast Adjust.	0 to 150	127	-		97
	Local/Remote Definition					
P220 (1)	Local/Remote Source Selection	0=Always Local 1=Always Remote 2=HMI(L) 3=HMI(R) 4=DI4 to DI6 5=Serial(L) 6=Serial(R) 7=Fieldbus(L) 8=Fieldbus(R)	2=HMI(L)	-		97

Parameter	Description	Adjustable Range	Factory Setting	Unit	User´s Setting	Page
P229 (1)	Local StatusCommand Selection	0=Keys HMI 1= Digital Inputs DIx 2=Serial 3=Fieldbus	0=Keys HMI	-		97
P230 (1)	Remote StatusCommand Selection	0=Keys HMI 1= Digital Inputs DIx 2=Serial 3=Fieldbus	1=DIx Terminals	-		97
P231 (1)	FWD/REV Selection	0=Not used 1=By Contactor 2=JOG Only	0=Not used	-		98
	Analog Outputs					
P251	AO1 (0 to 10)V Output Function	0=Not used 1= Current (%In of the SSW) 2=Input Voltage (%Un of the SSW) 3=Output voltage (%Un of the SSW) 4=Power Factor 5=Thermal Protection 6=Power (in W) 7=Power (in VA) 8=Torque (%Tn of Motor) 9=Fieldbus 10=Serial	0=Not used	-		99
P252	AO1 Analog Output Gain	0.000 to 9.999	1.000	-		99
P253	AO2 (0 to 20)mA or (4 to 20)mA Output Function	0=Not used 1= Current (%In of the SSW) 2=Input Voltage (%Un of the SSW) 3=Output voltage (%Un of the SSW) 4=Power Factor 5=Thermal Protection 6=Power (in W) 7=Power (in VA) 8=Torque (%Tn of the Motor) 9=Fieldbus 10=Serial	0= Not used	-		99
P254	AO2 Analog Output Gain	0.000 to 9.999	1.000	-		99
P255	AO2 Analog Output Selection	0=0 to 20 1=4 to 20	0=0 to 20	mA		99
	Digital Inputs					
P264 (1)	DI2 Digital Input Function	0=Not Used 1=Stop (Three-Wire) 2=Reset	2= Reset	-		100
P265 (1)	DI3 Digital Input Function	0=Not Used 1=General Enable 2=Reset	0=Not used	-		100

Parameter	Description	Adjustable Range	Factory Setting	Unit	User´s Setting	Page
P266 (1)	DI4 Digital Input Function	0=Not Used 1=FWD/REV 2=Local/Remote 3=No External Fault 4=JOG 5=Brake Off 6=Reset	0=Not Used	-		100
P267 (1)	DI5 Digital Input Function	0=Not Used 1=FWD/REV 2=Local/Remote 3=No External Fault 4=JOG 5=Brake Off 6=Reset	0=Not used	-		101
P268 (1)	DI6 Digital Input Function	0=Not used 1=FWD/REV 2=Local/Remote 3=No external Fault 4=JOG 5=Brake Off 6=Reset 7=Motor Thermistor	0=Not used	-		101
	Digital Outputs					
P277 (1)	RL1 Relay Function	0=Not used 1=Running 2=Full voltage 3=External By-pass 4=FWD/REV-K1 5=DC-Brake 6= No Fault 7=Fault 8=Fieldbus 9=Serial	1=Running	-		102
P278 (1)	RL2 Relay Function	0=Not used 1=Running 2=Full voltage 3=External By-pass 4=FWD/REV-K2 5=DC-Brake 6= No Fault 7=Fault 8=Fieldbus 9=Serial	2=Full Voltage	-		102
P279 (1)	RL3 Relay Function	0=Inactive 1=Running 2=Full voltage 3=External By-pass 4= Not used 5=DC-Brake 6= No Fault	6= No Fault	-		102

Parameter	Description	Adjustable Range	Factory Setting	Unit	User´s Setting	Page
		7=Fault 8=Fieldbus 9=Serial				
	Soft-Starter Data					
P295 (1)(2)	SSW Rated Current	0=10A 1=16A 2=23A 3=30A 4=45A 5=60A 6=85A 7=130A 8=170A 9=205A 10=255A 11=312A 12=365A 13=412A 14=480A 15=604A 16=670A 17=820A 18=954A 19=1100A 20=1411A	According to Soft-Starter Rated Current	A		103
P296 (1) (2)	Rated Voltage	0=220/575V 1=575/690V	According to Soft-Starter Voltage	V		103
	PARÂMETROS DE COMUNICAÇÃO SERIAL P300 a P399					
P308 (1)(2)	Soft-Starter Address on the Serial Communication Network	1 to 247	1	-		104
P309 (1)(2)	Fieldbus Communication Board Enabling	0=Inactive 1=Profibus-DP (1 Inputs and 1 Outputs) 2=Profibus-DP (4 Inputs and 4 Outputs) 3=Profibus-DP (7 Inputs and 7 Outputs) 4=DeviceNet (1 Inputs and 1 Outputs) 5=DeviceNet (4 Inputs and 4 Outputs) 6=DeviceNet (7 Inputs and 7 Outputs)	0=Inactive	-		104
P312 (1)(2)	Protocol Type and Serial Communication Transfer Rate	1=Modbus-RTU (9600bps, no parity) 2=Modbus-RTU (9600bps, odd) 3=Modbus-RTU (9600bps, even) 4=Modbus-RTU (19200bps, no parity) 5=Modbus-RTU (19200bps, odd) 6=Modbus-RTU (19200bps, even) 7=Modbus-RTU (38400bps, no parity) 8=Modbus-RTU (38400bps, odd)	1=Modbus-RTU (9600bps, no parity)			104

Parameter	Description	Adjustable Range	Factory Setting	Unit	User´s Setting	Page
		9=Modbus-RTU (38400bps, even)				
P313	Serial and Fieldbus Communication Error Actions (E28, E29 and E30)	0=Inactive 1=Disable 2=General Enable 3=Changes to Local	0=Inactive			104
P314(1)	Timeout Time for Serial Communication Telegram Reception	0 to 999	0= Inactive	s		105
P315 (1)	Read Parameter via Fieldbus 1	0 to 999	0	-		105
P316 (1)	Read Parameter via Fieldbus 2	0 to 999	0	-		105
P317 (1)	Read Parameter via Fieldbus 3	0 to 999	0	-		105
	MOTOR PARAMETERS P400 to P499					
P400 (1)	Rated Motor Voltage	0 to 999	380	V		106
P401 (1)	Rated Motor Current	0.0 to 1500	20	A		106
P403 (1)	Rated Motor Speed	400 to 3600	1780	rpm		106
P404 (1)	Rated Motor Power	0.1 to 2650	75	kW		106
P405 (1)	Motor Power Factor	0 to 1.00	0.89	-		106
P406 (1)	Service Factor	0 to 1.50	1.00	-		106
	SPECIAL PARAMETERS P500 to P599					
	Braking					
P500 (1)	Braking Methods	0=Inactive 1=Reverse Braking 2=Optimal Braking 3=DC-Braking	0=Inactive	-		107
P501	Braking Time	1 to 299	10	s		110
P502	Braking Voltage Level	30 to 70	30	%		110
P503	Braking End Detection	0=Inactive 1=Automatic	0=Inactive	-		110
	JOG					
P510 (1)	Jog	0=Inactive 1=Active	0=Inactive	-		111
P511	Jog Level	10 to 100	30	%		111
	Kick Start					
P520 (1)	Kick Start Torque Pulse (according to P202)	0=Inactive 1=Active	0=Inactive	-		112
P521	Kick Start Pulse Time	0.1 to 2	0.1	s		112
P522	Kick Start Voltage Pulse Level (% Un of the Motor)	70 to 90	70	%		112
P523	Kick Start Current Pulse Level (% In of the Motor)	300 to 700	500	%		112
	PROTECTION PARAMETERS P600 to P699					
	Voltage Protection					
P600 (1)	Undervoltage (% Un of the motor)	0 to 30	20	%		113
P601 (1)	Immediate Undervoltage Time	0=Inactive 1 to 99	1	s		113
P602 (1)	Overvoltage (% Un of the motor)	0 to 20	15	%		113
P603 (1)	Immediate Overvoltage Time	0=Inactive 1 to 99	1	s		113
P604 (1)	Voltage Imbalance Between Phases (% Un of the motor)	0 to 30	15	%		114

Parameter	Description	Adjustable Range	Factory Setting	Unit	User´s Setting	Page
P605 (1)	Phase Voltage Imbalance Time	0=Inactive 1 to 99	1	s		114
	Current Protection					
P610 (1)	Immediate Undercurrent (% In of the motor)	0 to 99	20	%		114
P611 (1)	Immediate Undercurrent Time	0=Inactive 1 to 99	0=Inactive	s		114
P612 (1)	Immediate Overcurrent (% In of the motor)	0 to 99	20	%		114
P613 (1)	Immediate Overcurrent Time	0=Inactive 1 to 99	0=Inactive	s		114
P614 (1)	Current Imbalance between Phases (% In of the motor)	0 to 30	15	%		115
P615 (1)	Current Imbalance Between Phase Times	0=Inactive 1 to 99	1	s		115
P616 (1)	Undercurrent before Closing of Internal By-pass	0=Inactive 1=Active	1=Active	-		115
P617	Motor Overcurrent before By-pass	0=Inactive 1=Active	1=Active	-		115
	Phase Sequence					
P620 (1)	RST Phase Current Sequence	0=Inactive 1=Active	0=Inactive	-		115
	Interval between Starts					
P630	Interval of Time after Stop	2 to 999	2	s		115
	Motor Thermal Protection					
P640 (1)	Motor Protection Thermal Class of Motor Protection	0=Inactive 1=5 2=10 3=15 4=20 5=25 6=30 7=35 8=40 9=45	6=30	-		117
P641 (1)	Auto-Reset of thermal Memory	0=Inactive 1 to 600	0=Inactive	s		120

Notes presented on quick parameter description:
(1) This parameter can only be changed with the motor stopped.
(2) This parameter does not change when factory defaults are loaded (P204=5).

II. Fault Messages

Display	Description	Page
E03	Undervoltage, Phase Fault or Phase Unbalancing	139
E04	Overtemperature at the Power Assembly	139
E05	Motor Overload	139
E06	External Fault (DI)	139
E10	Copy Function Fault	139
E15	Motor is not Connected or SCRs in Short-circuit	139
E16	Overvoltage	139
E24	Programming Error	140
E28	Timeout in the Telegram Reception	140
E29	Fieldbus Communication is Inactive	140
E30	Fieldbus Board is Inactive	140
E31	HMI Connection Fault	140
E32	Motor Overtemperature (DI)	140
E41	Self-Diagnosis Fault	140
E62	Start Limiting Time	140
E63	Locked Rotor	140
E65	Undercurrent	141
E66	Overcurrent	141
E67	Inverted Phase Sequence	141
E70	Undervoltage at the Electronics	141
E71	Bypass Contact is Open	141
E72	Overcurrent before By-pass Contact	141
E74	Current Imbalance	141
E75	Frequency of Supply Line out of Permitted Range	141
E76	Undercurrent before By-pass	141
E77	Bypass Contact is closed or SCRs in Short-circuit	141

For more details see table 8.1 in chapter 8.

III. Other Messages

Display	Description
rdy	Soft-Starter is ready to be enabled
ruP	Soft-Starter is enabled according to “ramp up”
FuLL	Soft-Starter is enabled at “full voltage”
PASS	Soft-Starter is enabled with “By-pass”
rdo	Soft-Starter is enabled according to “ramp down”
br	Soft-Starter is enabled according to “braking”
rE	Soft-Starter is enabled according to “reversing”
JOG	Soft-Starter is enabled according to “jog”
Sub	Soft-Starter under voltage fault
Exx	Soft-Starter fault
dly	Soft-Starter esperando o tempo após parada "delay"
G.di	Soft-Starter com desabilita geral "general disable"
ECO	Reserved

SAFETY NOTICES

This Manual contains all necessary information for the correct installation and operation of the SSW-06 Soft-Starter.
The SSW-06 Instruction Manual has been written for qualified personnel with suitable training or technical qualifications to operate this type of equipment.

1.1 SAFETY NOTICES IN THE MANUAL

The following Safety Notices will be used in this Manual:

DANGER!
If the recommended Safety Instructions are not strictly observed, serious or fatal injuries of personnel and/or equipment damage can occur.

ATTENTION!
Failure to observe the recommended Safety Procedures can lead to material damage.

NOTE!
The content of this Manual supplies important information for the correct understanding of operation and proper performance of the equipment.

1.2 SAFETY NOTICES ON THE PRODUCT

The following symbols may be attached to the product, serving as Safety Notices:

High Voltages

Components are sensitive to electrostatic discharge. Do not touch them without following proper grounding procedures.

Mandatory connection to ground protection (PE)

Shield connection to ground

1.3 PRELIMINARY RECOMMENDATIONS

DANGER!
Only qualified personnel should plan or implement the installation, start-up, operation and maintenance of this equipment. Personnel must review this entire Manual before attempting to install, operate or troubleshoot the SSW-06.
These personnel must follow all safety instructions included in this Manual and/or defined by local regulations.
Failure to comply with these instructions may result in personnel injury and/or equipment damage.

NOTE!
In this Manual, qualified personnel are defined as people that are trained to:

1. Install, ground, power-up and operate the SSW-06 according to this Manual and the local required safety procedures;
2. Use of safety equipment according to the local regulations;
3. Administer First Aid Treatment.

DANGER!
Always disconnect the main power supply before touching any electrical component associated to the SSW-06 Soft-Starter.
High voltages and spinning parts (fans) may be present even after switching off the power supply. Wait at least 3 minutes for the complete discharge of the capacitors.
Always connect the equipment frame to the protection earth (PE) in the appropriate place for this.

ATTENTION!
All electronic boards have components that are sensitive to electrostatic discharges. Never touch any of the electrical components or connectors without following proper grounding procedures. If necessary to do so, touch the properly grounded metallic frame or use a suitable ground strap.

Do not apply high voltage (High Pot) test on Soft-Starter SSW-06!
If this test is necessary, contact the manufacturer

NOTE!
Soft-Starter SSW-06 can interfere with other electronic equipment. In order to reduce this interference, adopt the measures recommended in Section 3 “Installation”.

NOTE!
Read this entire manual carefully and completely before installing or operating the Soft-Starter SSW-06.

GENERAL INFORMATION

This chapter defines the contents and purpose of this manual and describes the main characteristics of the SSW-06 Soft-Starter. Identification of the SSW-06, receiving and storage requirements are also provided.

2.1 ABOUT THIS MANUAL

This Manual is divided into 10 Chapters, providing information to the user on how to receive, install, start-up and operate the Soft-Starter SSW-06.

Chapter 1 - Safety Notices;
Chapter 2 - General Information; Receiving and Storing of the SSW-06;
Chapter 3 - Information about Installation and Connection of the Soft-Starter SSW-06 power and control circuit), how to install options and recommended drives;
Chapter 4 - Using the Keypad (Human Machine Interface - HMI);
Chapter 5 - Information about running and steps to be followed;
Chapter 6 - Detailed description of all Soft-Starter SSW-06 programming parameters;
Chapter 7- Information and suggestions on how to program the types of control and protections
Chapter 8 - Information about Diagnostics and Troubleshooting, cleaning instructions and preventive maintenance;
Chapter 9 - SW-06 Soft-Starter optional devices;
Chapter 10 - Tables and technical information about the power lines of the Soft-Starter SSW-06;

This Manual provides information for the correct use of the Soft-Starter SSW-06. Due to the various functions of the Soft-Starter SSW-06 many different modes of operation are possible.
As the Soft-Starter SSW-06 can be applied in several ways, it is impossible to describe here all application possibilities, neither can WEG assume any responsibility when the Soft-Starter SSW-06 is not used according to this Manual.
No part of this Manual may be reproduced in any form, without written permission from WEG.

2.2 SOFTWARE VERSION

It is important to note the Software Version installed in the Soft-Starter SSW-06, since it defines the functions and the programming parameters of the Soft-Starter. This Manual refers to the Software version indicated on the inside cover. For example, the Version 1.0X applies to versions 1.00 to 1.09, where “X” is a variable that will change due to minor software revisions.
The Software Version can be read the Parameter P023.

2.3 ABOUT THE SOFT- STARTER SSW-06

The Soft-Starter SSW-06 is a high performance Drive that permits the start Control of three-phase AC induction motors. The Soft-Starter SSW-06 prevents mechanical shocks on the load and current peaks in the supply line.
Among the main characteristics of this product is its line and connection fault detection capacity thus enabling the customer to chose the best way of protecting his the motor, such as:

- ☑ Programmable protections against line undervoltage and overvoltage, and line phase imbalance;
- ☑ Thermal class may be programmed up to Class 45 for large motors. The thermal memory is saved on EEPROM even in case of an electronic supply fault.

Special functions such as:

- ☑ Display of the number of hours, running time, supply voltage phase, motor current per phase, motor current in amperes, motor current as a % of the Soft-Starter SSW-06 rated current and the rated current as a % of the motor current, status of the digital inputs and outputs;
- ☑ Setting sequence after reset to factory default;
- ☑ Very flexible selection of start/stop control type, enabling the following selections: Voltage Ramp, Constant Current Limiting or by Ramp, Pump Control and Constant, Linear or Quadratic Torque Control;
- ☑ Totally flexible Torque Control providing very high performance for the most demanding applications;
- ☑ Possibility of using all digital inputs, digital outputs and analog outputs as remote PLC via Fieldbus communication;
- ☑ Possibility of monitoring the power supply voltage measurements in a PLC network via Fieldbus communication.

Control Hardware:

- ☑ Keypad, referred to as the Human Machine Interface (HMI) with Liquid-Crystal Display and easy programming. Fault conditions can be displayed in several languages.
- ☑ 32Bit Microprocessor calculates the True rms voltage and current;
- ☑ Measurement of the voltage and current in the three phases;
- ☑ Isolated digital input for the motor PTC;
- ☑ Fieldbus boards and RS-485 as options.

Power Hardware:

- ☑ Compact size;
- ☑ Power Supply input and output connections:
  Models 85A to 820A - Input through the top and output through the bottom of the SSW-06.Models 950A to 1400A - Input and output through the bottom.
- ☑ Easy assembly and maintenance services;
- ☑ Measurements of heat sink temperature in models 255A to 820A through two thermostats:One thermostat to switch-on the internal fans and the other to monitor over-heating.
- ☑ Soft-Starter SSW-06 can be coupled to the motor by a standard connection or an inside delta motor connection without requiring optional devices.

Incorporated By-pass contactor makes the Soft-Starter SSW- 06 (85A to 820A):

- ☑ More resistant to supply line oscillations after starting;
- ☑ Save energy that would be dissipated through the thyristors after the start, thus reducing the number of fans required for control panel cooling.

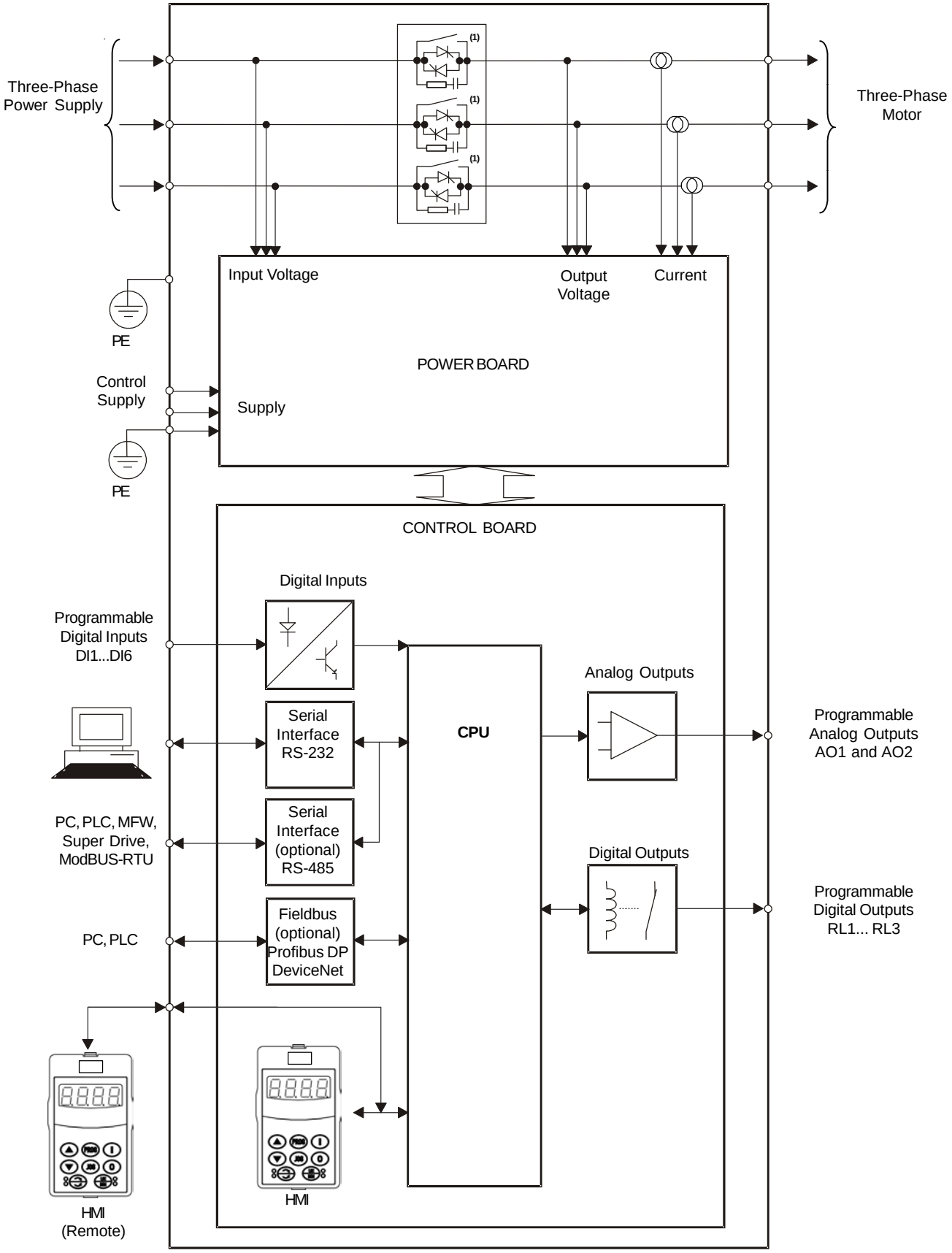

(1) Models 950, 1100 and 1400 do not have an internal By-pass contactor.

Figure 2.1 - *Soft-Starter SSW-06 block diagram*

2.4 SOFT-STARTER SSW-06 IDENTIFICATION

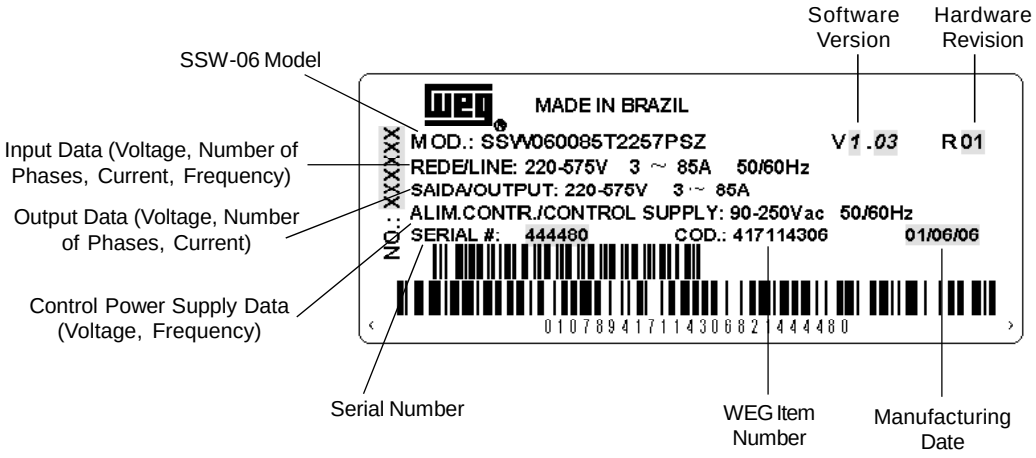

Figure 2.2 *- Soft-Starter SSW-06 nameplate*

Location of Soft-Starter SSW-06 nameplate:

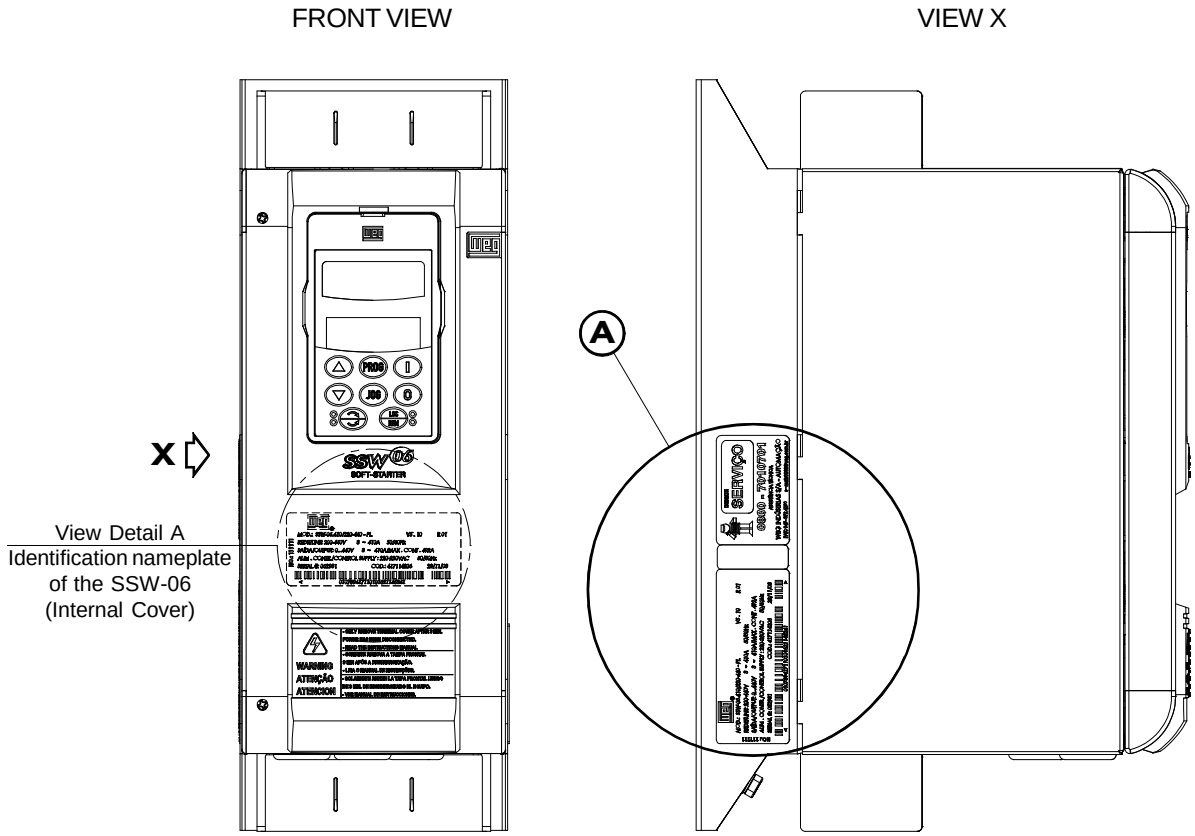

Figure 2.3 - *Detail of the Soft-Starter SSW-06 nameplate*

HOW TO SPECIFY THE SSW-06 MODEL:

SSW-06	*0023*	*T*	*2257*	*P*	*O*	*_ _*	*_ _*	*_ _*	*Z*
Soft-Starter SSW-06 WEG Series	Rated Output Current: 0085=85A 0130=130A 0170=170A 0205=205A 0255=255A 0312=312A 0365=365A 0412=412A 0480=480A 0604=604A 0670=670A 0820=820A 0950=950A 1100=1100A 1400=1400A	Thee-phase Power Supply	Power Supply Voltage: 2257 = (220 to 575)V	Manual Language: P= portuguese E=English S=Spanish G=German	Options: S=Standard O=with options	Human-Machine Interface (Keypad): Blank = standard SI= without keypad	Special Hardware: Blank = standard H1 = 115V Ventilation (Model 950A) H2 = 230V Ventilation (Models 950A, 1100A and 1400A)	Special Software: Blank = standard S1=Special Software	End of Code

NOTES!

The option field (S or O) defines if the Soft-Starter SSW-6 is a standard version or if it is equipped with any optional devices. If the standard version is required, the code ends here. The model number always has the letter Z at the end. For example:
SSW060085T2257ESZ = Standard Soft-Starter SSW-06 with current of 85A and 220V to 575V with Manual in English.

If there are accessories, the spaces must be filled out in the correct sequence until the code ends with the letter zero.

The standard product is defined as described here:
☑ Degree of protection:IP00 from 85A to 1400A
☑ Human-Machine-Interface: HMI-SSW06 (with LCD and LED displays).

Obs.: The communication kits are optional, see chapter 9.

2.5 RECEIVING AND STORAGE

The SSW-06 is supplied in packaging according to the model:
-Models 85A to 205A in a cardboard box;
-Models 255A to 365A in a cardboard box over a wooden box;
-Models 412A to 1400A in a wooden box.
The outside of the packing container has a nameplate that is identical to that on the Soft-Starter SSW-06. Please check if the nameplate data matches the ordered data.
The models up to 205A must be placed and opened on a table with the help of two or more people, open the box, remove the foam protection and remove Soft-Starter SSW-06.
The models up to 205A must be placed and opened on a table with the help of two or more persons.
Open the box, remove the foam protection and remove Soft-Starter SSW-06 with the help of two or more persons.
Models greater than 255A must be opened on the floor. Open the box and, remove the bolts that fasten the Soft-Starter SSW-06 on the pallet.
The Soft-Starter SSW-06 must be handled with a hoist.
Check if:

- ☑ The Soft-Starter SSW-06 nameplate data matches the purchase order;
- ☑ The equipment has not been damaged during transportation. If any problem is detected, contact the carrier immediately.
- ☑ If the Soft-Starter SSW-06 is not to be installed immediately, store it within its original cardboard box in a clean and dry room (Storage temperatures between - 10°C (14ºF) and 65°C (149ºF)).

INSTALLATION AND CONNECTION

This chapter describes the electric and mechanic installation procedures of the SSW-06 Soft-Starters. The orientations and suggestions must be followed for correct product functioning.

3.1 MECHANICAL INSTALLATION

3.1.1 Environment Conditions

The location of the Soft-Starter SSW-06 installation is an important factor to assure good performance and high product reliability.
For proper installation of the SSW-06 Soft-Starter, we make the following recommendations:

- ☑ Avoid direct exposure to sunlight, rain, excessive humidity or marine environment;
- ☑ Gases or explosive or corrosive liquids;
- ☑ Excessive vibration, dust or metallic and/or oil particles in the air.

Allowed Environment Conditions:

- ☑ Temperature: 0ºC to 55ºC (32ºF to 131ºF) – Rated conditions for models 85A to 820A;
  0ºC to 40ºC (32ºF to 104ºF) – Rated conditions for models 950A to 1400A.
  2% Current reduction for each degree Celsius above the specification in the rated conditions.
- ☑ Relative Air Humidity: 5% to 90%, non-condensing.
- ☑ Maximum Altitude:1000m (3,300 ft) - rated conditions.
  From 1000m to 4000m (3,300ft to 13,200ft) - with 1% current reduction for each 100m (330ft) above 1000m (3,300ft).
- ☑ Degree of Pollution: 2 (according to UL508).
  Water, condensation or conductive dust/particles are not allowed in the air.

3.1.2 Dimensions of the Soft-Starter SSW-06

External dimensions and mounting holes follow Figure 3.1 and Table 3.1.

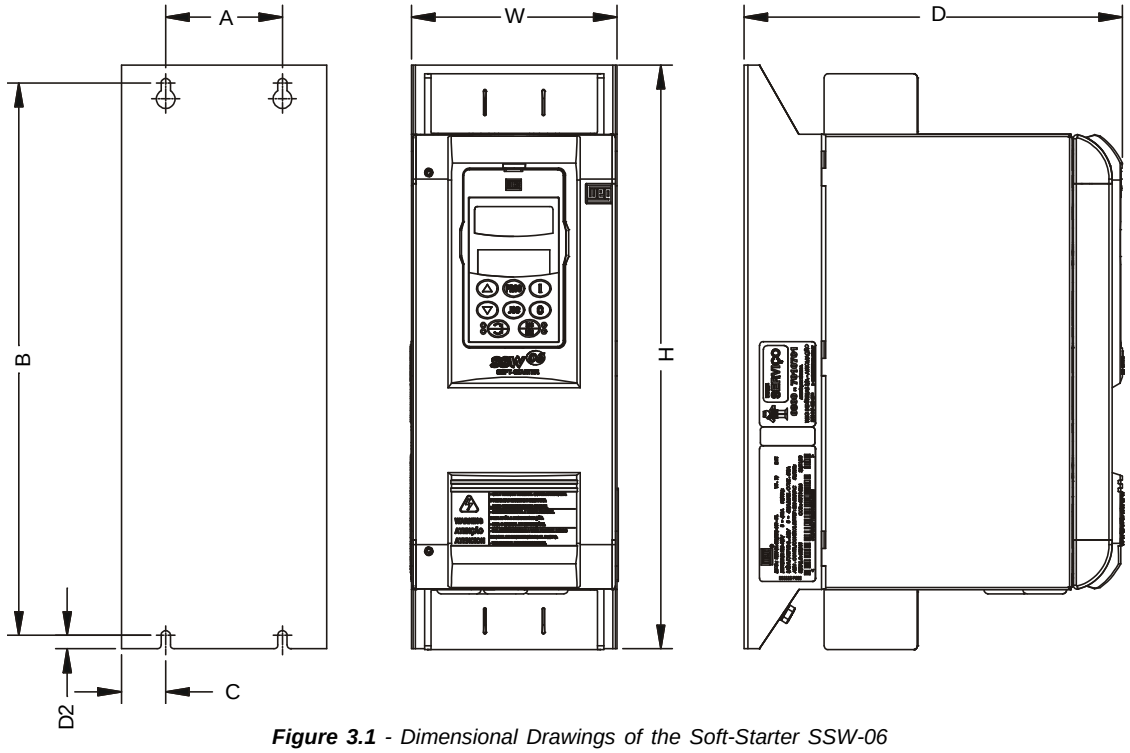

Figure 3.1 *- Dimensional Drawings of the Soft-Starter SSW-06*

Model	Height H mm (in)	Width W mm (in)	Depth. D mm (in)	A mm (in)	B mm (in)	C mm (in)	D2 mm (in)	Mounting screw mm (in)	Weight Kg (lb)	Degree of Protection
SSW-06.0085 SSW-06.0130	370 (14.57)	132 (5.20)	244 (9.61)	75 (2.95)	350 (13.78)	28.5 (1.12)	8.5 (0.33)	M5 (1/4")	8.5 (18.74)	IP00
SSW-06.0170 SSW-06.0205	440 (17.32)	223 (8.78)	278 (10.94)	150 (5.91)	425 (16.73)	36.5 (1.44)	5.9 (0.23)	M6 (1/4")	18.5 (40.79)	
SSW-06.0255 SSW-06.0312 SSW-06.0365	550 (21.65)	370 (14.57)	311 (12.24)	200 (7.87)	527.5 (20.77)	84.8 (3.34)	10 (0.39)	M6 (1/4")	39.5 (87.08)	
SSW06.0412 SSW06.0480 SSW06.0604	650 (25.59)	369.5 (14.55)	347 (13.67)	200 (7.87)	627.5 (24.7)	84.75 (3.33)	11.25 (0.44)	M6 (1/4")	55.0 (121.27)	
SSW06.0670 SSW06.0820	795 (31.3)	540 (21.26)	357.12 (14.06)	250 (9.84)	775 (30.51)	145 (5.71)	10 (0.39)	M8 (5/16")	120.0 (264.60)	
SSW06.0950	894.5 (35.22)	568.2 (22.37)	345.15 (13.59)	400 (15.75)	810 (31.89)	84.1 (3.31)	10 (0.39)	M8 (5/16")	107.0 (235.93)	
SSW06.1100 SSW06.1400	1234.8 (48.61)	685 (26.97)	432.94 (17.04)	500 (19.68)	1110 (43.7)	92.5 (3.64)	15 (0.59)	M8 (5/16")	217.5 (479.59)	

Table 3.1 *- Installation Data with dimensions in mm (in)*

3.1.3 Positioning / Fixing

At least the spaces around the soft-starter must be left open for the installation of the SSW-06 Soft-Starter, according to Figure 3.2, as follows. The dimensions of each space are described in table 3.2.

Install the Soft-Starter SSW-06 in the vertical position according to the following recommendations:

1) Install the SSW-06 Soft-Starter on a flat surface;
2) Do not place heat sensitive components on top of the SSW-06 Soft-Starter;

ATTENTION!
If the Soft-Starters are installed one next to the other, use minimum distance B.
When a Soft-Starter is installed on top of another, use minimum distance A+C and avoid to the Soft-Starter above the hot air that comes from the Soft-Starter below.

ATTENTION!
Foresee independent conduits or electroducts for physically separating the signal, control and power conductors (see item 3.2, electrical installation).

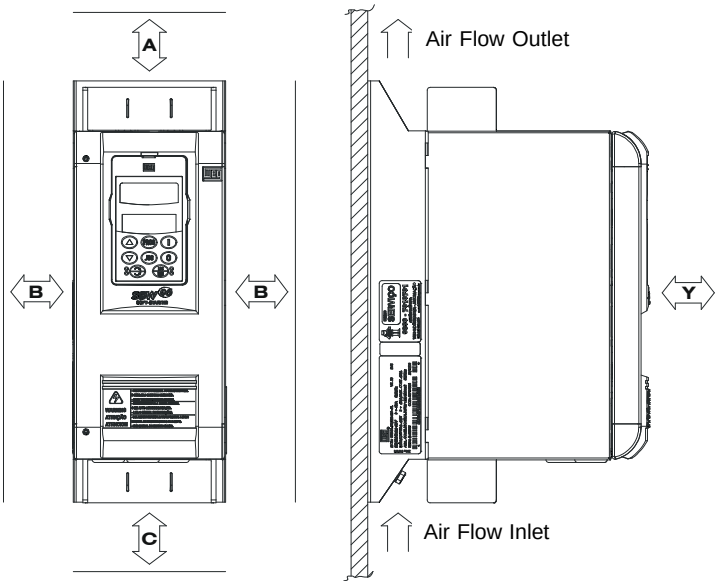

Figure 3.2 - *Free spaces for cooling*

Model	A mm (in)	B mm (in)	C mm (in)	Y mm (in)
SSW-06.0085 SSW-06.0130	150 (5.90)	30 (1.18)	150 (5.90)	50 (1.96)
SSW-06.0170 SSW-06.0205	150 (5.90)	30 (1.18)	150 (5.90)	50 (1.96)
SSW-06.0255 SSW-06.0312 SSW-06.0365	150 (5.90)	30 (1.18)	150 (5.90)	50 (1.96)
SSW-06.0412 SSW-06.0480 SSW-06.0604	150 (5.90)	30 (1.18)	150 (5.90)	50 (1.96)
SSW-06.0670 SSW-06.0820	150 (5.90)	30 (1.18)	150 (5.90)	50 (1.96)
SSW-06.0950	150 (5.90)	30 (1.18)	150 (5.90)	50 (1.96)
SSW-06.1100 SSW-06.1400	150 (5.90)	100 (3.93)	150 (5.90)	50 (1.96)

Table 3.2 *- Recommended free spaces*

3.1.3.1 Mounting inside a Panel

When the Soft-Starter SSW-06 are installed in panels or closed metallic boxes, adequate cooling is required to ensure that the temperature around the inverter will not exceed the maximum allowed temperature. See Dissipated Power in the table 3.4.

Use the minimum recommended panel dimensions and its cooling requirements:

Model	Panel Dimensions			Cooling CFM (m^3/min)
	Width mm (in)	Hiegth mm (in)	Depth mm (in)	
SSW-06.0085 SSW-06.0130 SSW-06.0170 SSW-06.0205	600 (23.62)	1200 (47.24)	400 (15.75)	-
SSW-06.0255	600 (23.62)	1600 (63.00)	600 (23.62)	-
SSW-06.0312 SSW-06.0365	600 (23.62)	2000 (78.74)	600 (23.62)	-
SSW-06.0412 SSW-06.0480 SSW-06.0604	600 (23.62)	2000 (78.74)	600 (23.62)	-
SSW-06.0670 SSW-06.0820	800 (31.50)	2000 (78.74)	600 (23.62)	-
SSW-06.0950	800 (31.50)	2000 (78.74)	600 (23.62)	1757.30 (49.80)
SSW-06.1100	800	2000	600	1757.30 (49.80)
SSW-06.1400	(31.50)	(78.74)	(23.62)	2648.44 (75.00)

Table 3.3 *- Panel Dimensions and Cooling Requirements*

Model	Power Losses In the eletronics	Fan Power		Total Power losses in the SCRs in Full Voltage	Average power losses-10 starts/h 3xIn@30s	Total average power losses-10 starts/h 3xIn@30s
	W	W		W	W	W
SSW-06.0085	33	-		0 = By-pass	76.5	109.5
SSW-06.0130	33	-		0 = By-pass	117.0	150.0
SSW-06.0170	33	-		0 = By-pass	153.0	186.0
SSW-06.0205	33	-		0 = By-pass	184.5	217.5
SSW-06.0255	33	58	528mA@110Vac 264mA@220Vac	0 = By-pass	229.5	320.5
SSW-06.0312	33	58	528mA@110Vac 264mA@220Vac	0 = By-pass	280.8	371.8
SSW-06.0365	33	58	528mA@110Vac 264mA@220Vac	0 = By-pass	328.5	419.5
SSW-06.0412	33	58	528mA@110Vac 264mA@220Vac	0 = By-pass	370.8	461.8
SSW-06.0480	33	58	528mA@110Vac 264mA@220Vac	0 = By-pass	432.0	523.0
SSW-06.0604	33	58	528mA@110Vac 264mA@220Vac	0 = By-pass	543.6	634.6
SSW-06.0670	33	87	396mA@110Vac 972mA@220Vac	0 = By-pass	603.0	723.0
SSW-06.0820	33	87	396mA@110Vac 1391mA@220Vac	0 = By-pass	738.0	858.0
SSW-06.0950	33	160	727mA@110Vac 955mA@220Vac	3420	427.5	3898.0
SSW-06.1100	33	210	955mA@220Vac	3960	495.0	4533.0
SSW-06.1400	33	210	955mA@220Vac	5040	630.0	5703.0

Table 3.4 *- Power losses for panel fan dimensioning*

NOTE!

The fans above are recommended for duties of 10 starts/hour with 3 x In of the Soft-Starter during 30s.

The total power losses can be determined through the equation below:

$$\frac{(Pe \times tc) + (1.2V \times Ip \times 3 \times tp) + (1.2V \times In \times 3 \times tr)}{tc} = Ptd$$

where:
Pe = power losses at the electronics (W)
tc = working cycle time (s)
Ip = start current (A)
tp = start time (s)
In = current at rated duty (A), with By-pass In=0
tr = rated duty time (Full Voltage) (s)
Ptd = total power losses (W)

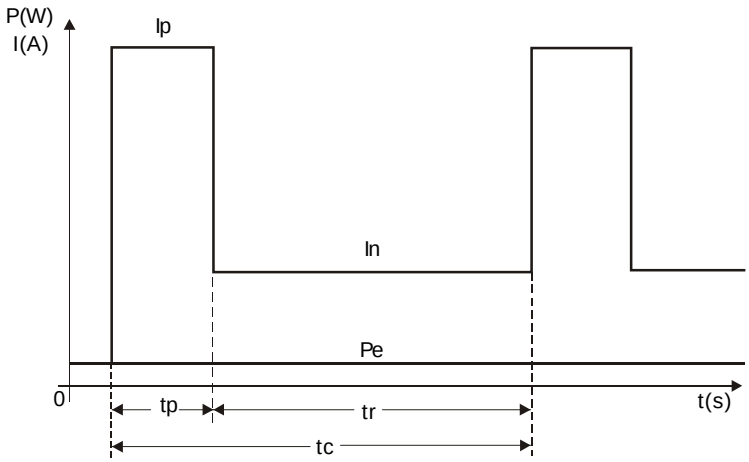

Figure 3.3 - *Soft-Starter SSW-06 working cycle for power loss determination*

3.1.3.2 Mounting on a Surface

The figure 3.4 shows the installation of the Soft-Starter SSW-06 on a mounting plate.

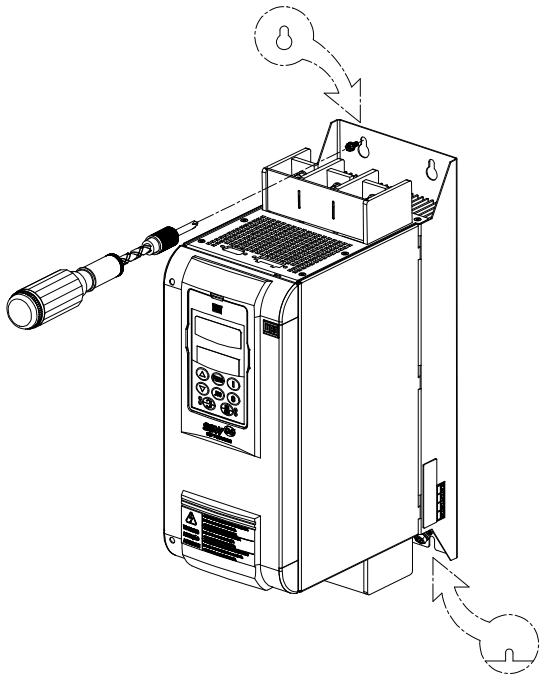

Figure 3.4 *- Mounting procedures for the SSW-06 on a flat surface*

First install and partially tighten the mounting bolts, in agreement with figures 3,1 and 3,4 and table 3.1, then install the Soft- Starter SSW-06 and tighten the mouthing bolts.

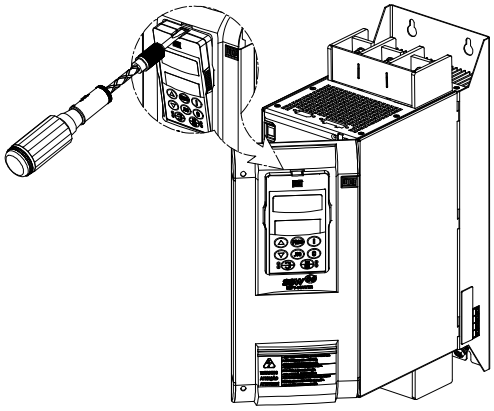

Figure 3.5 *- Procedures for HMI removal and front cover opening of the control connections*

3.2 ELECTRICAL INSTALLATION

DANGER!
The Soft-Starter SSW-06 cannot be used as an emergency stop device.

DANGER!
Be sure that the AC input power is disconnected before making any terminal connections.

ATTENTION!
The information below will be a guide to achieve a proper installation. Also follow all applicable local standards for electrical installations. Provide at least a 0.25m (10 in) space between the sensitive equipment and wiring from the Soft-Starter SSW-06, and the cables between the Soft-Starter SSW-06 and the motor. Example: PLC, temperature wiring, thermocouple cables, etc.

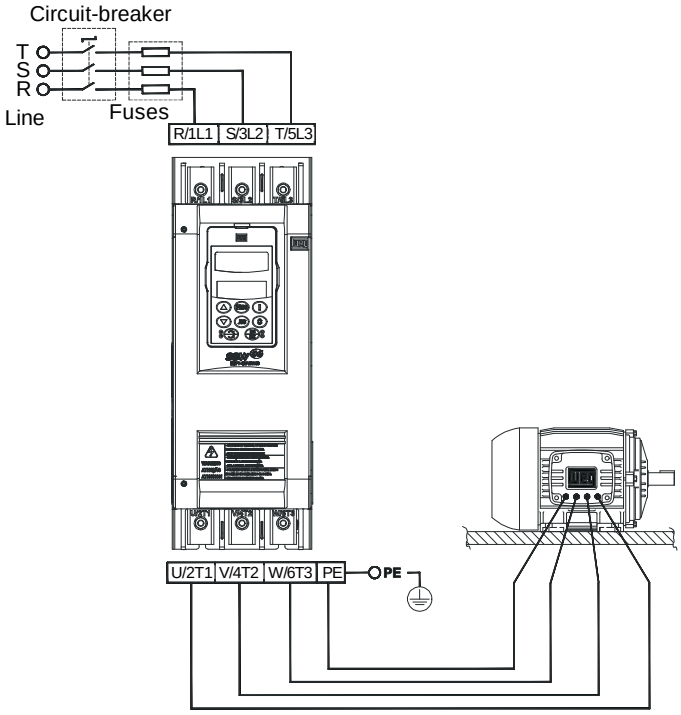

Figure 3.6 *- Standard power/grounding connections*

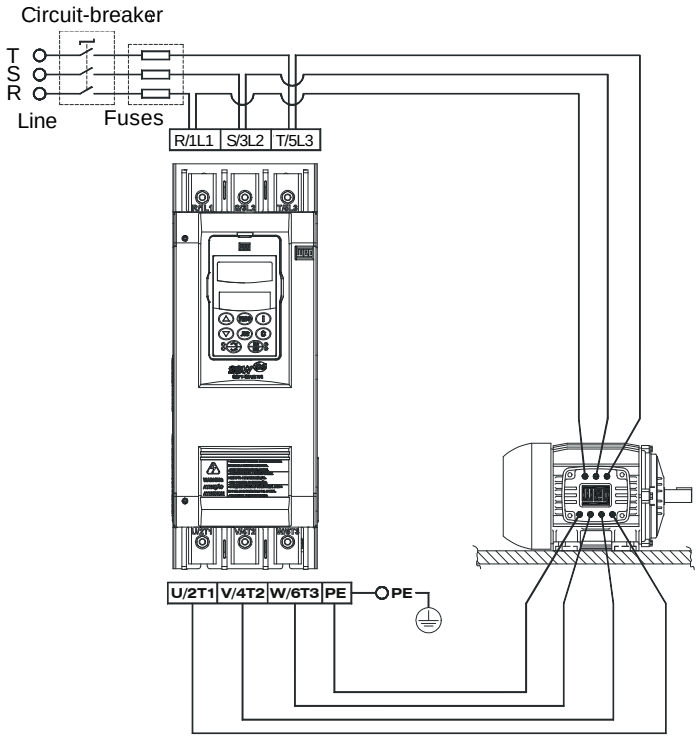

Figure 3.7 *- Power/Grounding connections for inside delta motor connection*

3.2.1 Power Terminals

The power connection terminals can be of different sizes and configurations, depending on the Soft-Starer SSW-06 model as shown in Figures 3.8 and 3.9.
Terminals:
R / 1L1, S / 3L2 and T / 5L3 : AC supply line
U / 2T1, V / 4T2 and W / 6T3: Motor connection.

a) Models: 85A and 130A

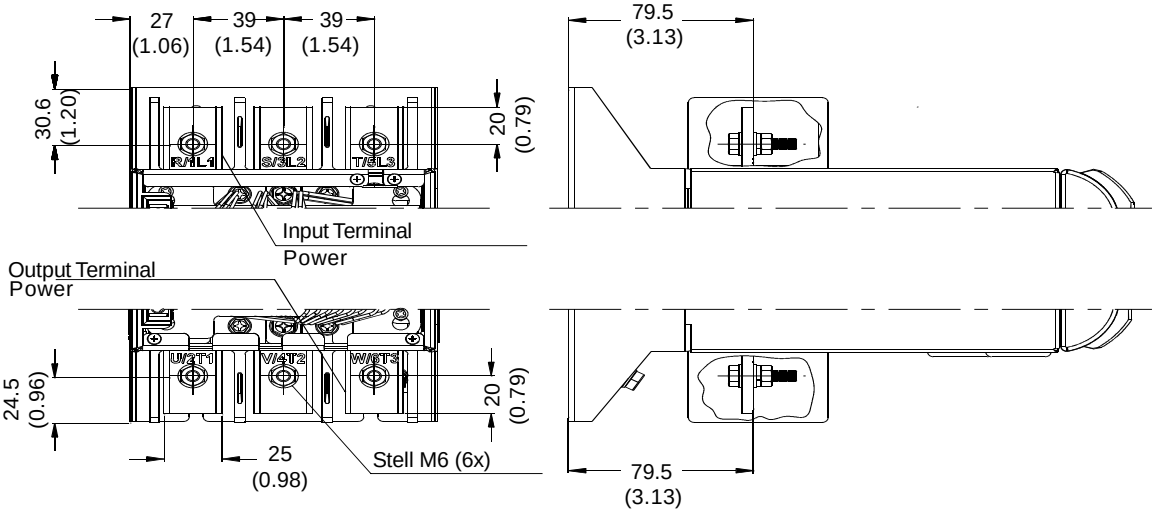

* Dimensions in mm (in)

Figura 3.8 a) *- Maximum tightening torque for power connection*

b) Models: 170A and 205A

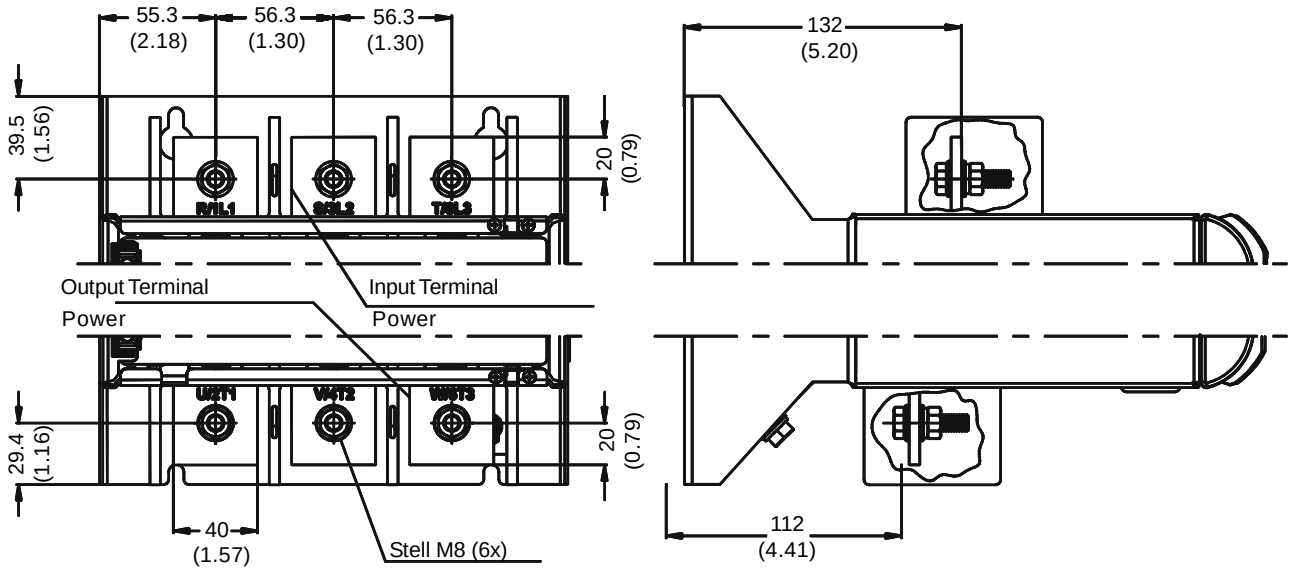

* Dimensions in mm (in)

c) Models: 225A, 312A, 365A, 412A, 480A and 604A

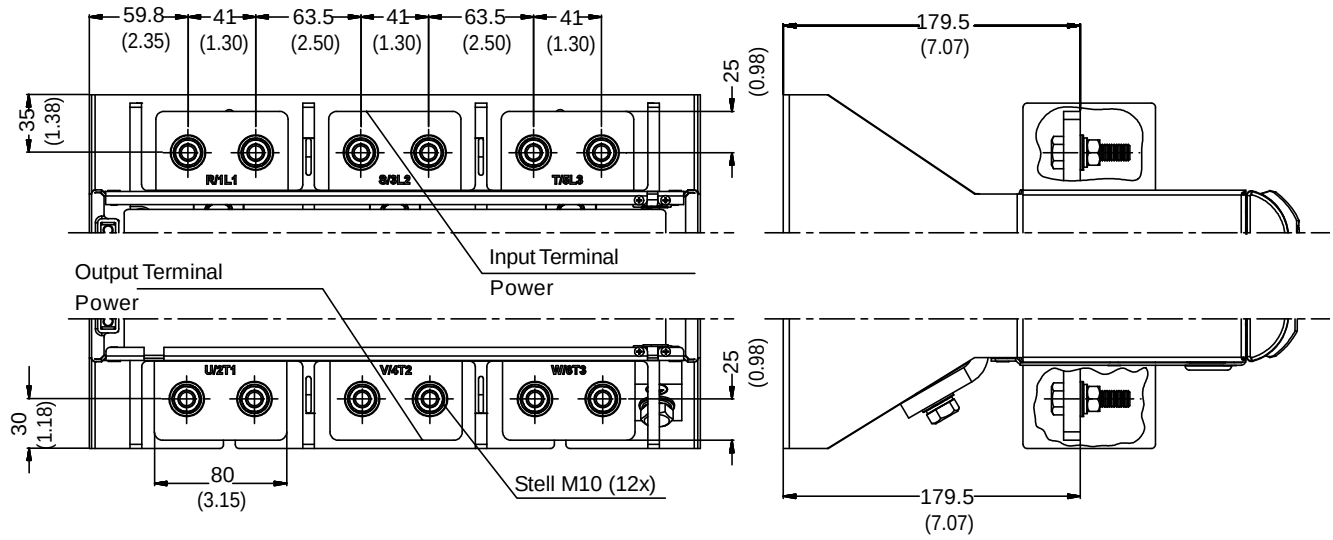

* Dimensions in mm (in)

Figura 3.8 b) c) *– Power terminals*

d) Models: 670A and 820A

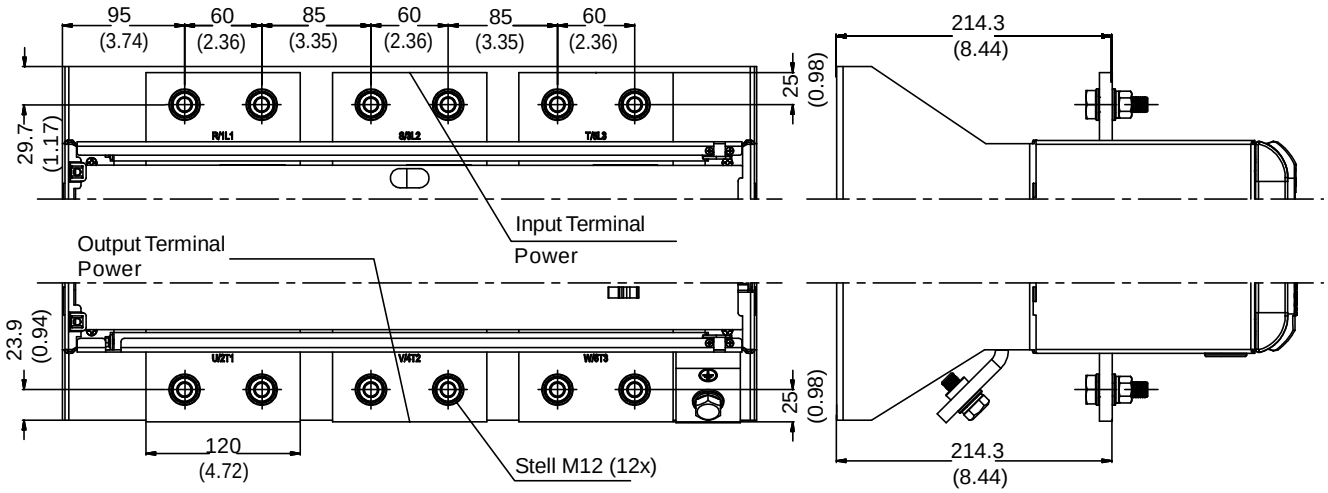

* Dimensions in mm (in)

e) Models: 950A

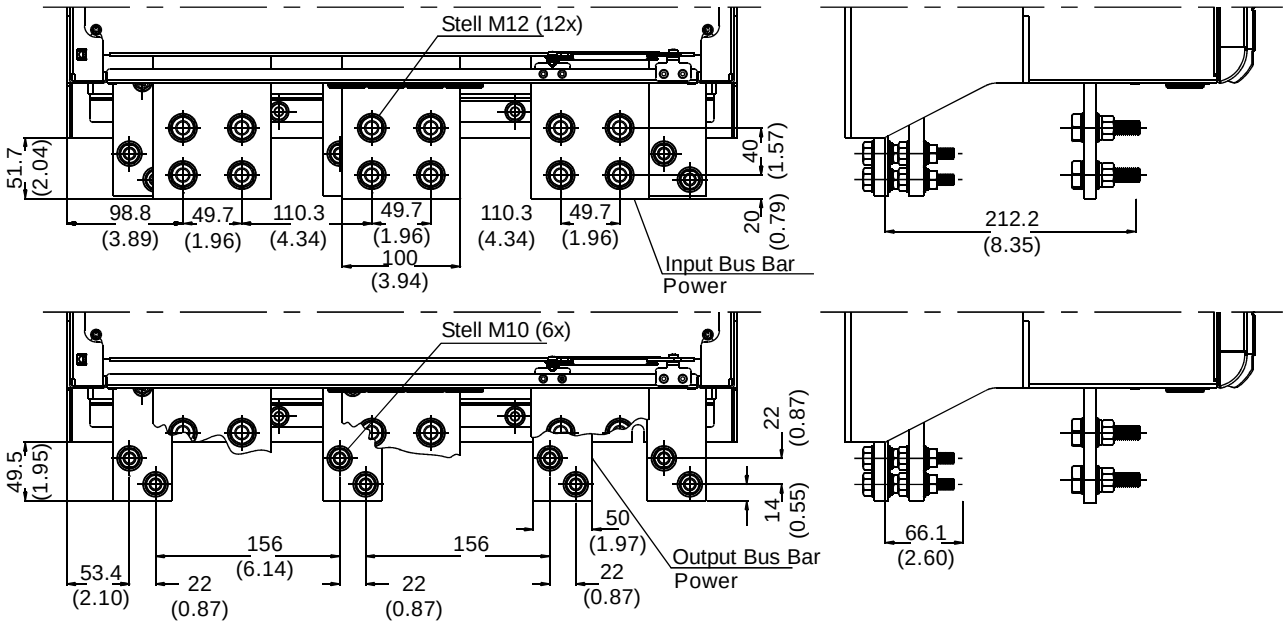

* Dimensions in mm (in)

Figura 3.8 d) e) *– Power terminals*

f) Models: 1100A and 1400A

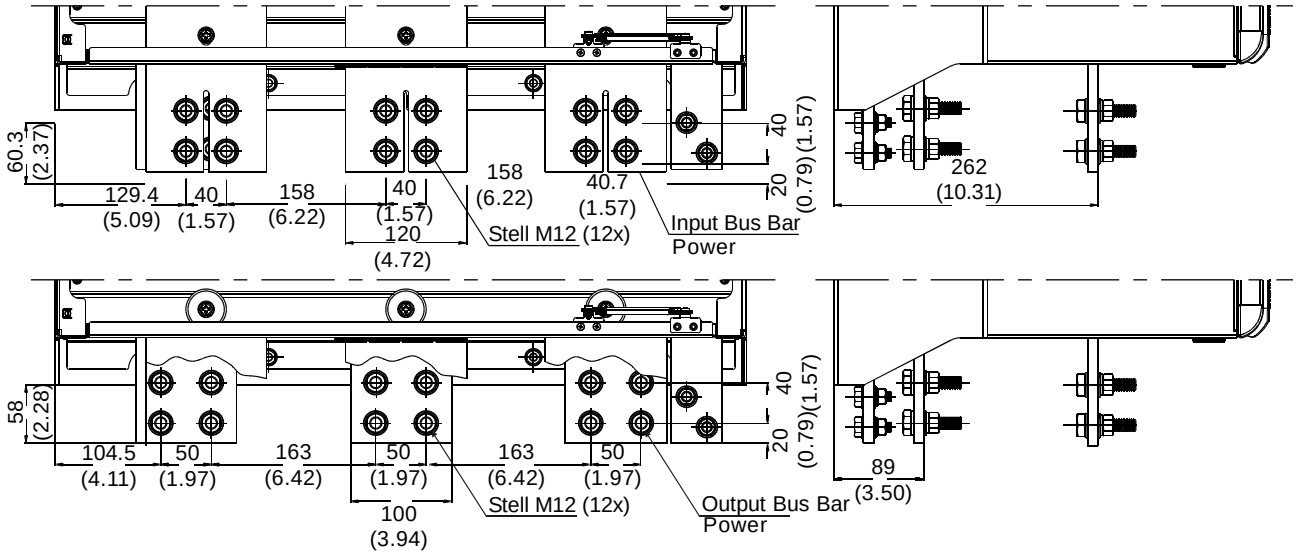

* Dimensions in mm (in)

Figura 3.8 f) *– Power terminals*

SSW-06	Line / Motor		Grounding	
	Bolt	Torque Nm (lb.in)	Bolt	Torque Nm (lb.in)
SSW-06.0085 SSW-06.0130	M6 (1/4")	8.3 (74.38)	M6 (1/4")	8.3 (74.38)
SSW-06.0170 SSW-06.0205	M8 (5/16")	19 (166.25)	M6 (1/4")	8.3 (74.38)
SSW-06.0255 SSW-06.0312 SSW-06.0365	M10 (3/8")	37 (328.12)	M10 (3/8")	37 (328.12)
SSW-06.0412 SSW-06.0480 SSW-06.0604	M10	37	M10	37
SSW-06.0670 SSW-06.0820	M12	61	M10	37
SSW-06.0950	M12	61	M10	37
SSW-06.1100 SSW-06.1400	M12	61	M10	37

Table 3.5 *- Maximum tightening Torque for power connection*

3.2.2 Location of the Power/ Grounding, Control Connections and Fan Voltage Selection

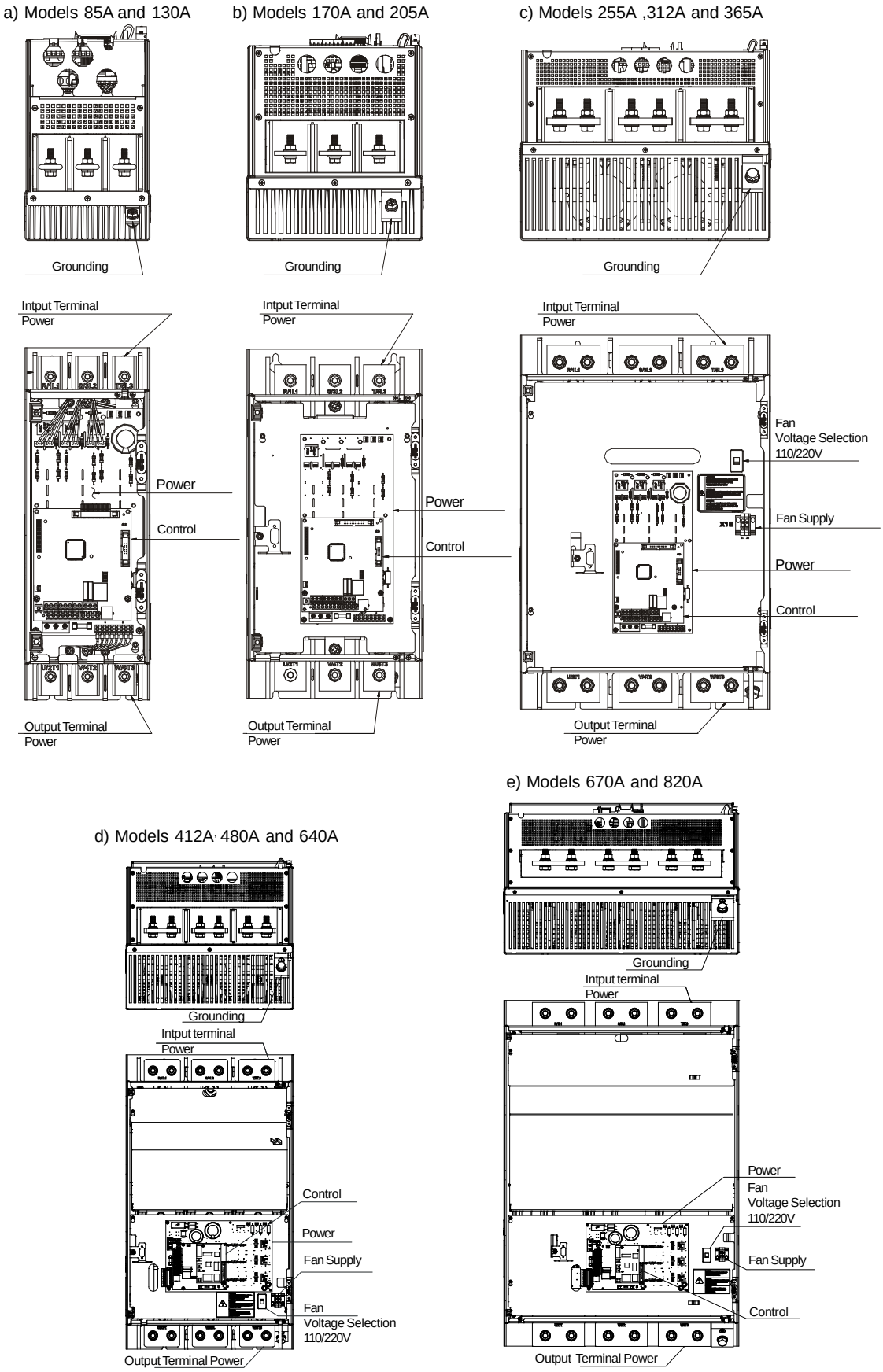

Figura 3.9 a) to e) *- Location of the Power/ Grounding, Control Connections and Fan Voltage Selection*

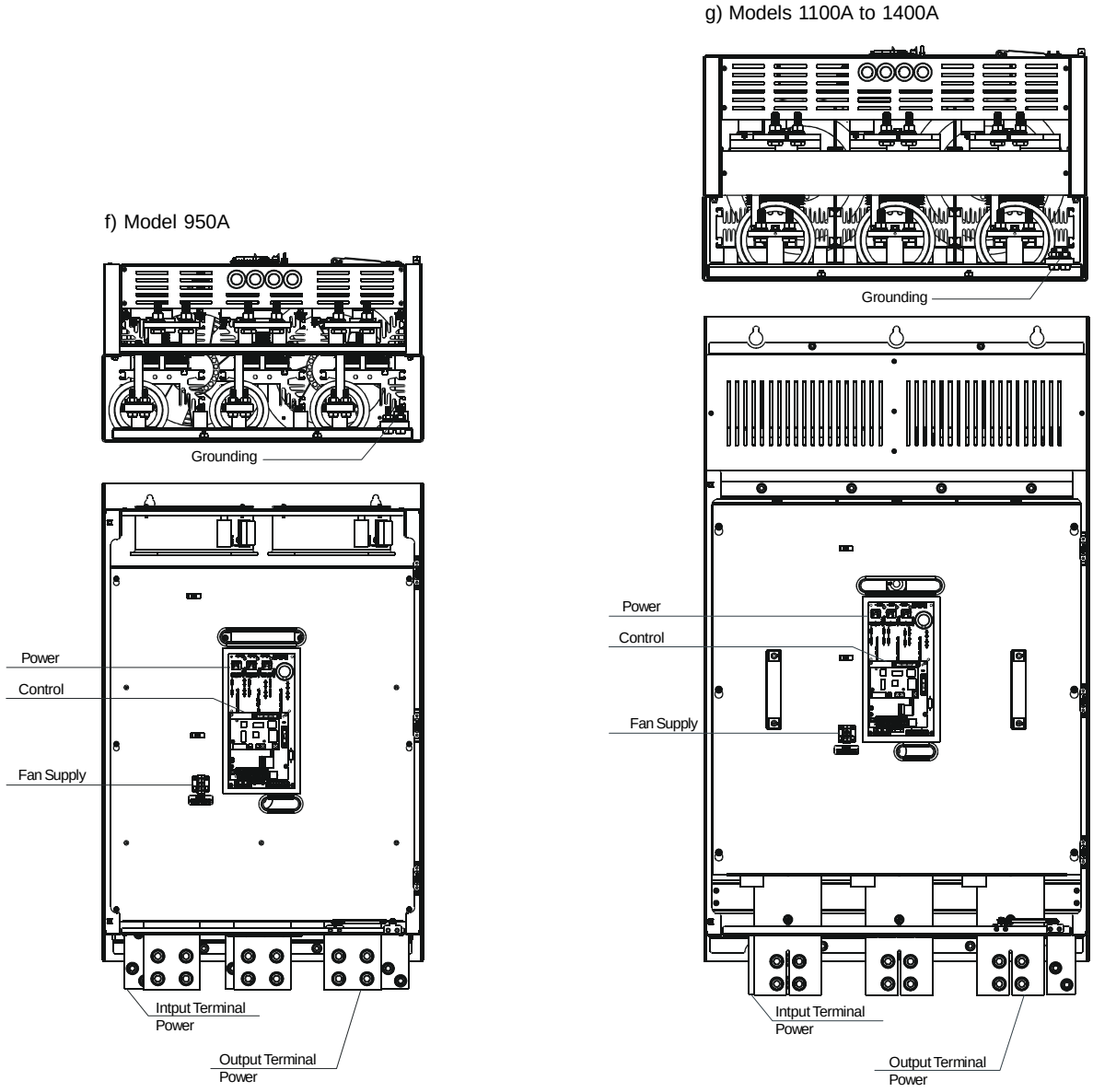

Figure 3.9 f) and g) *– Location of the Power, Grounding, Control and Selection Connections*

3.2.3 Recommended Power/ Grounding Cables

The described specifications in tables 3,6 and 3,7 are valid only for the following conditions:

- ☑ Copper wires with PVC 70°C (158ºF) PVC insulation, for room temperature of 40°C (104ºF) , installed in perforated and non-agglomerated conduits
- ☑ Naked or silver coared copper busbars with round edges and radius equal to 1 mm with room temperature of 40°C (104ºF) and bus temperature of 80°C (176ºF).

Obs.: When external By-pass contactors are applied, use the same cables or busbar applied for the motor connection.

NOTE!

For correct cable dimensioning, consider the installation condition and the maximum permitted line voltage drop.

Model	Current 100% In (A)	Cables (mm²)	Bus (mm x mm)	Grounding Cables (mm²)
SSW-06.0085	85	25	12 x 2	10
SSW-06.0130	130	50	20 x 3	25
SSW-06.0170	170	70	20 x 3	35
SSW-06.0205	205	95	20 x 3	50
SSW-06.0255	255	120	25 x 5	70
SSW-06.0312	312	185	25 x 5	95
SSW-06.0365	365	240	25 x 5	120
SSW-06.0412	412	240	30x5	120
SSW-06.0480	480	300	40x5	150
SSW-06.0604	604	2 x 150	40x5	150
SSW-06.0670	670	2 x 185	40x10	185
SSW-06.0820	820	2 x 240	40x10	240
SSW-06.0950	950	2 x 300	50x10	300
SSW-06.1100	1100	4 x 150	60x10	2 x 150
SSW-06.1400	1400	4 x 185	80x10	2 x 185

Table 3.6 *- Minimum specification of cables and busbars for standard connection*

Model	Current 100% In (A)	Line Cables (mm²)	Line Bus (mm x mm)	Motor Cables (mm²)	Motor Bus (mm x mm)	Grounding Cables (mm²)
SSW-06.0085	147	70	20 x 3	25	12 x 2	10
SSW-06.0130	225	95	20 x 3	50	20 x 3	25
SSW-06.0170	294	150	25 x 5	70	20 x 3	35
SSW-06.0205	355	185	25 x 5	95	20 x 3	50
SSW-06.0255	441	300	30 x 5	120	25 x 5	70
SSW-06.0312	540	400	40 x 5	185	25 x 5	95
SSW-06.0365	631	500	60 x 5	240	25 x 5	120
SSW-06.0412	713	2 x 185	40x10	240	30x5	120
SSW-06.0480	831	2 x 240	40x10	300	40x5	150
SSW-06.0604	1046	4 x 120	50x10	2 x 150	40x5	150
SSW-06.0670	1160	4 x 150	60x10	2 x 185	40x10	185
SSW-06.0820	1420	4 x 185	80x10	2 x 240	40x10	240
SSW-06.0950	1645	4 x 240	100x10	2 x 300	50x10	300
SSW-06.1100	1905	4 x 300	120x10	4 x 150	60x10	2 x 150
SSW-06.1400	2424	4 x 500	160x10	4 x 185	80x10	2 x 185

Table 3.7 *- Recommended cables for inside delta motor connection*

3.2.4 Connection of the Power Supply to the Soft-Starter

DANGER!
The AC input voltage must be compatible with the Soft-Starter SSW-06 rated voltage.

DANGER!
Provide power supply disconnecting switch. This disconnecting switch must disconnect the AC input voltage from the Soft-Starter SSW-06, always when required (for instance during maintenance services).

DANGER!
If a disconnect switch or a contactor is inserted in the motor supply line, DO NOT operate these devices with running motor or when Soft-Starter SSW-06 is enabled.

ATTENTION!
Control of overvoltage in the line that supplies the Soft-Starter must be made using surge protection with a voltage of 680 Vac (phase to phase connection) and energy absorption capacity of 40 joules (for models from 85A to 205A) or 80 joules (for models from 255A to 1400A).

NOTE!
Use wire sizing and fuses as recommended in Table 3.6, 3.7 and 3.9. The connector tightening torque is as indicated in Table 3.5. Use 70ºC (158ºF) copper wires only.

3.2.4.1 Power Supply Capacity

The SSW-06 Soft-Starter is suitable to use in a circuit capable of supplying at most the current (symmetric Arms) established for each model, and, respective voltage (V) according to table 3.8. This, when protected by high speed semiconductor fuses.

Model	Standard Connection 220-575V (kA)	Inside - Delta Connection 220-575V (kA)
SSW-06.0085	10	10
SSW-06.0130	10	18
SSW-06.0170	10	18
SSW-06.0205	10	18
SSW-06.0255	18	30
SSW-06.0312	18	30
SSW-06.0365	18	42
SSW-06.0412	30	42
SSW-06.0480	30	42
SSW-06.0604	42	85
SSW-06.0670	42	85
SSW-06.0820	85	85
SSW-06.0950	85	100
SSW-06.1100	85	100
SSW-06.1400	85	125

Table 3.8 *- Maximum current capacity of the power supply*

3.2.4.2 Recommended Fuses

The fuses to be used in the input must be high speed semiconductor fuses with I^2t lower of equal to 75% of the SCR value indicated above (A^2s).
These fuses will protect the SRCs in case of a short-circuit. Normal fuses can also be used, instead of the high speed, which will protect the installation from short-circuits, but the SCRs will not be protected.

Model	Standard Connection In (A)	Delta - Inside Connection In (A)	I^2t of the SCR (kA^2s)
SSW-06.0085	200	315	80
SSW-06.0130	250	350	84
SSW-06.0170	450	500	245
SSW-06.0205	500	550	320
SSW-06.0255	500	700	238
SSW-06.0312	500	700	238
SSW-06.0365	550	700	320
SSW-06.0412	700	1250	1452
SSW-06.0480	900	1400	4250
SSW-06.0604	900	1600	4250
SSW-06.0670	900	1600	4250
SSW-06.0820	1400	2000	4250
SSW-06.0950	1600	2200	14000
SSW-06.1100	1600	2500	14000
SSW-06.1400	2000	3000	15125

Table 3.9 *- Recommended Fuses.*

3.2.5 Connection of the SSW-06 Soft-Starter to the motor

DANGER!
Power factor correction capacitors should never be installed at the output of the Soft-Starter SSW-06 (U / 2T1, V / 4T2 and W / 6T3).

ATTENTION!
For the protections based on the current reading and indication to work correctly, in case of overload protection, the rated current of the motor cannot be lower than 30% of the rated current of the SSW-06 Soft-Starter.
It is not recommended to use motors with the load working duty lower than 50% of its rated current.

NOTE!
Use wire sizing and fuses as recommended in Table 3.6, 3.7 and 3.9. The connector tightening torque is as indicated in Table 3.5. Use 70ºC (158ºF) copper wires only.

NOTE!
Soft-Starter SSW-06 is provided with an electronic protection against motor overload. This protection must be set according to the specific motor. When several motors are connected the same Soft-Starter SSW-06, use individual overload relays for each motor.

☑ The SSW-06 Soft-Starter can be connected to the motor in two ways, according to 3.2.5.1 and 3.2.5.2.

3.2.5.1 Standard Three-Wire Connection (P150=0=Inactive)

The standard 3 wires connection allows the SSW-06 Soft-Starter line current to be equal to the motor current.

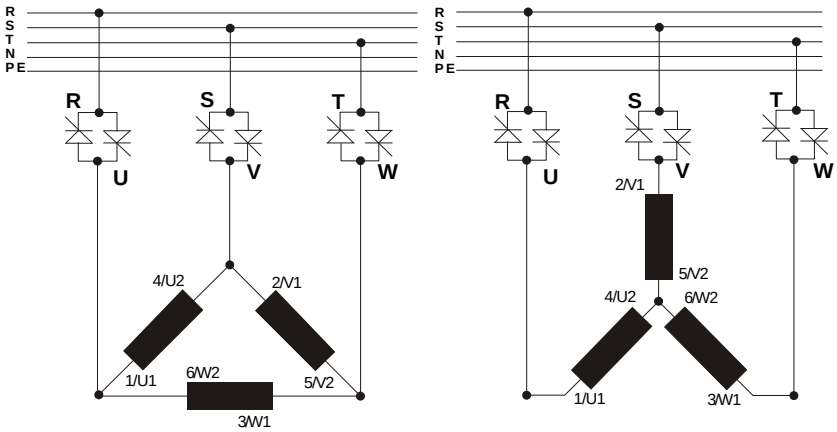

Figure 3.10 - *Soft-Starter SSW-06 with standard connection*

3.2.5.2 Inside Delta Motor Connection (P150=1=Active)

In this kind of connection, the SSW-06 Soft-Starter line current is equal to approximately 58% of the rated current of the motor.

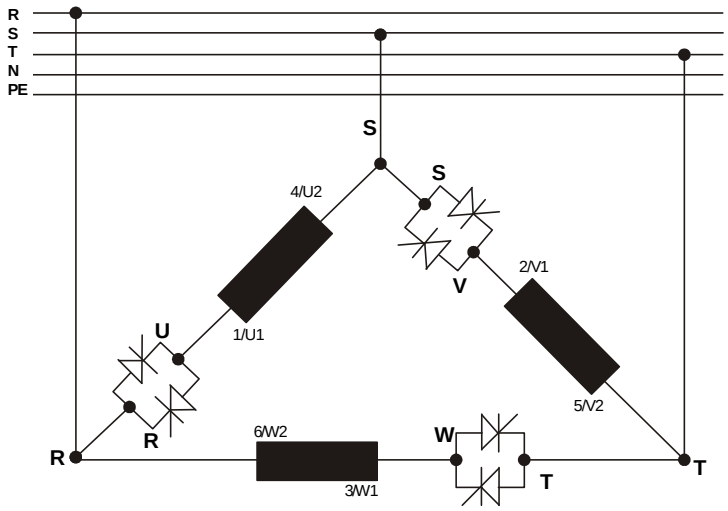

Figure 3.11 - *Soft-Starter SSW-06 Inside Delta Motor Connection*

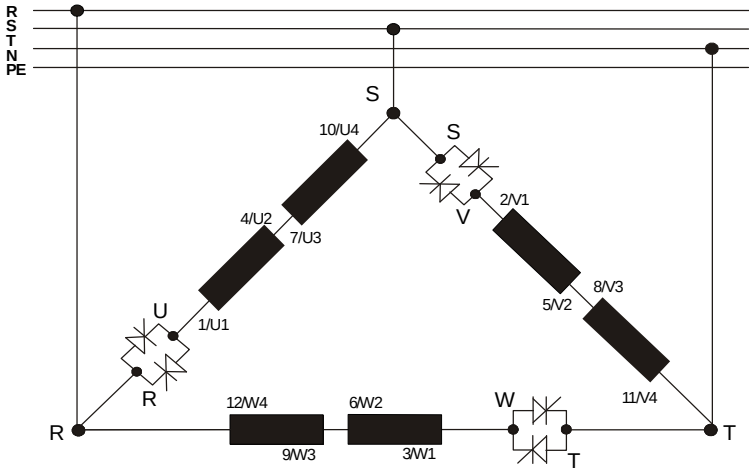

Figure 3.12 - *Soft-Starter SSW-06 Inside Delta Motor Connection - motor with double delta series connected.*

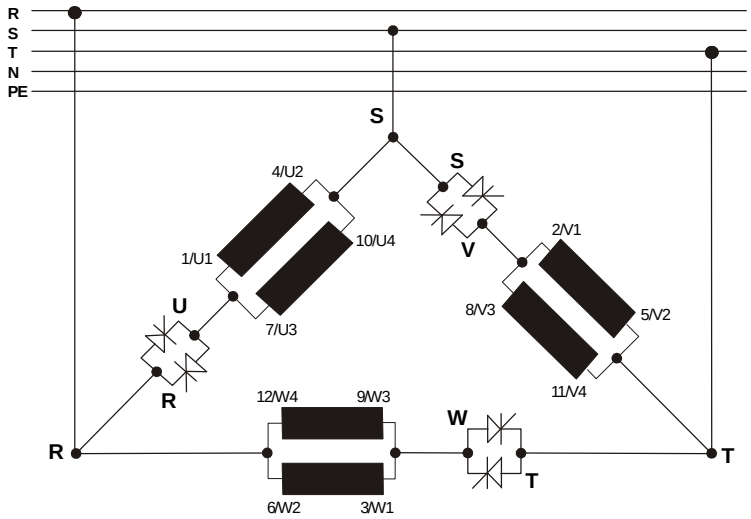

Figure 3.13 - *Soft-Starter SSW-06 Inside Delta Motor Connection - motor with double delta parallel connected.*

ATTENTION!
For the connection inside the delta of the motor, the motor must have a delta connection in the desired voltage.

NOTES!

1) In the motor inside delta connection, the SSW-06 Soft-Starter connection cables to the power supply, fuses and/or the main contactor must support the rated current of the motor. The motor connection cables to the Soft-Starter and/or the external By-pass contactor connection must support 58% of the rated current of the motor.

2) Due to the presence of high currents and large cable sizes requirements, we also recommend the use of copper busbars for connecting the Soft-Starter SSW-06 to the power supply.

3) During the start of the motor current in relation to the Soft-Starter is 1.50. However in full voltage condition (after the start time of the motor) the current relation is 1.73.

ATTENTION!
Pay attention to the connection of the motor to the SSW-06 Soft-Starter, respect the connection diagrams shown in the figures above according to the type of motor windings. If it is necessary to change the motor speed direction, only invert the SSW-06 Soft-Starter connections to the power supply.
Maintain the electronics turned off during the connection changes.

ATTENTION!
Ensure correct setting of Parameter P150 before the motor is switched ON. Soft-Starter SSW-06 may be damaged, when this parameter setting is not correct

P150	Action
0 (Inactive)	Soft-Starter SSW-06 with standard connection to motor
1 (Active)	Soft-Starter SSW-06 inside of the delta motor connection

Table 3.10 - Connection of the Soft-Starter to the motor

3.2.6 Grounding Connections

DANGER!
The Soft-Starter SSW-06 must be grounded for safety purposes (PE). The earth or ground connection must comply with the local regulations. For grounding, use cables with cross section as indicated in Table 3.6. Make the ground connection to a grounding bar or to the general grounding point (resistance ≤ 10 ohms).

DANGER!
The AC input for the Soft-Starter SSW-06 must be grounded.

DANGER!
Do not use the neutral conductor for grounding purpose. Use a specific ground conductor.

ATTENTION!
Do not share the ground wiring with other equipment that operate with high currents (for instance, high voltage motors, welding machines, etc). When more than one self-starter SSW-06 used, see 3.14 figure.

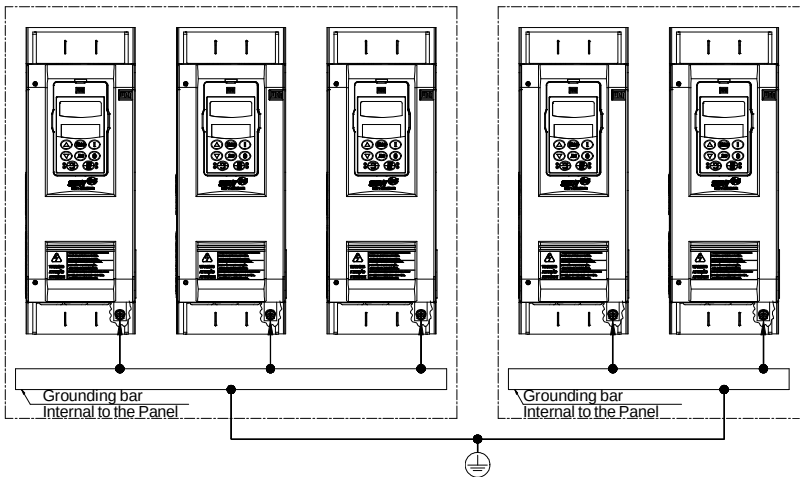

Figure 3.14 *- Grounding connections for more than one Soft-Starter SSW-06*

EMI – Electromagnetic interference:
The Soft-Starter SSW-06 is developed to be used in industrial systems (Class A) as per Norm EN60947-4-2.
It's necessary to have a distance of 0,25m (10in) between the Soft-Starter SSW-06 and the cables between the Soft-Starter SSW-07 and the motor. Example: PLC wiring, temperature controllers, thermocouple cables, etc.

Grounding the motor frame:
Always ground the motor frame. Ground the motor in the panel where the Soft-Starter SSW-06 is installed. The Soft-Starter SSW-06 output wiring to the motor must be laid separately from the input wiring, as well as from the control and signal cables.

3.2.7 Fan Connections

Available in models 255A to 820A. The rated voltage of the fans can also be selected.

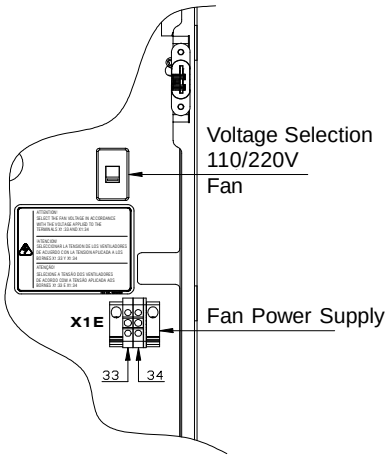

Figura 3.15 *– Selection of the Fan Voltage*

Connector X1E pins 33 and 34. More details see figure 3.16.

NOTE!
The fans are switched on if the heatsink temperature is above 70ºC (158ºF). Do not forget to connect the fan power supply and select the fan supply voltage for the models higher than 255A.

3.2.8 Signal and Control Connections

The signal connections (analog outputs) and control (relay inputs and outputs) are made on the electronic card connectors.
Conectors:
CCS6 and CPS63 to the models 85A to 365A and 950A to 1400A.
CCS6 and CPS64 to the models 412A to 820A.

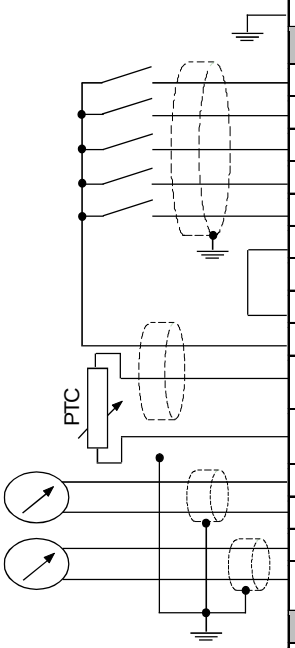

Conector X1A		Description	Specifications
1	Phase	Eletronic Supply	(110 to 230)Vac (-15% to +10%) or (94 to 253)Vac Operation Current: 280nA Max.
2	Neutral		
PE	Ground		
Connector X1B		**Factory Standard Function**	**Specifications**
3	DI1	Motor Enable/Disable	5 isolated digital inputs Minimum high level: 18Vdc Maximum low level: 3Vdc Maximum voltage: 30Vdc Input current: 11mA@24Vdc
4	DI2	Error Reset	
5	DI3	Not Used	
6	DI4	Not Used	
7	DI5	Not Used	
8	COM	Common point of the Digital Inputs	Only use for Digital Inputs
9	COM	Common point of the Digital Inputs	
10	DGND	0V reference of the 24Vdc source	
11	24Vcc	Digital Input Supply	
12	PTCB	DI6 - Not Used	Operation: 3k9Ω Release: 1k6Ω Minimum resistance: 110Ω PTCB referenced to DGND Through 249Ω resistor
13	PTCA		
14	AGND	Input for motor Thermistor	(0 to 10)V, RL 10k (maximum load) Resolution: 11 bits
15	AO1		
16	AGND	Analog Output 1 - Not used	(0 to 20)mA or (4 to 20)mA RL=500Ω/1%@10V Resolution: 11 bits
17	AO2		
Conector X1C		**Factory Standard Function**	**Specifications**
18	RL1 NA	Relay Output - Run	Contactor capacity: 1A 24Vac
19	RL1 NA		
20	RL2 NA	Relay Output - Full Voltage	
21	RL2 NA		
22	RL3 NA	Relay Output – No Error	
23	RL3 C		
24	RL3 NF		
Conector X1D		**Description**	**Specifications**
25	TERM.	Over-temperature thermostat	Internal connection of the Soft-Starter
26	TERM.		
27	TC 1/R VER	Current transformer phase R	
28	TC 1/R PRET		
29	TC 2/S VER	Current transformer phase S	
30	TC 2/S PRET		
31	TC 3/T VER	Current transformer phase T	
32	TC 3/T PRET		
Connector X1E		**Descrição**	**Specifications**
33	Phase	Fan Supply (from model 255A)	(101 to 127)Vac or (207 to 253)Vac Operation current: see table 3.4
34	Neutral		

Nota: NC = Normally Closed Contact
NO = Normally Open Contact
C = Common

Figure 3.16 - *Control Terminal Description*

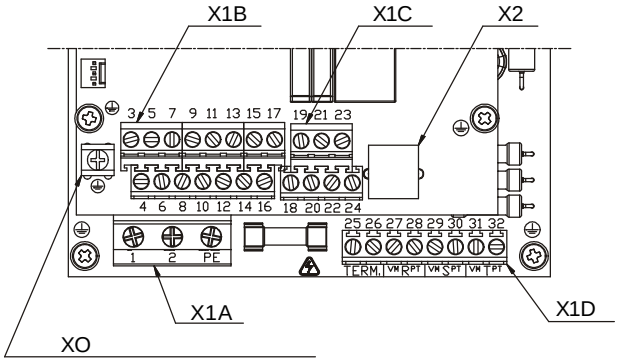

Figure 3.17 - *Control connector disposition*

For signal and control wire installation, adopt the following procedures:

1) The connections of the SSW-06 digital inputs can be carried out in several ways. They can be supplied by auxiliary internal +24Vdc source by using the 0V as a common point or by the +24Vdc source. Depending on the application requirements,they can also be supplied by external +24Vdc source , connected to PLCs, by using the 0V as common point or by the +24Vdc source.:

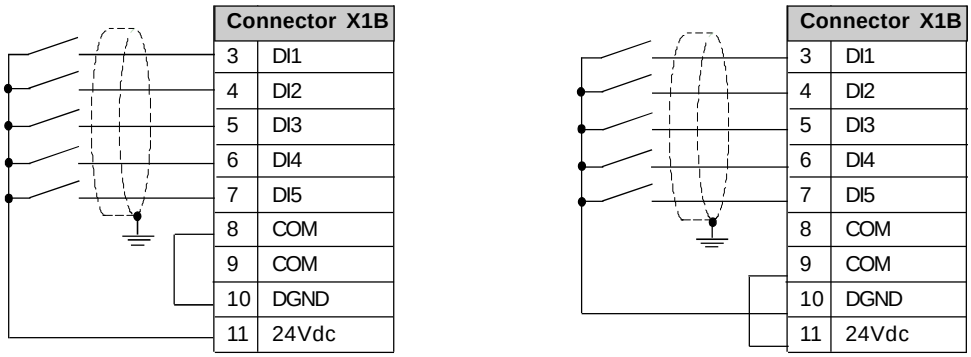

Figure 3.18 *- Connection diagram of the digital inputs using an the auxiliary internal source*

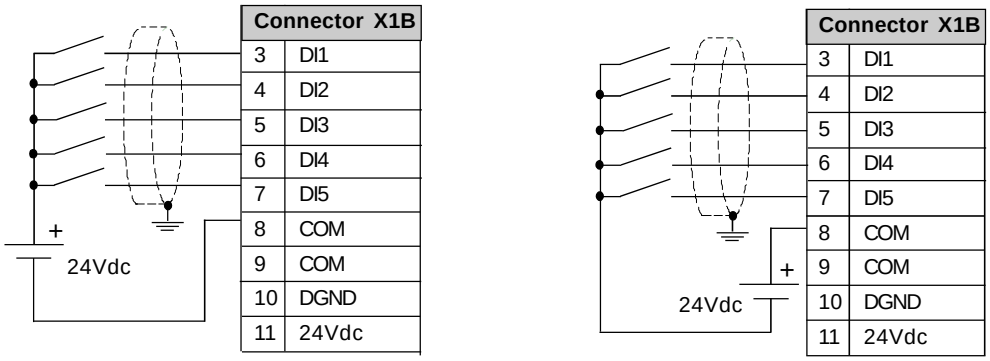

Figure 3.19 *- Connection diagram of the digital inputs using an external source*

NOTE!

1) The auxiliary electronic power supply of the SSW-06 Soft-Starter of +24Vdc shall only be used for the supply of the digital inputs.

2) The SSW-06 Soft-Starter factory default is with the pins 8 and 10 of the X1B connector switched on (wire bridge).

3) Cable cross section (0,5 to 1,5) $mm^{2;}$

4) Maximum torque: 0.50 N.m (4.50 ibf.in).

5) X1B wiring must be connected with shielded cables and installed separately from other wiring (power, control at 110V/220V, etc.), according to Table 3.11.

Wiring Length	Min. separation distance
≤ 30 m (98.4 ft)	≥ 10 cm (3.94 in)
> 30 m (98.4 ft)	≥ 25 cm (9.84 in)

Table 3.11 *- Wiring separation distances*

If the crossing of these cables is unavoidable, install them perpendicular, maintaining a minimum separation distance of 5cm (2 in) at the crossing point.

Connect the shield as shown below:

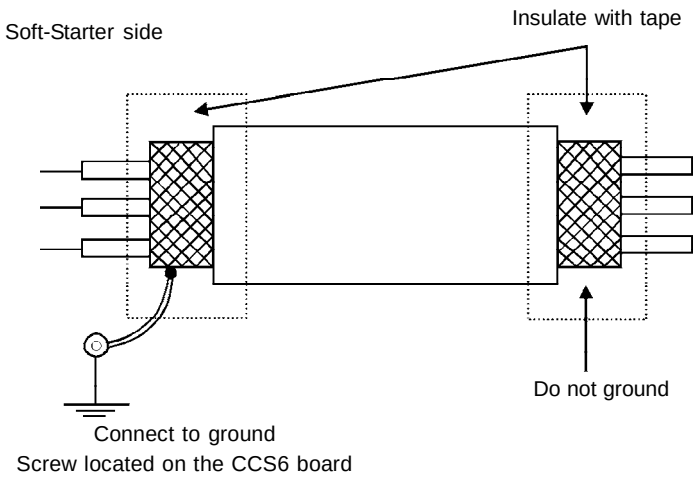

Figure 3.20 *- Shield connection*

6) For wiring distances longer than 50m (150ft), it is necessary to use galvanic isolators for the X1B:3...17signals.

7) Relays, contactors, solenoids or electromagnetic braking coils installed near Soft-Starters can generate interference in the control circuit. In order to eliminate this interference, connect RC suppressors in parallel with the coils of AC relays. Connect a free - wheeling diode in case of DC relays/coils.

8) When an external keypad (HMI) is used (Refer to Chapter 8), separate the cable that connects the keypad to the Soft-Starter SSW-06 from other cables, maintaining a minimum distance of 4 in (10 cm) between them.

3.2.9 RS-232, X2 Serial Communication Connection

This connector is used to make a standard RS232 communication line between the Soft-Starter SSW-06 and a PC and/or PLC.
For more details see the Serial Communication Manual of the Soft-Starter SSW-06.

3.2.10 RS-485, XC8 Isolated Serial Communication Board Connection

An optional board of serial communication, standard RS-485 with galvanic insulation, can be attached to this connector.
For more details see the Serial Communication Manual of the Soft-Starter SSW-06.

3.2.11 XC6 Fieldbus Communication Board Connection

An optional Profibus DP or DeviceNet Communication board can be attached to this connector.
For more details see the Profibus DP or DeviceNet Communication Manual of the Soft-Starter SSW-06 and chapter 9.

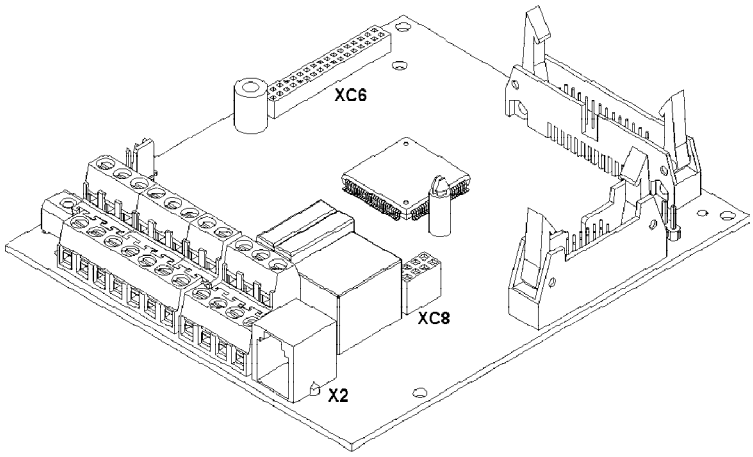

Figure 3.21 *– X2, XC6 and XC8 Connector*

3.3 RECOMMENDED SET-UPS

In this item some suggestive starters are presented, which can be used completely or in part to elaborate the desired control.
The main warnings, for all the suggestive starters, listed below, are related in the diagrams through their respective numbers.

NOTES!

(1) For the protection of all of the electrical installation, the use of fuses or circuit breakers in the main power supply circuit is necessary.
The use of high speed semiconductor fuses are not necessary for the functioning of the SSW-06 Soft-Starter, but its use is recommended for the complete protection of the thyristors.

(2) The transformer “T1” is optional and should be used when the line voltage is different from the electronics and fan voltage;

(3) To protect the motor against destruction by possible short-circuits in the power circuit of the Soft-Starter SSW-06 use an isolating contactor (K1) or circuit-breaker (Q1);

4. X1E (33 and 34) is only available in the models fitted with cooling fans;

5. For integral motor protection the installation of one or more PTC thermistors (PTC at the DI6) or thermostats (external fault at the DI4 to DI6) is recommended;

6. Remember that when a command via two-wire digital input is used (the switch is normally open with retention), every time the power supply returns, after any fault, the motor starts immediately if the switch remains closed;

7. In case of maintenance services, remove the power supply fuses or disconnect the power supply, thus ensuring complete equipment disconnection from the power supply;

8. The emergency stop can be obtained by disconnecting the electronics power supply.

9. The contactors must be of the same model and must support the motor starting current. For safety reasons, auxiliary contacts must be used to keep both contactors from closing at the same time.

10. Use a digital input set to “General Enable” to dissable the motor without braking. Use a digital input set to “No Braking”, for safety reasons, with the possibility of putting a motor stop sensor to disable the braking.

11. The use of an external By-pass contactor is optional for models 950A to 1400A that do not have an internal By-pass contactor. This contactor is also recommended, in models with an internal by-passs, for use in applications where the motor can frequently present a blocked rotor during the full operation cycle.

12. To maintain the current indications and protections, when using the external By-pass contactor, it is necessary to place the current transformers in the soft starter output. The current transformers must be placed in the correct positions and directions as indicated.

ATTENTION!

In the first power-up, in the models of 85A to 365A, if a contactor or a circuit-breaker of insulation of the power supply with under voltage release will not be used, to connecting the control power supply first, program the minimum necessary parameters and only after connecting the power supply.

3.3.1 Recommended Set-ups by Keypad (HMI) Command With Isolating Contactor.

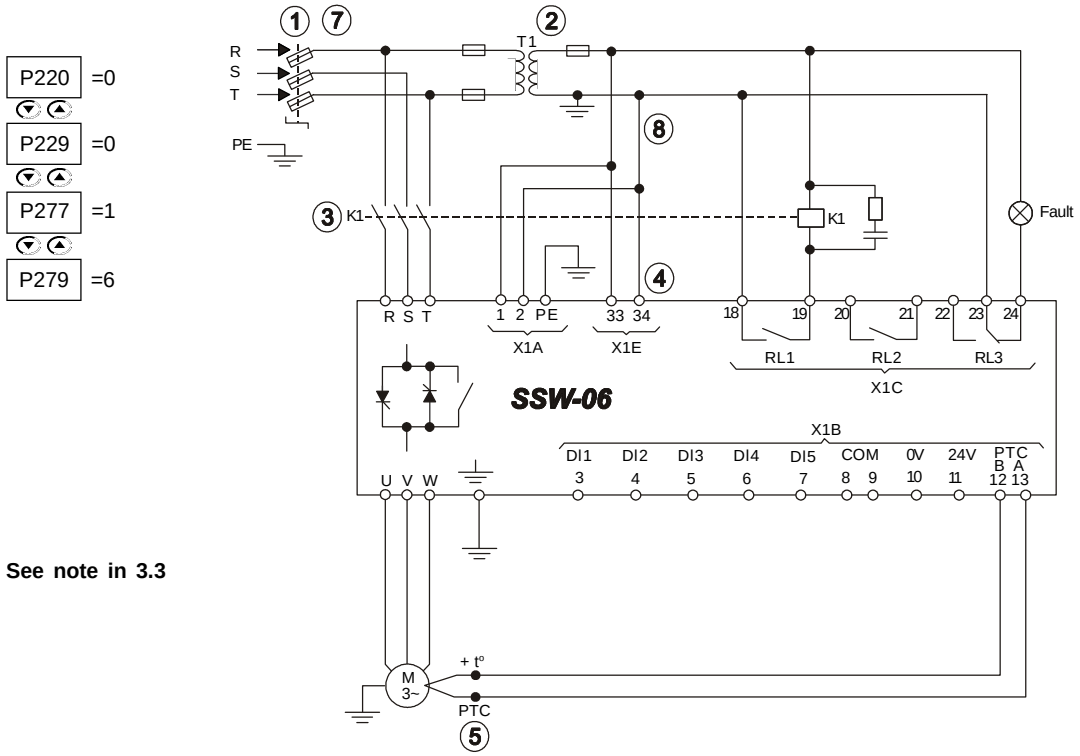

Figure 3.22 *- Recommended Set-ups by Keypad (HMI) command with isolating contactor*

3.3.2 Recommended Set-ups by Keypad (HMI) Command with Circuit-breaker.

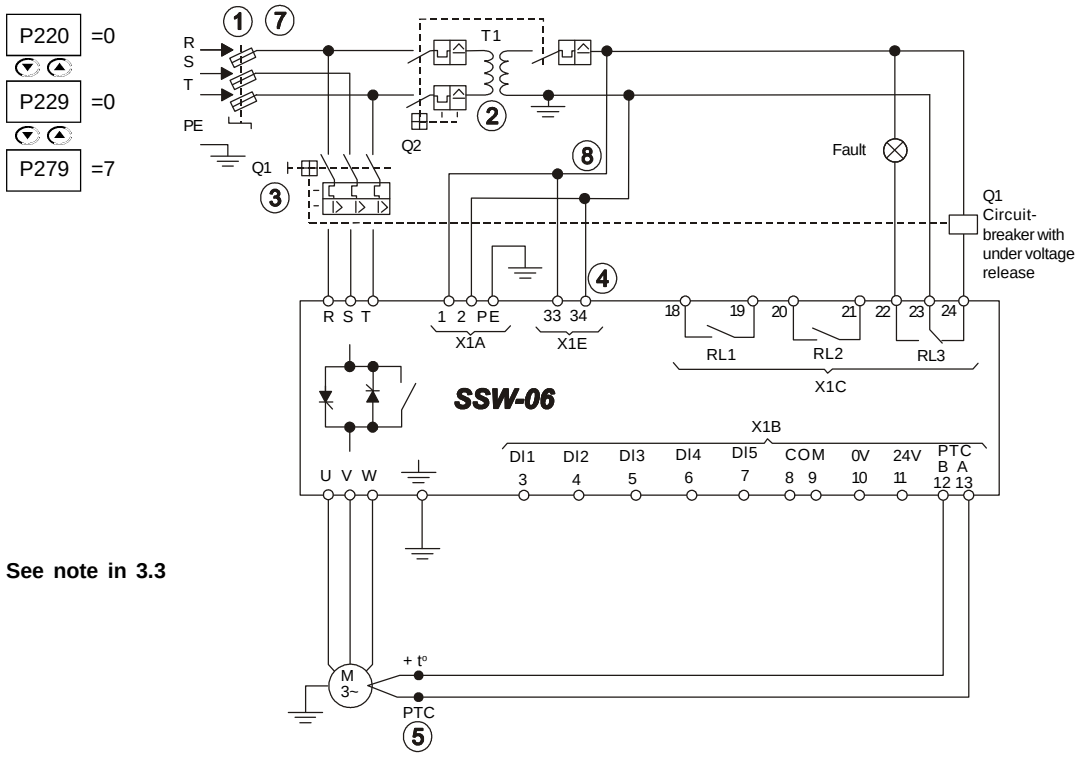

Figure 3.23 *- Recommended Set-ups by Keypad (HMI) command with circuit-breaker*

3.3.3 Recommended Set-ups with Command via Two-wire Digital Inputs.

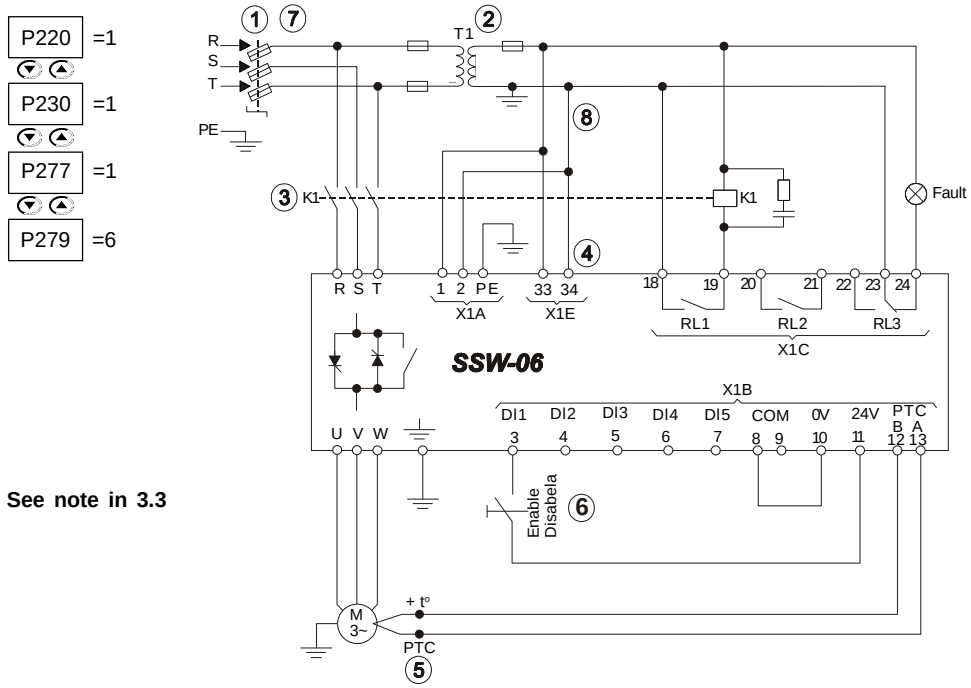

Figure 3.24 *- Recommended set-ups with command via two-wire digital inputs*

3.3.4 Recommended Set-ups with Command via Three-wire Digital Inputs.

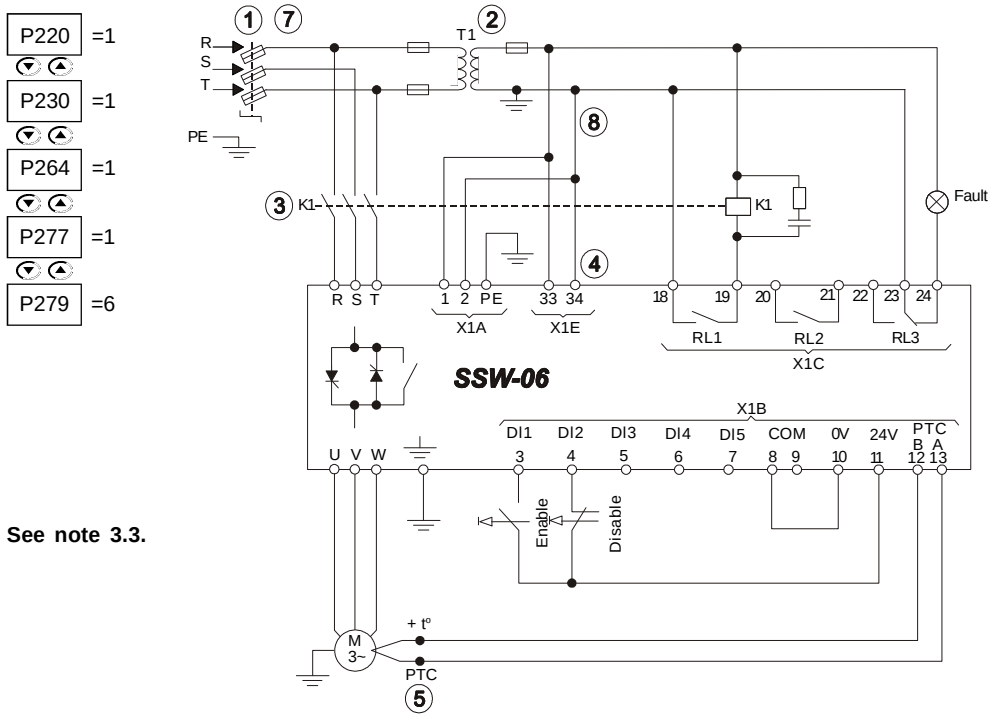

Figure 3.25 *– Recommended set-ups with command via three-wire digital inputs*

3.3.5 Recommended Set-ups with Command via Three-wire Digital Input and Inside Delta Motor Connection.

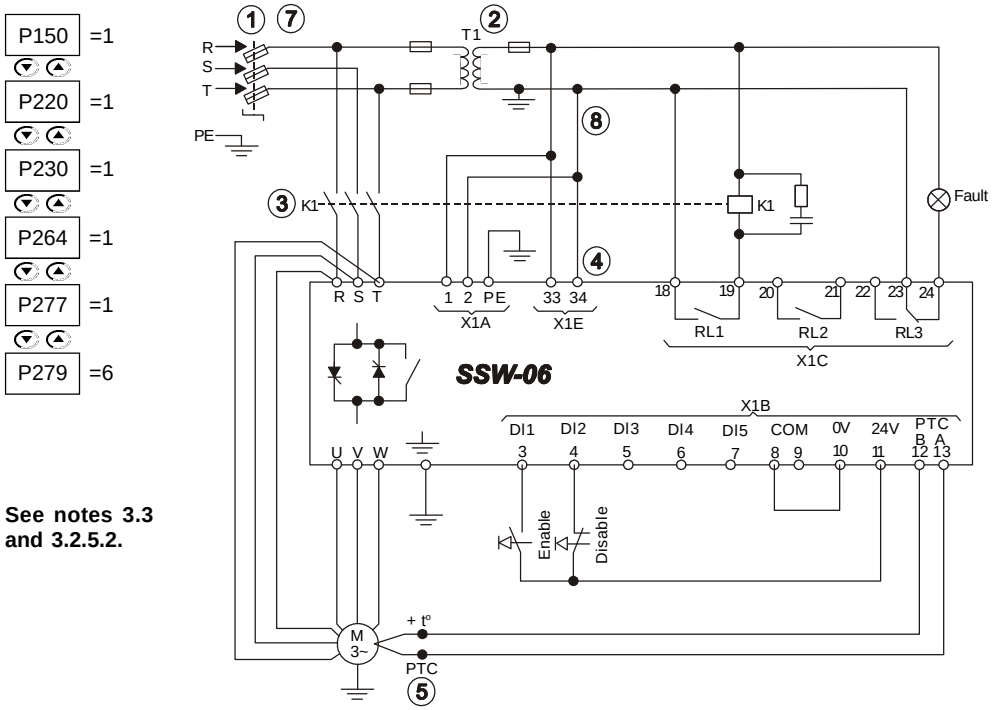

Figure 3.26 *– Recommended set-ups with command via three-wire digital input and inside delta motor connection.*

3.3.6 Recommended Set-ups with Command via Three-wire Digital Input or Serial Communication.

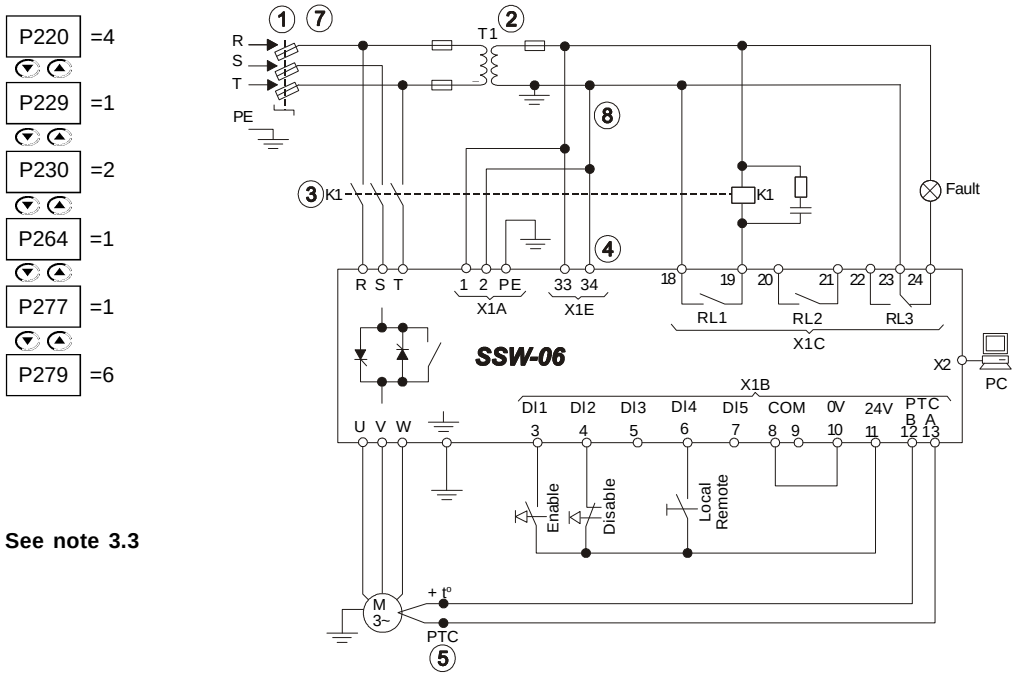

Figure 3.27 *- Recommended set-ups with command via three-wire digital input or serial communication*

3.3.7 Recommended Set-ups with Command via Three-wire Digital Input or Fieldbus Communication.

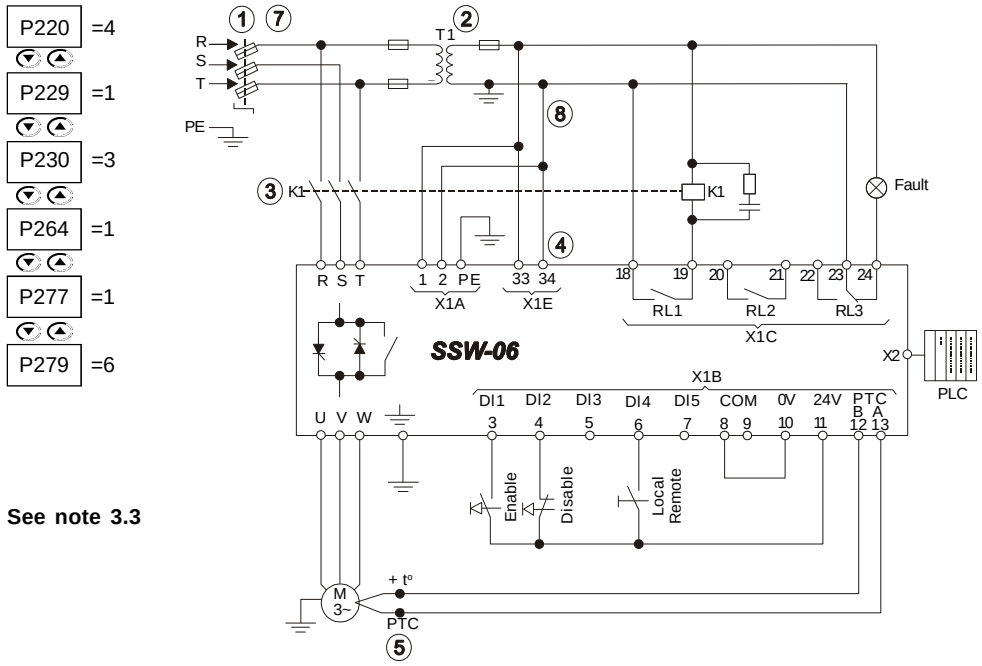

Figure 3.28 *- Recommended set-ups with command via three-wire digital input or fieldbus communication*

3.3.8 Recommended Setup with Command via Digital Inputs and direction of rotation.

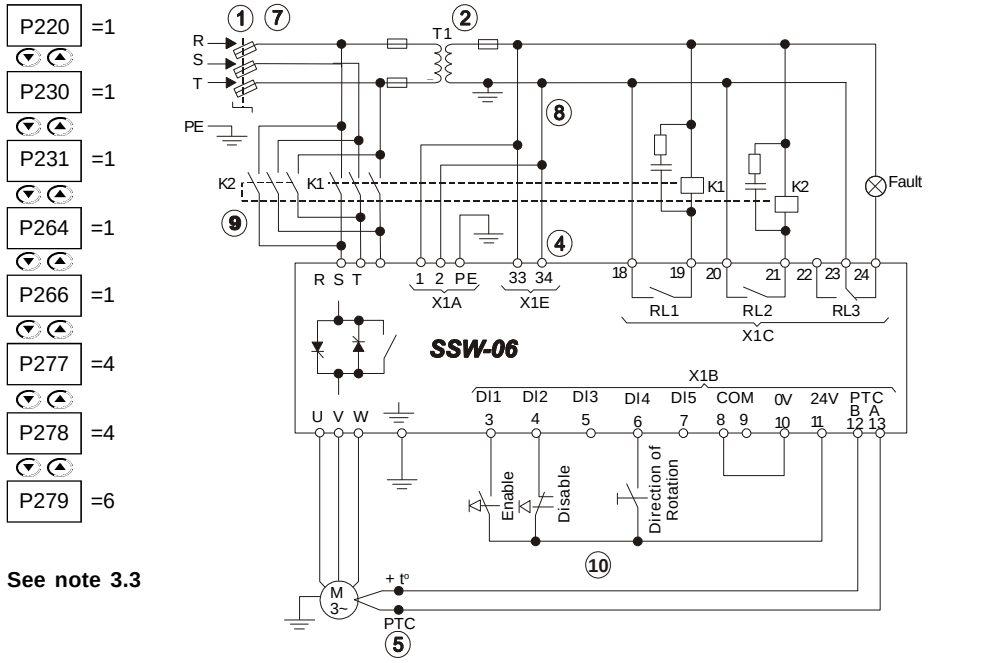

Figure 3.29 - *Recommended Setup with Command via Digital Inputs and direction of rotation.*

3.3.9 Recommended Setup with Command via Digital Inputs and Reverse Braking

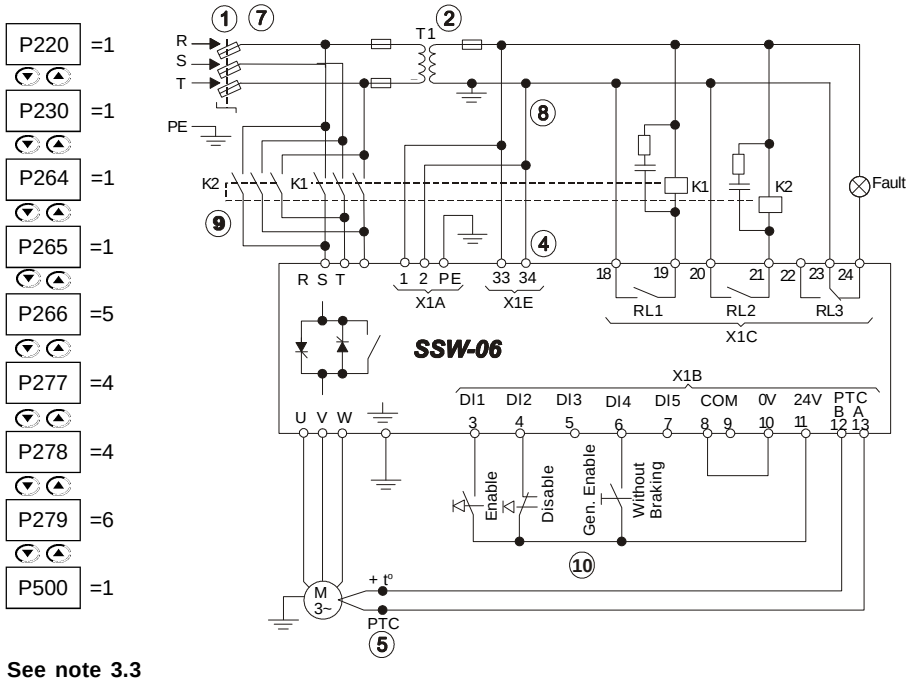

Figure 3.30 - *Recommended Setup with Command via Digital Inputs and Reverse Braking.*

3.3.10 Recommended Setup with Command via Digital Inputs and Optimal Braking

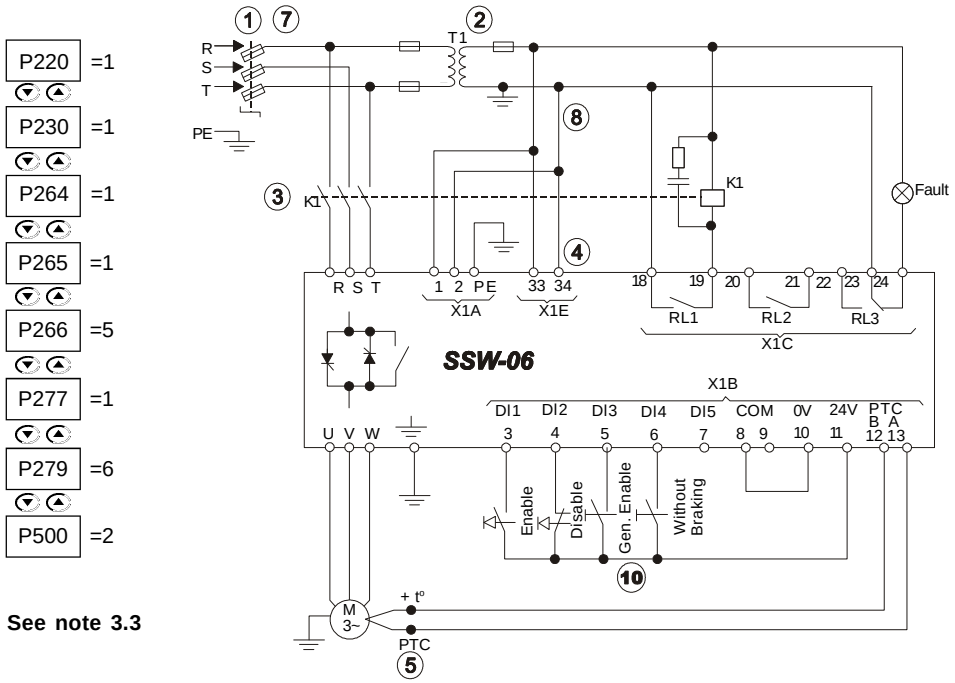

Figure 3.31 - *Recommended Setup with Command via Digital Inputs and Optimal Braking.*

3.3.11 Recommended Setup with Command via Digital Inputs and DC-Braking

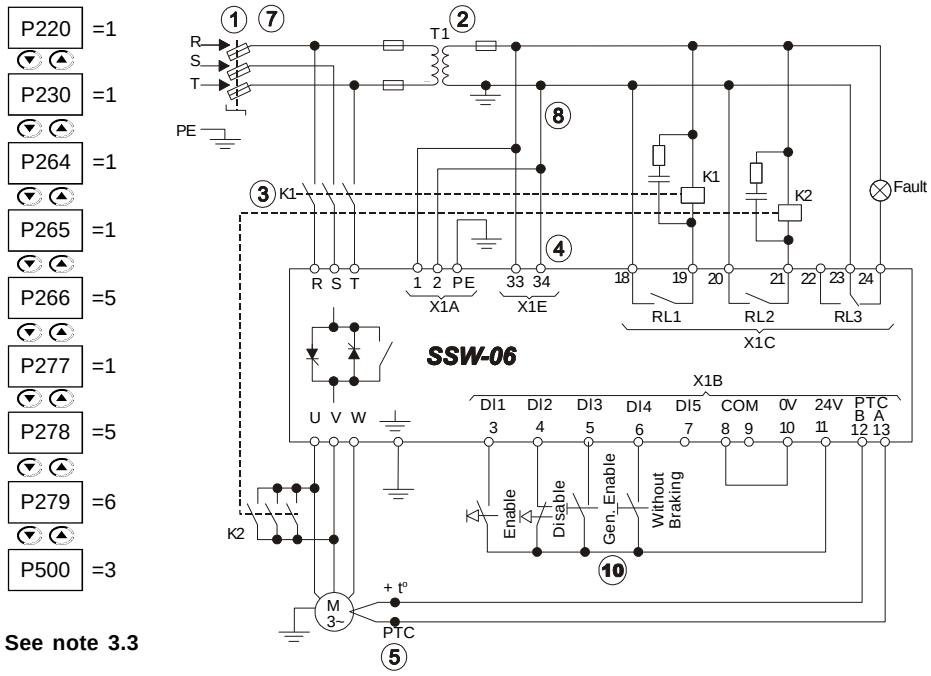

Figure 3.32 - *Recommended Setup with Command via Digital Inputs and DC-Braking.*

3.3.12 Recommended Setup with Command via Digital Inputs and External By-pass Contactor

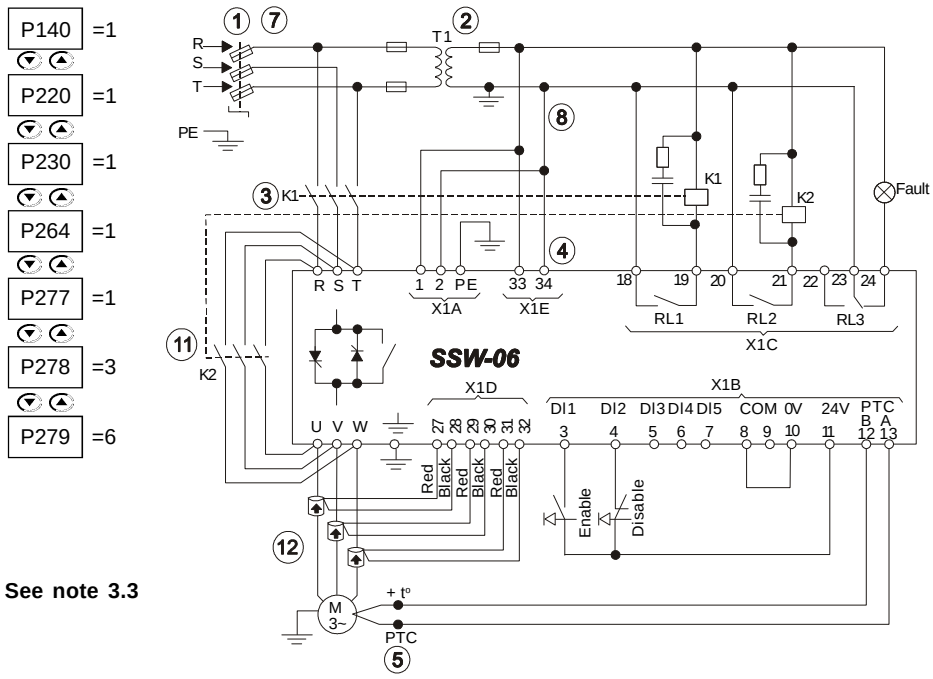

Figure 3.33 - *Recommended Setup with Command via Digital Inputs and External By-pass Contactor.*

3.3.13 Symbols

	Electrical connection between two signal
	Connection Terminals
	Coil - Relay, Contactor
	Normally Open Contact (NO)
	Indicator light
	Circuit-breaker (opens under load)
	Resistor
	Capacitor

	Fuse
	Thyristor/SCR
M 3~	Three-phase Motor
	Emergency Button
	Transformer
	N.O. Contact (with retention)
	Normally Closed (NC) Push-button
	Normally Open (NO) Push-button
	Circuit-breaker with under voltage release

3.4 European Directives for Electromagnetic Compatibility Requirements for installation.

The SSW-06 series Soft-Starters were designed considering all the safety and electromagnetic compatibility aspects.
SSW-06 Soft-Starters do not have any intrinsic function if they are not connected to other components (for example, with a motor). For this reason, the basic product does not have the CE label indicating conformity with the electromagnetic compatibility directive.
The SSW-06 attends all the requirements of the electromagnetic compatibility directive (89/336/EEC), as defined by Product Standard EN60947-4-2 (2000) + A1 (2002) - "*low-voltage switchgear and control-gear part 4.2: Ac Semi-conductor Motor controllers and Starters*" specific standard for drives.
The conformity of all the SSW-06 series is based on tests of some representative models. A Technical Construction File (TCF) was checked and approved by a competent body.

3.4.1 Installation

To install the Soft-Starter(s) in conformity with the EN60947-4-2 standard, it is necessary to attend the following requirements:

1) The cables used for control (inputs and outputs) and signal wiring must be armored or installed in metallic electroducts (conduits) or in metallic channel with equivalent attenuation.
2) It is indispensable to follow the recommendations for earthing presented in this manual.
3) Models 85A to 1400A SSW-06 Soft-Starters are classified for use in "Class A", individual use with no need of external filters or armored power cables.

Description of the conducted emission classes according to Standard EN60947-4-2 (2000) + A1 (2002):

- Class B: residential environment (*first environment*), unrestricted distribution
- Class A: industrial environment (*second environment*), unrestricted distribution.

KEYPAD (HMI) OPERATION

This Chapter describes the operation of the standard Keypad (HMI) of the Soft-Starter SSW-06, providing the following information:
☑ General Keypad (HMI) Description;
☑ Use of the Keypad;
☑ Soft-Starter SSW-06 Parameters organization;
☑ Parameter programming;
☑ Description of the Status Indicators.

4.1 DESCRIPTION OF THE KEYPAD (HMI-SSW06)

The standard Soft-Starter SSW-06 Keypad has one readout displays: a LED readout with a 4 digit, seven-segment display and al LCD display with two lines of 16 alphanumeric characters. There are also 4 indicator LED's and 8 keys.Figure 4.1 shows the front view of the Keypad and indicates the position of the readouts, keys and status LED's.

Functions of the LED Display:
Shows error and messages status (see Parameter, Error and State Message Quick Reference), the parameter number or its context. The unit display (to the right) indicates the unit of the indicated variable.

☑ A → current
☑ U → Voltage
☑ H → frequency
☑ Blank → other parameters

NOTE!
When the indication is equal or higher than 1000 (A or U), the variable unit will not be indicated (ex.: 568.A, 999.A, 1000,1023, etc.)

NOTE!
When the indication is higher than 9999 (in A, for instance), the number corresponding to ten thousand will not be displayed (Ex.: 12345 A will be read as 2345 A).The correct indication will be displayed only on the LCD display.

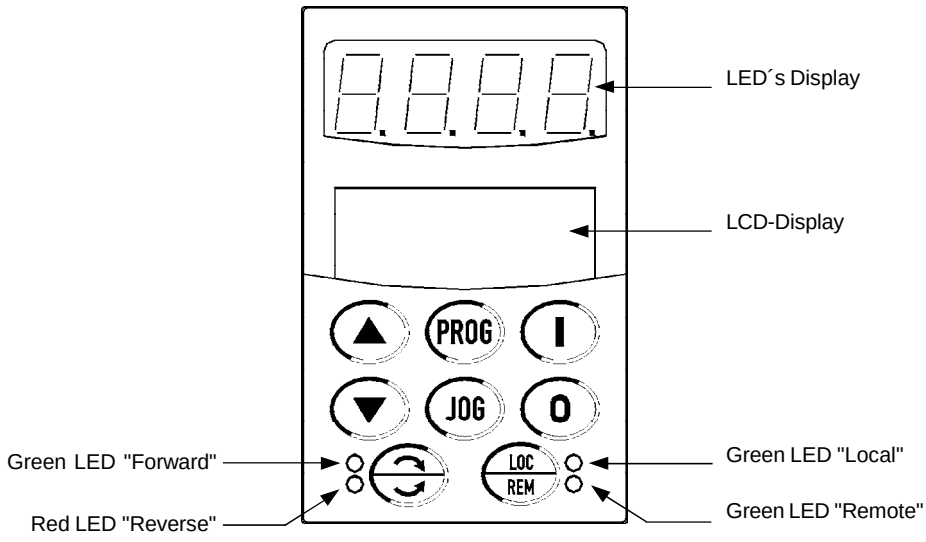

Figure 4.1 - *SSW-06 HMI*

Functions of the LCD Display:
The LCD Display shows the parameter number and its value simultaneously, without the need of pressing the PROG key. It also provides a brief description of each parameter and also the units (A, Hz, V, s, %) when necessary. It also provides a brief description of the fault code and inverter status.

Local and Remote Led Functions:

Soft-Starter in Local Mode:
Green Led on and Red Led Off.

Soft-Starter in Remote Mode:
Green Led Off and Red Led on.

Direction of Rotation (FWD/REV) LED Functions:
Not implemented in this Software Version

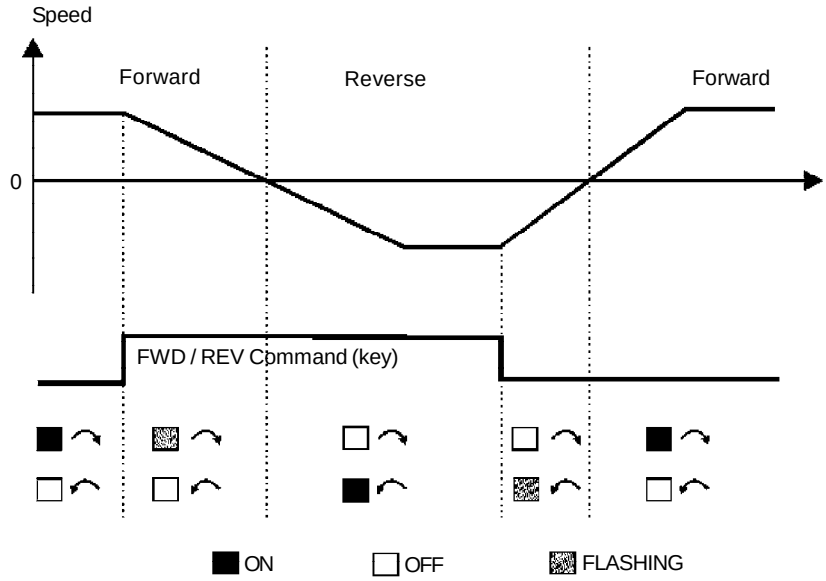

Figure 4.2 *- Direction of Rotation (FWD / REV) LED´s*

Operation of the Man Machine Interface (MMI) keys:

Starts (Enable) the motor (start).

Stops (Disables) the motor (stop).
Also resets the Soft-Starter after a fault has occurred.

Toggles the LED display between the parameter number and its value (position/content).

Increases the number of the parameter or the value of the parameter.

Decreases the number of the parameter or the value of the parameter.

Reverses the direction of motor rotation between Forward/Reverse

Toggles between this LOCAL or REMOTE modes of operation.

Performs the JOG function when pressed. Any DIx programmed for General Enable must be closed (and the SSW-06 must be stopped) to enable JOG function.

4.2 USE OF THE KEYPAD

The keypad is used for programming and operating the Soft-Starter allowing the following functions:

- ☑ Indication of the Soft-Starter SSW-06 status and main operation variables;
- ☑ Fault indications;
- ☑ Viewing and programming of the setable parameters;
- ☑ Soft-Starter SSW-06 operation (via keys I, O and LOC/REM).

4.2.1 Keypad use for Soft-Starter SSW-06 Opertation

All functions relating to the Soft-Starter SSW-06 operation (Start, Stop, Increment, Decrement, JOG- Local/Remote condition) can be performed through the Keypad. All keypad keys are enabled when the Local Mode has been selected. All these functions can be executed individually through digital inputs. For this, all parameters related to these functions and to the corresponding inputs must be programmed.

Operation of the Man Machine Interface (HMI) keys:

When programmed (P220 = 2 or 3), it selects the command source, changing between "Local" and “Remote”.
When programmed (P229 = 0 (key I , O → “ Local” condition) and/or P230 = 0 (key I , O → “Remote condition”).

Starts the motor via Acceleration Ramp. (motor accelerates according to acceleration ramp and load characteristics).

Stops the motor via Deceleration Ramp. (motor decelerates according to deceleration ramp and stops).
It resets the Soft-Starter after a fault trip (always active).

Reverses the motor direction of rotation.
Enabled when P220 = 2 (Keypad LOC), P229 = 0 (HMI Key), Local Mode, P231 = 1 (By Contactor) or P231 = 2 (JOG Only).
Enabled when P220 = 3 (Keypad REM), P230 = 0 (HMI Key), Remote Mode, P231 = 1 (By Contactor) or P231 = 2 (JOG Only).

When P231 = 1 (By Contactor), changes the motor direction of rotation via contactor, if the contactors are connect at the input power supply and P277 = 4 (FWD/REV-K1) and P278 = 4 (FWD/REV-K2).
When P231 = 2 (JOG Only), changes the motor direction of rotation only to the Jog function. Contactors are not required.

Enabled when P510 = 1 (Active).
When the Jog key is pressed, it accelerates the motor to the Jog frequency conform the motor direction of rotation. When the Jog key is released, the motor decelerates and stops.
When the Jog key is pressed, it accelerates the motor to the Jog frequency according to the motor direction of rotation.

The motor must be disabled and the Soft-Starter SSW-06 is with General Enable.

4.2.2 HMI Display - Signaling indications

Parameters P001 to P099 are only Read Parameters. The first parameter to be displayed when the Soft-Starter is powered-up, can be programmed at P205.

P205	Parameter to be displayed first
0	P001 (Motor current %In of the Soft-Starter)
1	P002 (Motor current %In of the Motor)
2	P003 (Motor current)
3	P004 (Line voltage)
4	P005 (Line Frequency)
5	P006 (Soft-Starter Status)
6	P007 (Output Voltage)
7	P008 (Power Factor)

Table 4.1 *- Parameter initially shown in the displays*

Soft-Starter Status:

Soft-Starter is ready to be enabled

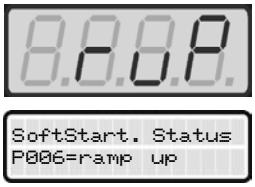

Soft-Starter is operated via acceleration ramp "ramp up"

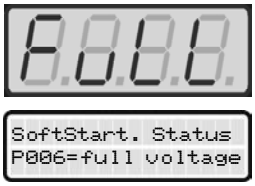

Soft-Starter is operated at "full voltage"

Soft-Starter is operated with enabled By-pass.

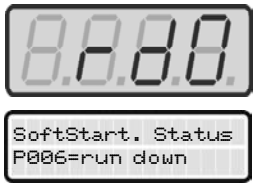

Soft-Starter is operated via deceleration ramp "ramp down"

Soft-Starter with fault

7 Segment Display is flashing:
The display flashes in the following conditions:

- ☑ trying to change a parameter value when it is not allowed;
- ☑ Soft-Starter in Fault condition (Refer to Chapter 7 - Diagnosis and Troubleshooting)

4.2.3 Parameter viewing and programming

All Soft-Starter settings are made through the parameters. The parameters are shown on the display with the letter **P** followed by a number:
Example (P101):

101= Parameter Number

Each parameter is associated to a numerical value (parameter content), that corresponds to an option selected among the options available for this parameters.

The values of the parameters define the Soft-Starter programming or the value of a variable (and.g. current, frequency, voltage). For Soft-Starter programming you should change the parameter(s) content(s).

ACTION	DISPLAY HMI LED DISPLAY HMI LCD	DESCRIPTION
Press the key PROG	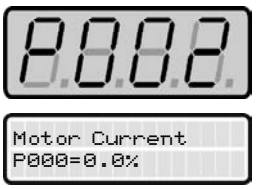	
Use the keys ▲ and ▼		Select the desired parameter

ACTION	DISPLAY HMI LED DISPLAY HMI LCD	DESCRIPTION
Press the key PROG	30 Init. Volt Start P101=30%	Numeric value associated to the parameter [4]
Use the keys ▲ and ▼	35 Init. Volt Start P101=35%	Sets the new desired value. [1] [4]
Press the key PROG	P101 Init. Volt Start P101=35%	[1] [2] [3]

(1) For parameters that can be changed with the motor running, the Soft-Starter will use the new value immediately after it has been set. For the parameters that can be changed only with the motor stopped, the Soft-Starter will use this new set value only after the key PROG is pressed.

(2) By pressing the key PROG after the reprogramming, the new programmed value will be saved automatically and will remain stored until a new value is programmed.

(3) If the last value programmed in the parameter is not functionally compatible with other parameter values already programmed, an E24 - Programming Error - will be displayed. Example of programming error:
Programming two digital inputs (DIx) with the same function. Refer to Table 4.2 for the list of programming errors that will generate an E24 Programming Error.

(4) To allow the reprogramming of any parameter value it is necessary to change parameter P000 to the password value. The factory default password value is 5. Otherwise you can only read the parameter values and not reprogram them.
For more details see P000 description in Chapter 6.

E24 - Programming Error

Two or more parameters between P266 and P268 equal to 1 (LOC/REM)
Two or more parameters between P266 and P268 equal to 2 (LOC/REM)
(P202 = 2 and P520 = 1) if there is pump control with kick start
(P202 = 3 and P520 = 1) if there is torque control with kick start
(P150 = 1 and P500 = 3) if there is DC-Braking with Delta Inside

Table 4.1 - *Incompatibility between Parameters - E24*

START-UP

This Chapter provides the following information:
☑ How to check and prepare the Soft-Starter SSW-06 before power-up;
☑ How to power-up and check for proper operation;
☑ How to operate the Soft-Starter SSW-06 (See Electrical Installation).

5.1 POWER-UP PREPARATION

The Soft-Starter SSW-06 shall be installed according to Chapter 3 - Installation. If the drive project is different from the typical recommended drives, the steps below may also followed.

DANGER!
Disconnect the AC input power before making any connections.

1) **Check all connections:**
Check if the power, grounding and control connections are correct and well tightened.

2) **Clean the inside of the Soft-Starter SSW-06:**
Remove all shipping material from the inside of the Soft-Starter SSW-06 or cabinet.

3) **Checks the correct voltage selection:**
In models 255A to 820A, the fan supply voltage selection is correct. In models 950A to 1400A the single-phase supply voltage must be checked to make sure it is adequate to the voltage of the fans.

4) **Check the motor:**
Check all motor connections and verify if their voltages, currents and frequencies match the Soft-Starter SSW-06 specifications.

5) **Check the Soft-Starter SSW-06 motor connection type:**
Check if the standard three-wire connection should be used or if the Soft-Starter SSW-06 should be connected via inside delta of the motor. For more details, refer to Chapter 3.

6) **Uncouple the load from the motor:**
If the motor cannot be uncoupled, make sure that the direction of rotation (FWD/REV) does cannot cause damage to the machine.

7) **Close the Soft-Starter SSW-06 and/or cabinet cover.**

5.2 INITIAL POWER-UP (required parameter settings)

After the Soft-Starter SSW-06 has been checked, AC power can be applied:

1) Check the supply voltage:
Measure the line voltage and check if it is within the specified range (Rated Voltage - 15% to + 10%).

2) Power-up the Electronics Supply:

NOTE!
Always energize the electronics supply before energizing the power and execute all adjustments/settings described in this item.

3) Check if the power-up has been successful
When the Soft-Starter SSW-06 is powered up for the first time or when the factory default parameter values are loaded (P204 = 5), a start-up routine is run.
This routine requests the user to program some basic parameters to ensure proper Soft-Starter SSW-06 and operation and motor operation.This routine sequence changes according to the selected type of control. For more details about the control type to be selected, refer to Parameter P202 in Chapter 6.
The parameterization sequence for each control type is show in figure 5.1.

ATTENTION!
For correct programming of the protection parameters, please consider the catalog data and the motor nameplate data of the used motor.

To protect the motor against overloads during the start process and at during operation, program the thermal class of the motor. For more details about programming of the Thermal Class, see description of Parameter P640 in Chapter 6.

In this parameter setting sequence only the main parameters for learning about the Soft-Starter SSW-06 operation are shown. Please program all necessary parameters for correct operation of the Soft-Starter and motor protection, before operating it at rated operation conditions.

4) Close the input circuit-braker.

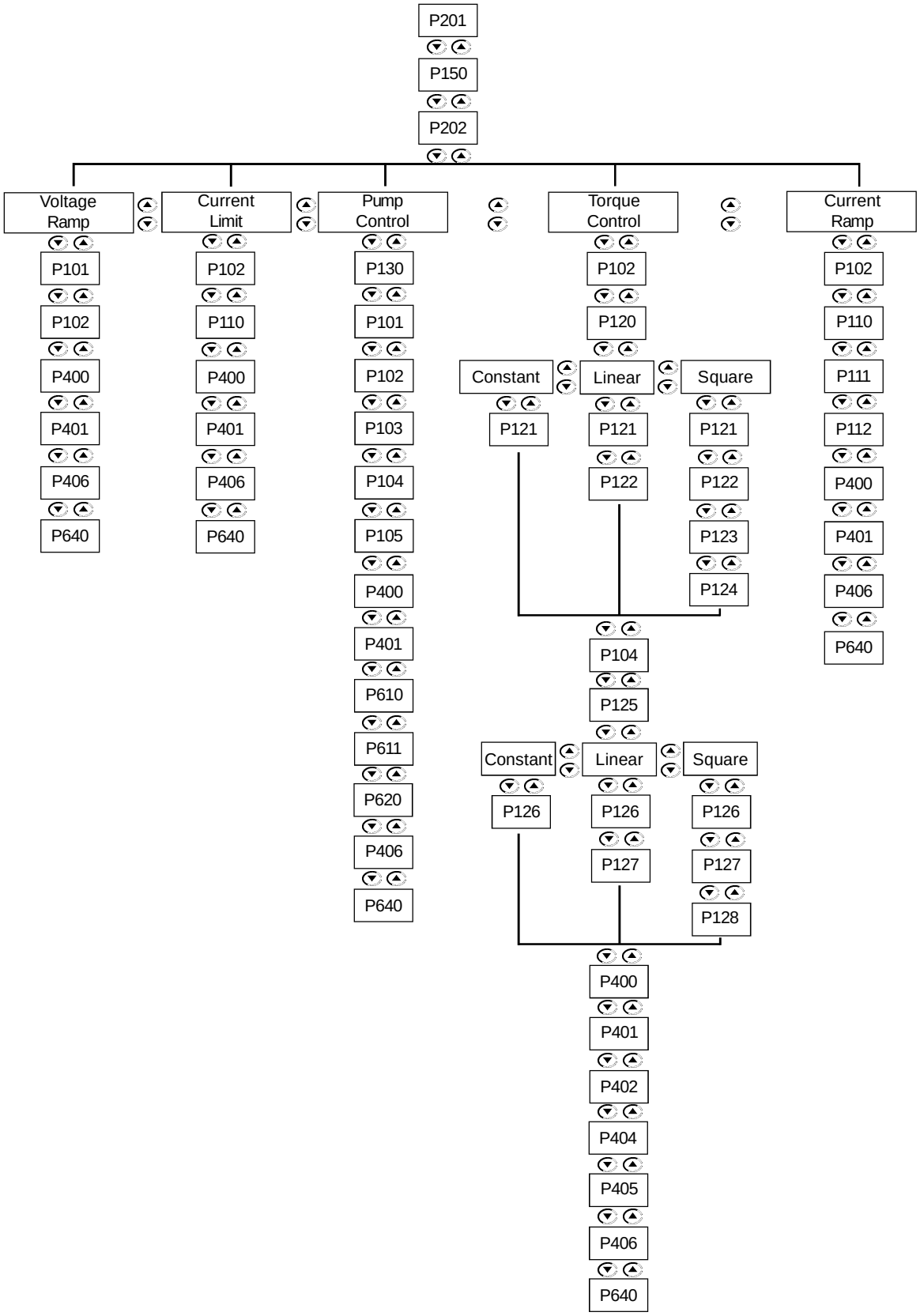

Figure 5.1 – *Parameter sequence during initial power-up*

Shown below is a parameter programming example requested by this routine.

Example:
Soft-Starter SSW-06
SSW060130T2257PSZ
Motor
High Efficiency Plus Three-Phase Electric Motor- 4 Poles - 60Hz
Power: 75 HP
Frame size: 225S/M
Speed: 1770 rpm
Rated current at 380V: 101 A
Service Factor: 1.15
Start mode
Start-up by voltage ramp.

Initial Power-up - Programming via Keypad (HMI) (Based on the example above):

ACTION	HMI LED DISPLAY HMI LCD DISPLAY	DESCRIPTION
After Power-up, the Display shows the following message	P201 Language P201=Port	Language Selection: 0=Portuguese 1=English 2=Spanish 3=German
Press the key PROG to enter the programming mode	0000 Language P201=Port	Enter the programming mode.
Use the keys ▲ and ▼ to select the language	0001 Language P201=English	Selected language; English
Press the key PROG to save the selected option and exit the programming mode	P201 Language P201=English	Exit the programming mode.
Press the key ▲ to go to the next parameter	P150 Delta Inside P150=OFF	Soft-Starter Connection Type to the motor: 0=Inactive = standard 3 wires 1=Active = Delta inside 6 wires
Press the key PROG to enter the programming mode	0000 Delta Inside P150=OFF	Enter the programming mode

ACTION	HMI LED DISPLAY HMI LCD DISPLAY	DESCRIPTION
Use the keys ▲ and ▼ for programming Soft-Starter connection type to motor	0 Delta Inside P150=OFF	Soft-Starter connection type to motor: standard 3 wires (Maintained the already existing value)
Press the key PROG to save the selected option and exit the programming mode	150 Delta Inside P150=OFF	Exit the programming mode
Press the key ▲ to go to the next parameter	P202 Type of Control P202= Volt.Ramp.	Selection of the start control type: 0=Voltage ramp 1=Current Limit 2=Pump Control 3=Torque Control 4=Current Ramp
Press the Key PROG to enter the programming mode	0 Type of Control P20 2= Volt.Ramp.	Enter the programming mode.
Use the keys ▲ and ▼ to select the start control type	0 Type of Control P20 2= Volt.Ramp.	Selected start control type: Voltage ramp (Maintained the already existing value)
Press the key PROG to save the selected option and exit the programming mode	P202 Type of Control P20 2= Volt.Ramp.	Exit the programming mode
Press the key ▲ to go to the next parameter	P101 Init. Volt Start P101=30%	Initial start voltage by voltage ramp: (25 to 90)%Un
Press the key PROG to enter programming mode	30 Init. Volt Start P101=30%	Enter the programming mode.

ACTION	HMI LED DISPLAY HMI LCD DISPLAY	DESCRIPTION
Use the keys ▲ and ▼ to select the initial start voltage	35 Init. Volt Start P101=35%	Initial selected voltage: 35% Un (according to load requirements)
Press the key PROG to save the selected option and exit the programming mode	P101 Init. Volt Start P101=35%	Exit the programming mode
Press the key ▲ to go to the next parameter	P102 Start Time Ramp P102=20s	Voltage Ramp Time: (1 to 999)s
Press the key PROG to enter the programming mode	20 Start Time Ramp P102=20s	Enter the programming mode.
Use the keys ▲ and ▼ to select the ramp time for the start voltage	15 Start Time Ramp P102=15s	Selected ramp time for the start voltage: 15s (according load requirements)
Press the key PROG to save the selected option and exit the programming mode	P102 Start Time Ramp P102=15s	Exit the programming mode
Press the key ▲ to go to the next parameter	P400 Motor Rated Volt P400=380V	Motor rated voltage (Un): (0 to 999)V
Press the key PROG to enter the programming mode	380.0 Motor Rated Volt P400=380V	Enter the programming mode.
Use the keys ▲ and ▼ to select the motor rated voltage	380.0 Motor Rated Volt P400=380V	Selected motor rated voltage: 380V (according to the motor data)

ACTION	HMI LED DISPLAY HMI LCD DISPLAY	DESCRIPTION
Press the key PROG to save the selected option and exit the programming mode	P400 Motor Rated Volt P400=380V	Exit the programming mode
Press the key ▲ to go to the next parameter	P401 Motor Rated Cur. P401=20.0A	Motor Rated current (In): (0 to 1500)A
Press the Key PROG to enter the programming mode	20.0A Motor Rated Cur. P401=20.0A	Enter the programming mode.
Use the keys ▲ and ▼ to select the motor rated current	101A Motor Rated Cur. P401=101.0A	Selected motor rated current: 101A (according to the motor data)
Press the key PROG to save the selected option and exit the programming mode	P401 Motor Rated Cur. P401=101.0A	Exit programming mode
Press the key ▲ to go to the next parameter	P406 Service Factor P406=1.00	Motor Service Factor (F.S.): 0.00 to 1.50
Press the Key PROG to enter the programming mode	1.00 Service Factor P406=1.00	Enter the programming mode.
Use the keys ▲ and ▼ to select the motor Service Factor	1.15 Service Factor P406=1.15	Selected motor Service factor: 1.15 (according to the motor data)
Press the key PROG to save the selected option and exit the programming mode	P406 Service Factor P406=1.15	Exit programming mode

ACTION	HMI LED DISPLAY HMI LCD DISPLAY	DESCRIPTION
Press the key ▲ to go to the next parameter	P640 Ther.Prot.Class P640=Class 30	Thermal motor Protection Class: 0= Inactive 1= Class 5 2= Class 10 4= Class 20 5= Class 25 6= Class 30 7= Class 35 8= Class 40 9= Class 45
Press the key PROG to enter the programming mode	6 Ther.Prot.Class P640=Class 30	Enter the programming mode.
Use the keys ▲ and ▼ to select the thermal motor protection class	6 Ther.Prot.Class P640=Class 30	Thermal motor protection class: 6= Class 30 (According to the motor data)
Press the key PROG to save the selected option and exit the programming mode	P640 Ther.Prot.Class P640=Class 30	Exit the programming mode
Press the key ▲ to go to the next parameter		Soft-Starter is reset
	rdy Soft Starter ready	Soft-Starter is ready for operation

Open the input circuit-breaker to disconnect the Soft-Starter SSW-06.

NOTE!
Repeat the first power-up process:
If you want to repeat the first power-up routine, set parameter P204 = 5 (it loads the factory standard default parameters), then follow the first power-up routine;
The first power-up routine, as decribed above, automatically sets some parameters automatically to the factory default. For more details, refer to Chapter 6.

5.3 START-UP

This Section describes the start-up procedure when operating via the Keypad (HMI). Three types of control will be considered:

Start-up by Voltage Ramp:
The start by voltage ramp is the most used method and its programming and parameter setting is very easy to do. The Soft-Starter SSW-06 applies the voltage to the motor without any feedback of the voltage or current applied to the motor

Start-up by Current Limit:
The maximum current level is maintained during the start-up and it is set according to the application requirements. This programming is very easy.

Start-up by Current Ramp:
The maximum current level is also limited during the start-up, however higher or lower start-up current limits can be set.

Start-up by Pump Control:
Optimized control method, providing the required torque to start/stop hydraulic centrifugal pumps smoothly.

Start-up by Torque Control:
The Soft-Starter SSW-06 is fitted with a torque control algorithm of high performance and is totally flexible to meet any application requirement during the motor start or stop and its coupled load.
The method allows a torque control with 1 setting point, a torque control with 2 setting points and a torque control with 3 setting points.

NOTE!
Every time the content of the Parameter P202 is changed, the Soft-Starter will execute a setting sequence routine according to the selected control type.
For more details, refer to Parameter P202 in Chapter 6 and 7.

The following sequence is valid for Drive 1 (see item 3.3.1). The SSW-06 Soft-Starter must already be installed and the electronics, fans and power must already be energized, according to chapter 3, with the setting sequence of the initial Start-up complete, as described (Item 5.2).

5.3.1 Start -up: Operation via Keypad (HMI) Type of control: Voltage Ramp

ACTION	HMI LED DISPLAY HMI LCD DISPLAY	DESCRIPTION
Power-up the Soft-Starter	rdY Soft Starter ready	Soft-Starter is ready to be operated
Press the key PROG . Press the key ▲ to find P000. Also the key ▼ may be used to find Paramater P000	P000 Parameter Access P000=0	It enable the access for changing parameter. With setting according to Factory Default [P200 = 1 (Password is active)], you must set P000 = 5 for changing the parameter content.
Press the key PROG to enter the programmin mode	0 Parameter Access P000=0	Enter the Programming Mode
Use the Keys ▲ and ▼ to program the Password value	5 Parameter Access P000=5	Password value (Factory Default)
Press the key PROG to save the selected option and exit the programming mode	P000 Parameter Access P000=5	Exit the programming mode
Press the key ▲ to find P202. Also the key ▼ may be used to find Paramater P202	P202 Type of Control P202=Volt. Ramp.	This Parameter defines the Type of Control 0=Voltage Ramp 1=Current Limit 2=Pump Control 3=Torque Control 4=Current Ramp
Press the Key PROG to enter the programming mode	0 Type of Control P202=Volt. Ramp.	Enter the Programming Mode
Use the keys ▲ and ▼ to select the correct value of the Control Type	0 Type of Control P202=Volt. Ramp.	Type of Control selected for the Start-up: Voltage Ramp (maintained the existing value)

ACTION	HMI LED DISPLAY HMI LCD DISPLAY	DESCRIPTION
Press the key PROG to save the selected option and exit the programming mode	P202 Type of Control P202=Volt. Ramp.	Exit the programming mode
Press the key ▼ and maintain it depressed to find P003	P003 Motor Current P003=0A	Motor Current (A)
Press the key PROG	0 Motor Current P003=0A	This is only a Read Parameter
Press the key I	346A Motor Current P003=346A	Motor accelerates and a high value of current is reached.
To Stop press the key	90A Motor Current P003=90A	Then the current decreases down to a value required by the load.
To restart press the key 0	rdy SoftStarter ready	Motor decelerates until stopping by coast to rest. Time to stop depends on load inertia and friction.
	346A Motor Current P003=346A	Motor accelerates and a high value of current is reached.
Press the key I	90A Motor Current P003=90A	Then the current decreases up to a value required by the load.

ACTION	HMI LED DISPLAY HMI LCD DISPLAY	DESCRIPTION
Press the key LOC REM again	rdy SoftStarter ready	Soft-Starter is now controlled via terminals (REMOTE). Motor decelerates till stopping by the load inertia.
LOC REM	rdy SoftStarter ready	Soft-Starter is controlled again via keypad (LOCAL). Motor remains stopped.

NOTES!

Setting hints and suggestions for all types of controls and their uses can be found in Chapter 7.
For start-up through voltage ramp refer to Item 7.1.1.

DETAILED PARAMETER DESCRIPTION

This Chapter describes in detail all Soft-Starter SSW-06 parameters. In order to simplify the explanation, the parameters have been grouped by characteristics and functions:

Read Only Parameters	Variables that can only be viewed on the display but not changed by the user.
Regulation Parameters	Programmable values used by the Soft-Starter SSW-06 functions.
Configuration Parameters	These Parameters define the Soft-Starter SSW-06 characteristics, the functions which to be executed, as well as the input/output functions of the control board.
Motor Parameters	Motor data that are indicated on the motor nameplate.
Special Function Parameters	Here are included the parameters related to special functions.
Protection Parameters	Here are included the parameters related the actuation levels and actuation time of the motor protection

Symbols and definitions used in the text below:

(1) Indicates that the parameter can only be changed when the Soft-Starter SSW-06 is disabled (motor stopped).
(2) Parameters not changed when programmed at Factory Default. (P204=5).

6.1 ACCESS AND READ ONLY PARAMETERS - P000 to P099

Parameter	Range [Factory Setting] Unit	Description / Notes opens
P000 Access Parameter/ Password Value Setting	0 to 999 [0] -	☑ This parameter opens the access to change the parameter values. When values are set according to Factory Default [P200 = 1 (Password is active)] to must set P000 = 5 to change parameter values, i. and. the Password value is equal to 5. To change the password to any other value (password 1), proceed as follows: **(1)** Set P000=5 (current password) and P200= 0 (password inactive). **(2)** Press the key PROG . **(3)** Change P200 to 1 (password active). **(4)** Press the key PROG again: display shows: P000. **(5)** Press the key PROG again: display shows 5 (last password). **(6)** Use the keys ▲ and ▼ to change to the desired password value (password 1). **(7)** Press the key PROG : display shows P000. From this moment on, the new password becomes active. Thus, to change parameter content P000 one must set to the new password. (Password 1).

Parameter	Range [Factory Setting] Unit	Description / Notes
P001 Soft- Starter SSW-06 Current	0 to 999.9 [-] 0.1%	☑ Indicates Soft-Starter SSW-06 output current as percentage of the rated current of the Soft-Starter (%In of the SSW-06) . ☑ Precision of ± 2% for the full scale. (The full scale is 5x In of the SSW-06). ☛ **NOTE!** When the connection is used inside the delta of the motor (P150=1), the indication of the current value will already be multiplied by 1.73.
P002 Motor Current	0 to 999.9 [-] 0.1%	☑ Indicates Soft-Starter SSW-06 Output Current as percentage of the motor rated current (%In of the motor). ☑ Precision of ± 2% for the full scale. (The full scale is 5x In of the SSW-06). ☛ **NOTE!** When the connection is used inside the delta of the motor (P150=1), the indication of the current value will already be multiplied by 1.73.
P003 Motor Current	0 to 9999.9 [-] 0.1A	☑ Indicates the Soft-Starter SSW-06 output current in Ampere (A). ☑ Precision of ± 2% for the full scale. (The full scale is 5x In of the SSW-06). ☛ **NOTE!** When the connection is used inside the delta of the motor (P150=1), the indication of the current value will already be multiplied by 1.73.
P004 Line Voltage	0 to 999 [-] 1V	☑ Indicates the average True rms voltage of the tree input phases in Volts (V). ☑ Accuracy: ± 2V.
P005 Line Frequency	0 to 99 [-] 1Hz	☑ Indicates the line frequency in Hertz (Hz). ☑ Precision of ± 5% of the rated frequency of the supply network. ☛ **NOTE!** Only indicates network frequency when there is a voltage greater than 20V rms in the power supply (R/ 1L1, S/ 3L2 and T/5L3).
P006 Soft-Starter SSW-06 Status	XXXX [-] -	☑ Indicates the actual Soft-Starter SSW-06 status: **0 = "rdy"** Soft-Starter is ready to be enabled; **8 = "Sub"** Soft-Starter under voltage fault; **9 = "Exx"** Soft-Starter fault; **1 = "ruP"** Soft-Starter is enabled according to "ramp up"; **2 = "FuLL"** Soft-Starter is enabled at "full voltage"; **3 = "PASS"** Soft-Starter is enabled with "By-pass"; **6 = "ECO"** Reserved; **4 = "rdo"** Soft-Starter is enabled according to "ramp down"; **5 = "br"** Soft-Starter is enabled according to "braking"; **6 = "rEv"** Soft-Starter is enabled according to "reversing"; **7 = "JOG"** Soft-Starter is enabled according to "jog"; **11 = "dly"** Soft-Starter awaiting the post "delay" stop time; **12 = "G.di"** Soft-Starter with "general disable".

Parameter	Range [Factory Setting] Unit	Description / Notes
P007 Soft-Starter SSW-06 Output Voltage	0 to 999 [-] 1V	☑ Indicates the average True rms voltage of the tree output phases of the Soft-Starter SSW-06 in Volts (V). ☑ Accuracy: ± 2V.
P008 Power Factor	0 to 1.00 [-] -	☑ Indicates motor power factor. ☑ Accuracy: ± 5%. **NOTE!** The motor power factor will only be indicated when the current is at 20% of the rated current of the SSW-06. 0.00 (Zero) will be indicated if the current is below 20% of the SSW-06 rated current.
P009 Motor Torque	0 to 999.9 [-] 0,1%	☑ Indicates the motor torque in percent of the rated motor toque (% Tn of the Motor). ☑ The Soft-Starter SSW-06 is fitted with a software for estimating the motor torque by using the same principles contained in Weg Frequency Inverter ☑ This high technology software enables indicating the motor torque very close to the effective present torque. ☑ Accuracy of ± 10% Tn of the Motor. **ATTENTION!** Information related to the rated torque of the motor and maximum starting torque of the motor can be found in the manufacturer's catalogue. **NOTE!** For the correct torque to be indicated, in P009, all the parameters related to the motor, P400 to P406, must be correctly programmed according to the data informed in the motor name plate.
P010 Ouput Power	0 to 6553.5 [-] 0.1kW	☑ Indicates the active power as average of the three ouput phases of the Soft-Starter SSW-06 in kilo Watts (kW). **NOTE!** The output power will only be indicated when the current is greater than 20% of the SSW-06 rated current. 0 (Zero) Will be indicated if the current is lower than 20% of the SSW-06 rated current.
P011 Apparent Output Power	0 to 6553.5 [-] 0.1kVA	☑ Indicates the apparent power as average of the three ouput phases of the Soft-Starter SSW-06 in kilo Volts Ampere (kVA).

Parameter	Range [Factory Setting] Unit	Description / Notes
P012 Digital Input Status DI1 to DI6	LCD=1,0 LED=0 to 255 [-] -	☑ Indicates on the keypad LCD display the status of the 6 digital inputs of the control board (DI1 to DI6). Number 1 stands for Active and Number 0 for Inactive, in the following order: DI1, DI2,...,DI5, DI6. ☑ The LED Display shows a decimal value corresponding to the status of the 6 digital inputs, where the status of each bit is considered one bit in the specified sequence: Inactive=0 Active=1 DI1 status is the most significant bit. Example: DI1 = Active (+24V); DI4 = Active (+24V); DI2 = Inactive (0V); DI5 = Inactive (0V); DI3 = Inactive (0V); DI6 = Inactive (0V). It is equivalent to the bit sequence: 10010000 Which corresponds to the decimal number 144. The least significant bits are not displayed. The keypad displays will be as follows: 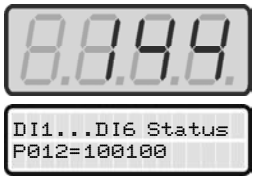
P013 Digital Outputs RL1 to RL3 Status	LCD=1,0 LED=0 to 255 [-] -	☑ Indicates on the keypad LCD display the status of the 3 relay outputs of the control board. Number 1 stands for Active and 0 for Inactive, in the following order: RL1, RL2, RL3. ☑ The keypad LED display shows the decimal value that corresponds to the status of the 3 digital outputs, where the status of each bit is considered one bit in the specified sequence: Inactive=0 Active=1 RL1 status is the most significant bit. The 5 least significant bits are always ‘0’. Example: RL1=Active; RL2=Inactive; RL3=Active This is equivalent to the binary sequence: 10100000 Which corresponds to the decimal number 160. The least significant bits are not displayed. The Keypad displays will be: 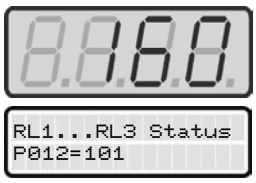

Parameter	Range [Factory Setting] Unit	Description / Notes
P014 Last Fault **P015** Second Previous Fault **P016** Third Previous Fault **P017** Fourth Previous Fault	03 to 77 [-] - 03 to 77 [-] - 03 to 77 [-] - 03 to 77 [-] -	☑ Indicate the code of the last, second, third and fourth previous Faults. ☑ Fault Sequence: Exy → P014 → P015 → P016 → P017
P023 Software Version	XXX [-] -	☑ Indicates the Software Version contained in the microcontroller memory of the control board.
P030 Current of Phase R **P031** Current of Phase S **P032** Current of Phase T	0 to 9999.9 [-] 0.1A 0 to 9999.9 [-] 0.1A 0 to 9999.9 [-] 0.1A	☑ Accuracy: ± 2% for full scale (full scale is 5 x In of the SSW-06). ☛ **NOTE!** When the connection is used inside the delta of the motor (P150=1), the indication of the current value will already be multiplied by 1.73.
P033 Line Voltage - R-S **P034** Line Voltage - S-T **P035** Line Voltage - T-R	0 to 999 [-] 1V 0 to 999 [-] 1V 0 to 999 [-] 1V	☑ Accuracy: ± 2V. ☛ **NOTE!** The voltage will only be indicated when it reaches a value greater than 15V. Below this value, only 0.00 (zero) will be indicated.
P042 Time Powered	LCD: 0 to 65530 LED: 0 to 6553h (x10) [-] 1h	☑ Indicates the total number of hours that the Soft-Starter was powered. ☑ The LED Display shows the total number of hours that the Soft-Starter was energized divided by 10. ☑ This value remains stored even when the Soft-Starter is switched OFF. Example: Indication of 22 hours powered. 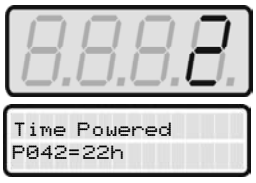

Parameter	Range [Factory Setting] Unit	Description / Notes
P043 Time Enabled	0 to 6553 [-] 0.1 (<999.9) 1 (<6553)	☑ Indicates the total number of hours that the Soft-Starter has **run**. ☑ This value remains stored even when the Soft-Starter is turned OFF. ☑ Indicates up to 6553 hours, rolls over to 0000. ☑ If P204 is set to 3, P043 is reset to zero.
P050 Motor Thermal Protection Status	0 to 250 [-] 1%	☑ Indication of the state of motor thermal protection in a scale of 0% to 250%. Being 250 the thermal protection functioning point of the motor, indicating an error. ☑ The value indicated in this parameter depends on the motor working condition and how long it has been in this condition, for example: stopped, starting or in full operation. ☑ The thermal class selected and the rated power of the motor also influence in this parameter. ☑ Only a value of approximately 160 can be read if the motor is operating in full load for over 2 hours with a current equal to the rated current plus the service factor (In x F.S. @ 2h).
P085 Status of the Fieldbus Communication Board	0 to 3 [-] -	P085 / Description 0 – Off 1 – Board inactive 2 – Board active and Offline 3 – Board active and Online ***Table 6.1** - Fieldbus communication board status* ☑ Indicates the status of the Fieldbus communication board. ☑ Standard is disabled when board is not inserted. ☑ For more details, refer to the Fieldbus Manual for the Soft-Starter SSW-06.

6.2 REGULATION PARAMETERS - P100 to P199

P101 Initial Voltage	25 to 90 [30] 1% Un of the Motor	☑ Used in the control by Voltage Ramp and Pump Controls, P202=0 or 2. ☑ Sets the initial value of the rated voltage (%Un) that will be applied to the motor according to Figure 6.1. ☑ For more details about the programming and use, see Voltage Ramp and Pump Control in P202. ☑ The initial voltage is 0.5s after the Soft-Starter SSW-06 receives the command to start the motor. This is the waiting time for the network isolation contactor to start the power supply. 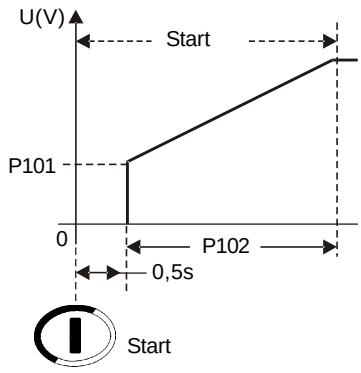 ***Figure 6.1** – Initial time for motor start*

Parameter	Range [Factory Setting] Unit	Description / Notes
		NOTE! When another control type is selected, not the Voltage Ramp or Pump Control, the initial voltage will be attenuated due to the limit imposed by the current.
P102 Acceleration Ramp Time	1 to 999 [20] 1s	☑ When the Soft-Starter SSW-06 has been programmed to Voltage Ramp Control or Pump Control, this will be the ramp time of the voltage increment as shown in Figure 6.2.

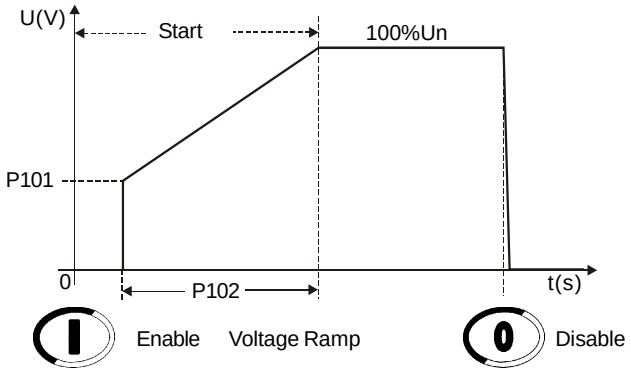

Figure 6.2 – *Acceleration ramp by Voltage Ramp*

☑ When the Soft-Starter SSW-06 has been programmed to Current Limit control, Torque Control or Current Ramp, this time acts as maximum starting time, as a protection against locked rotor.

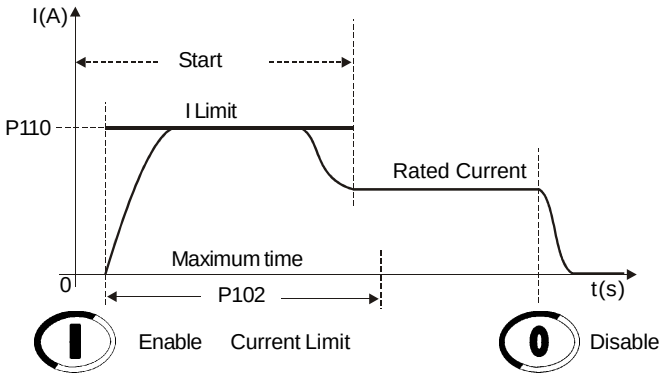

Figure 6.3 – *Acceleration Ramp by Current Limit*

NOTE!
The time set at P102 is not the exact motor acceleration time, but the voltage ramp time or the maximum start time. The motor acceleration time will depend on the motor and the load characteristics.

Parameter	Range [Factory Setting] Unit	Description / Notes
P103 Voltage Step during Deceleration	99 to 60 [100=Inactive] 1% Un of the Motor	☑ Used in applications with hydraulic pumps. ☑ Set the rated voltage (%Un), which will be applied to the motor instantaneously when the Soft-Starter SSW-06 receives the ramp deceleration command. ☑ For more details about programming and use, refer to Pump Control at P202. **NOTE!** To enable this function, you must set a deceleration ramp time.
P104 Deceleration Ramp Time	1 to 299 [0=Inactive] 1s	☑ Used in hydraulic pump applications. ☑ Enables and sets the time of the voltage decrement ramp. ☑ For more details about programming and use, refer to Pump Control. ☑ It can be used as Voltage Ramp control, Pump Control, Current Limit and Current Ramp. **NOTE!** This function is used to lengthen the normal deceleration time of a load and not to force a shorter time than that imposed by the load.
P105 End Deceleration Voltage	30 to 55 [30] -	☑ Used in hydraulic pump applications. ☑ Sets the rated voltage (%Un), which will be applied to the motor at the end of the deceleration ramp. ☑ For more details about the programming and use, refer to Pump Control. 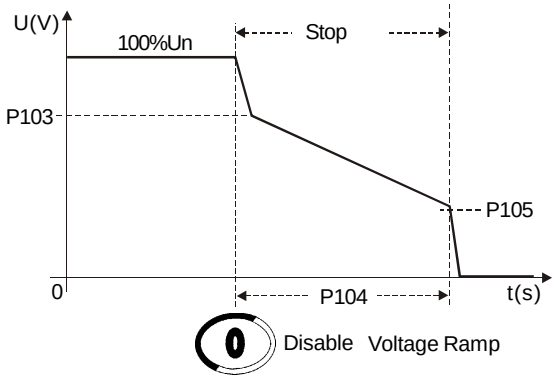 ***Figure 6.4 –*** *Deceleration Ramp by voltage decrement*
P110 Current Limit	150 to 500 [300%] 1% In of the Motor	☑ Defines the current limit during the motor start as a percentage of the rated motor current set at P401. ☑ When the current limit is reached during the motor start, the Soft-Starter SSW-06 will maintain the current at this limit until the motor reaches the end of the start. ☑ When the current limit is not reached, the motor will start immediately. ☑ For more information about selection of the Current Limit control, refer to P202.

Parameter	Range [Factory Setting] Unit	Description / Notes
		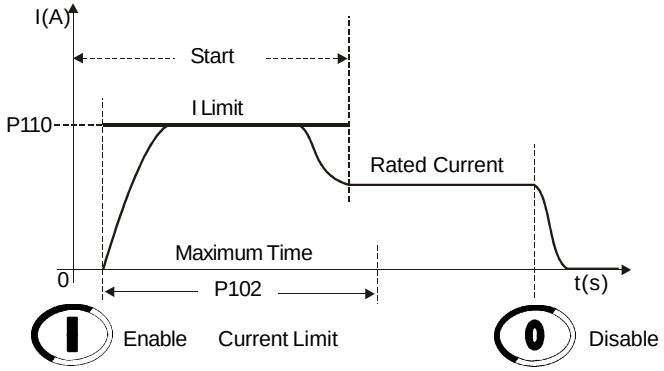 ***Figure 6.5 –*** *Fixed starting Current Limit*
P111 Initial Current by Current Ramp	150 to 500 [150] 1% Un of the Motor	☑ Used for the control by Current Ramp, P202=4. ☑ Allows a current limit ramp to be programmed to help in the starting of loads that have a lower or higher starting torque. ☑ The initial value of the current limit is shown by P111, the final value is shown by P110 and the time is shown by P112, according to figure 6.6.
P112 Time for Current Ramp	1 to 99 [20] 1% of P102	☑ Used for the control by Current Ramp, P202=4. ☑ It enables programming the time, in percent of P102, for the end Current Ramp. ☑ After the time, programmed at P112, has elapsed, it starts operation by Current Limit, given by P110. a) 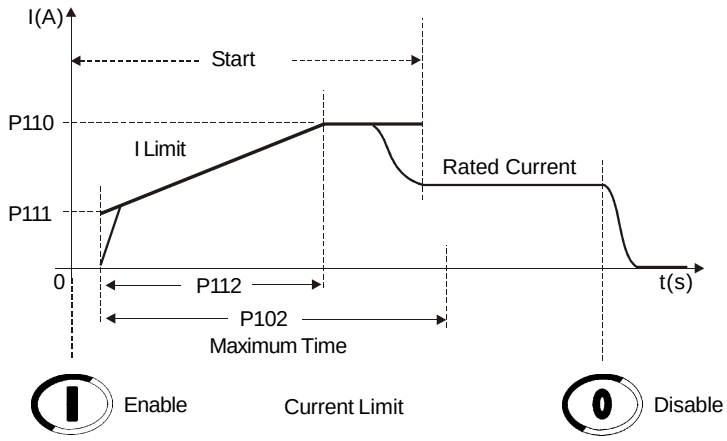

Parameter	Range [Factory Setting] Unit	Description / Notes

b)

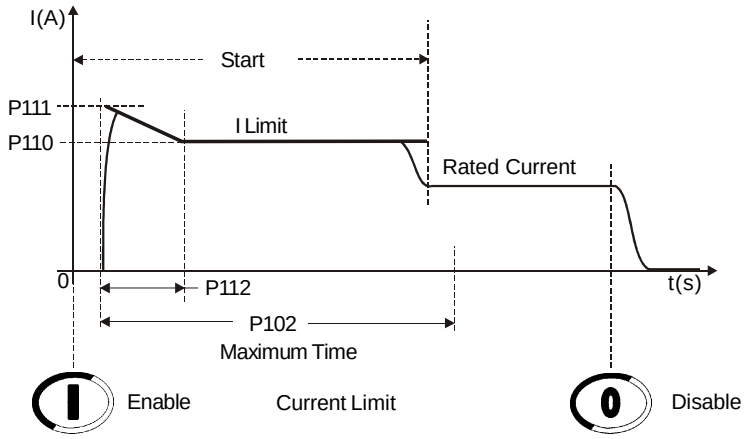

Figure 6.6 a) and b) - *Current Limit by Current Ramp during Starting*

P120 (1)
Starting Torque Characteristics

1 to 3
[1=Constant]
-

P120	Starting Torque Profile
1	Constant (1 setting point)
2	Linear (2 setting points)
3	Quadratic (3 setting points)

Table 6.2 *- Starting Torque Profile*

☑ It enables choosing which torque limit profile the Soft-Starter SSW-06 will supply to the motor during the start.

☑ Three different types of Torque Limit Profile are available allowing the start of any type of load: constant or 1 point, linear or 2 points and quadratic or 3 points.

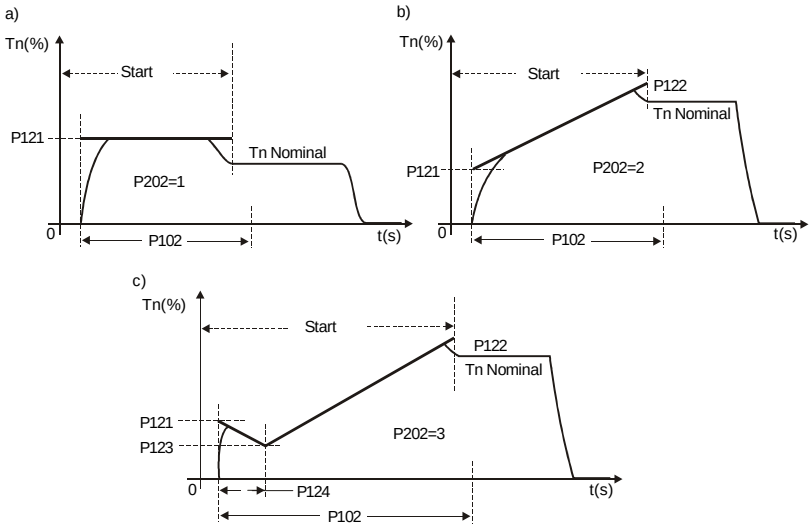

Figure 6.7 a) to c) - *Available Torque Profile during the start*

Parameter	Range [Factory Setting] Unit	Description / Notes
		NOTE! Choose the type of torque control, easier to program and set, according to the knowledge about the characteristics of the load.
P121 Initial Starting Torque	10 to 400 [30] 1% Tn of the Motor	☑ Enables programming an initial torque limit or a constant during the start, according to the torque type selected at P120.

P120	Action
1 (Constant)	P121 limits the maximum torque during the start.
2 (Linear)	P121 limits the initial torque during the start.
3 (Quadratic)	P121 limits the initial torque during the start.

Table 6.3 *- Function of P121 according to P120*

☑ For more details about programming and application, refer to Torque Control at P202.

P122 End Satrting Torque — 10 to 400 [110] 1% Tn of the Motor

☑ It enables programming an end torque limit for the start, when a linear or quadratic torque linear has been selected at P120.

P122	Action
1 (Constant)	P122 Not used
2 (Linear)	P122 limits the end torque during the start.
3 (Quadratic)	P122 limits the end torque during the start.

Table 6.4 *- Function of P122 according to P120*

☑ For more details about programming and application, refer to Torque Control at P202.

P123 Minimum Starting Torque — 10 to 400 [27] 1% Tn of the Motor

☑ It enables programming an intermediate torque limit during the start, when a quadratic torque ha been selected at P120.

P123	Action
1 (Constant)	P123 not used
2 (Linear)	P123 not used
3 (Quadratic)	P123 limits the intermediate torque during the start.

Table 6.5 *- Function of P123 according to P120*

☑ For more details about programming and application, refer to Torque Control at P202.

P124 Time for Minimum Starting Torque — 1 to 99 [20] 1% of P102

☑ It enables programming the time for the intermediate torque limit during the start, as a percentage of the maximum time programmed at P102, when a quadratic torque has been set at P120.

P124	Action
1 (Constant)	P124 not used
2 (Linear)	P124 not used
3 (Quadratic)	P124 time for the intermediate torque limit during the start.

Table 6.6 *- Function of P124 according to P120*

☑ For more details about programming and application, refer to Torque Control at P202.

Parameter	Range [Factory Setting] Unit	Description / Notes

P125 [(1)]
Stopping Torque Characteristics

1 to 3
[1=constant]
-

P125	Stop torque profile
1	Constant (1 set point)
2	Linear (2 set points)
3	Quadratic (3 set points)

Table 6.7 *- Stop Torque Characteristics*

☑ Here you can choose the torque limit profile that the Soft-Starter SSW-06 shall supply to the motor during the start.

☑ Three different types of torque profiles are available that permit improving the speed performance during the start process.

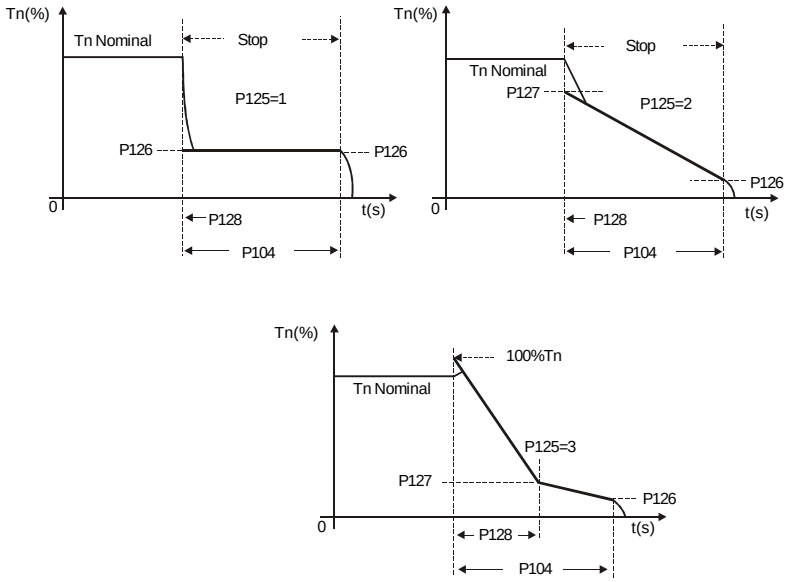

Figure 6.8 – *Available torque profiles for the stop process*

NOTE!
Choose the type of torque control, easier to program and set, according to the knowledge about the characteristics of the load.

P126
End Torque for the Stop

10 to 100
[20]
1% Tn of the Motor

☑ Here you can program the end torque limit or constant for the stop, according to the torque type selected at P125.

P126	Action
1 (Constant)	P126 limits the maximum torque during the stop proces
2 (Linear)	P126 limits the end torque during the stop process
3 (Quadratic)	P126 limits the end torque during the stop process

Table 6.8 *- Function of P126 according to P125*

☑ For more details about programming and application, refer to Torque Control at P202.

Parameter	Range [Factory Setting] Unit	Description / Notes
P127 Minimum Stop Torque	10 to 100 [50] 1% Tn of the Motor	☑ Here you can program the initial torque limit or an intermediate torque limit for the stop, when a linear torque or a quadratic torque has been selected at P125.

P127	Action
1 (Constant)	P127 not used
2 (Linear)	P127 limits the torque when the motor is stopped
3 (Quadratic)	P127 limits the intermediate torque for the stop

Table 6.9 *– Function of P127 according to P125*

☑ For more details about programming and application, refer to Torque Control at P202.

P128 Time for Minimum Stop Torque.	1 to 99 [50] 1% of P104	☑ Here you can program the time for the intermediate stop torque, as percent of the maximum time programmed at P104, when the quadratic torque has been selected at P125.

P128	Action
1 (Constant)	P128 not used
2 (Linear)	P128 not used (time equal to 0)
3 (Quadratic)	P128 time for the intermediate torque limit for the stop process.

Table 6.10 *– Function of P128 according to P125*

☑ For more details about programming and application, refer to Torque Control at P202.

P130 (1) Pump Control	0 [0=Pump] -	☑ This parameter is reserved for future software versions with hydraulic pump control type. The current version has been developed for the control of centrifugal hydraulic pump, considering quadratic motor loads. ☑ For more details about the Pump Control, see P202.

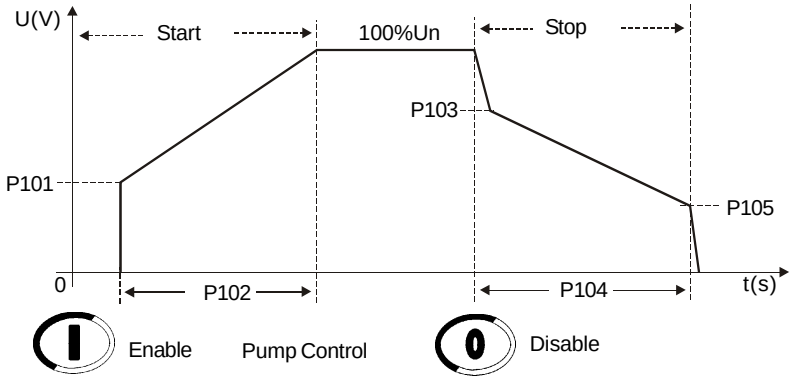

Figure 6.9 *– Start and Stop by Pump Control*

P140 (1) External By-pass Contactor	0 or 1 [0=Inactive] -	

P140	Action
0 (Inactive)	Without external By-pass contactor
1 (Active)	With external By-pass contactor

Table 6.11 *- External By-pass contactor*

☑ This function is enabled when the installation of an external By-pass contactor is required that must be connected parallel to Soft-Starter SSW-06.

Parameter	Range [Factory Setting] Unit	Description / Notes
		☑ The models of models from 85A to 820A have an internal By-pass contactor. ☑ The models of models from 950A to 1400A do not have an internal By-pass contactor. ☑ When P140=1 in the models with an internal By-pass, the internal By-pass will not enable. ☑ The external By-pass contactor is used: 1) (Models without internal By-pass) for possibility one external By-pass contactor; 2) (Models with internal By-pass) for instance when a direct start is required in case of an emergency. The internal By-pass contactors do not permit a direct start. These contactors can be enabled only after the motor start has been realized by the thyristors; 3) (Models with internal By-pass) if the motor stalls frequently at By-pass condition. **NOTE!** See the recommended setup at items 3.3 and 3.3.12 for more Information.
P150 (1)(2) Inside Delta Motor Connection	0 or 1 [0=Inactive] -	

P150	Action
0 (Inactive)	Soft-Starter SSW-06 with standard motor connection
1 (Active)	Soft-Starter SSW-06 inside delta motor connection

Table 6.12 *- Motor connection type*

☑ SSW-06 offers two operation modes: Standard Connection or connection inside the Motor Delta Connection.
☑ When a Standard Connection is used, the motor is connected in series to the Soft-Starter SSW-06 through three cables.
☑ When an Inside Delta Connection is used, the Soft-Starter SSW-06 is connected separately in each winding through six cables. (See item 3.2.5.2). In this type of connection, the current that flows through of the Soft-Starter SSW-06 is only the current of the inside delta motor connection, in other words, 58% of the rated motor current. This characteristic changes the relation between the Soft-Starter SSW-06 nominal currents and those of the motor. In this connection, the Soft-Starter can be used with its rated current dimensioned in the following way:

- 1.5 times the rated motor current during start;
- 1.73 times the rated motor current during full voltage.

During the start, the relation is lower due to the characteristics that are common to this type of connection (inside delta) the Thyristors of the Soft-Starter need to lead the same current in a lower time period, increasing with this the losses in the Thyristor during the start.
☑ The standard connection requires less output wiring. The Inside Delta Motor Connection requires double wiring, but for short distances, this will be a cheaper option for the Soft-Starter + motor + wiring set.

ATTENTION!
Do not operate the motor when P150 has not been programmed correctly. Soft-Starter SSW-06 can be seriously damaged when this parameter has not been programmed correctly.

6.3 CONFIGURATION PARAMETERS - P200 to P299

Parameter	Range [Factory Setting] Unit	Description / Notes
P200 Password	0 or 1 [1] -	

P200	Action
0 (inactive)	This Parameter allows parameter content changing, independent of P000
1 (Active)	Change of Parameter content is only possible, when P000 is equal to the password value

***Table 6.13** - Password*

☑ With the Factory Setting, the password will be P000=5.
☑ To change the Password, see P000.

P201 (2)
Language Selection

0 to 3
[1=English]
-

P201	Description
0	Portuguese
1	English
2	Espanish
3	German

***Table 6.14** - Language selection*

P202 (1)
Type of Control

0 to 4
[0=Voltage Ramp]
-

P202	Type of Control
0	Voltage Ramp
1	Current Limit
2	Pump Control
3	Torque Control
4	Current Ramp

***Table 6.15 -** Types of control*

☑ Soft-Starter SSW-06 has five starting control types to better match all application requirements.

Start by Voltage Ramp (1):
The start by Voltage Ramp is the most used starting method. Its programming and setting is very easy. The Soft-Starter SSW-06 applies the voltage to the motor without voltage or current feedback. This method is used for loads with lower initial torque or quadratic torque.
This type of control can be used as initial operating test.

Start by Current Limit (2):
The maximum current level is maintained during the start and is set according to the application requirements. Its programming and setting is very easy.
This method is used for loads with higher initial torque or constant torque.
This type of control is used for matching the start process to the limits of the power supply capacity.

Start by Current Ramp (3):
The maximum current level is limited during the start process, however higher or lower current limits can be set during the start beginning.

Parameter	Range [Factory Setting] Unit	Description / Notes
		It can substitute the kick-start functions for loads with higher initial torques. This type of control is used for loads with lower or higher initial torques. This type of control is used to match the start process to the limits of the power supply capacity. **Start by Pump Control (4):** This type of control provides the required torque for starting and stopping hydraulic centrifugal pumps smoothly. It has a special algorithm for application in centrifugal pumps, where loads with quadratic torques are present. This special algorithm aims at to minimize pressure "overshoots" in the hydraulic piping, which can result in breakdown or excessive pump wearing. **Start by Torque Control:** The SSW-06 Soft-Starter has a high performance and totally flexible torque control algorithm to meet the needs of any application, for smoothly starting or stopping the motor and its load. **Torque Control with 1 setting point (2):** This type of control allows a constant starting torque limitation. **Torque Control with 2 setting points (3):** This type of control allows the starting torque limitation through linear ramp. **Torque Control with 3 setting points (4):** This type of control allows the setting of the starting torque limitation at three different points: initial, intermediate and final. It also allows the start of quadratic loads, among others. **(1)** Very easy to set and program **(2)** Easy to set and program **(3)** Set and program, requires knowledge of the load to set and program **(4)** Set and program, requires extensive knowledge of the load to set and program **NOTES!** 1) These types of controls are arranged according to the use and programming difficulty level. Thus, we recommend starting with the easier control modes first. 2) Every time the content of P202 is changed, the Soft-Starter will start a sequence routine of minimum settings for each selected type of control. You must run and set all parameters of this sequence (up to the last) when required. Only after all settings have been made can you start the motor.

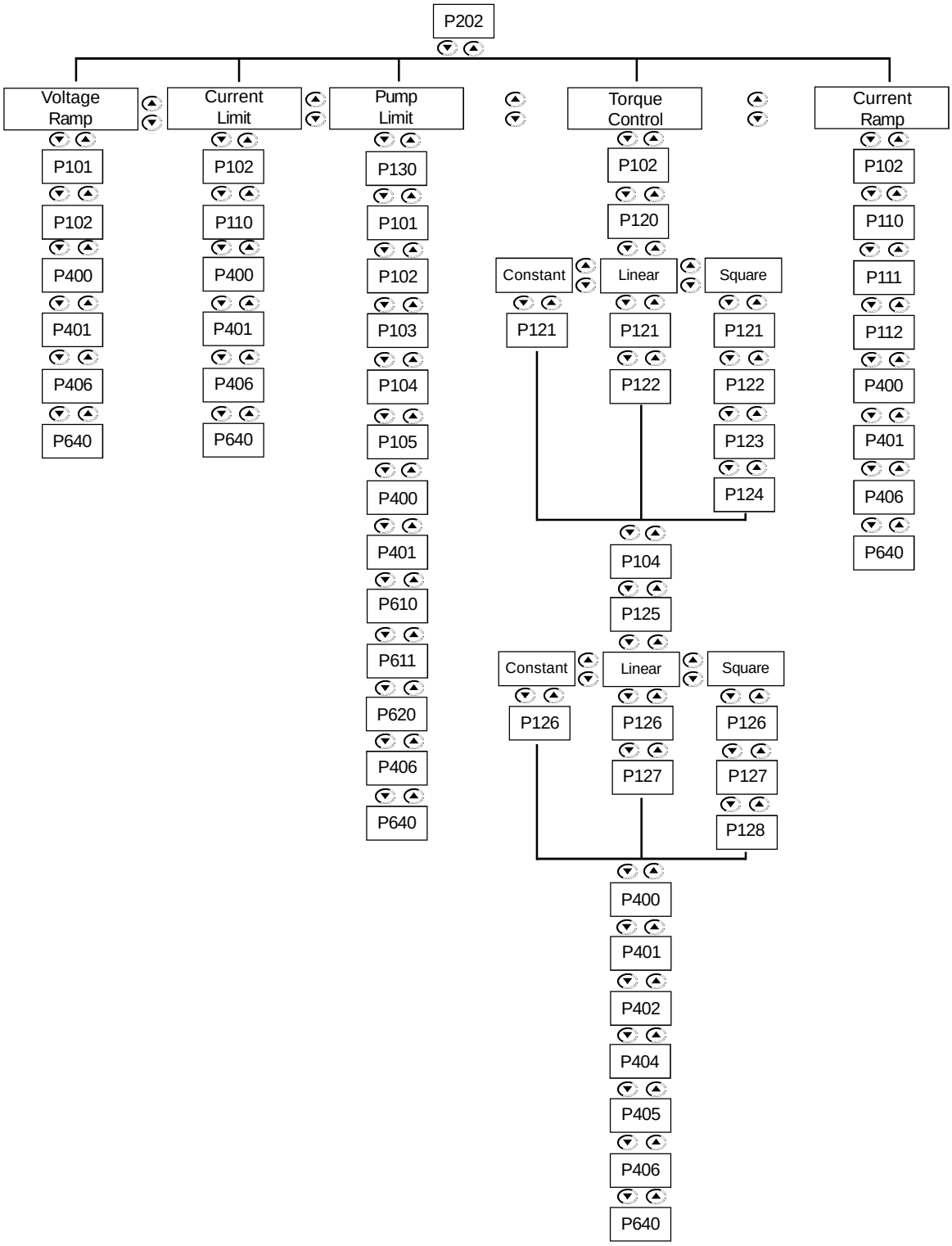

Figure 6.10 *– Parameter sequence according to the selected type of control*

Parameter	Range [Factory Setting] Unit	Description / Notes

☑ The table below shows the relation between the adopted starting control type and the automatically selected stop control type.

START \ STOP	Voltage Ramp	Current Limit	Current Ramp	Pump Control	Torque Control
Voltage Ramp	X				
Current Limit	X				
Current Ramp	X				
Pump Control				X	
Torque Control					X

Table 6.16 – *Stop/Start Operation*

P204 (1)
Load/Save Parameter

0 to 11
[0]
-

☑ Parameters with note (2) indicated are not changed when Factory Settings are loaded through P204 = 5.

☑ To load User Parameter 1 (P204=7) and/or User 2 (P204=8) in the operation area of Soft-Starter SSW-06, it is necessary for User Memory 1 and/or User Memory 2 to be been saved previously (P204=10 and/or P204=11).

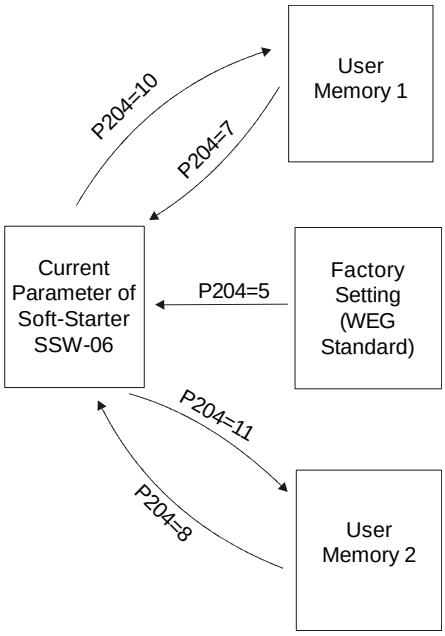

Figure 6.11 *- Parameter Transfer*

Parameter	Range [Factory Setting] Unit	Description / Notes

P204	Action
0, 1, 2, 4, 6, 9	**Not used:** No action
3	**Reset P043:** Resets Running Time
5	**Loads Factory Default:** Loads current Soft-Starter parameter with factory setting
7	**Loads User 1:** Loads current Soft-Starter parameter with the values stored in Memory 1.
8	**Loads User 2:** Loads current Soft-Starter parameter with the values stored in Memory 2.
10	**Save User 1:** Transfer the current parameter contents of the Soft-Starter to memory 1
11	**Save User 2:** Transfer the current parameter contents of the Soft-Starter to memory 2

Table 6.17 *- Action of loading/saving parameters*

NOTE!
Parameter loading/saving will be executed only after parameter setting and after the key PROG has been pressed .

P205
Display Default Selection

0 to 7
[2]
-

☑ This Parameter selects which parameter listed below will be displayed after the Soft-Starter has been powered-up:

P205	Status
1	P001 (Motor current % In of the Soft-Starter)
2	P002 (Motor current % In of the Motor)
3	P003 (Motor current (A))
4	P004 (Supply Line Voltage)
5	P005 (Supply Line Frequency)
6	P006 (Soft-Starter Status)
7	P007 (Output Voltage)

Table 6.18 *- Options displays default*

P206
Auto-Reset Time

0 to 600
[0=Inactive]
1s

☑ In the event of a fault trip, except for E10, E15, E24, E28, E29, E30, E31, E41, E62, E63, E67, E70, E71, E72, E75, E76 and E77, the Soft-Starter SSW-06 can initiate an automatic reset after the time given by P206 is elapsed.
☑ If P206 ≤ 2 Auto-Reset does not occur.
☑ If after Auto-Reset the same fault is repeated three times consecutively, the Auto-Reset function will be disabled. A fault is considered consecutive if it happens again within 30 seconds after Auto-Reset.
☑ Thus if an error occurs four times consecutively, it will be displayed permanently (and the Soft-Starter will be disabled).

Parameter	Range [Factory Setting] Unit	Description / Notes
P215 (1) Copy Function (HMI)	0 to 2 [0=Off] -	☑ The copy function is used to transfer the content of the parameters from one Soft-Starter SSW-06 to another. The Soft-Starters must be of the same type (voltage/current) and the same software version must be installed.

P215	Action	Explanation
0	Off	-
1	Copy SSW → HMI	Transfers the current parameter contents from the Soft-Starter and from Users 1/2 to the non volatile (HMI) keypad memory (EEPROM). The current Soft-Starter parameters are not changed.
2	Paste HMI → SSW	Transfers the contents of the non-volatile (HMI) keypad memory (EEPROM) to the current Soft-Starter SSW-06 parameters and to user 1 or 2 memories.

Table 6.19 *- Copy function*

Procedures:

1. Connect the Keypad to the Soft-Starter SSW-06 from which the parameters will be copied (Soft-Starter A);
2. Set P215=1 (copy) for transferring the parameter from the Soft-Starter A to the HMI. Press the key PROG. While copy function is being executed, the display will show **COPY**. P215 resets automatically to 0 (Inactive) after the transfer has been completed.
3. Disconnect the keypad (HMI)from the Soft-Starter SSW-06.
4. Connect the same Keypad to the Soft-Starter SSW-06 to which the parameters should be transferred (Soft-Starter B).
5. Set P215=2 (paste) for transferring the content from the non-volatile keypad memory (EEPROM containing the parameter of the Soft-Starter A) to the Soft-Starter B. Press the key PROG . While the keypad is executing the copy function, the display shows **COPY**. When P215 returns to 0, the parameter transfer has been concluded. Now Soft-Starters A and B have the same parameter content.

Please remember:
If Soft-Starters A and B command different motors, please check the motor parameters of Soft-Starter B.
For copying the parameter contents from Soft-Starter A to other Soft-Starter, repeat procedures 4 and 5 above.

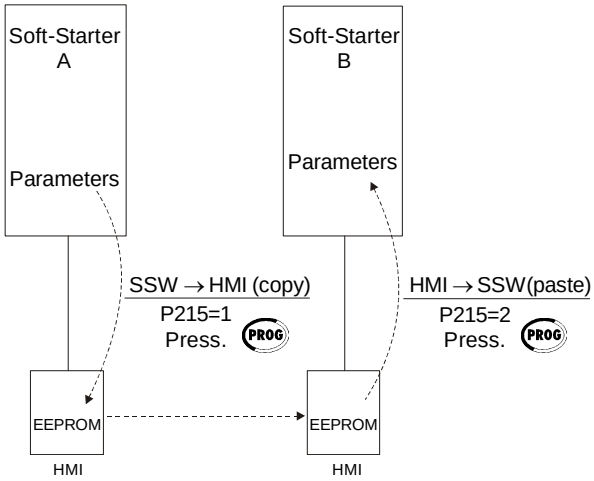

Figure 6.12 - *Parameter Copying from "Soft-Starter A" to "Soft-Starter B"*

Parameter	Range [Factory Setting] Unit	Description / Notes
		☑ The Keypad (HMI) can not be operated while it is executing the read or write procedures. **NOTES!** 1) If the Keypad (HMI) has saved parameters of a "different version" than that installed in Soft-Starter SSW-06 to which it is trying to copy the parameters, the operation will not be executed and Soft-Starter SSW-06 will display error E10 (Error: Copy Function not permitted). "Different Version" are those that are different in "x" or "y", supposing that the numbering of Software Versions is described as **Vx.yz**. 2) This function changes all SSW-06 parameters to the new values.
P218 LCD Display Contrast Adjustment	0 to 150 [127] -	☑ It allows the adjustment of the LCD Display contrast, as a function of the viewing angle. Increase/decrease the parameter content untill the best contrast is obtained.
P220 (1) LOCAL/REMOTE Source Selection	0 to 8 [2] -	☑ Defines the command source that will select between the LOCAL / REMOTE selection condition.

P220	Local/Remote Selection	Default Condition
0	Always Local Condition	-
1	Always Remote Condition	-
2	Key LOC REM of the Keypad (HMI)	Local
3	Key LOC REM of the Keypad (HMI)	Remote
4	Digital Inputs DI4 ... DI6	(P266 ... P268)
5	Serial Communication	Local
6	Serial Communication	Remote
7	Fieldbus Communication	Local
8	Fieldbus Communication	Remote

Table 6.20 *- LOCAL/REMOTE Selection*

☑ Default condition = when Soft-Starter SSW-06 is powered-up (start-up)
☑ In the factory default setting, the key LOC REM of the Keypad (HMI) will select Local or Remote Mode. When powered up, the Soft-Starter SSW-06 starts in Local mode.

Parameter	Range [Factory Setting] Unit	Description / Notes
P229 (1) Command Selection -Local Condition	0 to 3 [0=HMI] -	☑ Defines the origin of the Soft-Starter SSW-06 enable/disable commands.
P230 (1) Command Selection -Remote Condition	0 to 3 [0=Terminals] -	

P229/P230	Origin of the Commands
0	Keypad keys (HMI)
1	Digital Input DIx
2	Serial Communication
3	Fieldbus Communication (DevideNet or Profibus DP)

Table 6.21 *- Command Selection*

Parameter	Range [Factory Setting] Unit	Description / Notes
P231 (1) FWD/REV Selection	0 to 2 [0=Inactive] -	

P231	Action
0	Inactive
1	By Contactor
2	JOG Only

Table 6.22 *- FWD/REV selection*

"By Contactor"

☑ This option enables the possibility of changing the direction of rotation via contactors connected at the input power supply.

☑ The new method implemented in the Soft-Starter SSW-06 allows the use of only two contactors to change the motor direction of rotation and isolate the power supply at the same time.

☑ Possibility of changing the direction of rotation with inside delta motor connection.

☑ When the motor is stopped the contactors are opened. When the motor is enabled the specific contactor is enabled.

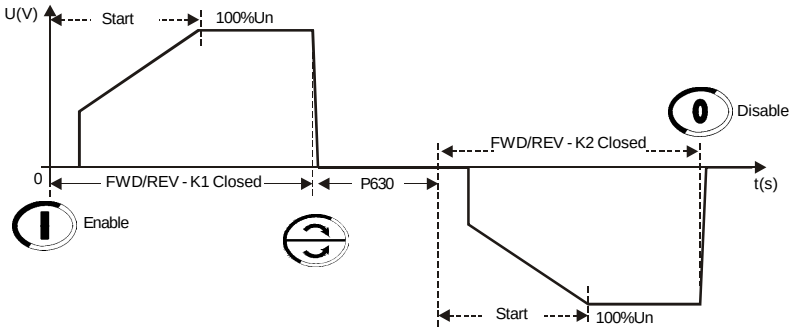

Figura 6.13 *– Troca do sentido de giro via contator*

NOTES!

1. Set P277=1 (FWQ/REV-K1) and P278=1 (FWQ/REV-K2) before connecting the power supply.
2. The method used to start the motor to a new direction of rotation will be the same as the one set to start the motor at the first time.
3. The motor will start again only after the time set at P630 (time delay after starting).
4. See the recommended setup at items 3.3 and 3.3.8.

Parameter	Range [Factory Setting] Unit	Description / Notes
		"JOG Only" ☑ This option allows the slow speed with Jog in both forward and reverse directions without auxiliary contactors connected at the input power supply. ☑ See more information and the notes at the P510 and P511 parameters. 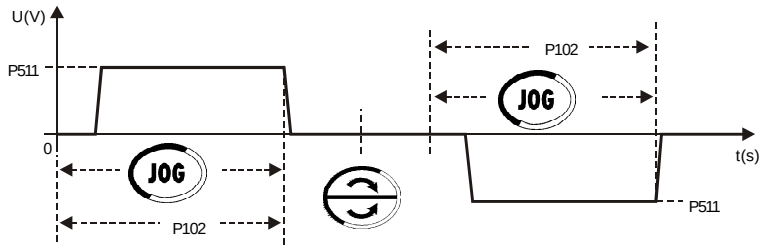 ***Figure 6.14*** *- Motor direction of rotation with "Jog only"*
P251 AO1 Output Function (0 to 10)V	0 to 10 [0=Not used] -	☑ Check possible options in table 6.24 and Figure 6.15. ☑ For the values shown in Table 6.24, P252=1000 and AO1=10V.
P252 AO1 Analog Output gain	0.000 to 9.999 [1.000] -	☑ Sets the gain of the analog output AO1. ☑ For P252=1.000 the value of output AO1 is set according to the description in Figure 6.15.
P253 AO2 Analog Ouput Function (0 to 20)mA or (4 to 20)mA	0 to 10 [0=Not Used] -	☑ Check the possible options in Table 6.24 and Figure 6.15. ☑ For the values shown in Table 6.24, P253=2, P254=1000 and AO2=20mA.
P254 AO2 Analog Output Gain	0.000 to 9.999 [1.000] 0.001	☑ Sets the gain of the analog output AO2. ☑ For P254=1.000 the value of output AO2 é is set according to the description in Figure 6.15.
P255 AO2 Analog Output Type (0 to 20)mA or (4 to 20)mA	0 or 1 [0=0-20mA] -	☑ It selects the signal type of the current analog output AO2. P255 | Output type 0 | (0 to 20)mA 1 | (4 to 20)mA ***Table 6.23*** *- AO2 signal type* ☑ For transforming the current analog output AO2 to a voltage output of 0 to 10V, connect a resistor of 500Ω ± 1% 0.5W in parallel with the output signal a resistor of 500Ω ± 1% 0.5W. ☑ Remember when the output type is selected to 4 to 20mA, this will be the total range of the signal output. 0% of the signal = 4mA and 100% of the signal = 20mA.

Parameter	Range [Factory Setting] Unit	Description / Notes

P251/P253	Function of the Analog Output	Full Scale when
0	Not used	-
1	Current in % In of the SSW	5 x P295
2	Input Voltage in %Un of the SSW	1.5 x P296(max.)
3	Motor Voltage in % Un of the SSW	1.5 x P296(max.)
4	Power Factor	P008 = 1.00
5	Thermal Protection	P050 = 250%
6	Power in W	1.5 x √3 x P295 x P296(max.) x P008
7	Power in VA	1.5 x √3 x P295 x P296(max.)
8	Torque in %Tn of the Motor	P009 = 100%
9	Fieldbus	16383 (3FFFh)
10	Serial	16383 (3FFFh)

Table 6.24 *- Functions of the Analog Outputs*

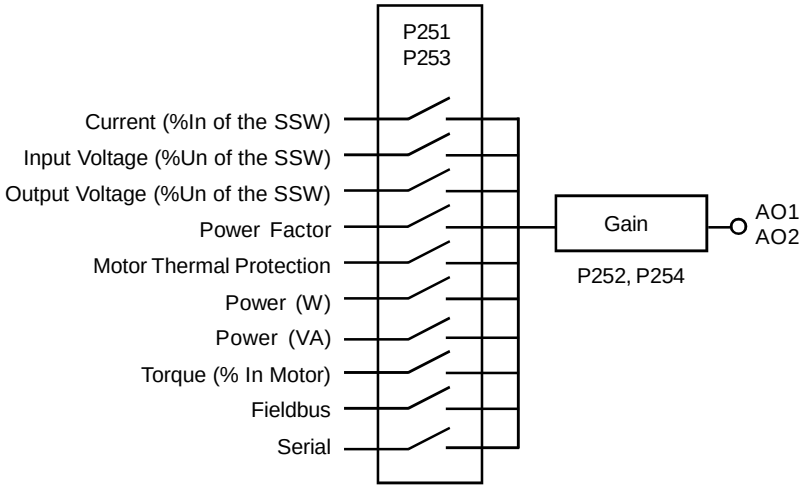

Figure 6.15 - *Block diagram of the Analog Outputs*

☑ Scale of the Analog Output indications:
- Full scale =10V: for Output AO1.
- Full scale =20mA for Output AO2.

P264 (1)
Digital Input DI2 Function

0 to 2
[2=Error Reset]
-

P265 (1)
Digital Input DI3 Function

0 to 2
[0=Not used]
-

P266 (1)
Digital Input DI4 Function

0 to 6
[0=Not used]
-

☑ Check the available options in Table 6.25.

The states of the digital inputs can be monitored in parameter P012.

☑ **"Enable/Disable"** = Closed/Open Digital Input DI1 respectively. No specific Parameter need to be programmed for this function. Only programming of the Enable/Disable command for the digital input is required. .

☑ **"Start/Stop"** = When P264=1 (Start/Stop at three wires) is programmed, the digital input DI1 and DI2 become automatically: DI1=Start and DI2=Stop. Use pulsing switches.

Parameter	Range [Factory Setting] Unit	Description / Notes
P267 (1) Digital Input DI5 Function	0 to 6 [0=Not used] -	☑ **"Local/Remote"** = Digital Input is open/closed respectively. Do not program more than one digital input for this function. ☑ **"Error Reset"** = Resets the errors when the digital input is closed. Use only pulsing switch. When the input remains closed, the error reset will not act.
P268 (1) Digital Input DI6 Function	0 to 7 [0=Not used] -	☑ **"No External Error"** = No External Error will be present when the digital input is closed. ☑ **"General Enabling/General Disabling"** = Closed/Open to the digital input, respectively. This function allows the motor to start when it is in general enabling and to stop without a deceleration ramp when given the general disabling command. There is no need to program General Enabling to start the motor via digital input. If the general enabling is programmed via digital input, this must be closed to allow the motor to start, even if the commands are not via digital inputs. ☑ **"Motor Thermistor"** = The DI6 digital input is associated to the input of the motor thermistor (PTC). If you want to used the DI6 as a normal digital input, you must program the Parameter P268 to the desired function and you must connect in series to the input a resistor with its resistance between 270W and 1600W, as shown below: 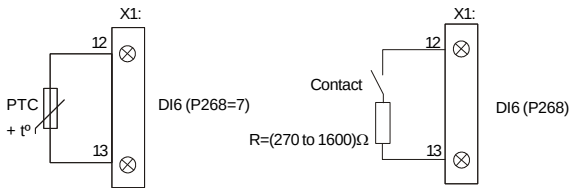 ***Figure 6.16 -*** *PTC connection diagram or Digital Input* ☑ **"Rotation Direction"** = Digital input open K1 "on" and K2 "off", digital input closed K1 = "off" and K2 "on" (item 3.3.8). This enables the change control of the rotation direction through digital input. Do not program more than one digital input for this function ☑ **"Jog"** = It is possible to enable the slow speed with Jog via Digital Input when it is closed. Use a push-botton only. If more than one digital input was programmed for this function, any one which is closed enables the Jog. ☑ **"Brake Off"** = It is possible to disable the braking methods when the digital input is open, for extra safety, for monitory the real motor standstill and disable the braking immediately. If more than one digital input is programmed for this function, any one which is opened disables the braking immediately.

Parameter	Range [Factory Setting] Unit	Description / Notess

Dlx Parameter / Function	DI1	P264 (DI2)	P265 (DI3)	P266 (DI4)	P267 (DI5)	P268 (DI6)
Not used	-	0	0	0	0	0
Enable/Disable or Start	√	-	-	-	-	-
Stop (Three wires)	-	1	-	-	-	-
General Enable	-	-	1	-	-	-
FWD/VER REV	-	-	-	1	1	1
Local/Remote	-	-	-	2	2	2
No external Error	-	-	-	3	3	3
JOG	-	-	-	4	4	4
Brake Off	-	-	-	5	5	5
Error Reset	-	2	2	6	6	6
Motor Thermistor	-	-	-	-	-	7

Table 6.25 - *Functions of the Digital Inputs*

P277 (1)
RL1 Relay Output Function

0 to 9
[1=in Operation]
-

P278 (1)
RL2 Relay Output Function

0 to 9
[2=at Full Voltage]
-

P279 (1)
RL3 Relay Output Function

0 to 9
[6=No Fault]
-

☑ Check the available options in Table 6.26.
☑ The status of the digital outputs can be monitored in the Parameter P013.
☑ The digital output will be enabled when the function which has been programmed for the digital output is true.

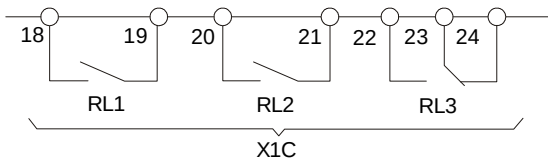

Figure 6.17 - *Status of the relay digital outputs when disabled.*

☑ **"Not used"** = the digital outputs are disabled.
☑ **"In Operation"** = the output will be enabled instantly with the Soft-Starter SSW-06 Enable command, and will only be disabled when the Soft-Starter SSW-06 receives the command Disable, or when the end of the deceleration ramp is reached, if programmed.
☑ **"Full Voltage"** = the output will be enabled when the Soft-Starter SSW-06 reaches 100% Un and it will be disabled when the Soft-Starter SSW-06 receives the command Disable.
☑ **"External By-pass"** = its operation is similar to the "Full Voltage" operation, but it must be applied only when the use of an external By-pass contactor is required. See P140 and the recommended setup at items 3.3 and 3.3.12.
☑ **"FWD/REV-K1"** = This operation is similar to the "In Operation", but it must be enabled with forward motor direction of rotation. See P231 and the recommended setup at items 3.3 and 3.3.8.
☑ **"FWD/REV-K2"** = This operation is similar to the "In Operation", but it must be enabled with reverse motor direction of rotation. See P231 and the recommended setup at items 3.3 and 3.3.8.
☑ **"DC-Braking"** = The output will be enabled during the DC-Braking is active. See P500 and the recommended setup at items 3.3 and 3.3.11. The output will be enabled when DC-Braking is active. See P500 and the recommended set-up at items 3.3 and 3.3.11.

Parameter	Range [Factory Setting] Unit	Description / Notes

☑ **"No Fault"** = the output is enabled without error. i. and., if the Soft-Starter SSW-06 is not disabled due to any error.
☑ **"Fault"** = the output is enabled with error. i. and., if the Soft-Starter SSW-06 is disabled due to any error.

RLx Parameter / Function	P277 (RL1)	P278 (RL2)	P279 (RL3)
Not used	0	0	0
In Operation	1	1	1
At full Voltage	2	2	2
External By-pass	3	3	3
FWD/REV-K1	4	-	-
FWD/REV-K2	-	4	-
DC-Braking	5	5	5
No Fault	6	6	6
Fault	7	7	7
Fieldbus	8	8	8
Serial	9	9	9

Table 6.26 - *Functions of the Relay Outputs*

P295 (1) (2)
Rated Current

0 to 20
[According to the rated current of the Soft-Starter SSW-06]
-

P295	Rated Current	P295	Rated Current	P295	Rated Current
0	10A	7	130A	14	480A
1	16A	8	170A	15	604A
2	23A	9	205A	16	670A
3	30A	10	255A	17	820A
4	45A	11	312A	18	950A
5	60A	12	365A	19	1100A
6	85A	13	412A	20	1400A

Table 6.27 *– Rated current configuration*

ATTENTION!
Always Program this parameter with a current that matches exactly the current of the model of your Soft-Starter SSW-06. Error in programming this parameter may damage your Soft-Starter SSW-06 exactly.

P296 (1) (2)
Rated Voltage

0 or 1
[According to the rated voltage of the Soft-Starter SSW-06]
-

P296	Voltage Range
0	220/575V
1	575/890V

Table 6.28 - *Voltage range*

ATTENTION!
Program always this parameter with a voltage that matches exactly the voltage of the model of your Soft-Starter SSW-06.

6.4 - SERIAL COMMUNICATION PARAMETERS – P300 to P399

Parameter	Range [Factory Setting] Unit	Description / Notes
P308 (1)(2) Soft-Starter address on the Serial Communication Network	1 to 247 [1] 1	☑ Defines the Soft-Starter SSW-06 address on the serial Modbus-RTU communication network. ☑ For more information, refer to the Serial Communication Manual for the Soft-Starter SSW-06.
P309 (1)(2) Fieldbus Communication Board Enabling	0 to 6 [0=Inactive] -	

P309	Action
0	Inactive
1	Profibus-DP (1 Input and 1 Output)
2	Profibus-DP (4 Inputs and 4 Outputs)
3	Profibus-DP (7 Inputs and 7 Outputs)
4	DeviceNet (1 Input and 1 Output)
5	DeviceNet (4 Inputs and 4 Outputs)
6	DeviceNet (7 Inputs and 7 Outputs)

Table 6.29 *- Fieldbus Communication Protocol Type*

☑ Enables and defines the protocol type of the Fieldbus Communication Board.
☑ For more information, refer to the Fieldbus Communication Manual for the Soft-Starter SSW-06.

NOTE!
Without a Fieldbus Communication Board, this parameter must remain at 0 (not used).

P312 (1)(2) Protocol Type and Transfer Rate of the Serial Communication.	1 to 9 [1=Modbus-RTU (9600bps, no parity)] -	

P312	Action
1	Modbus-RTU (9600bps, no parity)
2	Modbus-RTU (9600bps, odd parity)
3	Modbus-RTU (9600bps, even parity)
4	Modbus-RTU (19200bps, no parity)
5	Modbus-RTU (19200bps, odd parity)
6	Modbus-RTU (19200bps, even parity)
7	Modbus-RTU (38400bps, no parity)
8	Modbus-RTU (38400bps, odd parity)
9	Modbus-RTU (38400bps, even parity)

Table 6.30 *- Serial Communication Protocol Type*

☑ Defines the protocol standards of the serial Modbus-RTU communication protocol.
☑ For more information, refer to Serial Communication Manual for the Soft-Starter SSW-06.

P313 Serial and Fieldbus Communication Error Actions (E28, E29 and E30)	0 to 3 [0=Off] -	

P313	Action
0	Off
1	Disable
2	General Disable
3	Changes to Local

Table 6.31 - *Error action of the Serials and Fieldbus Communication*

Parameter	Range [Factory Setting] Unit	Description / Notes
		☑ Defines the action to be adopted when some errors relating to the Serial or Fieldbus Communication occur. ☑ For more information refer to the Serial Communication Manual and/ or to the Fieldbus Communication Manual for the Soft-Starter SSW-06. **NOTE!** When Serial Communication or Fieldbus Communication is not used, this parameter must remain at 0 (not used).
P314 (1) Timeout Time for Serial Communication Telegram Reception	0 to 999 [0=not used] 1s	☑ Allows time programming for the fault detection during the serial Modbus-RTU communication. So you can adopt an action when, for instance, the communication with the master of the Modbus-RTU network is lost. ☑ For more information, refer to the Soft-Starter SSW-06 Fieldbus Communication Manual. **NOTE!** This parameter must remain at 0 (not used), when the serial communication is not being used.
P315 (1) Read Parameter via Fieldbus 1	0 to 999 [0] 1	☑ This parameter allows selecting the number of the first parameter to be selected, which content will be sent from the Soft-Starter SSW-06 to the Master of the Fieldbus network. ☑ For more details, refer to the Soft-Starter SSW-06 Fieldbus Communication Manual.
P316 (1) Read Parameter via Fieldbus 2	0 to 999 [0] 1	☑ This parameter allows selecting the number of the second parameter to be selected, which content will be sent from the Soft-Starter SSW-06 to the Master of the Fieldbus network. ☑ For more details, refer to the Soft-Starter SSW-06 Fieldbus Communication Manual.
P317 (1) Read Parameter via Fieldbus 3	0 to 999 [0] 1	☑ This parameter allows selecting the number of the third parameter to be selected, which content will be sent from the Soft-Starter SSW-06 to the Master of the Fieldbus network. ☑ For more details, refer to the Soft-Starter SSW-06 Fieldbus Communication Manual.

6.5 MOTOR PARAMETERS - P400 to P499

Parameter	Range [Factory Setting] Unit	Description / Notes
P400 (1) Motor Rated Voltage	0 to 999 [380] 1V	☑ Set this parameter value according to the motor nameplate and the connection diagram in the terminal box. ☑ The motor protection is based on the content of this parameter.
P401 (1) Motor Rated Current	0.0 to 1500 [20.0] 0.1A	☑ Set this parameter value according to the motor nameplate. ☑ The motor protection against current and the current limit are based on this parameter content. **NOTES!** 1) To ensure that these protections operate correctly, the motor rated current must not be lower than 30% of the rated current of the Soft-Starter SSW-06. 2) The use of motors that operate with load duties lower than 50% their rated loads are not recommended. 3) Program the rated current of the motor according to the power supply voltage.
P402 (1) Motor Rated Speed	400 to 3600 [1780] 1 rpm	☑ Set the motor speed according to the motor nameplate data. ☑ The motor speed must be the same as indicated on the motor nameplate, already considering its slip.
P404 (1) Motor Rated Power	0.1 to 2650 [75] 0.1kW	☑ Set the motor power according to the motor nameplate data. ☑ If the power is in CV or HP, multiply the value by 0,74kW.
P405 (1) Motor Power Factor	0 to 1.00 [0.89] 0.01	☑ Set the Motor Power Factor according to the motor nameplate data.
P406 (1) Service Factor	0 to 1.50 [1.00] 0.01	☑ Set the Service Factor according to the motor nameplate. ☑ The current protections are based on the content of this parameter.

6.6 SPECIAL FUNCTION PARAMETERS - P500 to P599

Parameter	Range [Factory Setting] Unit	Description / Notes
P500 (1) Braking Methods	0 to 3 [0=Inactive] -	

P500	Action
0	Inactive
1	Reverse Braking
2	Optimal Braking
3	DC-Braking

Table 6.32 *- Braking Methods selection*

☑ There are three braking methods implemented in the Soft-Starter SSW-06. These braking methods should be used only when fast stop is necessary. stops are necessary.

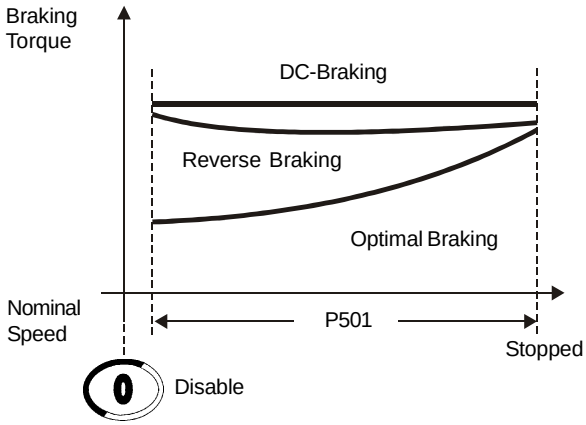

Figure 6.18 *- Braking Torque*

"Reverse Braking"

☑ This is an efficient method to stop very high inertia loads.

☑ The motor will stop via AC level voltage in reverse direction until near 20% of the nominal speed when a Optimal Braking is applied to stop the motor.
The motor will stop via AC level voltage in reverse direction until close to 20% of the rated speed, when Optimal Braking is applied to stop the motor.

☑ The Reverse Braking AC level and Optimal Braking are set in P502.

☑ Two contactors are needed.

☑ It is compatible with the Soft-Starter SSW-06 inside delta motor connection, except for two and eight pole motors.

Parameter	Range [Factory Setting] Unit	Description / Notes

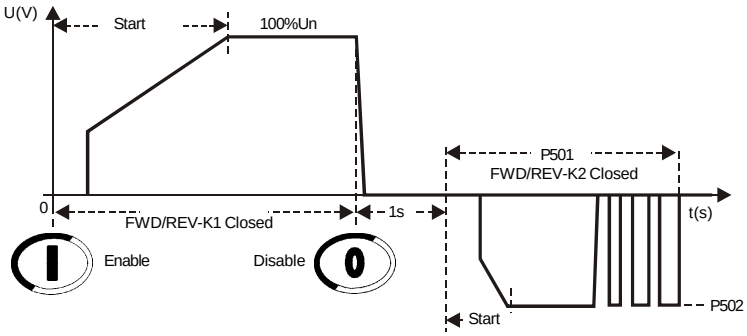

Figura 6.19 *- Reverse Braking*

NOTES!

1. The contactors must be the same model and withstand the motor starting current. For security use auxiliary contact to avoid the contactors to close at the same time. For security, use an auxiliary contact to avoid contactors closing at the same time.
2. Use a digital input set to the “Braking Off” option to avoid starting the motor again in the wrong direction.
3. Por segurança uma entrada digital programada como “Sem frenagem”, para possibilitar a utilização de um sensor de parada no motor que desabilite a frenagem imediatamente, evitando que o motor gire em sentido contrário.
4. The Soft-Starter SSW-06 protects the motor while the Reverse Braking AC level is applied.
5. See the parameters: P266, P267, P268, P277, P278, P500, P501, P502, and P503 and see the recommended setup set-up at 3.3 and 3.3.9.

“Optimal Braking”

☑ This is an efficient method to stop loads.
☑ The direct current is only applied when it will go to produce braking effect. when it produces a braking effect.
☑ No contactor needed.
☑ It’s compatible with the inside delta motor connection.

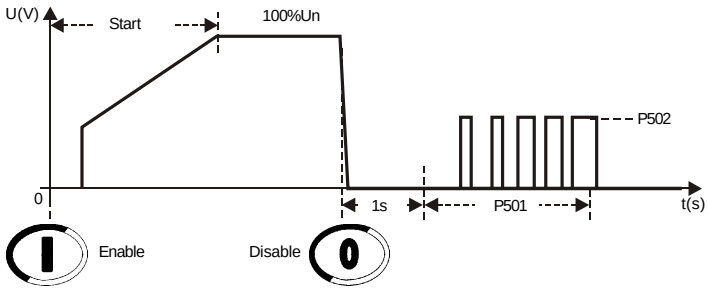

Figura 6.20 *- Optimal Braking*

Parameter	Range [Factory Setting] Unit	Description / Notes

NOTES!

1. Use the digital input set to "General Enable" to stop the motor without braking.
2. Use one digital input set to Braking Off, for extra safety, for monitory the real motor standstill and disables the braking immediately.
3. For high inertia loads it is recommended to use PTC motor input.
4. It is not recommended the use of Optimal Braking with two and eight pole motors.
5. See the parameters: P266, P267, P268, P500, P501, P502, and P503 and see the recommended setup set-up at items 3.3 and 3.3.10

"DC-Braking"

☑ This is an old and efficient method to stop very high inertia loads.
☑ The direct current is applied all the time until the motor stops.
☑ One contactor is needed to short-circuit two outputs output lines U and V.
☑ The necessary current to stop the motor is very high and continuously applied.
☑ It is not compatible with the Soft-Starter SSW-06 inside delta motor connection.

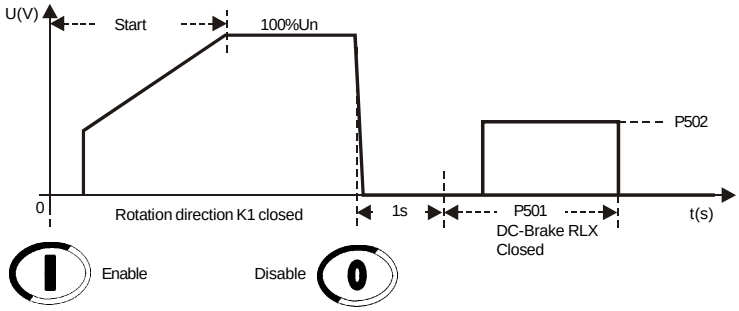

Figura 6.21 *- DC-Braking*

NOTES!

1. Use the digital input set to General Enable to stop the motor without braking.
2. Use one digital input set to Braking Off, for extra safety, for monitoring the real motor standstill and disables the braking immediately.
3. It is recommended using a PTC motor input. Using a PTC motor input is recommended
4. See the parameters: P266, P267, P268, P277, P278, P279, P500, P501, P502, and P503 and see the recommended setup set-up at items 3.3 and 3.3.11.

Parameter	Range [Factory Setting] Unit	Description / Notes
P501 Braking Time	1 to 299 [10] 1s	☑ P501 sets the maximum time that the braking voltage is applied. **ATTENTION!** 1. This is the main protection of all braking methods. Set it according to the application, since the Soft-Starter SSW-06 and the motor can withstand the settings. 2. The parameters: P001, P002, P003, P008, P009, P010 and P011 are set to zero during Optimal Braking and DC-Braking. 3. The current protections do not work with a DC current because the current transformers saturate with DC current. 4. The Soft-Starter SSW-06 does not protect the motor while it is performing braking. while it is braking.
P502 Braking Voltage Level	30 to 70 [30] %	☑ P502 sets the braking voltage level. It is based on the AC line voltage converted to DC voltage. ☑ This parameter also sets the level of the AC Reverse Braking. **ATTENTION!** 1. Be careful with this voltage level. Set it according to the application since the Soft-Starter SSW-06 and the motor can withstand the settings. 2. Start with low voltage levels and increase it according to the necessity. increase them according 3. The current protections do not work with a DC current because the current transformers saturate with DC current. 4. The Soft-Starter SSW-06 does not protect the motor while it is performing the braking. while it is braking. 5. To measure this current during the braking methods you need a special current meters with hall effect transformers.
P503 Braking End Detection	0 to 1 [0=Inactive] -	P503 / Description 0 / Inactive 1 / Automatic ***Table 6.33*** *- Braking End Detection* ☑ This parameter set sets the automatic detection of the motor standstill. **NOTES!** 1. This function does not work with two and eight pole motors. 2. This function does not work with inside delta motor connections. 3. The motor standstill detection can vary with the motor temperature. 4. Always use the braking time as the main protection.

Parameter	Range [Factory Setting] Unit	Description / Notes
P510 (1) Jog	0 to 1 [0=Inactive] -	

P510	Action
0	Inactive
1	Active

Table 6.34 *- Jog selection*

☑ This parameter enables the fixed slow speed with Jog.
☑ Slow speed with Jog forward foreward direction is about 1/7 of the full speed.
☑ Slow speed with Jog reverse direction is about 1/11 of the nominal speed rated.

P510	P231	Action
0 Inactive)	-	without Jog
1 (Active)	0 (Inactive)	allows the slow speed with Jog only in forward direction.
1 (Active)	1 (By Contactor)	allows the slow speed with Jog in the same direction of the power supply and the auxiliary contactors connected at the input power supply, changing the motor direction of rotation.
1 (Active)	2 (JOG Only)	allows the slow speed with Jog in both forward and reverse directions without contactors.

Table 6.35 *- Jog and motor direction of rotation*

P511 Jog Level	10 to 100 [10] 1%	

☑ This parameter set sets the level of the torque torque level of the slow speed with Jog.
This parameter sets the slow speed torque level with Jog.

ATTENTION!

1. Be careful with this torque level. Set it according to the application since the Soft-Starter SSW-06 and the motor can withstand the settings.
2. The motor can be enabled during a short period of time with Jog. Connect a push-botton to a digital input to enable the Jog.
3. The P102 parameter is the limit of time protection to the Jog protection of the. If this time was exceed the fault E62 will actuate. If this time is exceeded, fault E62 will appear. The P102 parameter is the time limit protection of the Jog. If this time is exceeded, fault E62 will appear.
4. The parameters: P001, P002, P003, P008, P009, P010 and P011 are set to zero during the Jog Function.
5. The current protections do not work with the Jog current because the current transformers saturate with the low Jog frequency.
6. Soft-Starter SSW-06 does not protect the motor during a Jog without the use of a PRC sensor on the motor.
7. To correctly measure the currents during the Jog, it is necessary to use hall effect transformers.

Parameter	Range [Factory Setting] Unit	Description / Notes
P520 (1) Torque Pulse at Start	0 or 1 [0=Inactive] -	☑ Soft-Starter SSW-06 allows for the use of a torque pulse during the starting process for loads that have high resistance during the starting process. ☑ Enabled through P520=1. The duration of this pulse may be adjusted at P521. ☑ This pulse will be applied according to the type of control selected at P202: - Voltage ramp: the voltage level may be set at P522. - Current limit: the current level may be set at P523. - Current Ramp: with adjustable current level.
P521 Pulse Time at Start	0.1 to 2 [0.1] 0.1s	
P522 Pulse Level of the Starting Voltage	70 to 90 [70] 1 %Un of the motor	**NOTES!** 1) Use this function only for specific applications, when so required. 2) This function is not required for the Torque Control.
P523 Pulse Level of the Starting Current	300 to 700 [500] 1 %In of the motor	

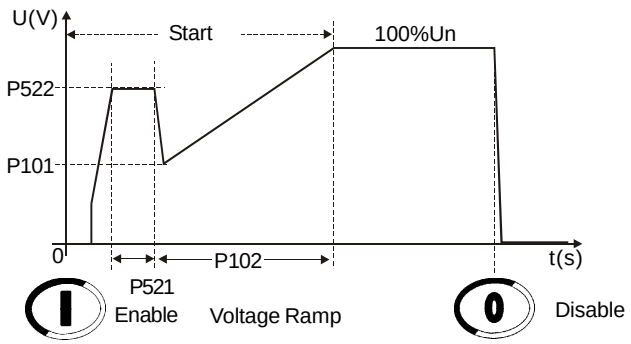

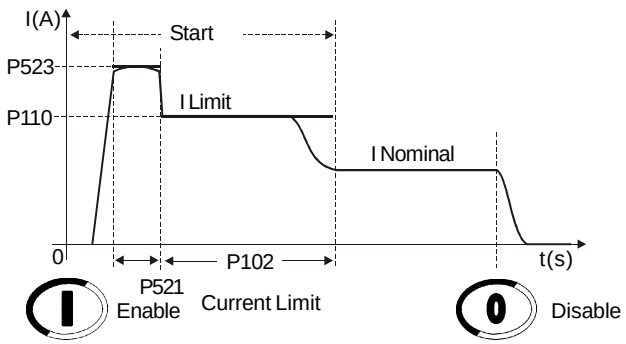

Parameter	Range [Factory Setting] Unit	Description / Notes

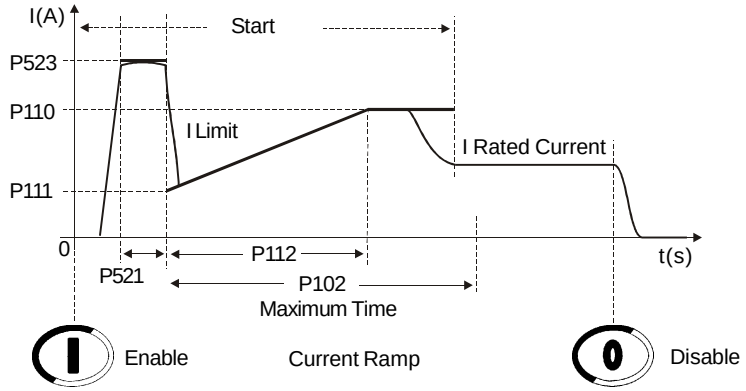

Figure 6.22 - *Actuation Levels of the Starting Torque Pulse.*

6.7 PROTECTIONS PARAMETERS - P600 to P699

P600 (1) Intermediate Undervoltage	0 to 30 [20] 1 %Un of the Motor	☑ The under and overvoltage are setting as percentage of the motor rated voltage (P400). ☑ P600 sets the minimum voltage level at which the motor can operate without problems. This protection function acts when the line voltage drops to a value lower than the set and is present during a time equal to or longer than those set at P601. If this condition is present, the Soft-Starter is disabled and an Undervoltage Error is displayed. ☑ P602 sets the maximum overvoltage level that the motor allows, during the time that has been set at P603. If this time is exceeded, the Soft-Starter is disabled and an Overvoltage Error is displayed.
P601 (1) Time of Immediate Undervoltage	1 to 99 [1] 1s	
P602 (1) Intermediate Overvoltage	0 to 20 [15] 1 %Un of the Motor	**NOTE!** These functions are active the entire time the motor is running.
P603 (1) Time of Immediate Overvoltage	1 to 99 [1] 1s	

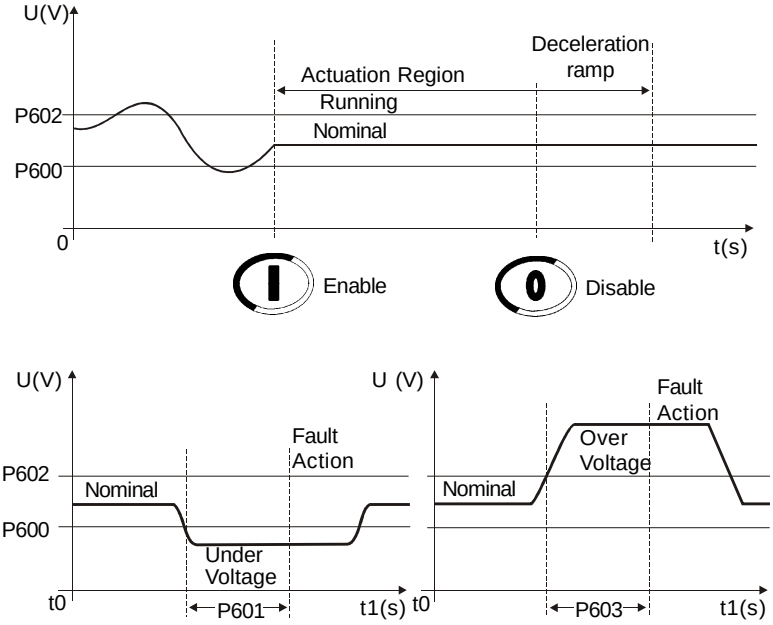

Figura 6.23 - *Actuation Levels in case of Undervoltage and Overvoltage*

Parameter	Range [Factory Setting] Unit	Description / Notes
P604 (1) Voltage Unbalance between Phases **P605** (1) Voltage Unbalance Between Phases Time	0 to 30 [15] 1%Un of the Motor 0 to 99 [1] 1s	☑ Time of Voltage Unbalance between phases is set as a percentage of the motor rated current (P400). ☑ P604 sets the maximum voltage difference between the three line phases at which the motor can operate without problems, during the time set at P605. If these values are exceeded, the Soft-Starter is switched Off and the Voltage Unbalance error is displayed. ☑ These settings also activate the phase fault protection during the starting process and during the operation at full voltage. **NOTE!** This function is active always when motor is running.
P610 (1) Immediate Undercurrent **P611** (1) Immediate Undercurrent Time **P612** (1) Immediate Overcurrent **P613** (1) Immediate Overcurrent Time	0 to 99 [20] 1%In of the motor 1 to 99 [0=Inactive] 1s 0 to 99 [20] 1%In of the motor 1 to 99 [0=Inactive] 1s	☑ The Undercurrent and the overcurrent are set as percentage of the motor rated current (P401). ☑ P610 sets the minimum current level at which the motor can operate without problems. This protection function acts when the motor current drops below the value and during a time equal or longer than those set at P611. If these values are exceeded, the Soft-Starter is switched Off and the Undercurrent Error is displayed. This function is generally used in applications with hydraulic pump which can not be operated without a load. ☑ P612 sets the maximum overcurrent levels that the motor or Soft-Starter allows during the time set at P613, after which the Soft-Starter is switched Off and the Overcurrent Error is displayed. **NOTE!** These Functions are only active after the motor start and after full voltage operation has been reached.

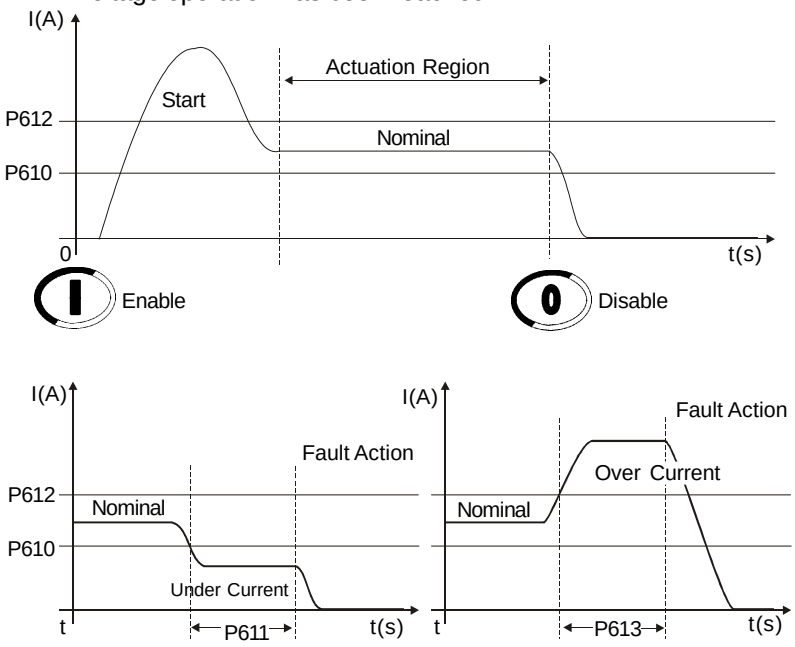

Figure 6.24 *- Actuation Levels for Overcurrent and Undercurrent*

Parameter	Range [Factory Setting] Unit	Description / Notes
P614 (1) Current Imbalance between Phases **P615** (1) Current Imbalance between Phases Times	0 to 30 [15] 1 %In of the motor 0 to 99 [0=Inactive] 1s	☑ The current unbalance values are set as percentage of the motor rated current (P401). ☑ P614 sets the maximum current difference between the three motor phases at which the motor can operate without problems, during the time set at P615. If these values are exceeded, the Soft-Starter is switched Off and the Current Unbalance error is displayed. ☑ These settings also activate the phase fault protection during the starting process and during the operation at full voltage. ☛ **NOTE!** This function is actuated only after motor start and after full voltage operation has been reached.
P616 (1) Undercurrent before Internal By-pass Closing	0 or 1 [1=Active] -	☑ This function, when enabled, ensures protection against undercurrent before By-pass closing, i. and., preventing By-pass closing in case of any supply line fault of any thyristor fault. ☑ When this function is disabled, the motor can be started with rated current lower than 10% of the rated Soft-Starter current. ☛ **NOTE!** This function can be disabled only when motors with low currents are tested.
P617 (1) Motor Overcurrent Before Internal By-pass Closing	0 or 1 [1=Active] -	☑ When this function is enabled it ensures protection against locked rotor at the end of the start, i. and., it preventing that the By-pass closes when an overcurrent two times the rated motor current is detected. ☛ **NOTE!** Disable this function only when the motor can withstand loads with higher currents.
P620 (1) RST Phase Sequence	0 or 1 [0=Inactive]	☑ The function of this parameter is to protect loads that can be run only in one direction of rotational. When this function is enabled, only the phase sequence R/1L1, S/3L2, T/5L3 is permitted.. ☑ When this function is enabled, the phase sequence is detected every time the motor is powered-up. ☑ The function is very useful for driving of driving hydraulic pumps which can be operated only in one direction of rotation.
P630 Interval of Time after Stop	2 to 999 [2] 2s	☑ This function limits the minimum time interval between a new start after the motor has been switched Off.

Parameter	Range [Factory Setting] Unit	Description / Notes

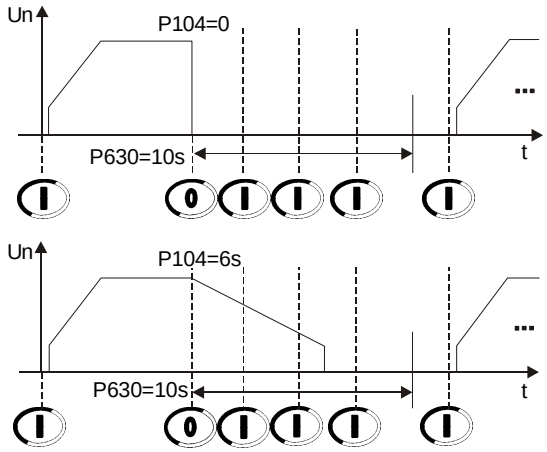

Figure 6.25 - *Operation via HMI* *and*

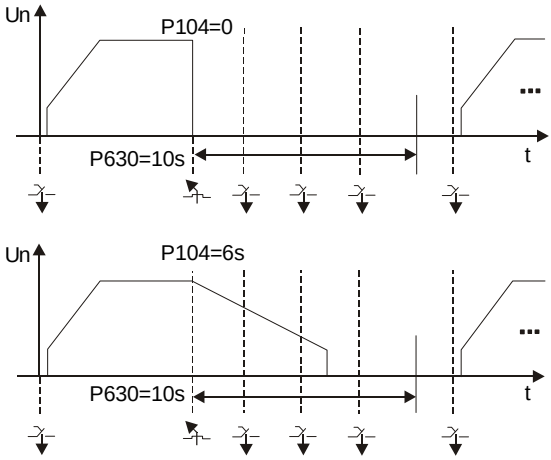

Figure 6.26 *- Operation via three-wire digital inputs (DI1 and DI2).*

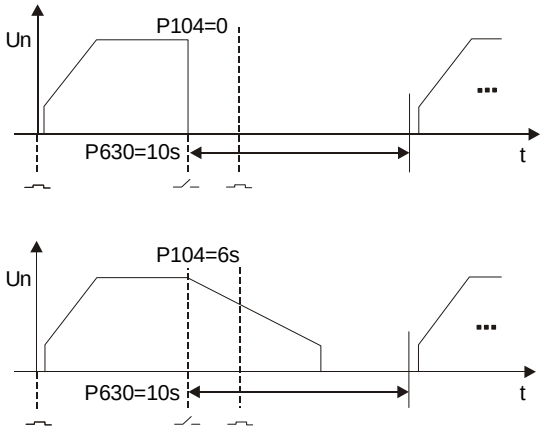

Figure 6.27 *- Operation via digital input (DI1)*

Parameter	Range [Factory Setting] Unit	Description / Notes
		NOTE! The start command will be executed only after the time interval programmed at P630 has elapsed. **NOTES!** 1) The time interval starts to be counted at the moment when the motor switch Off command is given, indifferently if a deceleration ramp has been programmed or no. 2) This function is only active when the time interval, which has been set at P630, is longer than the time set at P104 for the deceleration process, if programmed. 3) If the control board supply is removed, or if the microcontroller is reset, no time counting occurs.
P640 (1) Motor Protection Thermal Class	0 to 9 [6=30] 1	

P640	Action
0	Inactive
1	Class 5
2	Class 10
3	Class 15
4	Class 20
5	Class 25
6	Class 30
7	Class 35
8	Class 40
9	Class 45

Table 6.36 *- Thermal Classes*

☑ Soft-Starter SSW-06 has a rigid thermal protection that is efficient and totally programmable for the protection of your motor. All Soft-Starter SSW-06 models are fitted with this protection device. When activated, error E05 (overload) will be displayed and the motor will be switched off.

☑ This thermal protection has curves that simulate the motor heating and cooling. The calculation is executed by a complex Software, that estimates the motor temperature through True RMS current supplied to the motor.

☑ The actuation curves of the Thermal Protection are based on IEC 60947-4-2 standard.

☑ The heating and cooling curves are based on WEG's extensive experience with motor development. These curves adopt WEG three-phase IP55 standard motors. They also consider if the motor is cooled or not when driven.

☑ The cooling time of the thermal image depends on the motor power, which means that each power will have different cooling time. When reduction of this cooling time is required, you can use P641.

☑ The estimated motor temperature is saved in non-volatile memory every time the power supply of the control board is switched off. Thus, when the control board is switched on again, the last value saved will return.

Parameter	Range [Factory Setting] Unit	Description / Notes

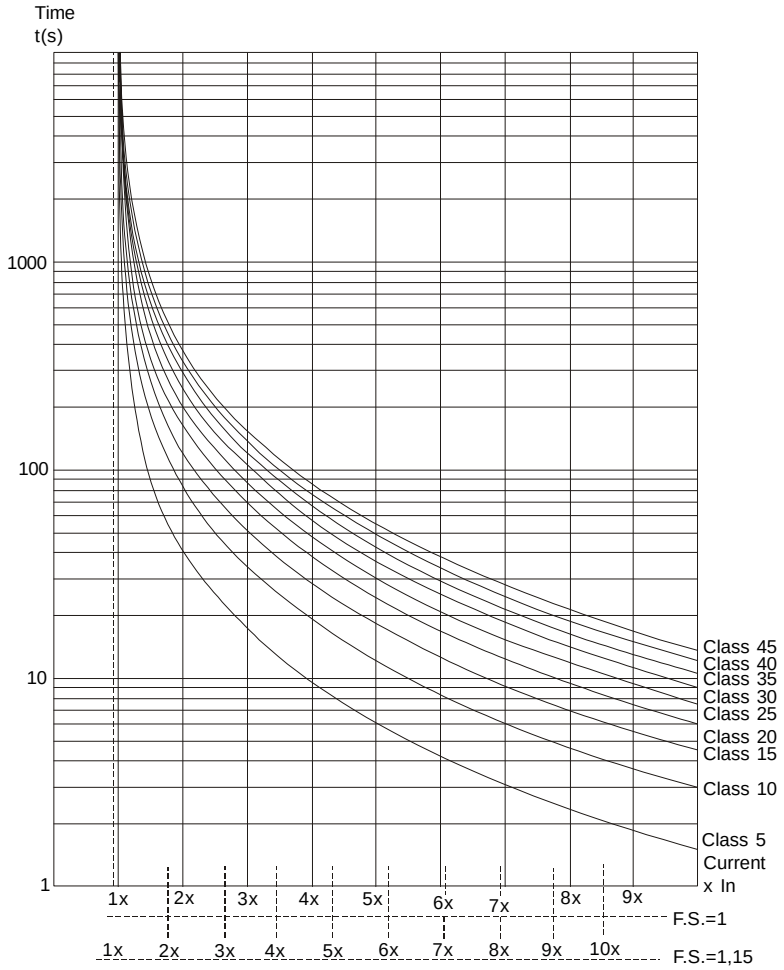

Figure 6.28 – *Thermal Protection Classes for cold motor*

Class	40	30	20	10
3xIn	135s	101.2s	67.5s	33.7s
5xIn	48.1s	36.1s	24s	12s
7xIn	24.5s	18.3s	12.2s	6.1s

Table 6.37 *– Thermal Protection Class Times for cold motor with S.F.=1.0*

Class	40	30	20	10
3xIn	180.2s	135.1s	90.1s	45.1s
5xIn	63.6s	47.7s	31.8s	15.9s
7xIn	32.4s	24.3s	16.2s	8.1s

Table 6.38 *– Thermal Protection Class Times for cold motor with S.F.=1.15.*

Parameter	Range [Factory Setting] Unit	Description / Notes

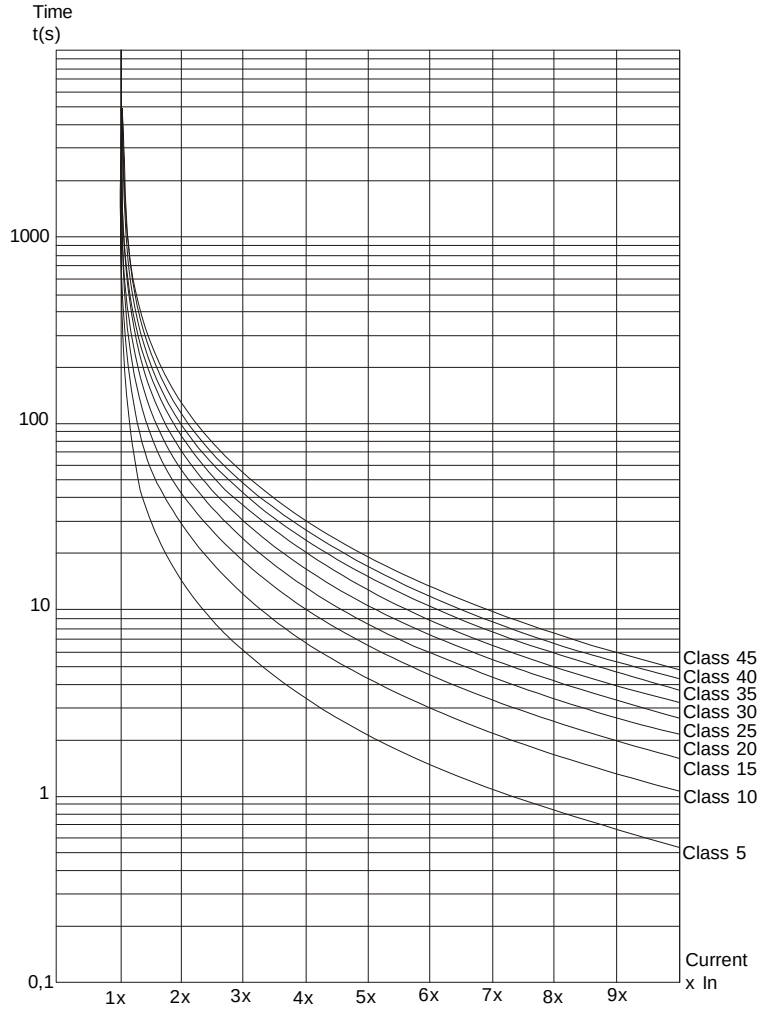

Figure 6.29 *– Thermal Protection Classes for hot motor with 100% In*

Class	40	30	20	10
3xIn	47.2s	35.4s	23.6s	11.8s
5xIn	16.8s	12.6s	8.4s	4.2s
7xIn	8.5s	6.4s	4.2s	2.1s

Table 6.39 - *Thermal Protection Time for hot motor*

Current in % of In of the Motor	Factor
0%(cold)	1
20%	0,87
40%	0,74
60%	0,61
80%	0,48
100% (rated load)	0,35

Table 6.40 - *Multiplication Factor of the Cold Thermal Classes Time to obtain Hot Thermal Class Times*

Parameter	Range [Factory Setting] Unit	Description / Notes
		NOTE! As there are several Thermal Protection Classes, you must program that Thermal Protection Class that best meets you application and protects the motor during its allowed duty. **NOTE!** The SSW-06 Soft-Starter thermal class times are an evolution of the previous WEG soft-starters, therefore the times are different than those of the SSW-03 and SSW-04. The class to be adopted must be in accordance with the SSW-06 graphs. **NOTE!** When using a motor with a PTC thermal sensor or thermostat entirely connected to the SSW-06 Soft-Starter, there is no need to enable the Thermal Classes, therefore set P640=0.
P641 (1) Auto Reset of the Thermal Memory	1 to 600 [0=Inactive] 1s	☑ Sets the time for the auto-reset of the thermal image of the motor. ☑ This function can be used for applications that require several starts per hour or those with short intervals of time between starting and stopping the motor. ☑ The motor cooling curves are based on many years of experience of WEG developing motors. They adopt the Standard IP55 Three Phase Motors with temperature elevation of 60K as a standard. They also consider if the motor is cooling when switched on or not. ☑ The thermal image cooling time depends on the power of the motor, in other words, for each power there is a different cooling time. ☑ The thermal image can also be reset if parameter P640=0 is programmed returning to the desired Thermal Class afterwards. 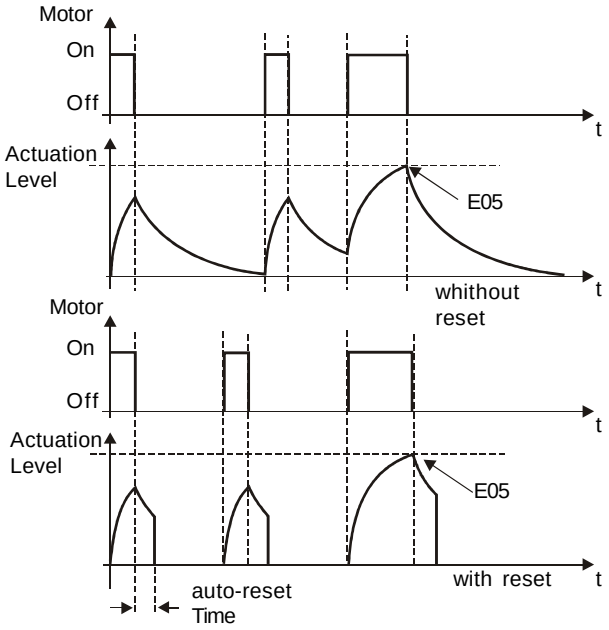 ***Figure 6.30*** *- Auto-reset of the thermal memory* **NOTE!** Please consider that when using this function, the life time useful life of the motor winding can be reduced.

APPLICATIONS AND PROGRAMMING

This Chapter is useful for setting and programming the start control type according to the application.

7.1 APPLICATIONS AND PROGRAMMING

ATTENTION!
Important information about each start control type.

ATTENTION!
For correct parameter setting you must consider the load data and use WEG Sizing Software, available at WEG Site (http://www.weg.net).
If this site can not be accessed, you can follow some practical concepts described below:

☑ Although, if you cannot use it, a few practical principles are described in this chapter.

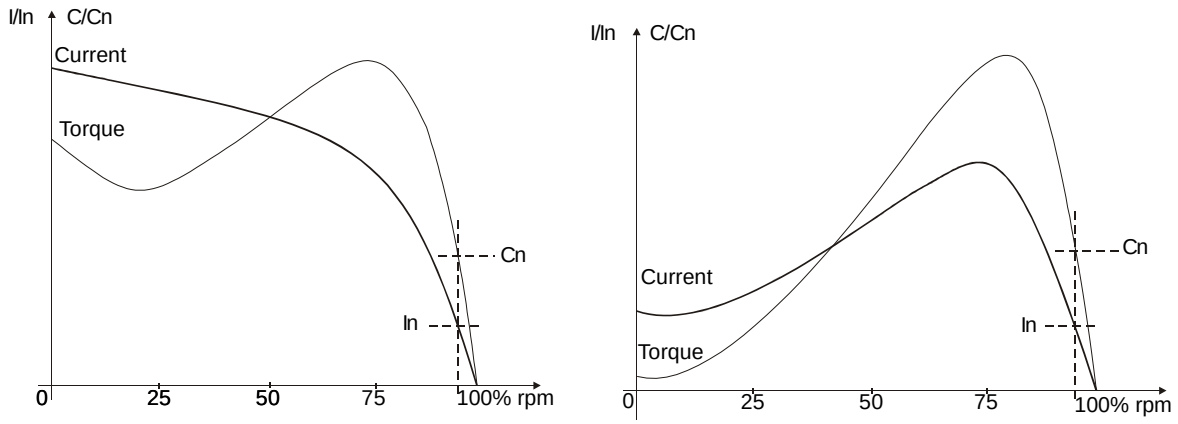

***Figure 7.1** – Characteristic torque and current curve in a direct on-line start and by Voltage Ramp*

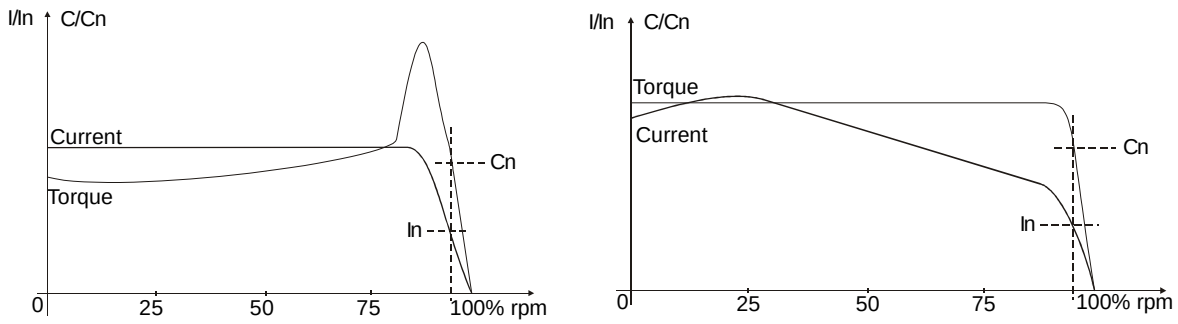

***Figure 7.2** – Characteristic torque and current curves during a start with current Limit and Torque Control*

☑ Below are some suggested characteristic curves showing the current and starting toque behavior by considering some load and control types:

Load Type	Load Type	Load Type	Control Type
Alternative Pumps 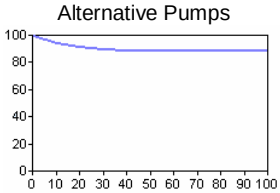	3 Point Torque control	Screw Compressors 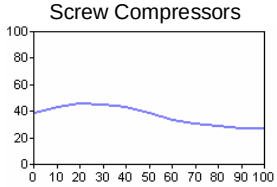	3 Point Torque control Current Limit + K.Starter
Conveyor 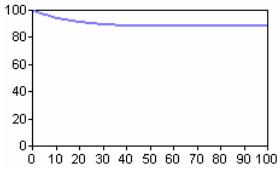	3 Point Torque control Current Limit + K.Starter	Axial Fans 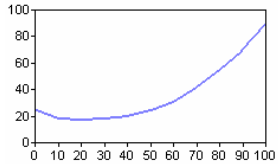	Current Limit Current Ramp 2 Point Torque control 3 Point Torque control
Extruders Vertical Sand Mills Wood Peeler 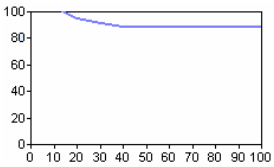	3 Point Torque control Current Limit + K.Starter	Centrifugal Fans Exhaust 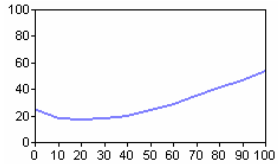	Current Limit Current Ramp
Piston Vacuum Pump Piston Compressors 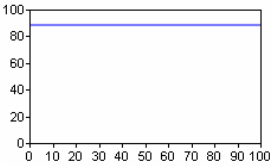	Constant Torque Control	Centrifugal Pumps Vane Vacuum Pump 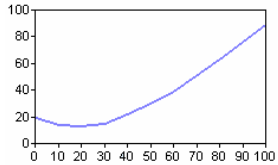	Pump Control 2 Point Torque control 3 Point Torque control
Crushers Wood Peeler 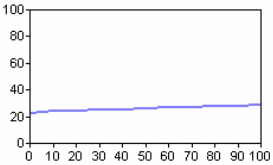	Current Limit Current Ramp	Submersible Centrifugal Pumps 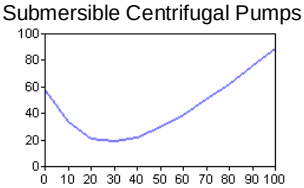	3 Point Torque control
Centrifuges Hammer Mills 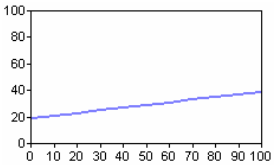	Current Limit 2 Point Torque control	Ball Mill – Ceramics 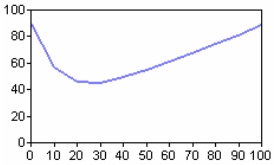	Current Ramp + K.Starter Current Limit + K.Starter
Barley – Starch Processing Wood Chipper 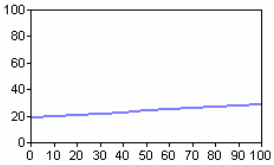	Current Limit Current Ramp	Mixers 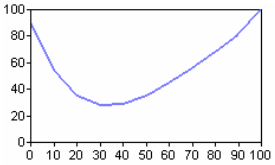	Current Ramp + K.Starter Current Limit + K.Starter
Cellulose Refiners 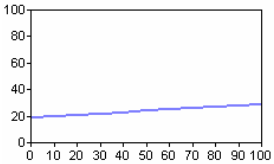	Voltage Ramp		

Table 7.1 *– Typical characteristics of staring torque curves of some load types with suggested types of control*

7.1.1 Starting by Voltage Ramp (P202=0)

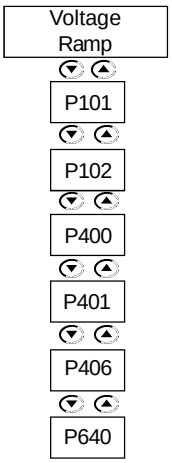

1) Set initial voltage, P101. Set initially to a low value;
2) When load is applied to the motor, set P101 to a value that allows motor running smoothly since the begin of its enabled;
3) Set P102 to the time required for the motor start. Set firstly short time, 10 to 15 seconds, after try to find the most suitable starting condition for your load.

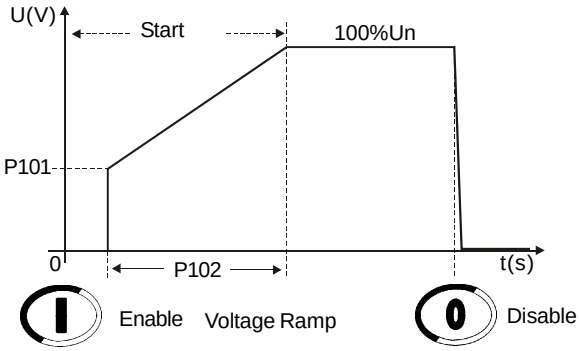

Figure 7.3 *– Starting by Voltage Ramp*

NOTES!

1) Vibrations can occur during the load start, when long starting times have been set, or motor is starting without load. In this case, decrease the starting time;
2) If errors are detected during the motor start, check all connections of the Soft-Starter to the power line, the motor connections, the voltage levels of the power line, the fuses, circuit-breakers and disconnecting switches.

7.1.2 Starting by Current Limit (P202=1)

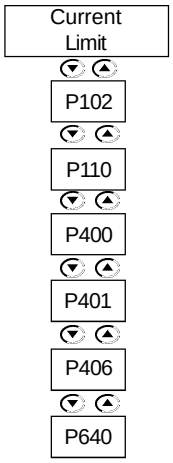

1) To start the motor with a current limit you must apply a load to the motor. No-load tests can be done by voltage ramp;
2) Set P102 to the time required for the load start. At first set short times, 20 to 25s. This time will be used as the locked rotor time, when the motor is unable to start;
3) Set P110 with Current Limit by considering its electrical installation and ensuring sufficient torque for the motor start. Initially you can set firstly 2x to 3x the rated motor current (In of the motor).

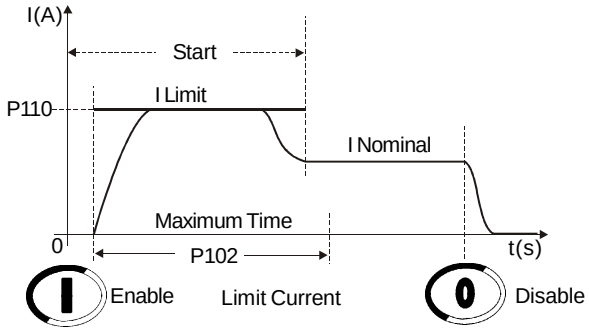

***Figure 7.4** – Starting by constant current limit*

NOTES!

1) If the current limit is not reached during the starting, the motor will start immediately.
2) P401 must be set according to the motor current;
3) Current Limits that are too low result in torques that are too low for the motor start. Always maintain the motor running after it has been enabled;
4) For loads requiring a higher initial starting torque, you can use the kick start function, P520, or the current ramp method;
5) If errors are detected during the motor start, check all connections of the Soft-Starter to the power line, the motor connections, the voltage levels of the power line, the fuses, circuit-breakers and disconnecting switches.

7.1.3 Starting by Current Ramp (P202=4)

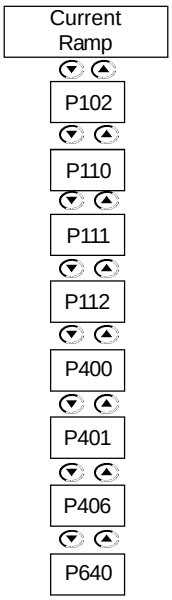

1) For starting the motor with current ramp you must apply load on the motor. No-load tests can be done by voltage ramp;
2) Use this function to help starting loads that require an higher initial torque , as compressors and belt conveyors;
3) When such a load is started with fixed current limit, you can note that the motor requires some time to start the load and then it speeds up quickly;
4) As solution we recommend to set an initial current limit to overcome the load start and then programming a current limit that enables the load acceleration till the start end. In this way you certainly will ensure a smooth start;
5) Set P111 to the current value required to start the motor;
6) Set P112 initially to 2s, i. and., to 10% of P102(20s) = 2s and then increase it gradually;
7) The motor must run as soon as it is enabled;
8) Set P110 with current limit that maintains the motor accelerating.

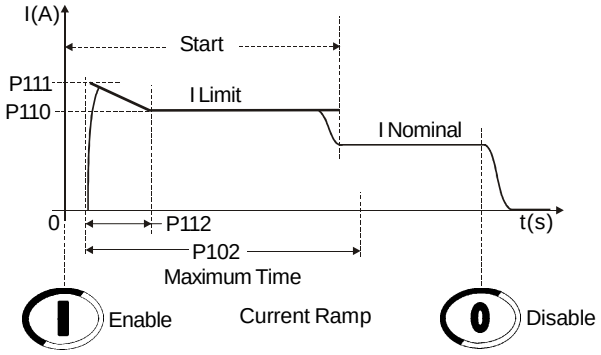

Figure 7.5 *– Starting with current ramp and initial higher current*

NOTES!

1) If the current limit is not reached during the starting, the will motor starts immediately.
2) P401 setting must be according to current of the used motor;
3) Alow Current Limit results in too low torque for the motor start. Always maintain the motor always running after it has been enabled;
4) If errors are detected during the motor start, check all connections of the Soft-Starter to the power line, the motor connections, the voltage levels of the power line, the fuses, circuit-breakers and disconnecting switches.

7.1.4 Starting by Current Ramp (P202=4)

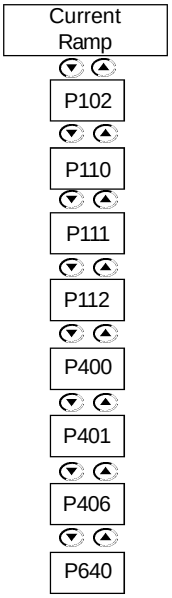

1) To start the motor with current ramp you must apply load on the motor. No-load tests can be done by voltage ramp;
2) Use this function to help starting loads that require a lower initial torque, as fans and blowers;
3) When such a load is started with fixed current limit, you can note that the motor starts the load and then it speeds up;
4) As solution we recommend setting a lower initial current to only run the load and the increase the current limit gradually until the end of the start. In this way you will certainly ensure a smooth start;
5) Set P111 to the current value required to put the motor in movement only;
6) Set P112 initially to 75% of P102(20s) = 15s and then increase it gradually;
7) The motor must run as soon as it is enabled;
8) Set P110 with current limit that maintains the motor accelerating;
9) The motor must accelerate till the start end.

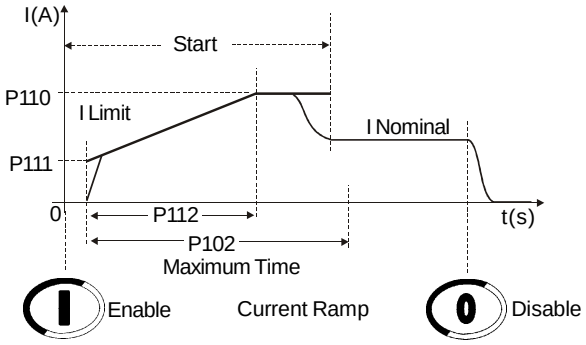

Figure 7.6 *– Starting with current ramp and initial lower current*

NOTES!

1) If the current limit is not reached during the starting, the motor will start immediately.
2) P401 must be according to current of the used motor;
3) Current Limits that are too high result in torques that are too low for the motor start.
   Always maintain the motor running after it has been enabled;
4) If errors are detected during the motor start, check all connections of the Soft-Starter to the power line, the motor connections, the voltage levels of the power line, the fuses, circuit-breakers and disconnecting switches.

7.1.5 Starting with Pump Control (P202=2)

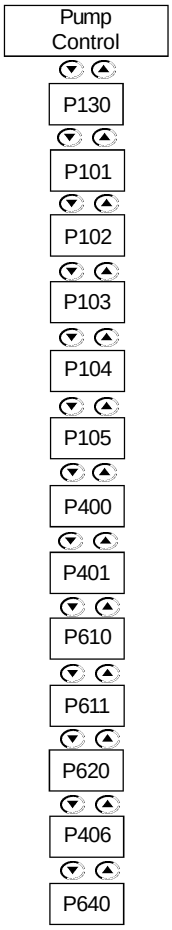

1) To start with pump control a load is necessary. Tests without a load can be done with voltage ramp;
2) The parameter setting depends mainly of the types of hydraulic installations. Thus we recommend to optimizing factory settings, if possible.
3) Check if the motor rotation direction is an indicated on the pump frame. If not, connect the phase sequence as indicated at P620;

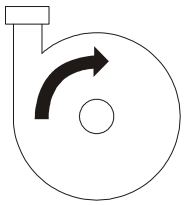

Figure 7.7 *– Direction of rotation of a hydraulic centrifugal pump*

4) Set the initial voltage - P101 – so the motor starts smoothly as soon as it is enabled.
5) Set the acceleration time according to its application, i. and., that the motor is able to start the load smoothly, but the required acceleration is not exceeded. If acceleration times are set too long, this may result in vibration of harmful motor overheating;
6) To check the correct starting process, always use a manometer in the hydraulic installation. Pressure increase should not result in sudden oscillations. Thus the pressure increase should be as linear as possible;

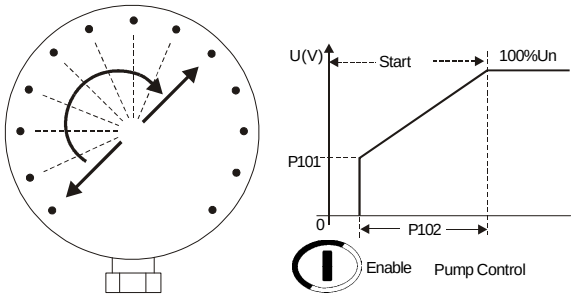

Figure 7.8 *– Manometer showing pressure increase*

7) Program the voltage step during the deceleration process only when no pressure drop is detected at the deceleration begin. With this deceleration voltage step you can improve the pressure drop during the deceleration process;
8) Set the deceleration time according to the application, i. and., ensuring that the pump stops smoothly within the expected limits. The set of excessively long times may result in vibrations or harmful motor overheating;

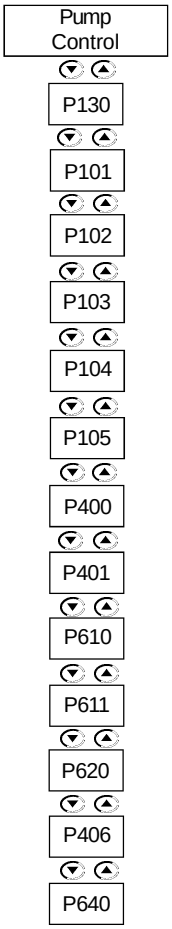

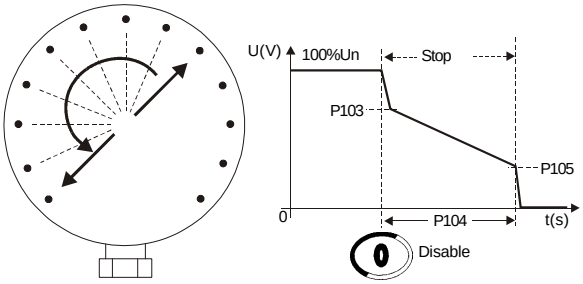

Figure 7.9 *– Manometer showing the pressure drop*

9) Generally, the current increases at the end of the deceleration ramp and in this case the motor requires more torque to achieve a smooth water flow stop. When the motor has already stopped, but is still enabled, the current will increase too much. To prevent this condition, set P105 to a value that as soon it stoop it is also disabled;
10) Set P610 and P611 to current and time levels that prevent the hydraulic pump from running without a load.

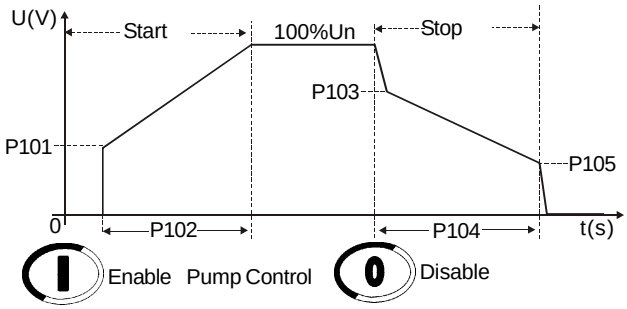

Figure 7.10 *– Start with pump control*

NOTES!

1) P400 and P401 must be set according to the line voltage and the rated current of the used motor used;
2) If the hydraulic piping is not fitted with manometer, the hydraulic rams can be noted at the pressure relief valves;
3) Please consider, that sudden line voltage drops results in motor torque drops. Thus, ensure that the power supply line characteristics are within the characteristics required for motor operation;
4) If errors are detected during the motor start, check all connections of the Soft-Starter to the power line, the motor connections, the voltage levels of the power line, the fuses, circuit-breakers and disconnecting switches.

7.1.6 Starting with Torque Control (P202=3)

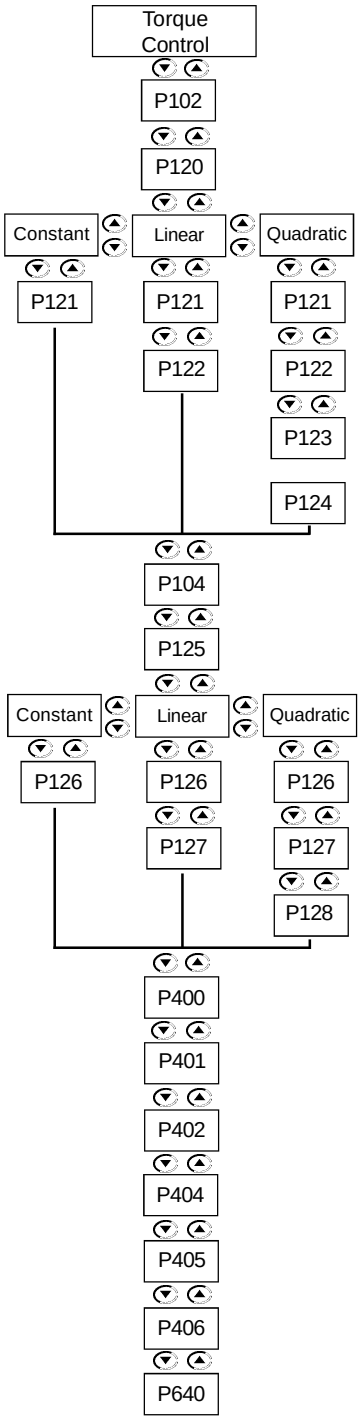

1) The torque control of the Soft-Starter SSW-06 demonstrates excellent performance during motor and load starts;
2) This control is available in a form to facilitate and to adjust the type of control to the type of load;
3) See below some recommendations on how to program and set this type of control.

NOTES!

1) To start with pump control a load is necessary. Tests without a load can be done with voltage ramp.

2) If the torque limits are not reached during the start, the motor will start immediately.

3) Only use the control type and/or torque control type you are able to set. Always select the control type that is easier to set, considering the load characteristics;

4) When heavy loads are started, always select the start by current limit. In this way you can set the energy consumption during the start by considering the power line capacity;

5) All motor parameters must be set according to the motor nameplate, P400 to P406;

6) Torque limits that are too low do not supply enough torque to start the motor;

7) Low torque limits are also very sensitive to motor temperature oscillations, for instance when load is started with cold or hot motor;

8) Low torque limits are also very sensitive to load changes, for instance, oils, greases and relief valves have different resistant torques in relation to the motor start when they are hot or cold;

9) Always maintain motor running after is has been enabled, indifferent if it has been started cold or hot;

10) The motor manufacturer supplies the maximum torque developed by the motor, during the starting or at full load. The Soft-Starters can only limit these this data;

11) If errors are detected during the motor start, check all connections of the Soft-Starter to the power line, the motor connections, the voltage levels of the power line, the fuses, circuit-breakers and disconnecting switches.

7.1.6.1 Loads with constant torque (P202=3 and P120=1 point)

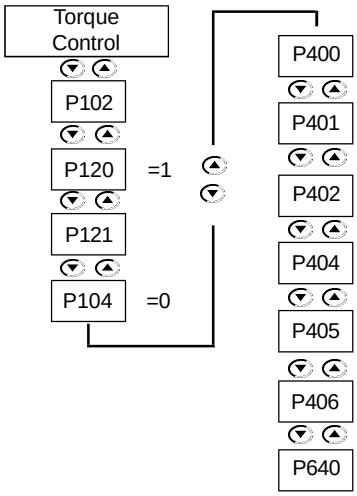

1) Set P121 as percent of the rated motor torque, necessary for the motor + load during running process;
2) Set P102 to the time required for the motor start. Firstly program short times: 10 to 15s;
3) With the torque control you can start the load smoothly within short starting times due to the linearity of the start speed ramp.

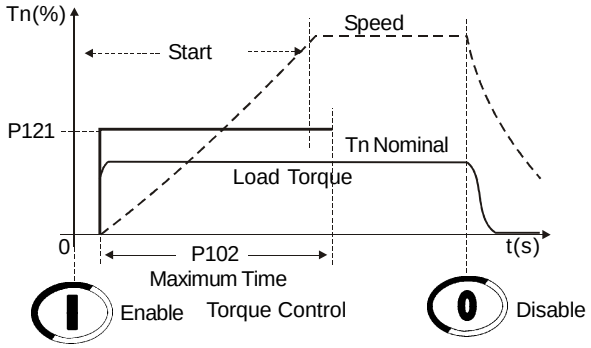

***Figure7.11** – Start with constant torque control - 1 point*

7.1.6.2 Loads with initial high torque (P202=3 and P120=3 points)

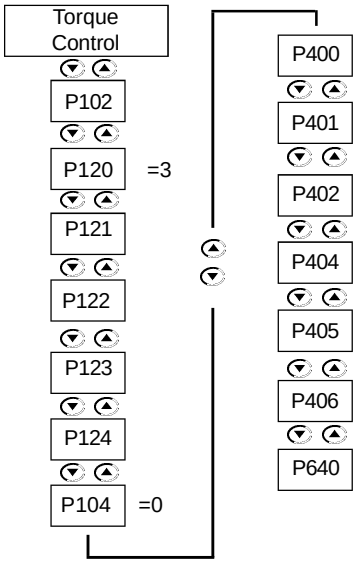

1) Through this function you can achieve a smooth and linear starting ramp. This function is very useful for driving belt conveyors;
2) Through the load curve you can set a starting torque 10% to 20% higher than the load torque for each one of the points P121, P123, P122 and the times at P102 and P124;
3) For the first start you can use a speed measuring instrument, thus ensuring the desired acceleration or the desired speed curve;
4) If no load curves are available, you can apply a similar method as the current ramp method. Also the torque limit, P120=1, can be used for executing the first start-ups and afterward changing to this function.

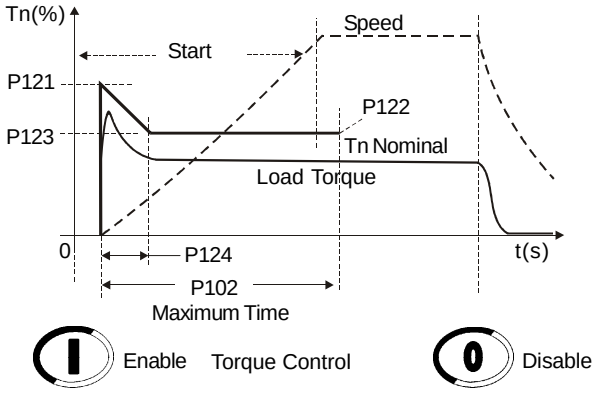

***Figure 7.12** – Starting with quadratic torque control, 3 points, with higher initial load*

7.1.6.3 Loads with constant torque and S speed curve (P202=3 and P120=3 points)

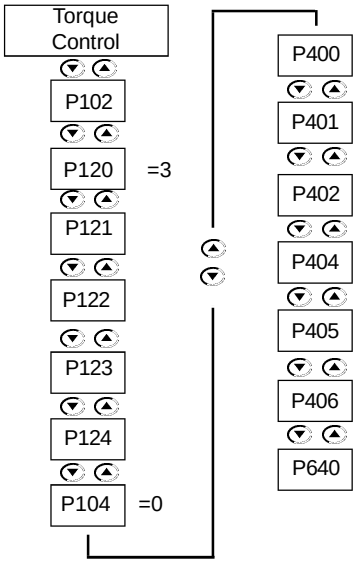

1) Through the load curve you can set the torque 10% to 20% higher than the load torque for the initial and the end points, P121 and P122, are 30% to 40% higher than load torque for the middle point P123;
2) Maintain P124 between 45% to 55% and set P102 according to the starting time;
3) For the first start you can use a speed measuring instrument, thus ensuring the desired acceleration or the desired speed curve;
4) If no load curve is available, but you are sure that the torque is constant, you can use the torque limit, P120=1 for executing the first start-ups and changing to this function afterwards.

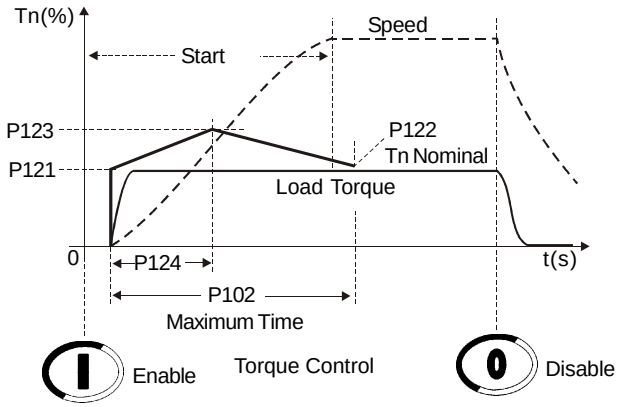

Figure 7.13 *– Starting with quadratic torque control, 3 points, with constant load*

7.1.6.4 Loads with quadratic torque and S speed curve (P202=3 and P120=2 points)

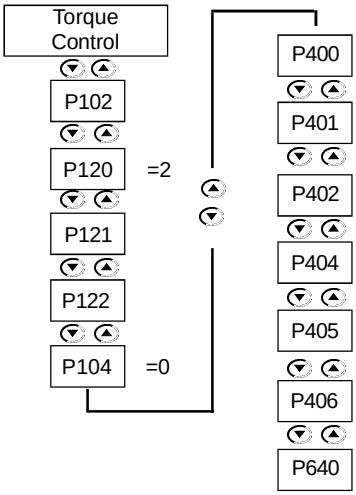

1) Through the linear torque ramp you can obtain a speed curve very similar to a S-curve with quadratic load, but not very steep;
2) Through the load curve you can set the torque 10% to 20% higher than the load torque for the initial point P121, and 20% to 30% than the load torque for the end point, P122;
3) If no load curves are available, proceed as follows:
3.1) Set P121 to the required torque to run the motor + load;
3.2) Set P122 to 110% to 130% of the rated motor torque;
3.3) First set P102 firstly to low values, 10s to 15s and then increase these values.

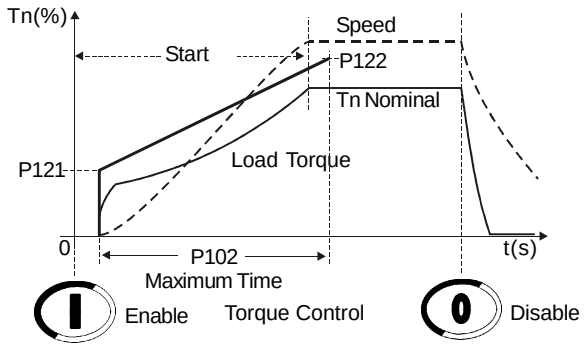

Figure 7.14 *– Starting with linear torque control, 2 points, quadratic load*

7.1.6.5 Loads with quadratic torque and linear speed curve (P202=3 and P120=3 points)

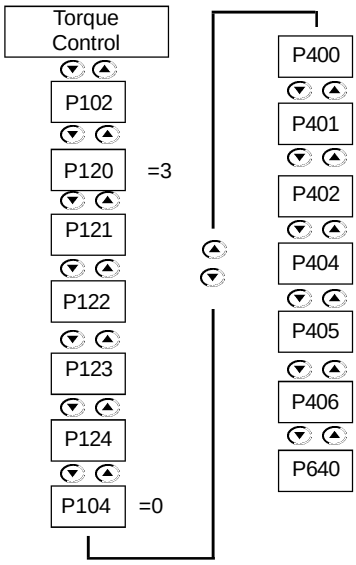

1) Through a steep quadratic load you can set an intermediate point for improving the linearity of the start speed curve;
2) Through the load curve you can set the torque 20% to 30% higher than the load torque for all points P121, P123 and P122 and set P124 as a percent of the time for the intermediate point
3) If no load curves are available, set it initially with a linear torque, P120=2 points, and afterward set the intermediate time and torque.

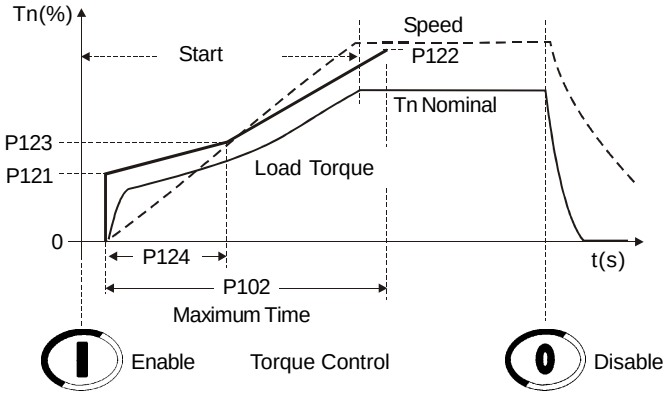

Figure 7.15 *- Starting with quadratic torque control, 3 points, quadratic load*

7.1.6.6 Loads with quadratic torque and higher initial torque (P202=3 and P120=3 points)

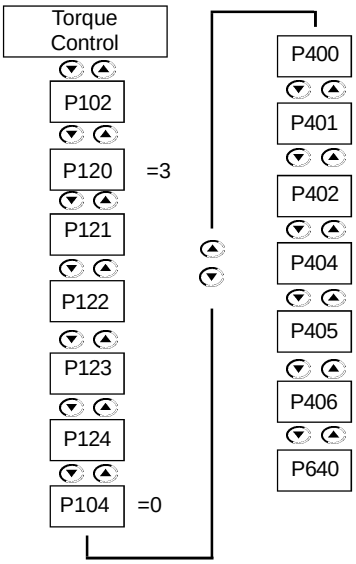

1) With a very steep quadratic load, very high initial torque, you can set an intermediate point for improving the linearity of the start speed curve;
2) Through the load curve you can set the torque 20% to 30% higher than the load torque for all points P121, P123 and P122 and set P124 as a percent of the time for the intermediate point;
3) If no load curves are available, set it initially with linear torque, P120=2 points, and afterward set the intermediate time and torque.

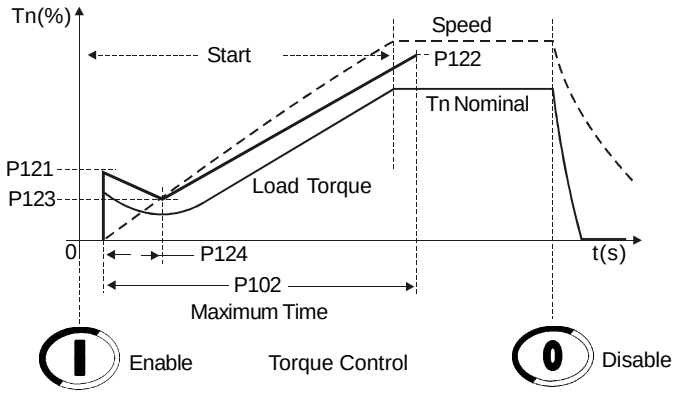

Figure 7.16 *- Starting with quadratic torque control, 3 points, quadratic load with higher initial torque*

7.1.6.7 Hydraulic pump load type (P202=3)

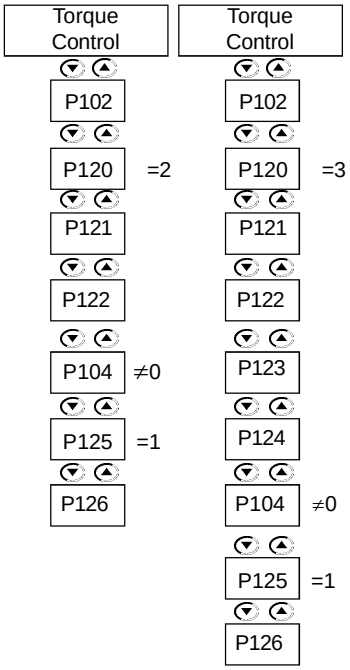

Starting (P120=2 or P120=3):

1) Before any setting, carefully read carefully the steps described in Starting with Pump Control, item 7.1.5;
2) If the pump control does not meet your requirements our if a control with better performance is desired, use the torque control;
3) With a linear torque ramp you can obtain a speed curve very similar to the S-Curve with quadratic loads, as centrifugal pumps;
4) Through the load curve you can set the torque 10% to 20% higher than the load torque for the initial point P121, and 20% to 30% higher than the load torque for the end point, P122;
5) Even when the load curve is used, we recommend executing a setting at the application field. For this, proceed as follows:

5.1) Set P121 to the torque required for the running pump;
5.2) Set P122 to 110% to 130% of the rated motor torque;
5.3) Set P102 initially to lower values, 10s to 15s, then increase this setting.

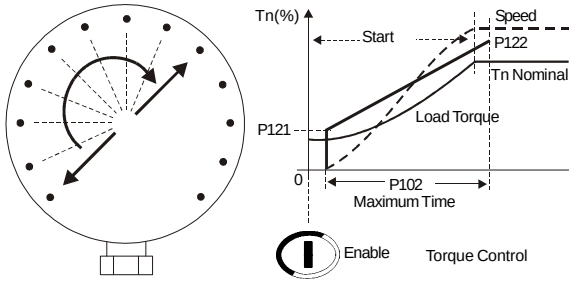

Figure 7.17 *– Manometer showing the pressure increase, linear torque*

6) If the load has a higher initial torque, could be used the quadratic torque (P120=3 points);

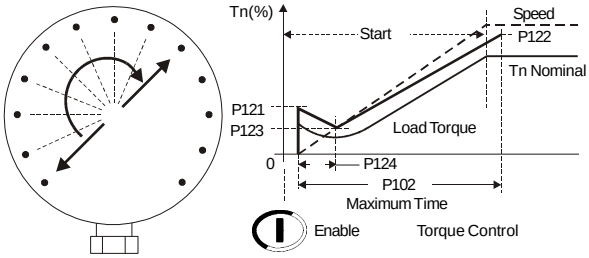

Figure 7.18 *– Manometer showing the pressure increase, quadratic torque*

7) The main purpose of the two above mentioned cases is maintaining the pressure ramp as linear as possible, increasing it gradually;
8) As already described in the pump control, the use of a measuring instrument is required for measuring this pressure and so obtaining the best setting;

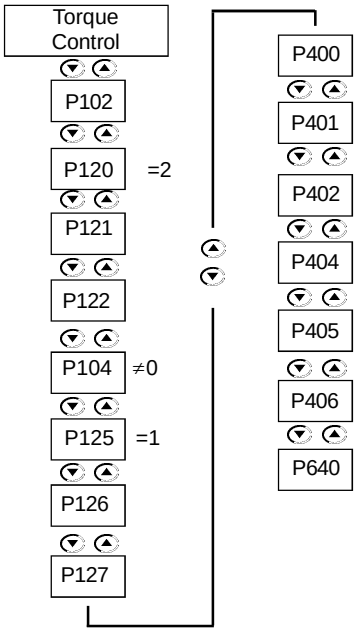

Stopping (P124≠0 and P125=1):

1) In most applications only the constant toque control can be used for pump stopping, 1 point=constant;
2) This method is used for water columns that are not very high;
3) Set P126 initially to the same value of P121, provided it is correct;
4) Set P126 in such a way that at the end of the pump stopping process the motor is not still enabled;
5) As soon as the pump is disabled, a gradual pressure drop should be noted without significant pressure oscillation, mainly at the end of the stop, when the retaining valve is closed.

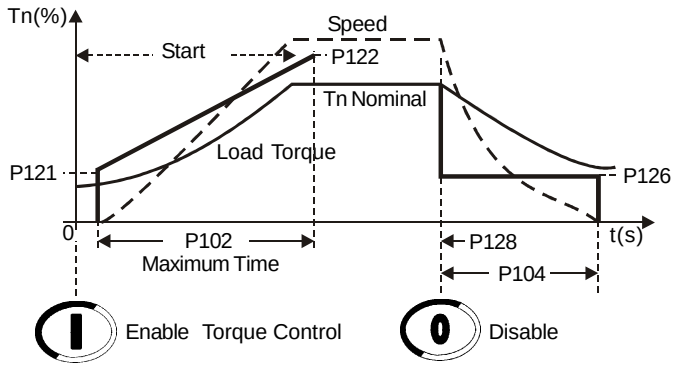

Figure 7.19 *– Hydraulic pump stopping with constant torque, 1 point*

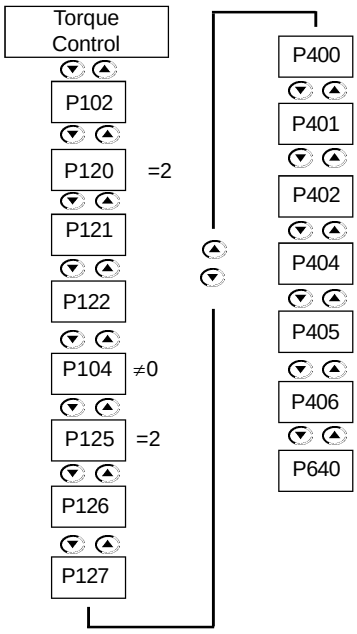

Stopping (P124≠0 and P125=2):

1) Linear deceleration torque, 2 points=linear;
2) Applied to high water columns;
3) At first you can set P126 for 10% to 15% lower than the value of P121, provided this value is correct;
4) Set P127 so that when the beginning of the stopping process, the pressure decreases gradually and no sudden pressure oscillation occurs;
5) Set P126 so that at the end of the pump stopping process the motor is not still enabled.

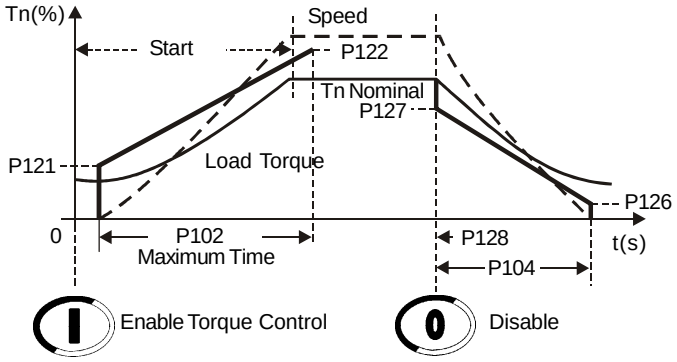

Figure 7.20 *– Hydraulic pump stopping with linear torque, 2 points*

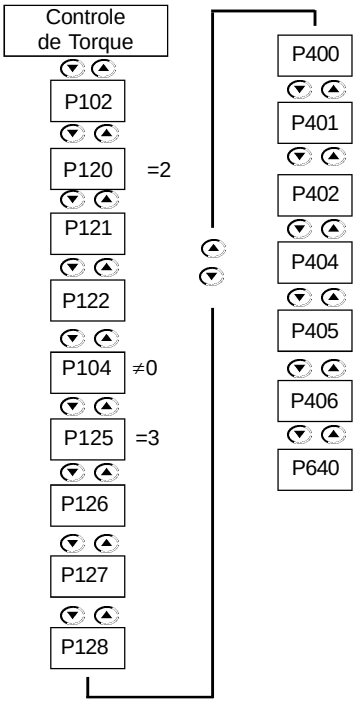

Stopping (P124≠0 and P125=3):

1) Quadratic deceleration torque, 3 points=quadratic;
2) Applied to high water columns with high pressures;
3) This control is used when it is difficult to achieve a gradual pressure drop without sudden pressure oscillations, mainly at the start of the stopping process;
4) The best way to perform this is to use the load curve as a base and set the 3 points 10% to 15% lower;
5) Set P128 initially to 50%;
6) Set P127 so that at the beginning of the stopping process, the pressure decreases gradually and no sudden pressure oscillation occurs;
7) Set P126 so that at the end of the pump stopping process the motor is not still enabled.

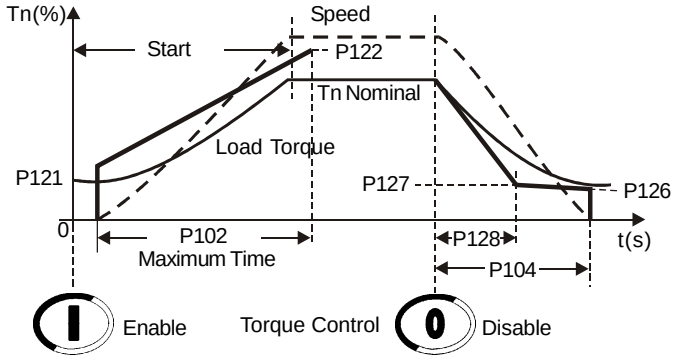

Figure 7.21 *– Hydraulic pump stopping with quadratic torque, 3 points*

8) If the load shows a higher initial torque, then use the quadratic torque control (P120=3 points).

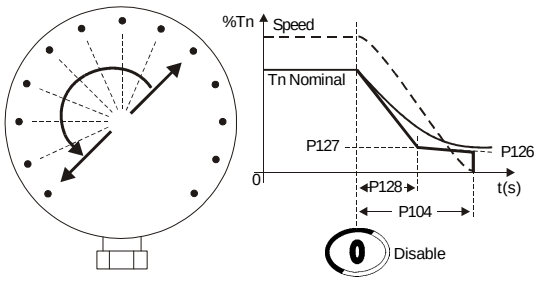

Figure 7.22 *– Manometer showing the pressure drop, torque control*

NOTES!

1) The main purpose of the torque control types applied to the stopping process is to maintain the drop in the pressure ramp as linear as possible, decreasing the pressure gradually and thus preventing sudden pressure oscillation, at the beginning, middle and at the end of the stopping process;
2) As already described in the pump control, the use of a measuring instrument is required to measure the pressure and obtain the best setting;
3) Remember: constant torque control is suitable for the greatest number of applications and its use is very easy.

7.2 PORTECTIONS AND PROGRAMMING

7.2.1 Thermal Classes

7.2.1.1 Suggestions about thermal class setting

1) Initially start from the standard thermal class, sometimes, but without heating the motor excessively.
2) Determine the correct starting time. Find an average of the current through the P002 during the starting time. One can find a current average for any kind of starting control.

For example:
When an 80A motor is started by voltage ramp, the current at P002 starts at 100A and increases to 300A and after 20s drops to the rated current.
(100A+300A)/2 = 200A
200A/80A = 2.5 x In of the motor
then: 2.5 x In @ 20s.

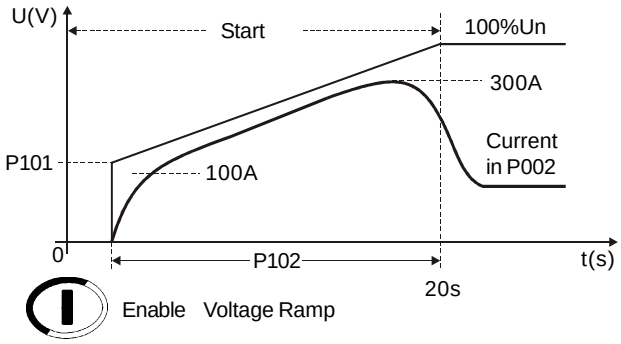

Figure 7.23 *– Typical current curve when started by voltage ramp*

3) Use this time to find the minimum class necessary to start a cold motor according to the descriptions of the P640 in chapter 6;

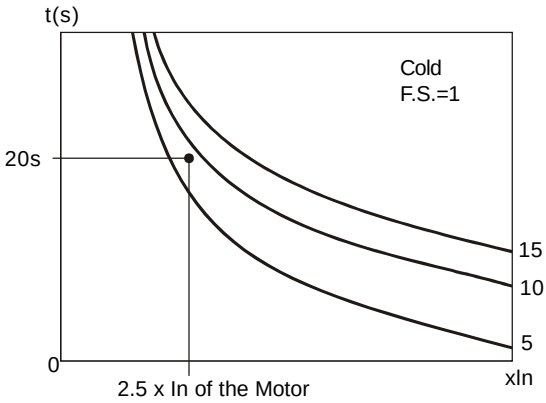

Figure 7.24 *– Determining the minimum thermal class with cold motor*

Thus the minimum required thermal class for starting the motor is the Class 10. The Class 5 requires a shorter time for this current.
This Thermal Class allows motor cold start.

4) To determine the thermal class for starting the motor at running condition (hot), the motor thermal class must be known. For this we must determine the allowed locked rotor time.

NOTE!
To program the Thermal Class that your motor will withstand, the allowed locked rotor time must be available. For this data, please refer to the manufacturer catalog.

With the blocked rotor time we can find the maximum thermal class that will protect the motor for hot starter, according to the descriptions of the P640;
For example:
6,6 x In @ 6s

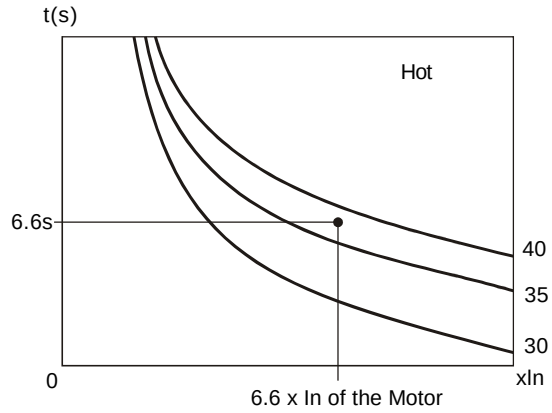

***Figure 7.25** – Determining the maximum thermal classes through the hot starting curves*

Thus, the maximum thermal class that will protect the motor is Class 35, Class 40 has too long a time for this current.
This thermal class allows the motor to start at running condition (hot), in other words, it can be started in any condition.

NOTE!
Please consider that this protection adopts WEG standard three-phase IP55 motor as a standard. Thus, if your motor is different, do not program the maximum allowed thermal class, but program the thermal class near the minimum thermal class required for the start.

7.2.1.2 Example on how to program the Thermal Class

Motor Data:
Power: 50 HP
Voltage: 380V
Rated current (In): 71A
Service Factor (S. F.): 1.00
Ip/In : 6.6
Locked rotor time:12s at hot
Speed = 1770 rpm

Data about the motor + load Starting:
Starting by Voltage Ramp, average starting current:
3 x the rated motor current during 25s (3 x In @ 25s).

1) In the chart, at cold at P640, we can find the minimum required Thermal Class that allows motor start with reduced voltage:
For 3 x In @ 25s, we select the closest higher one: Class 10.

2) In the chart, at hot in P640, we can find the maximum Thermal Class that the motor will withstand due to the locked rotor time at hot: For 6.6 x In @ 12s, we select the closest lower Class: Class 40.

Now it is known that Thermal Class 10 allows one start and Thermal Class 40 is the upper limit. Thus you must select a Thermal Class between these two Thermal Classes by considering the number of start per hour and the time interval between motor On-Off procedures.

The closer to Class 10 you select, more protected will be your motor, less starts per hour are allowed and longer time intervals between motor On-Off procedures are required.

The closer to Class 40 you select, nearer the upper motor limit you will be, thus more starts per hour are allowed and shorter time intervals between motor On-Off procedures can be used.

7.2.1.3 Time reduction when changing from cold starting to hot starting

To determine the activation times of the hot Thermal Classes, i. and., when the motor is running at rated load with current lower than or equal to 100% of the Nominal Current, use the multiplier factor shown in Table 6.34 at P640, as a percentage of the current that the motor is absorbing when running continuously.
For example:
A motor is running with 80% In and then is switched Off.
It is switched On again immediately.
The starting current is 3xIn @ 25s.
The selected Thermal Class, in the table 6.22, is the Class 10 with 33,7s @ 3xIn.
As shown in table 6.33, the correction factor for 80% In is 0.48.
The final activation time will be: 0.48 x 33.7s = 16.2s, i. and., the time is reduced at cold start from 33.7s to 16.2s at hot start. Thus, a new motor is not allowed before the thermal motor image decreases, i.and., cools down.

7.2.1.4 Service Factor

When the Service factor (S.F.) is different from 1.00, but its use is required, you can find in the chart, cold, the points for the S.F. = 1.15 and a table for S.F. = 1.15.

If you want to know the thermal protection activation time for other Service Factor (S.F.), displace the line xIn proportionally to the left.

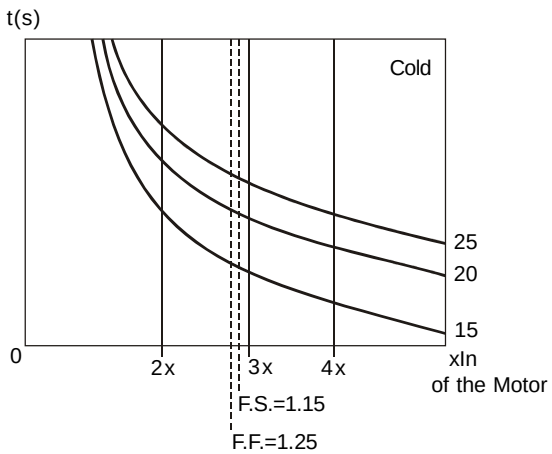

Figure 7.26 *– Using the S.F. to find new times*

DIAGNOSTICS AND TROUBLESHOOTING

This Chapter helps the user to identify and correct possible faults that can occur during the Soft-Starter SSW-06 operation. This Chapter also provides instructions about periodical inspections and cleaning requirements.

8.1 FAULTS AND POSSIBLE CAUSES

When most of the errors are detected, the motor is switched off and the error is shown on the display as EXY, XY being the error code.
For the SSW-06 Soft-Starter to return to normal operation after an error, it is necessary to reset it. This can generally be done in the following ways.
It can be reset as follows:

☑ Disconnecting and reapplying AC power (power-on reset);
☑ Pressing the 0 of the keypad (HMI) - (manual reset);
☑ Automatic reset through P206 setting (auto-reset);
☑ Via digital input: DI2 (P264 = 2) or DI3 (P265 = 2) or DI4 (P266 = 6) or DI5 (P267 = 6) or DI6 (P268 = 6).

The table below shows the reset details for each possible cause.

FAULT	DESCRIPTION OF THE ACTUATION	POSSIBLE CAUSES	RESET
E03 Undervoltage at Power Section during Operation Phase Loss or Voltage Unbalance in the Power Section during Operation Phase Loss in the Power at the Start	When the voltage between phases is lower than the programmed value during the programmed time. The motor rated voltage is used as a reference. When the voltage between phases is lower or higher during the programmed time, or when phase loss has been detected. The other two motor phases are used as reference. When there is no voltage synchronization pulse at the start.	Power supply is lower than programmed at P400 and P600. The value programmed at P604 and P605 exceeds the limits permitted for the application. Voltage drop during start. Phase loss in the power supply. Input transformers have been undersized. Actuation problems with input contactor. Fuses at input are open. Bad contact in the power supply connections. Wrong motor connection.	Power-on Manual Reset Auto-reset DIx
E04 Soft-Starter Overtemperature	When the thermostats of the heat sink act.	Panel with unsuitable cooling. Not permitted Start cycles.	Power-on Manual Reset Auto-reset DIx
E05 Motor Overload	When the times given by the curves of the programmed thermal classes exceed the programmed values.	Not permitted Start cycles. Thermal classes are programmed lower than permitted by the motor duty. Off/On intervals shorter than required for the motor cooling. The value of the thermal protection saved when switching off return when switched on again.	Power-on Manual Reset Auto-reset DIx
E06 External Fault	When the digital input programmed to No External Fault opens.	DI4...DI6 wiring is open or not connected to +24V. X1 connector of the CCS6 control board is disconnected.	Power-on Manual Reset Auto-reset DIx
E10 Error in the Copy Function	When the Keypad (HMI) has been loaded with parameters of different version as the switch.	A bid to copy the HMI parameter to the Soft-Starter with different Software version.	Power-on Manual Reset Auto-reset DIx
E15 Motor not connected	When there is no current synchronism pulse at the initial start.	Bad contact of the motor connections. Thyristors or internal By-pass relays are short-circuited.	Power-on Manual Reset DIx
E16 Overvoltage	When the voltage between phases is higher than the programmed on during the programmed time. As reference is used the rated line voltage.	Power supply is higher than programmed at P400, P602 and P603. Transformer tap selected with too high voltage. Capacitive power supply with too low inductive load.	Power-on Manual Reset Auto-reset DIx

Table 8.1 - *Detailed Fault Description*

FAULT	DESCRIPTION OF THE ACTUATION	POSSIBLE CAUSES	RESET
E24 Programming Error	When the setting of an incompatible parameter has been programmed.	Setting attempt of an incompatible parameter. See Table 4.2.	Automatic Reset after fault correction
E28 Timeout error in the telegram of the serial communication	When the Soft-Starter does not receive telegrams from the master during a time longer than has been programmed at P314.	The Timeout programmed at P314 is longer than the time programmed between the telegrams sent by the network master. The master does not send telegrams cyclically, program P314=0. When the serial communication is not used, program P314=0. For more information, please refer to the Soft-Starter SSW-06 serial communication manual.	Automatic Reset after fault correction
E29 Communication error Fieldbus inactive	When the Fieldbus communication board is active and Communication with the Master is inactive.	Communication error between the Fieldbus Network Master and the Soft-Starter SSW-06.Master configuration problem. Communication cables are not installed correctly. When the Fieldbus communication board is not being used, program P309=0. For more details, please refer to the Fieldbus communication manual of the Soft-Starter SSW-06.	Automatic Reset after fault correction
E30 Communication board error Fieldbus inactive	Soft-Starter could not be accessed the Fieldbus communication board during the initialization or during the operation.	Data exchange problems between the Soft-Starter SSW-06 and the Fieldbus communication board. Wrong configuration of the Fieldbus communication board, programmed at P309. Board connection problem. When the Fieldbus communication board is not being used, program P309=0. For more details, please refer to the Fieldbus communication manual of the Soft-Starter SSW-06.	Power-on Automatic Reset after fault correction
E31 Keypad (IHM) Connection Fault	When the electrical connection between the Keypad (HMI) and the switch has been interrupted.	Bad contact in the Keypad (HMI) connection. Electrical noise (electromagnetic interference).	Automatic Reset after fault correction
E32 Motor Overtemperature (DI6 = PTC)	When the DI6 digital input is programmed to the motor PTC input and the detector acts.	Excessive load on the shaft. Load cycle too high (large number of starts and stops per minute). Ambient temperature too high. Bad contact or short-circuit (resistance <100) in the wiring from motor thermistor to X1 terminal of the CCS6 board. P268 is wrong. Stalled motor, locked motor.	Power-on Manual Reset Auto-reset Dlx
E41 Self-Diagnosis fault during power-on	When the conversion of the input current is out of allowed range: 2,5V ±3%.	Bad electric contact in the current transformer cables or control board connection cables. A thyristor or contactor in short-circuit. Problems in the control board.	Power-on Manual Reset Dlx
E62 Too long time for the current or torque limit during the start	When the start time due to start with current limit, current ramp or torque control is longer than the time set at P102.	Time programmed at P102 is shorter than required. The programmed current limit at P110 is too low. The programmed current limit at any point of current ramp is too low. The programmed torque limit at any point of the torque control is too low. Stalled motor, locked rotor.	Power-on Manual Reset Dlx
E63 Locked Rotor at the start end	When at the end of the acceleration ramp the current is not lower than 2x the motor rated current (P401x2) before closing of the internal By-pass relay.	The motor rated current that has been programmed at P401 is wrong. The time programmed at P102 is shorter than the required to start the motor by voltage ramp. The transformer that supplies the motor may be saturated and requires too much time to recover from the starting current. Stalled motor or locked rotor. For special motor that support this working condition you can set P617=0.	Power-on Manual Reset Dlx

Table 8.1 (Cont.) - *Detailed Fault Description*

FAULT	DESCRIPTION OF THE ACTUATION	POSSIBLE CAUSES	RESET
E65 Motor Undercurrent at full voltage operation	When the current is lower than the programmed during the programmed time. Motor rated current is used as reference.	The percent value programmed as maximum acceptable undercurrent limit (P610) is lower than required for the motor and its application. In applications with hydraulic pumps which ay be operated without load.	Power-on Manual Reset Auto-reset DIx
E66 Motor Overcurrent at full voltage operation	When the current is higher than the programmed during the programmed time. The rated motor current is used as reference.	The percent value programmed as maximum acceptable overcurrent limit (P612) is lower than required for the motor and its application. Motor with instantaneous overload. Stalled motor or locked rotor.	Power-on Manual ResetAuto-reset DIx
E67 Wrong phase sequence at start begin	When the signal interruption sequence of the synchronism do not follows the **R**/1L1, **S**/3L2, **T**/5L3 sequence.	Parameter P620 has been programmed without need. Wrong phase sequence. This can be changed in another point of the power supply line.	Power-on Manual Reset DIx
E70 Undervoltage at the Electronics supply	When the supply of the control board power supply is lower than 93,5Vac.	Phase loss in the control board supply. Bad contact in the control board supply. Fuse in control board supply is open, glass fuse 5x20mm 2A with delayed action.	Power-on Manual Reset DIx
E71 Internal By-pass relay contact is open	When any problem with the contacts of the By-pass relay, internal or external, has been detected at full voltage after start.	Bad contact of the internal or extenal By-pass relay supply. Bad contact of the internal or extenal By-pass relay due to any overload. an overload P140=1 without external By-pass relay connected.	Power-on Manual Reset DIx
E72 Overcurrent before By-pass closing	When at the end of the acceleration ramp the current is not lower than 2x the rated current of the Soft-Starter (P295x2) before closing of the internal By-pass relay.	Rated Soft-Starter current has been wrong programmed at P295. The time programmed at P102 is shorter than required for the motor start by voltage ramp. Motor rated current is higher than allowed for the Soft-Starter. Stalled motor or locked rotor.	Power-on Manual Reset DIx
E74 Current unbalance	When the current of one of the phases is lower or higher during the programmed time. The other motor phases are used as reference.	Value programmed at P614 and P615 is out of range and not allowed for this application. Voltage drop in one or more phases of the power supply. Phase loss in the power supply. Input transformers have been undersized. Input fuses are open. Bad contact of the power supply connections or connections to the motor.	Power-on Manual Reset Auto-reset DIx
E75 Line frequency out of range	When the frequency is lower or higher than the limits from 42,5 to 69Hz during more than 0.5s.	When the Soft-Starter + motor are being supplied by a generator that is unable to drive the motor at rated load or is unable to start the motor.	Power-on Manual Reset DIx
E76 Undercurrent before By-pass closing	When at the end of the acceleration ramp the current is lower than 0,1x the rated current of the Soft-Starter (P295x0,1) before closing of the internal By-pass relay.	Power supply fault or thyristor fault before Bypass closing. The rated Soft-Starter current has been wrong programmed at P295. Rated motor current is lower than the minima current (P295x0.3). For tests you can set P616=0.	Power-on Manual Reset DIx
E77 By-pass relay contact is closed	When the contact of the By-pass relay, internal or external, will not opened.	Bad contact of the internal or external By-pass relay due to any overload. an overload. Short Circuit in the contact of the internal or external By-pass relay due to any overload. an overload. Short Circuit in parallel with the contact of By-pass: thyristor in short circuit, external short circuit.	Power-on Manual Reset DIx

Table 8.1 (Cont.) - *Detailed Fault Description*

NOTES!
When **E04** message is displayed (Soft-Starter overtemperature), wait a few minutes for it to cool down before it can be reset.
When **E05** message is displayed (motor overload) or **E30** (motor overtemperature), wait a few minutes for it to cool down the motor slightly before the Soft-Starter can be reset.

NOTES!
Fault Actuation Forms:

E24:
- Indicates the code in the LED display and the fault description in the LCD display (see table 4.2)
- Motor can not be started.
- Switches off the relay that has been programmed to "No Error"
- Switches on the relay that has been programmed to "With Error"

E28, E29 and E30:
- Indicates the code in the LED display;
- Indicates the code and the fault description in the LCD display;
- The actuation form can be configured at P313.

E31:
- Soft-Starter proceeds operation normally;
- No Keypad (HMI) commands are accepted;
- Indicates code in the LED display;
- Indicates the Code and the Fault description in the LCD display.

E41:
- Soft-Starter operation is not allowed (motor can not be started);
- Indicates code in the LED display;
- Indicates the Code and the Fault description in the LCD display.

E70:
- The last four faults will not be saved in the memory when the power supply is switched off (line disconnection) with stopped motor.

OTHER FAULTS:
- Relay is switched off when programmed to "No Error";
- Relay is switched on when programmed to "With Error";
- Motor is switched off, when it is enabled;
- Indicates the fault code in the LED display;
- The LCD display indicates the fault code and the fault description;
- Some data is also saved in the EEPROM memory:
  . The number of the occurred fault (the three previous faults are displaced);
  . The status of the thermal protection (motor overload);
  . The status of the time of the running/powering hours.

8.2 TROUBLESHOOTING

PROBLEM	POINT TO BE CHECKED	CORRECTIVE ACTION
Motor does not run	Incorrect wiring	1. Check the power and control connections. For example the DIx digital inputs programmed for Enabling or External Fault must be connected to +24V.
	Incorrect programming	1. Check if the parameters are properly programmed for the application;
	Fault	1. Check if the Soft-Starter is not disabled due to a Fault condition (Refer to table 8.1).
Motor does not reach rated speed	Motor stall	1. Increase the current limit level, if programmed to current limit. 2. Increase the torque limit level, if the torque control mode has been selected.
Motor speed varies (oscillates)	Loose Connections	1. Disable Soft-Starter, switch OFF the power supply and tighten all connections 2. Check if all internal connections are tightened.
Motor speed too low or too high	Motor Nameplate Data	1. Check if the used motor meets the application requirements.
Display OFF	Keypad (IHM) connection	1.Check the keypad connections to the Soft-Starter
	Check the power board X1.1, X1.2 and PE	1. Rated supply voltage must be following: U_{min} = 93.5 Vac U_{max}= 253 Vac
	Blown Fuse	1. Replace the fuse of the control board.
Jerking during pump deceleration	Parameter setting of the Soft-Starter	1. Reduce the time set at P104.

Table 8.2 - *Troubleshooting of the most frequent problems*

8.3 CONTACTING WEG: TELEPHONE / FAX / E-MAIL

NOTE!
When contacting WEG for service or technical assistance, please have the following data on hand:

Soft-Starter Model:
Serial number, manufacturing date and hardware revision, as indicated on the Soft-Starter nameplate (Refer to Section 2.4);
Software Version (Refer to Section 2.2);
Information about the application and Soft-Starter programming.

For further information, training or service please contact the Technical Assistance or Distributor closest to you.

8.4 PREVENTIVE MAINTNANCE

DANGER!
Always disconnect the main power supply before touching any electrical component associated to the SSW-06 Soft-Starter

High voltages can be present even after the power supply has been disconnected. Wait at least 3 minutes for the complete discharge of the power capacitors.
Always connect the equipment frame to the protection earth (PE) at the correct point for this.

ATTENTION!
Electronic boards have components sensitive to electrostatic discharges.
Never touch the components or connectors directly. If this is unavoidable, first touch the metallic frame or use a suitable ground strap.

Never apply a high voltage test on the Soft-Starter SSW-06! If this is necessary, contact WEG.

Do not use Megohmmeter for the Thyristor testing.

To avoid operation problems caused by harsh ambient conditions, such as high temperature, moisture, dirt, vibration or premature aging of the components, periodic inspections of the Soft-Starters SSW-06 and installations are recommended. .

COMPONENT	PROBLEMS	CORRECTIVE ACTIONS
Terminal blocks, connectors	Loose screws	Tighten them (2)
	Loose connectors	
Blowers (1)/ Cooling System	Blowers are dirty	Clean them (2)
	Abnormal acoustic noise	Replace the blower
	Blower is not running	
	Abnormal vibration	
	Dust in the air filters	Clean or replace them (4)
Printed circuit boards	Dust, oil or moisture accumulation	Clean them (2)
	Smell	Replace them
Power module/ power connections	Dust, oil or moisture accumulation, etc.	Clean them (2)
	Connection screws are loose	Tighten them (2)
Power resistor	Discoloration	Replace it
	Smell	

Table 8.3 *- Periodic Inspections after Start-up*

Notes:
(1) It is recommended to replace the blowers after each 40,000 hours of operation;
(2) Check the capacitors every six months. It is recommended to replace them after five years of operation;
(3) When the SSW-06 Soft-Starter is stored for a long period of time, it is recommended that it be energized for 1 hour, in each interval of 1 year.
(4) Two times per month.

8.4.1 Cleaning Instructions

When it is necessary to clean the SSW-06 Soft-Starter, do so according to the following instructions:

a) Cooling system:

Remove AC power from the Soft-Starter SSW-06 and wait 3 minutes;
Remove all dust from the ventilation openings by using a plastic brush or a soft cloth;
Remove dust accumulated on the heat sink fins and from the blower blades with compressed air;

b) Electronic Boards:

Remove AC power form the Soft-Starter SSW-06 and wait 3 minutes;
Remove all dust from the printed circuit boards by using an anti-static soft brush or remove it with an ionized compressed air gun (example Charges Burtes Ion Gun (non nuclear) - reference A6030-6DESCO).
If necessary, remove the PCBs from the Soft-Starter SSW-06;
Always use a ground strap.

8.5 SPARE PART LIST

Name	Item Number	Specification	Models (Ampéres) 220-575Vac														
			85	130	170	205	255	312	365	412	480	604	670	820	950	1100	1400
			Units per Soft-Starter														
Thyristor Module	0298.0029	Thyristor Module 142A 1600V	3														
	0298.0030	Thyristor Module 180A 1600V		3													
	0303.9560	Thyristor Module 250A 1600V			3												
	0298.0031	Thyristor Module 285A 1600V				3											
Disc Thryristor	0298.0032	Disc Thyristor 490 1600V					6	6									
	0298.0033	Disc Thyristor 551A 1600V							6								
	0298.0079	Disc Thyristor 750A 1600V								6							
	0298.0080	Disc Thyristor 900A 1600V									6						
	0303.9595	Disc Thyristor 1200A 1600V										6	6	6			
	0303.7150	Disc Thyristor 1800A 1600V													6	6	
	0303.7215	Disc Thyristor 2400A 1600V															6
Fan	0400.3673	Fan 120x120mm 110V/220V					2	2	2	2	2	2	3	3			
	0400.3500	Fan 225x225mm 110V													2		
	0400.3519	Fan 225x225mm 115V													2		
	0400.3403	Fan 280x280mm 220V														2	2
Fuse-Control	0305.6198	Glass Fuse 2A 250V	1	1	1	1	1	1	1	1	1	1	1	1	1	1	1
Keypad (HMI)	417114250	Man-Machine Interface	1	1	1	1	1	1	1	1	1	1	1	1	1	1	1
CCS6	4160.1765	Control Card	1	1	1	1	1	1	1	1	1	1	1	1	1	1	1
CPS63-00	4160.1767	Source and Power Card	1	1	1	1	1	1	1								
CPS63-01	4160.1822	Source and Power Card													1	1	1
CPS64	4160.1804	Source and Power Card								1	1	1	1	1			
RCS60	4160.1768	RC Snuber Card	1	1	1	1											
RCS61	4160.1793	RC Snuber Card					1	1	1	1	1	1	1	1			
Current Transformer	0307.3020	TC 425/1,4A-2,8VA –2.5%	3														
	0307.3021	TC 650/1,24A-4,3VA –2.5%		3													
	0307.3022	TC 850/1,24A-4,7VA –2.5%			3												
	0307.3023	TC 1025/1,24A-6,8VA –2.5%				3											
	0307.3024	TC 1275/1,24A-7,5VA –2.5%					3										
	0307.3025	TC 1560/1,24A-9,1VA –2.5%						3									
	0307.3026	TC 1825/1,24A-10VA –2.5%							3								
	0307.3066	TC 2060/2A-8VA –2.5%								3							
	0307.3067	TC 2400/2A-10VA –2.5%									3						
	0307.3068	TC 3020/2A-12VA –2.5%										3					
	0307.3069	TC 3350/2A-13VA –2.5%											3				
	0307.3070	TC 4100/2A-12VA –2.5%												3			
	6434.2307	TC 4750/2A-27VA –2.5%													3		
	6434.2408	TC 5500/2A-36VA –2.5%														3	
	6434.2418	TC 7000/2A-46VA –2.5%															3
By-pass Relay	0304.1197	Relay Latching 100A – 48Vcc	3														
	0304.1198	Relay Latching 200A – 48Vcc		2	2	3	3	3	3								
By-pass Contactor	035511610	Contactor CWM105DP-SB955								3	3	3	3	3			
RC Snnuber	0301.1631	Wire Resistor 25R 50W 10%													3	3	3
	0302.4490	Polip. Capacitor 0,47µF 850V													3	3	3

* a) The 110Vca fan is used in the SSW06XXXXT2257XSH1Z-PL
b) The 220Vca fan is used in the SSW06XXXXT2257XSH2Z

Table 8.4 - *Spare Parts List*

OPTIONS AND ACCESSORIES

This chapter describes the options and accessories that can be used with the Soft-Starter SSW-06. These options and accessories are:

9.1 REMOTE KEYPAD (HMI) AND CABLES

The MMI can be assembled either from the Soft-Starter or remotely. If using the remote MMI, the frame KMR-SSW-06 (frame for remote mounting) can be used. The advantage of using the frame is the appearance (esthetic) of the remote MMI. The maximum cable length is 5m (16.40 ft). To acquire cables from WEG, see the following models.

Cable Length	WEG Part Nº
1m (3.28ft)	0307.6890
2m (6.56ft)	0307.6881
3m (9.84ft)	0307.6873
5m (16.40ft)	0307.6865

Table 9.1 *- Connection cables CAB-HMI SSW-06-X*

The keypad cable must be installed separately from the power cables, following the same recommendations as for the CCS6 control board (Refer to Section 3.2.8).
For assembling, see details in figure 9.2 and 9.3.

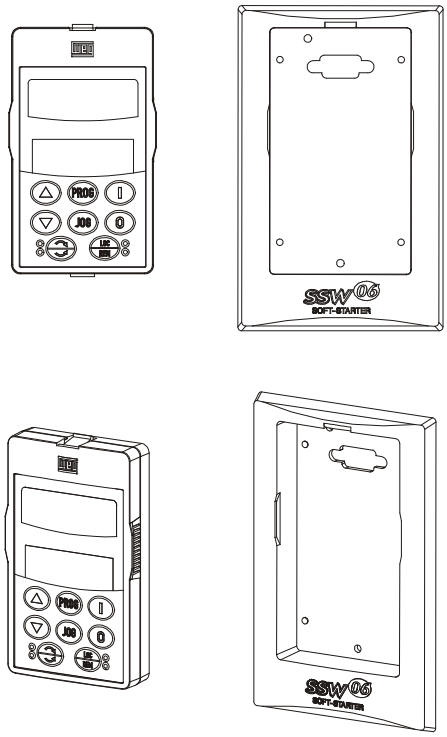

Figure 9.1 - *HMI and remote HMI frame for panel installation*

NOTE!
Due to voltage drop in the Keypad cable, do not use cables longer than 5m (16.40ft).

a) Keypad (HMI) Dimensions

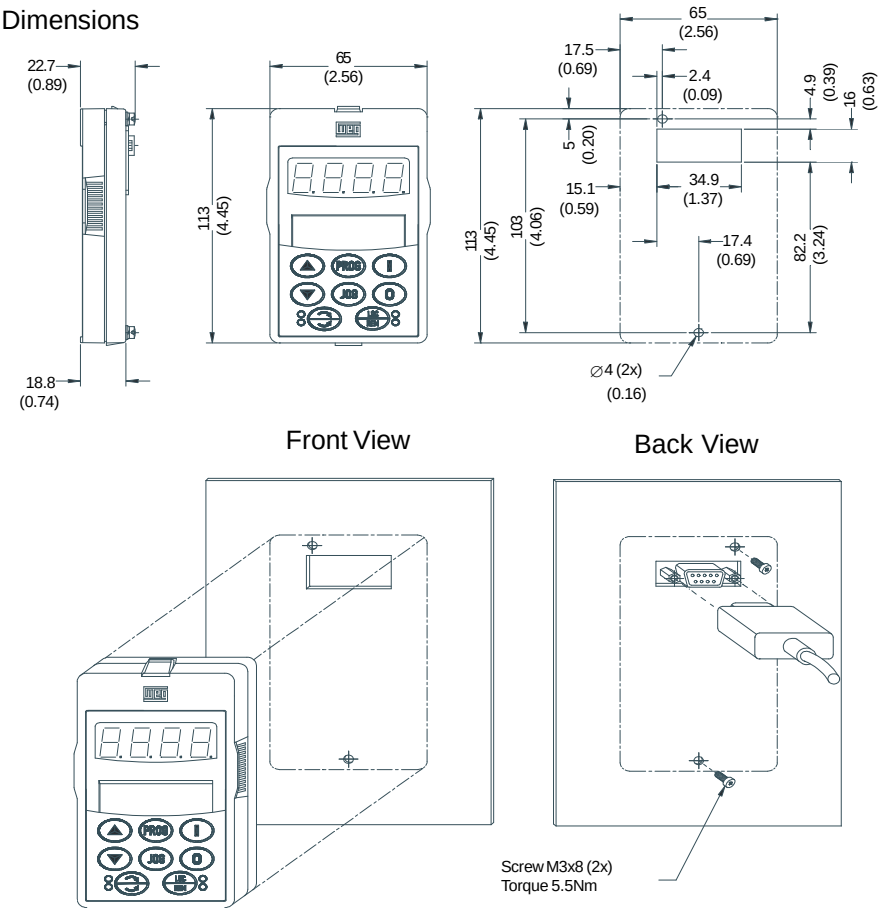

Figure 9.2 - *Dimensions in mm (in) and how to install the Keypad directly in the panel*

b) Dimension of frame with Keypad

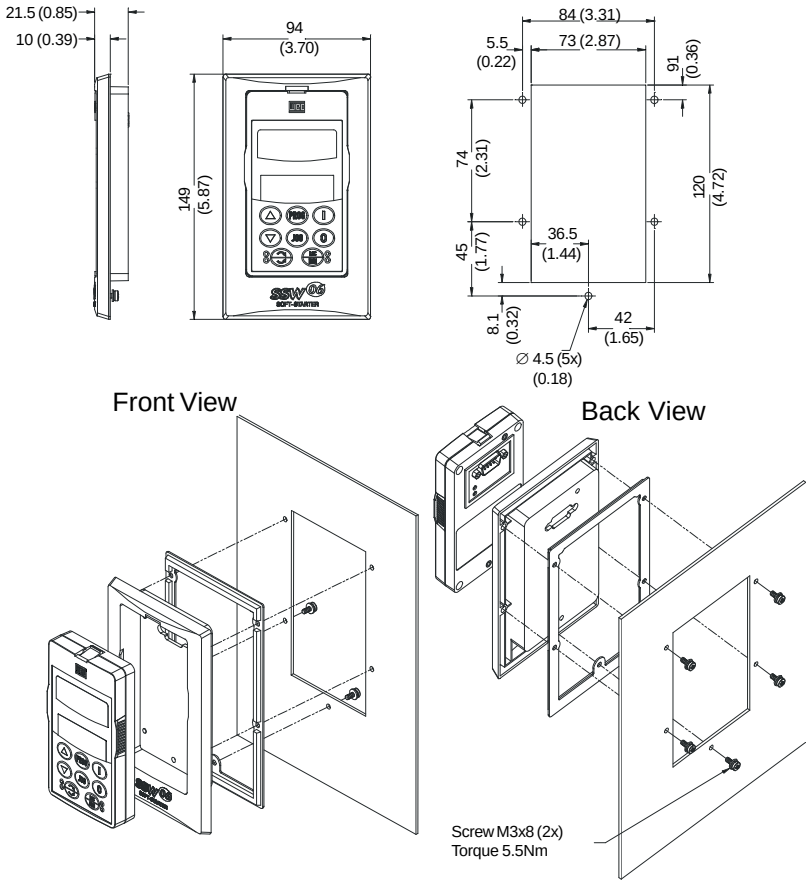

Figure 9.3 - *Dimensions in mm (in) and how to install the Keypad in the panel and frame*

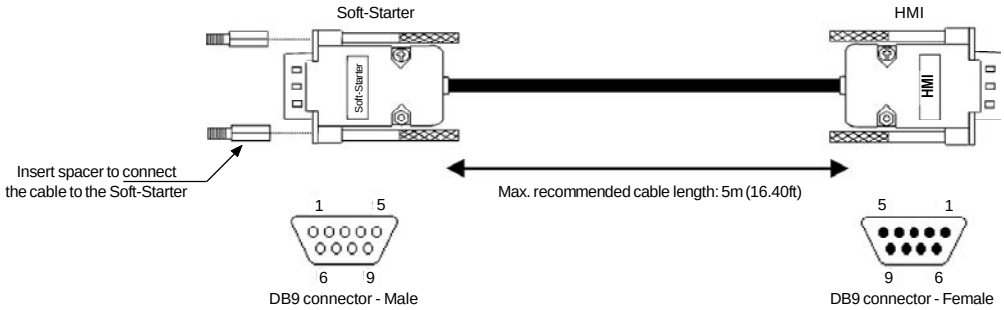

Figure 9.4 *- Cable for remote keypad connectiion*

Cable Connection	
Connection Pins Soft-Starter side	Connection Pins Keypad (HMI) side
1	1
2	2
3	3
4	4
8	8
9= SHIELD	9= SHIELD

Table 9.2 *– Coonection pins (DB9) for cables ≤ 5m (16.40ft) (the frame may be or not used)*

9.2 RS-485 for the Soft-Starter SSW-06

- ☑ When the interface RS-485 is used, the master can control several drives connected to the same bus. The protocol Modbus-RTU allows the connection of up to 247 slaves (1 slave per address), provided repeaters are also used along the bus. This interface ensures good noise immunity, allowing maximum cable length of up to 1000 m.
- ☑ There are two ways to make available the interface RS-485 in the Soft-Starter SSW-06:

9.2.1 RS-485 Communication Kit for SSW-06 (KRS-485)

- ☑ WEG Item: 417114255.
- ☑ Converter RS-232 to RS-485 with galvanic isolation.
- ☑ Connected inside the product (on the connector XC8 of the control board CCS6).
- ☑ For more details, please refer to the Serial Communication of the Soft-starter SSW-06.

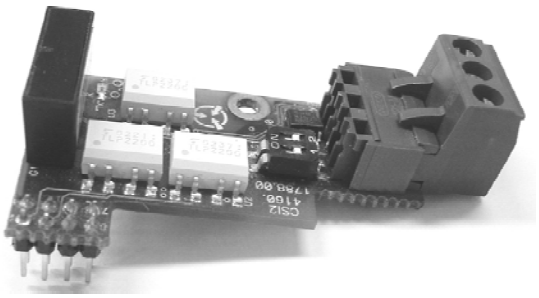

Figure 9.5 *– Optional board RS-485 for the SSW-06*

9.2.2 Optional Module MIW-02

- ☑ WEG Item: 417100543.
- ☑ Converter RS-232 to RS-485 with galvanic isolation.
- ☑ Module outside the product, connected to the interface RS-232 of the SSW-06.
- ☑ For more details, please refer to the MIW-02 Manual.

Figure 9.6 *– Optional module MIW-02*

9.3 FIELDBUS COMMUNICATION KITS

- ☑ To enable the Soft-Starter SSW-06 for the Profibus DP or DeviceNet communication, the use of a communication board required. This communication board is available as optional kit.
- ☑ Two protocols are available for the Soft-Starter SSW-06:

9.3.1 Fieldbus DeviceNet Communication Kit for SSW-06 (KFB-DN)

- ☑ WEG Item: 417114253.
- ☑ The communication protocol DeviceNet has been developed with the purpose to provide a fast, cyclic and deterministic communication between the masters and slaves.
- ☑ For more details, please refer to the Fieldbus Communication Manual.

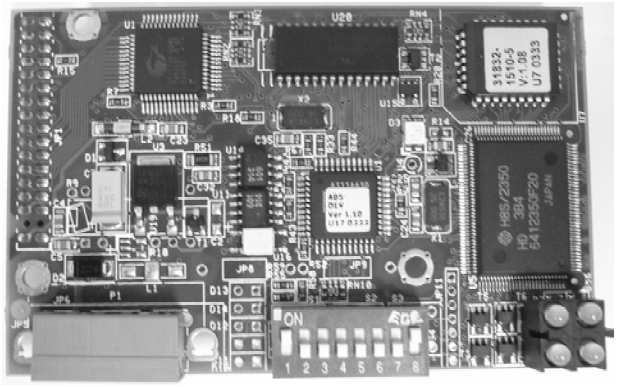

Figure 9.7 *– Board of the optional DeviceNet Kit*

9.3.2 Fieldbus Profibus DP communication kit for SSW-06 (KFB-PD)

- ☑ WEG Item: 417114252.
- ☑ The ProfibusDP communication protocol is used for interconnecting controllers and industrial equipment, such as sensors, valves, drives, bar code readers, frequency inverters, panels and operation interfaces.
- ☑ For more details, please refer to the Fieldbus Communication Manual.

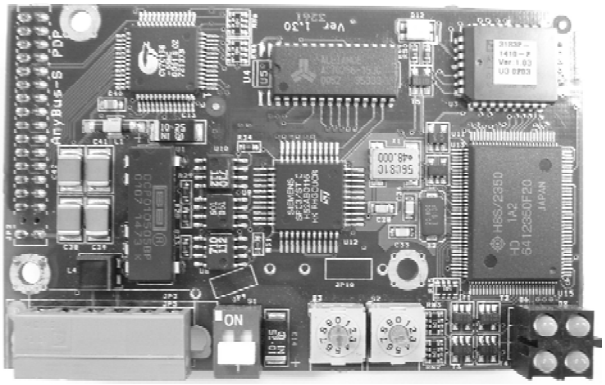

Figure 9.8 *– Board of the optional Profibus DP kit*

TECHNICAL SPECIFICATIONS

This Chapter describes the technical specifications (electrical and mechanical) of the Soft-Starters SSW-06.

10.1 CURRENTS AND RATINGS ACCORDING TO UL508

SSW-06 Model	55ºC		55ºC							
	Rated Current 3xIn @ 30s	Rated Current 4.5xIn @ 30s	220/230V		380/400V		440/460V		575V	
	A	A	hp	kW	hp	kW	hp	kW	hp	kW
SSW-06.0085	85	57	30	22	50	37	60	45	75	55
SSW-06.0130	130	87	50	37	75	55	100	75	125	90
SSW-06.0170	170	113	60	45	100	75	125	90	150	110
SSW-06.0205	205	137	75	55	100	75	150	110	200	150
SSW-06.255	255	170	100	75	150	110	200	150	250	185
SSW-06.0312	312	208	125	90	175	130	250	185	300	220
SSW-06.0365	365	243	150	110	200	150	300	220	350	260
SSW-06.0412	412	275	150	112	250	185	350	260	450	330
SSW-06.0480	480	320	200	150	300	225	400	300	500	370
SSW-06.0604	604	403	250	185	350	260	500	370	600	450
SSW-06.0670	670	447	250	185	400	300	550	410	650	485
SSW-06.0820	820	547	300	225	500	370	600	450	750	550
SSW-06.0950(1)	950	633	350	260	600	450	700	525	850	630
SSW-06.1100(1)	1100	733	450	330	700	525	800	600	1000	750
SSW-06.1400(1)	1400	933	500	370	900	670	1050	775	1350	1000

(1) Power valid for room temperature of 40ºC.

Table 10.1 *- Powers and currents for standard connection with three cables according to UL508 (Room temperature of 55ºC)*

SSW-06 Model	55ºC		55ºC							
	Rated Current 3xIn @ 25s	Rated Current 4.5xIn @ 25s	220/230V		380/400V		440/460V		575V	
	A	A	hp	kW	hp	kW	hp	kW	hp	kW
SSW-06.0085	147	98	50	37	75	55	100	75	150	110
SSW-06.0130	225	150	75	55	125	90	150	110	200	150
SSW-06.0170	294	196	100	75	150	110	200	150	300	220
SSW-06.0205	355	236	125	90	200	150	250	185	350	260
SSW-06.0255	441	294	150	110	250	185	350	260	450	330
SSW-06.0312	540	360	200	150	300	220	450	330	550	410
SSW-06.0365	631	421	250	185	350	260	500	370	650	475
SSW-06.0412	713	475	250	185	450	330	550	410	750	550
SSW-06.0480	831	554	350	260	550	410	650	485	850	630
SSW-06.0604	1046	697	450	330	700	525	800	600	1100	800
SSW-06.0670	1160	773	450	330	850	630	900	670	1200	900
SSW-06.0820	1420	947	550	410	1000	750	1150	820	1500	1200
SSW-06.0950(1)	1645	1096	650	485	1150	820	1350	1000	1750	1290
SSW-06.1100(1)	1905	1270	800	600	1350	1000	1600	1175	2000	1475
SSW-06.1400(1)	2424	1616	1000	750	1750	1290	200	1475	2500	1850

(1) Power valid for room temperature of 40ºC.

Table 10.2 *– Powers and currents for connection inside the motor delta with six cables according to UL508 (Room Temperature of 55ºC)*

NOTE!
Maximum ratings indicated in tables 10.1 and 10.3 are based on 3 x SSW-06 Soft-Starter Rated Current during 30s and 10 starts per hour (3xInSSW@30s).

10.2 CURRENTS AND RATINGS FOR IP55, IV POLE WEG MOTOR

SSW-06 Model	55ºC		55ºC									
	Rated Current 3xIn @ 30s	Rated Current 4.5xIn @ 30s	220/230V		380/400V		440/460V		525V		575V	
	A	A	hp	kW	hp	kW	hp	kW	hp	kW	hp	kW
SSW-06.0085	85	57	30	22	60	45	60	45	75	55	75	55
SSW-06.0130	130	87	50	37	75	55	100	75	125	90	125	90
SSW-06.0170	170	113	60	45	125	90	125	90	150	110	150	110
SSW-06.0205	205	137	75	55	150	110	150	110	200	150	200	150
SSW-06.0255	255	170	100	75	175	132	200	150	250	185	250	185
SSW-06.0312	312	208	125	90	200	150	250	185	300	220	300	225
SSW-06.0365	365	243	150	110	250	185	300	225	350	260	350	260
SSW-06.0412	412	275	150	110	300	220	350	260	440	315	450	330
SSW-06.0480	480	320	200	150	350	260	400	300	500	370	500	370
SSW-06.0604	604	403	250	185	450	330	500	370	600	450	650	485
SSW-06.0670	670	447	250	185	500	370	550	410	650	485	750	550
SSW-06.0820	820	547	350	260	550	410	700	525	800	600	850	630
SSW-06.0950(1)	950	633	400	300	750	550	800	600	900	670	1050	775
SSW-06.1100(1)	1100	733	450	330	800	600	900	670	1100	810	1200	900
SSW-06.1400(1)	1400	933	550	410	1000	750	1200	900	1400	1050	1500	1100

(1) Power valid for room temperature of 40ºC.

Table 10.3 *- Powers and currents for standard connection with three cables according to WEG motors*

SSW-06 Model	55ºC		55ºC									
	Rated Current 3xIn @ 25s	Rated Current 4.5xIn @ 25s	220/230V		380/400V		440/460V		525V		575V	
	A	A	hp	kW	hp	kW	hp	kW	hp	kW	hp	kW
SSW-06.0085	147	98	60	45	100	75	125	90	125	90	150	110
SSW-06.0130	225	150	75	55	150	110	175	132	200	150	250	185
SSW-06.0170	294	196	125	90	200	150	200	150	250	185	300	220
SSW-06.0205	355	236	150	110	250	185	300	220	300	220	350	260
SSW-06.0255	441	294	175	130	300	220	350	260	400	300	450	330
SSW-06.0312	540	360	200	150	350	260	450	330	500	370	550	410
SSW-06.0365	631	421	250	185	450	330	500	370	600	450	650	485
SSW-06.0412	713	475	250	185	500	370	600	450	700	525	800	600
SSW-06.0480	831	554	350	260	600	450	700	525	800	600	900	670
SSW-06.0604	1046	697	450	330	750	550	850	630	1050	775	1150	820
SSW-06.0670	1160	773	500	370	850	630	950	700	1150	820	1250	920
SSW-06.0820	1420	947	600	450	1000	750	1200	900	1400	1050	1550	1140
SSW-06.0950(1)	1645	1096	700	520	1200	900	1400	1030	1650	1200	1800	1325
SSW-06.1100(1)	1905	1270	800	600	1400	1030	1600	1175	1900	1400	2100	1550
SSW-06.1400(1)	2424	1616	1050	775	1750	1290	2000	1475	2450	1800	2650	1950

(1) Power valid for room temperature of 40ºC.

Table 10.4 *- Powers and currents for connection inside the motor delta with six cables according to WEG motors (Room Temperature of 55ºC)*

NOTE!
Maximum ratings indicated on the tables 10.2 and 10.4 are based on 3 x SSW-06 Soft-Starter Rated Current during 25s and 10 starters per hour (3xInSSW@ 25s).

10.3 POWER DATA

Supply	Power voltage AC input (R/1L1, S/3L2, T/5L3)	☑ 220V to 575 Vac: (-15% to +10%), or (187 to 632) Vac
	Frequency	☑ 50 to 60Hz (± 10 %), or (45 to 66) Hz
Capacity	Maximum number of starts per hour	☑ 10 (1 every 6 minutes) Models 85A to 820A. ☑ 5 (1 every 12 minutes) Models 950A to 1400A.
	Starting Cycle	☑ 3 x In during 30 s
Thyristors (SCRs)		☑ Maximum reverse peak voltage 1600V
Overvoltage Category		☑ III (UL 508/EN 61010)

10.4 ELECTRONICS/PROGRAMMING DATA

Supply Connector X1A (1,2)	Control Voltage	☑ 110 to 230 Vac (-15% to +10%), or (94 to 253)Vac
	Frequency	☑ 50 to 60Hz (± 10 %), or (45 to 66)Hz
	Consumption	☑ 280mA Maximum
Control	Method	☑ Voltage Ramp; ☑ Current Limit; ☑ Pump Control; ☑ Torque Control; ☑ Torque Control;
Inputs	Digitals	☑ 5 isolated digital inputs; ☑ Minimum high level: 18Vdc; ☑ Maximum low level: 3Vdc; ☑ Maximum Voltage: 30Vdc; ☑ Input Current: 11mA @ 24Vdc; ☑ Programmable functions.
	Motor Thermistor Input	☑ 1 input for motor thermistor; ☑ Actuation: 3k9Ω Release: 1k6Ω; ☑ Minimum resistance: 100Ω; ☑ PTCB referenced to the DGND through 249Ω resistor.
Outputs	Analogs	☑ 1 analog output, not isolated, (0 to +10)V, RL ≥ 10kΩ (maximum load); ☑ Resolution: 11bits; ☑ Programmable functions.
		☑ 1 analog output, not isolated,(0 to 20)mA/(4 to 20)mA, RL=500Ω/1%@10V; ☑ Resolution: 11bits; ☑ Programmable functions.
	Relay	☑ 2 relays with NO-contacts, 240Vac, 1A, programmable functions. ☑ 1 relay with NO/NC-contact, 240Vac, 1A, programmable functions.

10.4 ELECTRONICS/PROGRAMMING DATA (cont.)

Safety	Protections	☑ Overcurrent; ☑ Undercurrent; ☑ Overvoltage; ☑ Undervoltage; ☑ Phase loss; ☑ Reversed phase sequence; ☑ Overtemperature of heat sink; ☑ Motor overload; ☑ External fault; ☑ Open By-pass contact (when Soft-Starter is fitted with internal By-pass); ☑ Overcurrent before By-pass (when Soft-Starter is fitted with internal By-pass); ☑ CPU Error; ☑ Keypad (HMI) communication error. ☑ Programming error; ☑ 8 keys: enable / disable, Increment, Decrement, Direction of Rotation, Jog, Local/
Keypad (HMI)	HMI-SSW06	Remote and Programming; ☑ LCD-Display, 2 lines x 16 columns and 7 segments ☑ 4 digits LED display ☑ Led's for indication of the direction of rotation and indication on the Mode of Operation (LOCAL/REMOTE) ☑ Permits access/changing of all parameter; ☑ External mounting is possible, cables up to 5m (16.40ft) are available.

10.5 MECHANICAL DATA

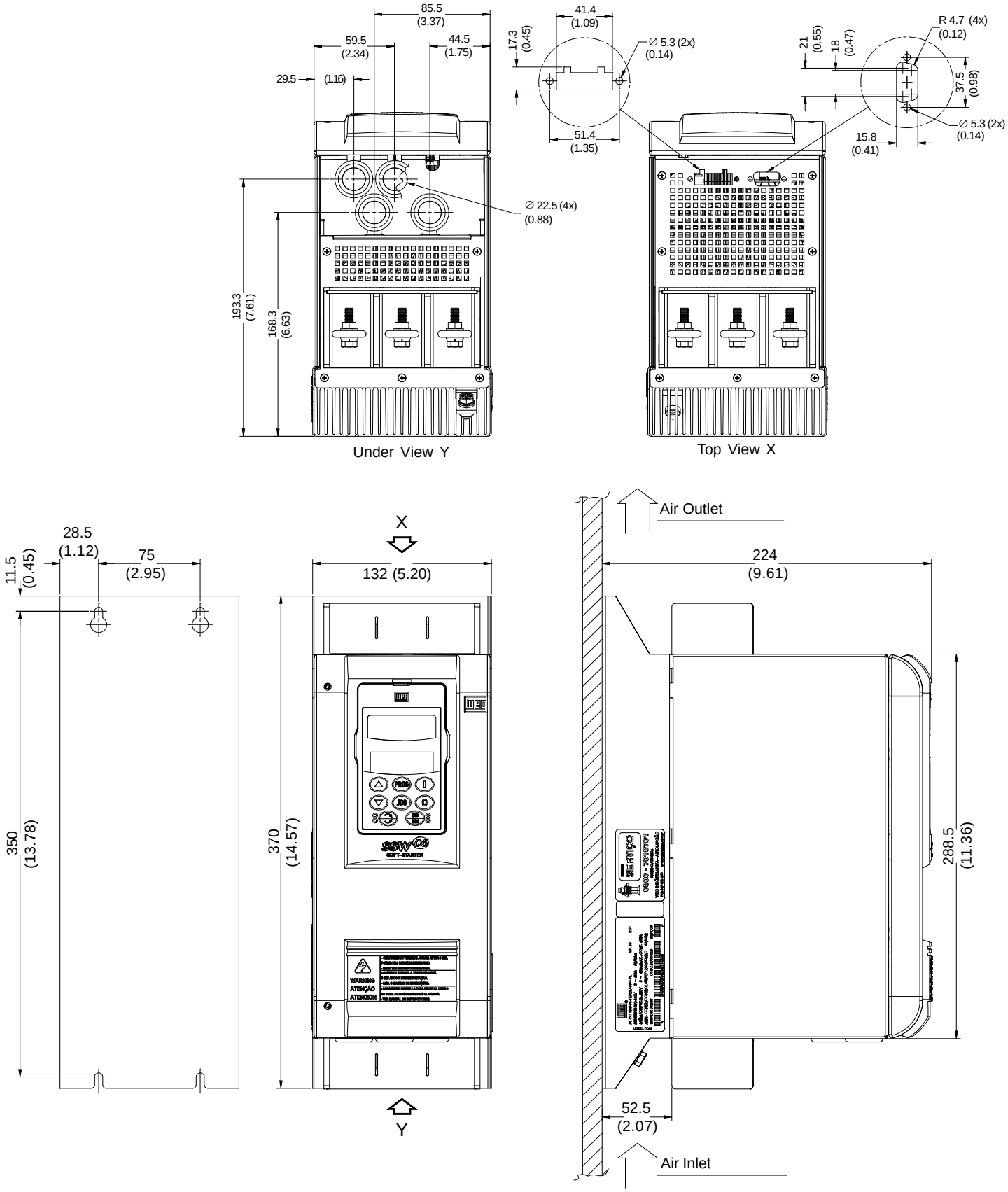

Figure 10.1 - *85A and 130A Models*

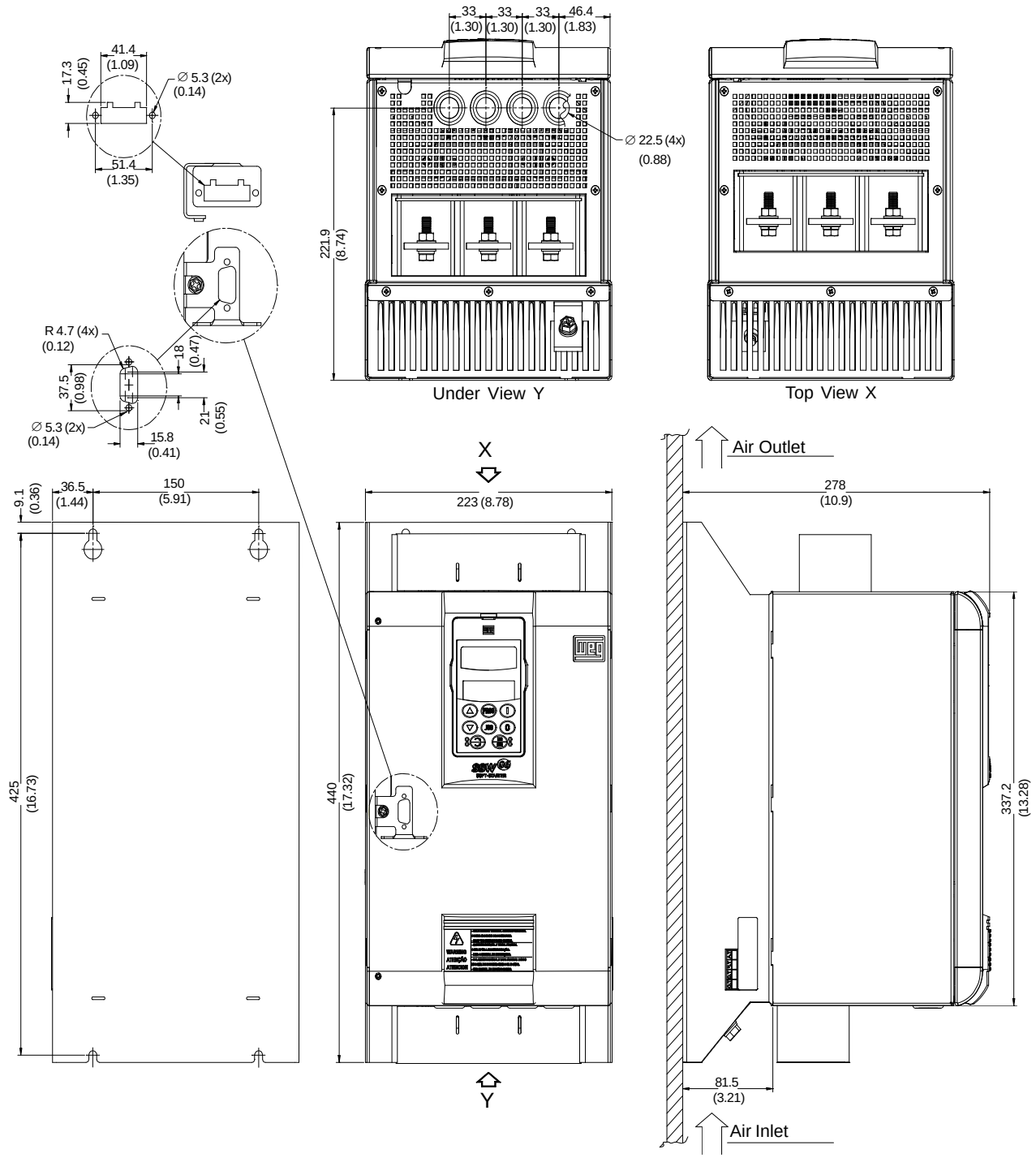

Figure 10.2 - *170A to 205A Models*

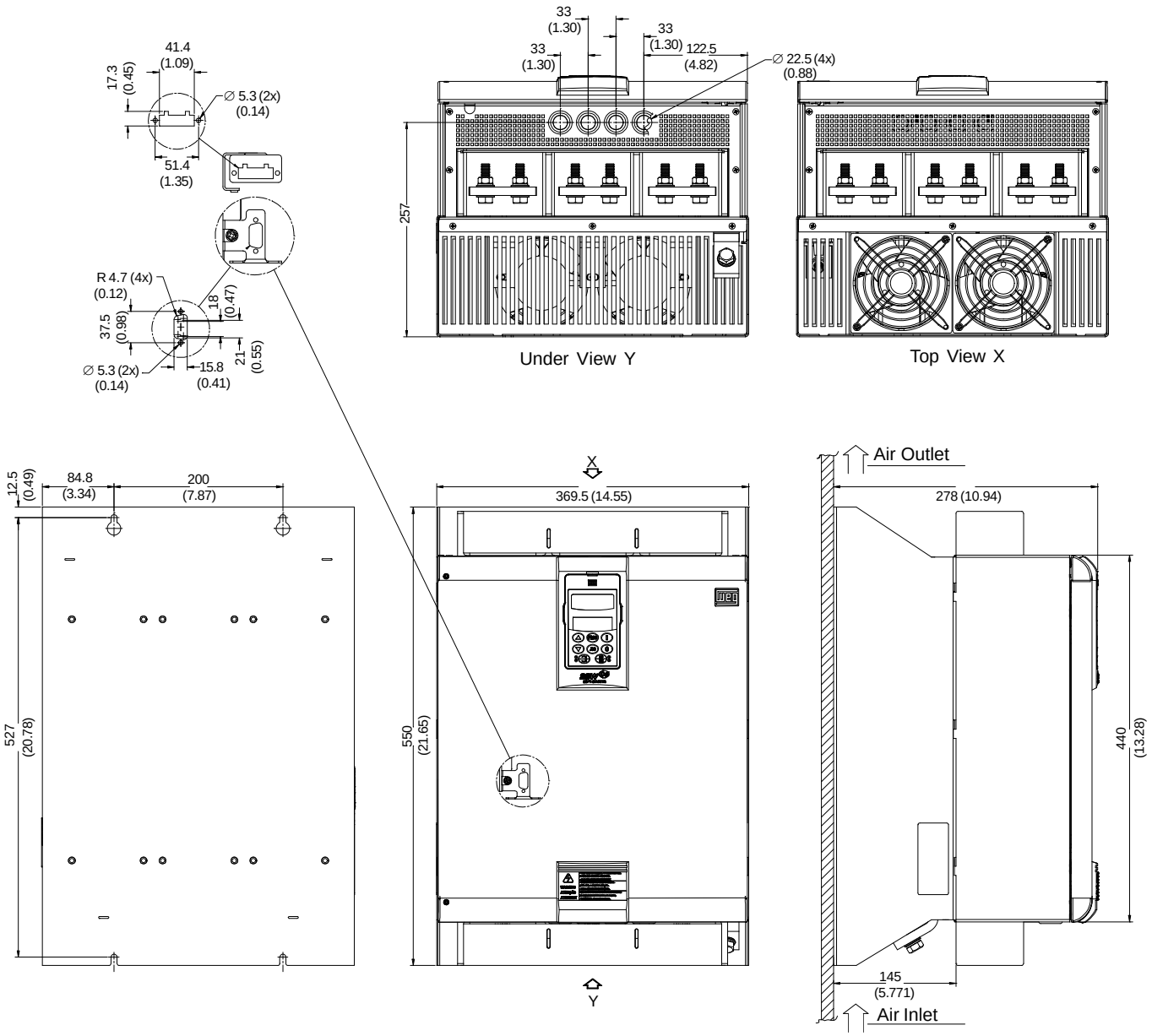

Figure 10.3 - *255A, 312A and 365A Models.*

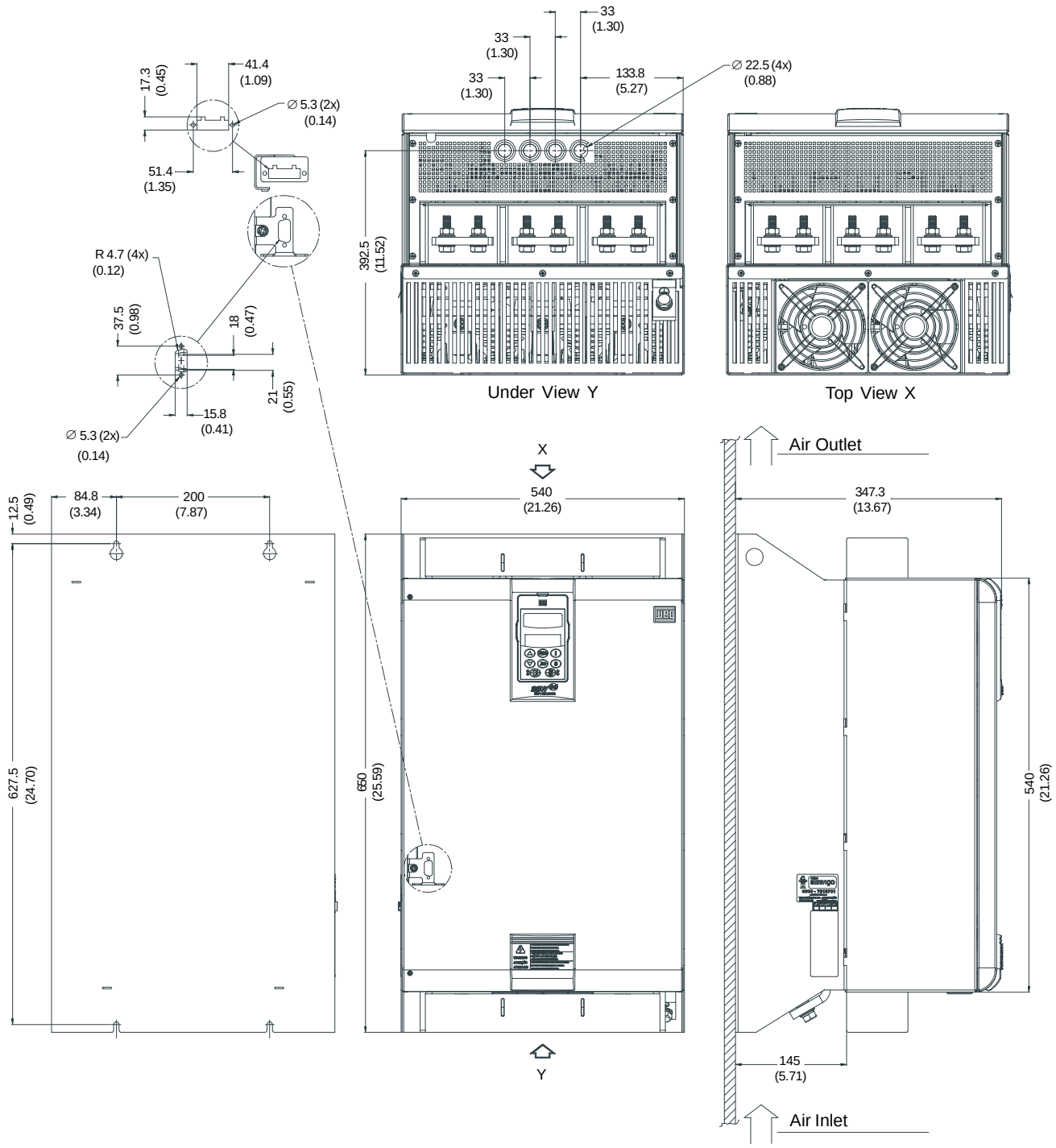

Figura 10.4 - *Models de 412A, 480A and 604A*

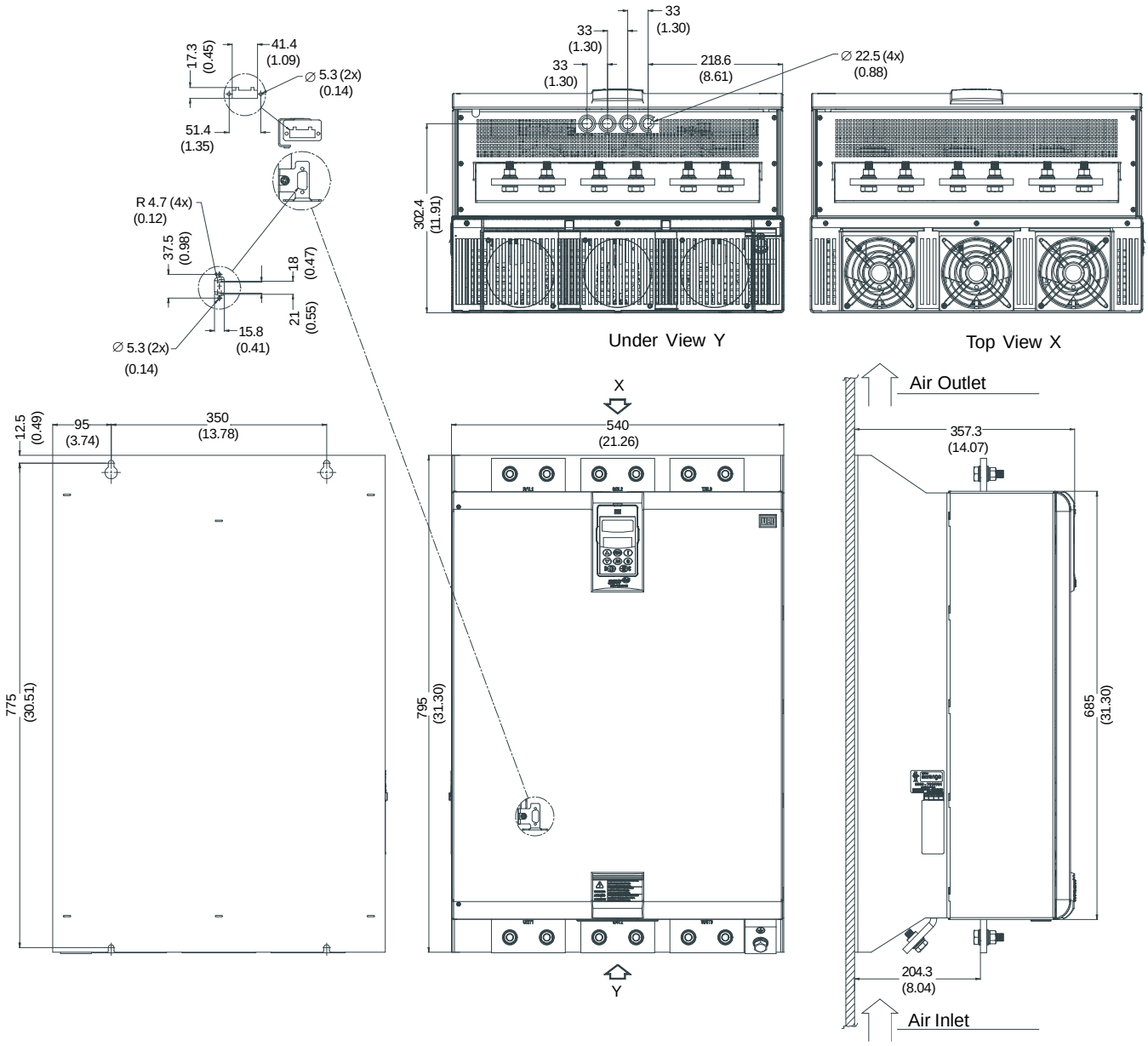

Figura 10.5 - *670A and 820A Models*

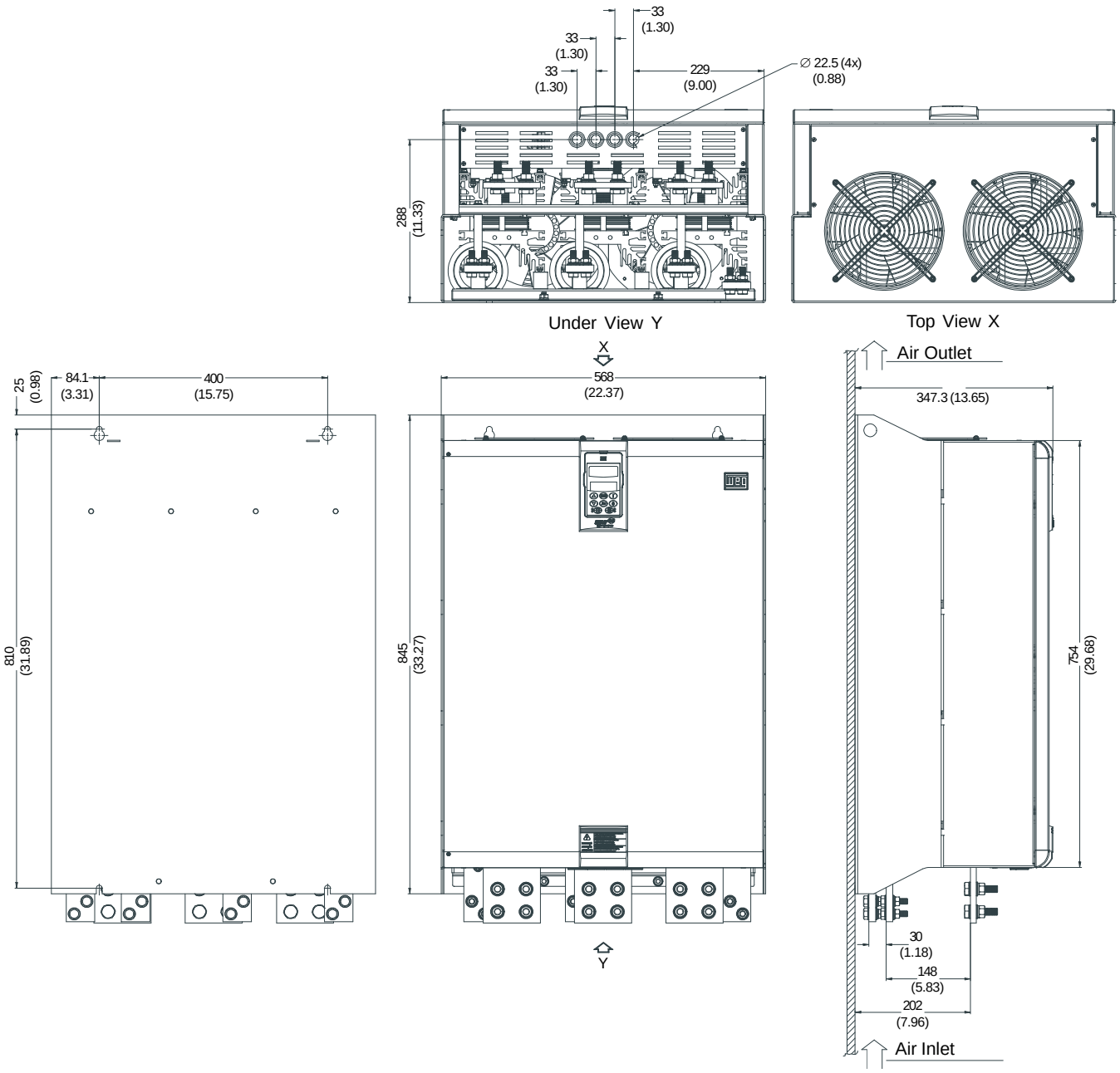

Figura 10.6 - *950A Models*

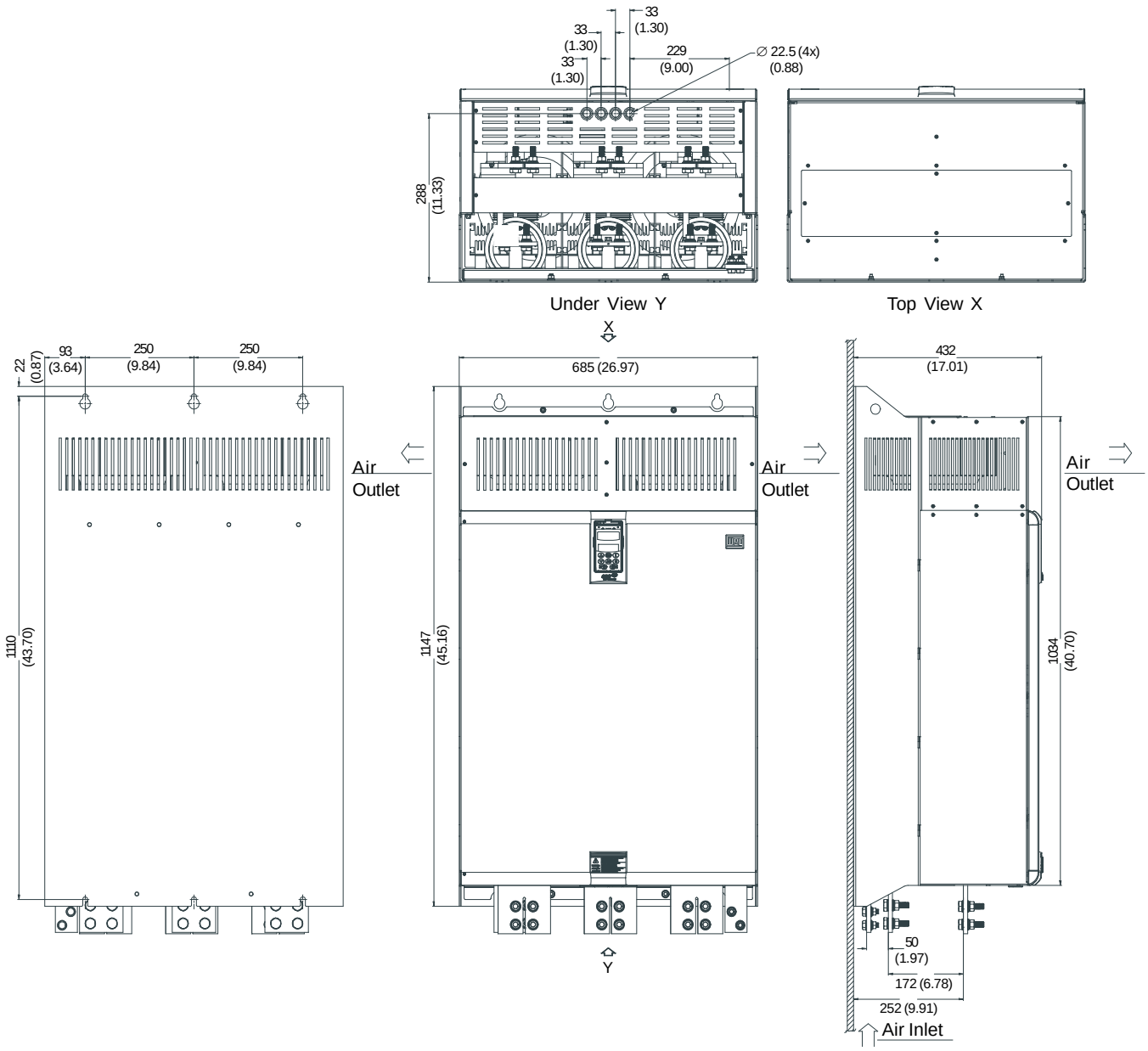

Figura 10.7 - *1100A and 1400A Models*