ZoneFlex R310 Access Point
Quick Setup Guide

This *Quick Setup Guide* provides step-by-step instructions on how to set up your Ruckus Wireless ZoneFlex R310 access point. After completing the steps in this guide, you will be able to place the access point at your site and provide network access to wireless clients. The rest of this document refers to the ZoneFlex R310 access point as an AP.

> **Note:**
> The minimum software revision for the AP is base image 100.x or later, SmartZone 3.2 or later, or ZoneFlex 10.0 or later.
> The rest of this document collectively refers to the SCG SZ, vSZ, ZD, and other controllers as Ruckus Wireless controllers.

Before You Begin

Before deploying your Ruckus Wireless device, please check the Ruckus Wireless Web site for the latest software and release documentation.

- Release Notes and User Documents are available at http://support.ruckuswireless.com/documents
- Software Upgrades are available at http://support.ruckuswireless.com/software
- Open Source information is available at http://support.ruckuswireless.com/open_source

This Guide in Other Languages

- 请从以下网站获得该指南的简体中文版 https://support.ruckuswireless.com
- Vous trouverez la version française de ce guide à l'adresse suivante https://support.ruckuswireless.com
- このガイドの日本語版は https://support.ruckuswireless.com でご覧ください
- 이 가이드의 한국어 버전은 웹 사이트 (https://support.ruckuswireless.com) 에서 확인하시기 바랍니다
- Veja a versão em português (Brasil) deste guia em https://support.ruckuswireless.com
- Puede ver la versión en español (América Latina) de esta guía en https://support.ruckuswireless.com

Figure 1. ZoneFlex R310 AP

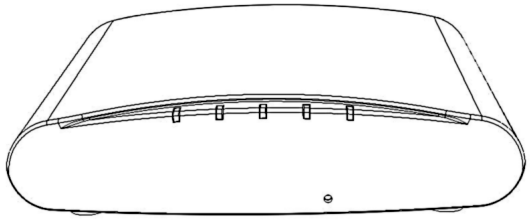

Package Contents

- One ZoneFlex R310 access point
- Two mounting screws and plastic wall anchors
- One T8 5mm M2.5 Torx locking security screw
- One unit removal pin
- Regulatory flyer
- Product warranty statement
- Declaration of conformity, if required
- *Ruckus Wireless AP Getting Started Guide*
- This *Quick Setup Guide*

Configuring the AP

- Step 1: Collecting the AP MAC Address
- Step 2: Collecting Setup Requirements, Hardware, and Tools
- Step 3: Connecting Your Computer to the AP
- Step 4: Preparing Your Computer for AP Setup
- Step 5: Logging Into the AP Web Interface
- Step 6: Customizing the Wireless Settings
- Step 7: Placing the AP at the Site
- Step 8: Verifying the Installation

Step 1: Collecting the AP MAC Address

- Write down the MAC address (12 alphanumeric digits) from the outside of the AP.

> **Important!**
> If the AP is to be managed by a Ruckus Wireless controller, then follow the controller user documents to connect the AP to your local network and configure it for initial operation. In that case, you may not need to complete the following steps.

Step 2: Collecting Setup Requirements, Hardware, and Tools

- A computer with Ethernet adapter running Windows 7 or equivalent, with Firefox or equivalent web browser.
- One Cat 5e (or better) Ethernet cable.
- T8 Torx screwdriver.
- An AC-to-12VDC power adapter (sold separately)
  --OR--
  an 802.3af-compliant Power over Ethernet (PoE) switch or PoE injector.

Step 3: Connecting Your Computer to the AP

A After removing the AP from its package, place it next to your computer.

B Using an Ethernet cable, connect your computer's network port to the **POE IN** port on the AP.

C Connect the AC power adapter (sold separately) to the **12VDC** AP port, and plug the AC power adapter into a convenient and protected AC power source.

Alternatively, connect the **POE IN** port to a PoE injector or PoE switch for both power and network connectivity.

Figure 2. AP rear panel

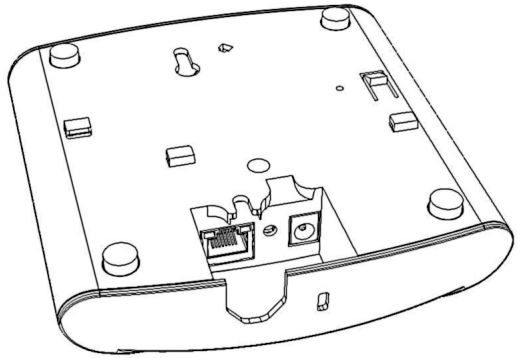

D After bootup, verify that the **PWR** LED on the AP is a steady green.

Step 4: Preparing Your Computer for AP Setup

> **Note:**
> The following procedures assume that Windows 7 is the operating system. Procedures for other operating systems are similar.

A On your Windows 7 computer, configure your network adapter from the *Local Area Connection* settings as follows:

- **Start > Control Panel > Network and Sharing Center > Change Adapter Settings**

Copyright © 2015 Ruckus Wireless, Inc.
Published 24 July 2015, Part Number 800-70972-001 Rev A

B Edit the TCP/IPv4 address settings as follows:

- **Local Area Connection > Properties > Internet Protocol Version 4 (TCP/IPv4) > Properties**

  The *Internet Protocol Version 4 (TCP/IPv4) Properties* dialog box appears.

> **Important!**
> Write down all of the currently active settings so you can restore your computer to its current configuration when this procedure is completed.

C Select *Use the following IP address* (if it is not already selected) and then make the following entries:

- *IP address:* **192.168.0.22** (or any available address in the 192.168.0.x network, except 192.168.0.1, which is the default used by the ZoneFlex R310 AP)
- *Subnet mask:* **255.255.255.0**
- Leave the *DNS server* and *Default gateway* fields empty.

D Click **OK** to save your changes. Your changes are put into effect immediately.

Step 5: Logging Into the AP Web Interface

As specified in Step 4: Preparing Your Computer for AP Setup, the computer should be connected to your AP through the Ethernet port and powered on, ready for setup.

A On your computer, open a Web browser window.

B In the browser, enter **https://192.168.0.1** to connect to the AP.

C Press **<Enter>** to initiate the connection. When a security alert dialog box appears, click **OK/Yes** to proceed.

D When the *Ruckus Wireless Admin* login page appears, enter the following:

- *Username:* **super**
- *Password:* **sp-admin**

E Click **Login**.

Step 6: Customizing the Wireless Settings

A On the AP Web interface menu, click **Configuration > Wireless > 5G** or **Configuration > Wireless > 2.4G**. The *Configure > Wireless > Common* options appear.

B Verify that the following options are active:

- *Channel:* SmartSelect
- *Channel Width:* 20 MHz, 40 MHz, or 80 MHz (default).
- *Country Code:* Select the country in which the AP will be operating.

> **Note:**
> If you purchased the AP in the United States, then this value is fixed to United States at the factory and is not user configurable. If you purchased the AP outside the United States, then verify that the value is set to your country or region. Selecting the correct country code ensures that the AP uses only the radio channels allowed in your country or region.

C Click **Update Settings** if you made any changes.

D Click any of the eight **Wireless #** (Wireless LAN Number) tabs at the top of the page.

E In *Wireless Availability,* click **Enabled**.

F Delete the text in the *SSID* field, and then type a name for your network that will help your users identify the AP in their wireless network connection application.

G Click **Update Settings** to save your changes.

H If required, repeat Steps D-G for any other **Wireless #** (Wireless LAN Number) interface that you want to enable.

I Click **Logout** to exit the Web interface.

J Disconnect the AP from the computer and from the current power source, and then restore your computer to its original network configuration.

Step 7: Placing the AP at the Site

A Move the AP to its permanent location (accessible to both AC or PoE power and network connection).

B Use a Cat 5e (or better) Ethernet cable to connect your network (or PoE injector or switch) to the **POE IN** port on the AP.

--OR--

If you are not using an 802.3af-compliant PoE switch or PoE injector, then connect the AC power adapter to the AP, and then to a convenient power source.

C Verify that the **POE IN** port LED is lit.

Step 8: Verifying the Installation

A Using any wireless-enabled computer or mobile device, search for and select the wireless network you previously configured.

B If you can connect, open a browser and link to any public Web site.

Congratulations! Your wireless network is active and ready for use. If you need to configure advanced wireless settings, such as enabling security, refer to the *Ruckus Wireless Indoor AP User Guide*.

Installing the AP

The AP can be mounted on a flat surface, on a drop-ceiling T-bar, or on a pole or flat surface. Refer to the following sections:

- Mounting on a Flat Surface
- Removing the AP from Flat-Surface Mounting Screws
- Mounting the AP on a Drop-Ceiling T-Bar
- Removing the AP from a Drop-Ceiling T-Bar
- Mounting the AP on a Flat Surface or Pole Using the Optional Secure Mounting Bracket
- Removing the AP from the Optional Secure Mounting Bracket

Mounting on a Flat Surface

The factory-supplied mounting screws and plastic wall anchors allow you to attach the AP to a wall or ceiling.

A Use the Mounting Template on the last page of this guide to mark the locations for two drill holes on the mounting surface.

B Use a 4.75mm (3/16") drill bit to drill holes approximately 25mm (1") deep into the mounting surface.

C Insert the factory-supplied anchors (A in Figure 3) and mounting screws (B) into the mounting surface, leaving approximately 6 mm (1/4") of the screw heads protruding from the surface.

Figure 3. Mounting the AP on a flat surface

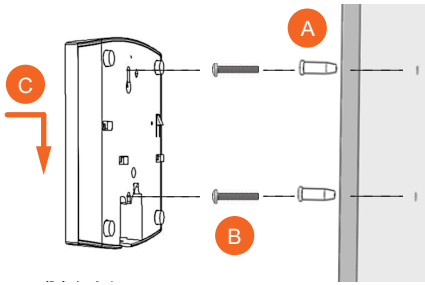

D Place the AP onto the mounting screws so that the screw heads enter the keyholes on the AP enclosure (C), and gently press down on the AP until the locking tab in the upper AP keyhole locks the AP onto the top mounting screw.

Copyright © 2015 Ruckus Wireless, Inc.
Published 24 July 2015, Part Number 800-70972-001 Rev A

Removing the AP from Flat-Surface Mounting Screws

A To remove the AP from the factory-supplied mounting screws, gently press the unit removal pin (A in Figure 4) into the access hole on the end of the AP to release the bracket locking tab in the upper keyhole.

Figure 4. Removing the AP from the screw heads

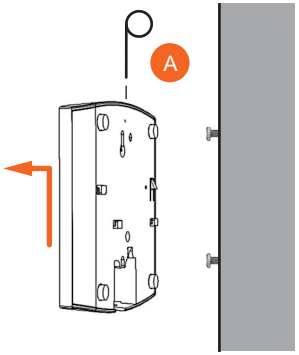

B Push the AP up and pull it away from the mounting screw heads.

Mounting the AP on a Drop-Ceiling T-Bar

A Orient the AP so that the T-bar is positioned between the T-bar clips as shown in Figure 5, then rotate the AP until the third T-bar clip catches the T-bar and the latch locks the T-bar in place (Figure 6).

Figure 5. Initial position

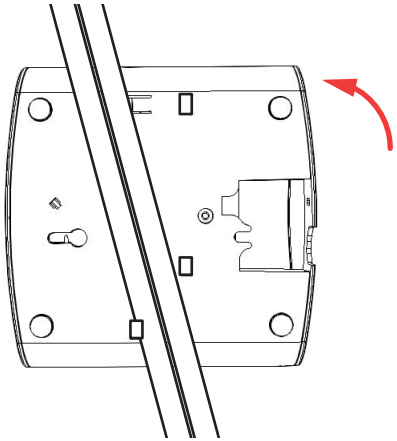

Figure 6. Final position

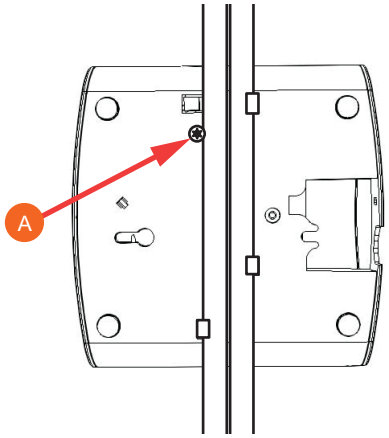

B (OPTIONAL, for added security.) Using a Torx T8 screwdriver, insert the locking screw (A) into the hole near the latch to lock the AP in place.

Removing the AP from a Drop-Ceiling T-Bar

- To remove the AP, first remove the security screw, then depress the latch while rotating the AP so that the T-bar clips disengage the T-bar.

Mounting the AP on a Flat Surface or Pole Using the Optional Secure Mounting Bracket

The customer-ordered Ruckus Wireless secure mounting bracket kit (ordering part number 902-0120-0000) includes a metal mounting bracket and provides greater security when attaching the AP to flat surfaces (walls and ceilings) and to poles.

- If you are mounting the AP on a flat surface, then you will also need an electric drill with a 4.75mm (3/16") drill bit, and the four No. 6 zinc plated screws and plastic wall anchors included with the kit.
- If you are mounting the AP on a truss or pole, then you will also need the two customer-supplied stainless steel pipe clamps.

Continue with the following:

A If you are mounting the AP on a flat surface, then use the secure mounting bracket as a template to mark the locations for four drill holes on the mounting surface. There are four screw holes available on the secure mounting bracket.

Fasten the bracket to the flat surface using four mounting screws and plastic wall anchors and continue with Step C.

B If you are mounting the AP on a pipe or pole, then feed the two customer-supplied stainless steel clamps through the slots on the secure mounting bracket. Use common hand tools to tighten the clamps around the pipe or pole.

After the bracket is attached, continue with Step C.

Figure 7. Attaching the AP to the secure mounting bracket

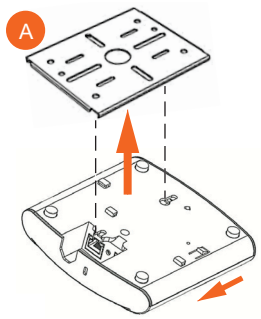

C Insert the two studs on the secure mounting bracket (A) into the keyholes on the bottom of the AP.

D Slide the AP toward the Ethernet port until the locking tab in the upper AP keyhole locks the AP onto the top mounting bracket stud.

Copyright © 2015 Ruckus Wireless, Inc.
Published 24 July 2015, Part Number 800-70972-001 Rev A

Removing the AP from the Optional Secure Mounting Bracket

A Gently press the unit removal pin (A in Figure 8) into the access hole on the end of the AP to release the bracket locking tab in the upper keyhole.

Figure 8. Removing the AP from the secure mounting bracket

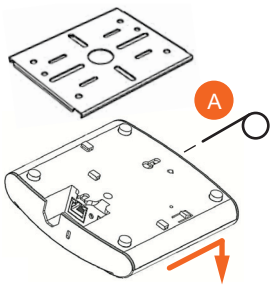

B Slide the AP toward the unit removal pin and remove the AP from the bracket.

Troubleshooting

- **CAUTION:** If required, you can reset the AP to its factory default settings by using a straightened paper clip to press and hold the reset button located between the **POE IN** and **12VDC** ports, for six or more seconds. DO NOT DO THIS UNLESS SO INSTRUCTED. (Doing this resets the AP IP address to 192.168.0.1.)
- **NOTE:** After a reset, you can access the internal AP web interface using **https://192.168.0.1**. Your device must use any other unused address from 192.168.0.2 through 192.168.0.254, with subnet mask 255.255.255.0. The username is **super**, and the password is **sp-admin**. Refer to the *Ruckus Wireless Indoor AP User Guide* for information on configuring and operating the AP. This document is available at https://support.ruckuswireless.com

Mounting Template:

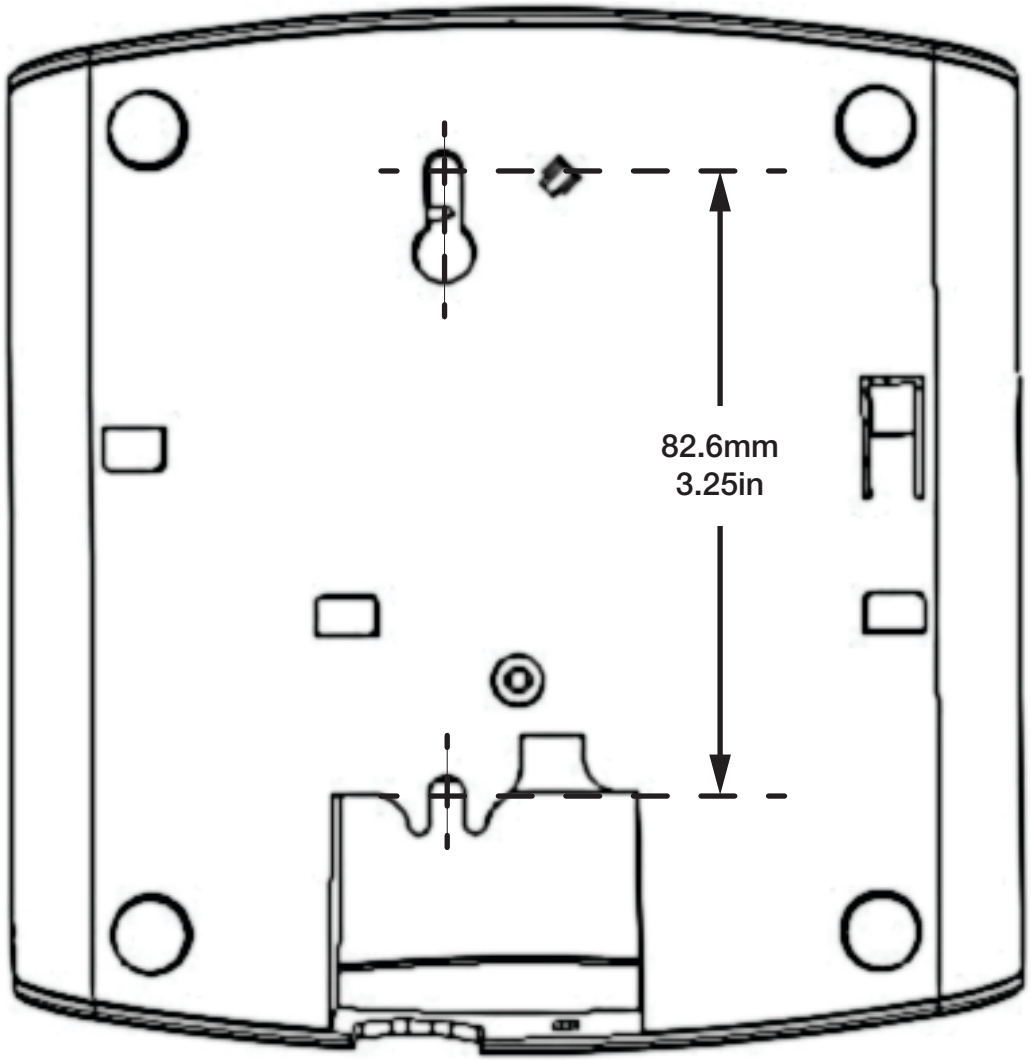

Copyright © 2015 Ruckus Wireless, Inc.
Published 24 July 2015, Part Number 800-70972-001 Rev A