GARLAND®

SERVICE MANUAL SUPPLEMENT

for Model EM-C120

Microwave Oven

SANYO

CAUTION

WARNING TO SERVICE TECHNICIANS

PRECAUTIONS TO BE OBSERVED BEFORE AND DURING SERVICING TO AVOID POSSIBLE EXPOSURE TO EXCESSIVE MICROWAVE ENERGY

(a) Do not operate or allow the oven to be operated with the door open.

(b) Make the following safety checks on all ovens to be serviced before activating the magnetron or other microwave source, and make repairs as necessary:
(1)Interlock operation, (2) proper door closing, (3) seal and sealing surfaces (arcing, wear, and other damage), (4) damage to or loosening of hinges and latches, (5) evidence of dropping or abuse.

(c) Before turning on microwave power for any service test or inspection within the microwave generating compartments, check the magnetron, wave guide or transmission line, and cavity for proper alignment, integrity, and connections.

(d) Any defective or misadjusted components in the interlock, monitor, door seal, and microwave generation and transmission systems shall be repaired, replaced, or adjusted by procedures described in this manual before the oven is released to the owner.

(e)(i) A microwave leakage check to verify compliance with the Federal performance standard should be performed on each oven prior to release to the owner. (For U.S.A)

(e)(ii) A microwave leakage check to verify compliance with the Canadian Regulation, HEALTH AND WELFARE, SOR/79-920 should be performed on each oven prior to release to the owner. (For CANADA)

FORM # EM-C120 (02/05)

CAUTION

For microwave energy emission

On every service call. A check for microwave energy emission must be made according to the following manner.

Measurement of energy emission

Measurement must be made with the microwave oven operating at its maximum output and containing a load of 275±15 milliliters of tap water initially at 20°±5° celsius (68±9°F) placed within the cavity at the center.

NOTE: The water container must be a 600 milliliter beaker and made of an electrically none conductive material such as glass or plastic.

The cook tray must be in place when measuring emission.

A properly operating door and seal assembly will normally register emission no greater than 4 mW/cm^2 to allow for measurement uncertainty with the cooking shelf or tray in place.

All repairs must be performed in such a manner that microwave energy emission is minimal.

Follow the instructions supplied with the detector being used and perform an R.F. emission test around the door front, and all edges and vent of the outer case. The cabinet (wrapper) must be in place and the oven fully assembled.

When performing an emission survey, with the meter on FAST RESPONCE, the movemtnt of detector probe shall not exceed one (1) inch per second.

In the area emitting the highest reading, switch the meter to SLOW RESPONSE and take a reading for minimum of three (3) seconds. We recommended the pattern outline shown below when the door surface is surveyed.

NOTE: Periodically check to be sure that the probe tip is not worn or dirty.

The following U.S. standard applies to microwave ovens:

21 CFR 1030.10, Performance Standard for Microwave Ovens.

It requires that the power density of the microwave radiation emitted by a microwave oven shall not exceed five (5) milliwatts per square centimeter at any point 5 centimeters (about 2 inches) or more from the external surface of the oven.

All microwave ovens exceeding the emission level of 4 mW/cm^2 must be reported to Dept. of Service for microwave ovens and the manufacturer immediately .

The owner should be told not to use the microwave oven until it has been repaired completely.

If a microwave oven is found to operate with the door open, report to Dept. of Service, the manufacturer and CDRH* immediately. Also tell the owner not to use the oven.

*CDRH: Center for Device and Radiological Health.

The interlock monitor switch acts as the final safety switch protecting the customer from microwave radiation. If the interlock monitor switch operates properly and the door interlocs switch fails, the fuse will blow. If this happens, all interlock switches must be replaced. The contacts of the interlock switches may be welded together.

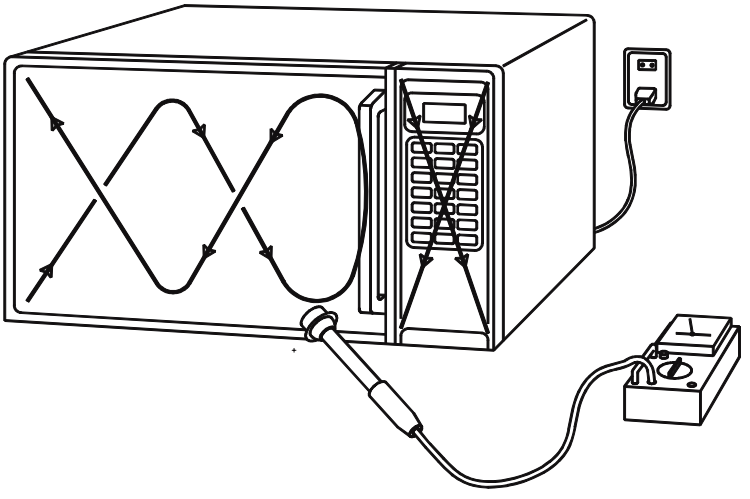

1. SPECIFICATIONS

Microwave output ..... 1,200W to 120W
Frequency 2,450MHz
Power supply 120V, 60Hz
Rated current ..... 15 Amp.
Safety Device .....
Thermal protector(Magnetron) 150°C(270°F) Open
(Thermostat) 80°C(144°F)Close
Thermistor (Magnetron) 200°C(360°F) Open
108°C(194°F)Close
Thermistor(Duct).....120°C(216°F) Open
Fuse (Cartridge Type) 250V 10A
Micro switch, Relay
Interlock Switch
Interlock monitor Switch
Door sensing Switch and
Relay RL-3 and RL-4
Max. input time ..... Electronic Digital, up to
Manual 10min./Memory 30min.
Overall Dimensions ..... 422(W)x540(D)x335(H) mm
Oven cavity size ..... 330(W)x330(D)x230(H) mm
Effective Capacity of Oven Cavity.....19.1liters
Net weight 29Kg

2. POWER OUTPUT MEASUREMENT

NOTE: The power output specification, 1200W on this model is measured with IEC measurement. The power output is measured with two(2) liters water is equivalent to 1200W in measurement with IEC, when measured with the following power output.

(1)1. Fill two beakers, one liter of tap water respectively
2. Use an accurate thermometer and measure each water temperature respectively.

(2) Place beakers side by side in center of the ceramic tray.

(3) Close the door,set the “TIME” for two minutes. Touch the “START” key and heat the water for exactly two minutes.

(4)Take the beakers out, immediately stir the water and measure the water temperatures respectively.

(5) Calculate the temperatures rise of water in each beaker. Then calculate the average value of the two temperature rises.(ƒ¢t)

(6) The teperature rise shall be in the following range;

	Average Temp. Rise
Minimum	15.4°C
Maximum	18.8°C

Power output is affected by the line voltage under load.

(7) For correct Power output measurement, the line voltage under load must be 120±2 Volts.

3.CIRCUIT DIAGRAM

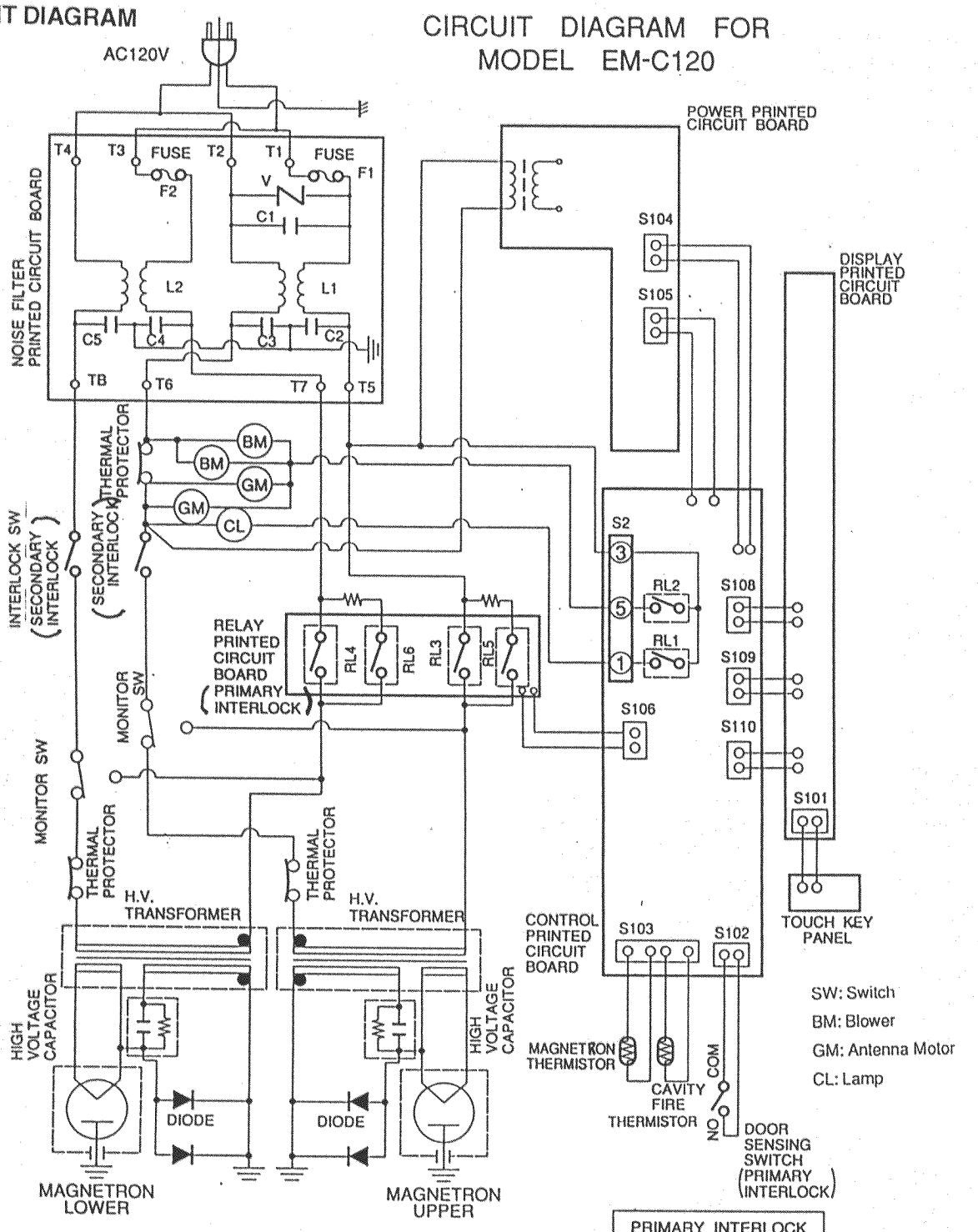

SWITCH MADE ●	INTERLOCK SWITCH	INTERLOCK MONITOR SWITCH		PRIMARY INTERLOCK DOOR SENSING SWITCH	PRIMARY INTERLOCK RELAY 3 RELAY 4
CONDITION	COM	COM	COM	COM	COM
	NO	NC	NO	NO	NO
DOOR OPEN		●			
DOOR CLOSED	●		●	●	●

Figure 1

∗ Caution: The voltage between filament leads of magnetron is about 3.3VA.C, but the filament carries 4KV/DC high voltage with respect to ground.Never touch these leads with bare hand during operation.

4. TEST PROCEDURES AND TROUBLESHOOTING

CAUTION

-DISCONNECT THE POWER SUPPLY CORD FROM THE WALL OUTLET WHENEVER REMOVING THE CABINET FROM THE UNIT. PROCEED WITH TESTS ONLY AFTER DISCHARGING THE HIGH VOLTAGE CAPACITORS AND REMOVING THE LEAD WIRES ON THE PRIMARY WINDING OF THE HIGH VOLTAGE TRANSFORMERS FOR LOWER AND UPPER MAGNETRONS.

(SEE FIGURE 3)

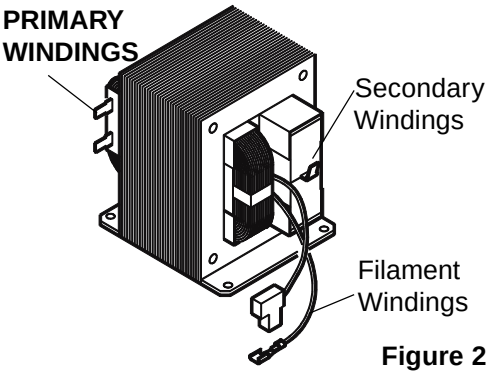

Figure 2

A. TEST PROCEDURES

COMPONENT	CHECKOUT PROCEDURE	RESULT
HIGH-VOLTAGE TRANSFORMER	1) Measure the resistance: With an ohm-meter on R x1 scale. a. Primary winding; b. Filament winding; c. Secondary winding; 2) Measure the resistance: with an ohm-meter on highest scale. a. Primary winding to ground; b. Filament winding to ground; 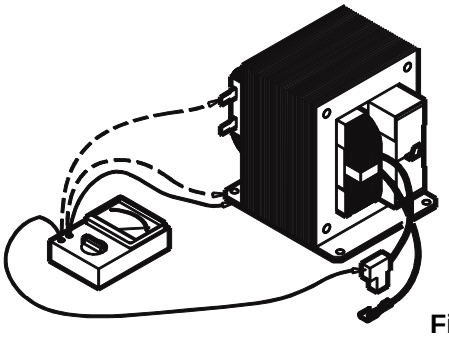 **Figure 3**	Normal reading: Approximately 1.0 ohms Less than 1 ohm. Approximately 83 ohms Normal reading: Infinite ohms. Infinite ohms. Note: Remove varnish of measured point.

5. DISASSEMBY INSTRUCTIONS

F. CHANGING POWER SUPPLY CORD

(See exploded view on page 5)

(1) Unfasten 1 screw for ground and pull out the 2 wires of the power cord from the terminal plate.

(2) Remove 1 screw for the bottom bracket of the cord bushing.

(3) Install the new power supply cord with the reverse procedure of above (1) to (2).

WARNING:

For changing the power supply cord, never use other than the following.

Key No.	Order No.	Parts Name
5	617 140 1561	Power cord Ass'y
6	617 140 1332	Cord bush
7	617 140 1349	Bottom bracket

Maintenance:

The microwave ovens are designed, manufactured, and tested for years of dependable operation. However, the oven may require service from time to time if the consumable components listed below are not replaced at the appropriate time. For protection from unexpected service calls and undue inconvenience, we recommend that the user has the listed parts replaced at the intervals below, (at customer cost).
This will avoid the trouble of repeated service calls after the expiration of the warranty period.

Consumable components:
When more than 1,250 hours of accumulative cooking time or more than 200,000 cycles of door opening/closing is observed by key operations, the following consumable components will be replaced.
(Maintenance light in window display indicates when accumulative cooking time reaches 1,250 hours.)

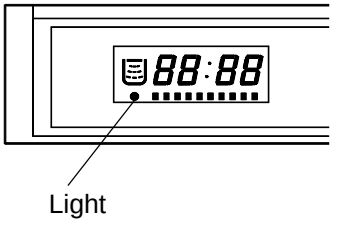

1. Magnetron Tube, Part No. 415 002 7702

2. Printed Circuit Board-Relay, Part No. 617 137 3844

3. Switch base Assembly, Part No. 617 205 1208

4. Door Latch, part No. 617 068 1087

When more than 2,000 hours of accumulative cooking time is observed, the following consumable components should be replaced.

5. Blower motor, Part No. 617 140 1585
   When slow rotating of blower motor is observed after removing dust from blower motor, blower motor must be replaced.

6. Door hinge, Part No. 617 120 3028
   When a worn door hinge is observed and proper door adjustments can not be made, the door hinge must be replaced.

7. Door Assembly, Part No. 617 178 0734
   When a worn door pin is observed and proper door adjustments can not be made, the door assembly must be replaced.

6. EXPLODED VIEW AND PARTS LIST

Main body Parts-1

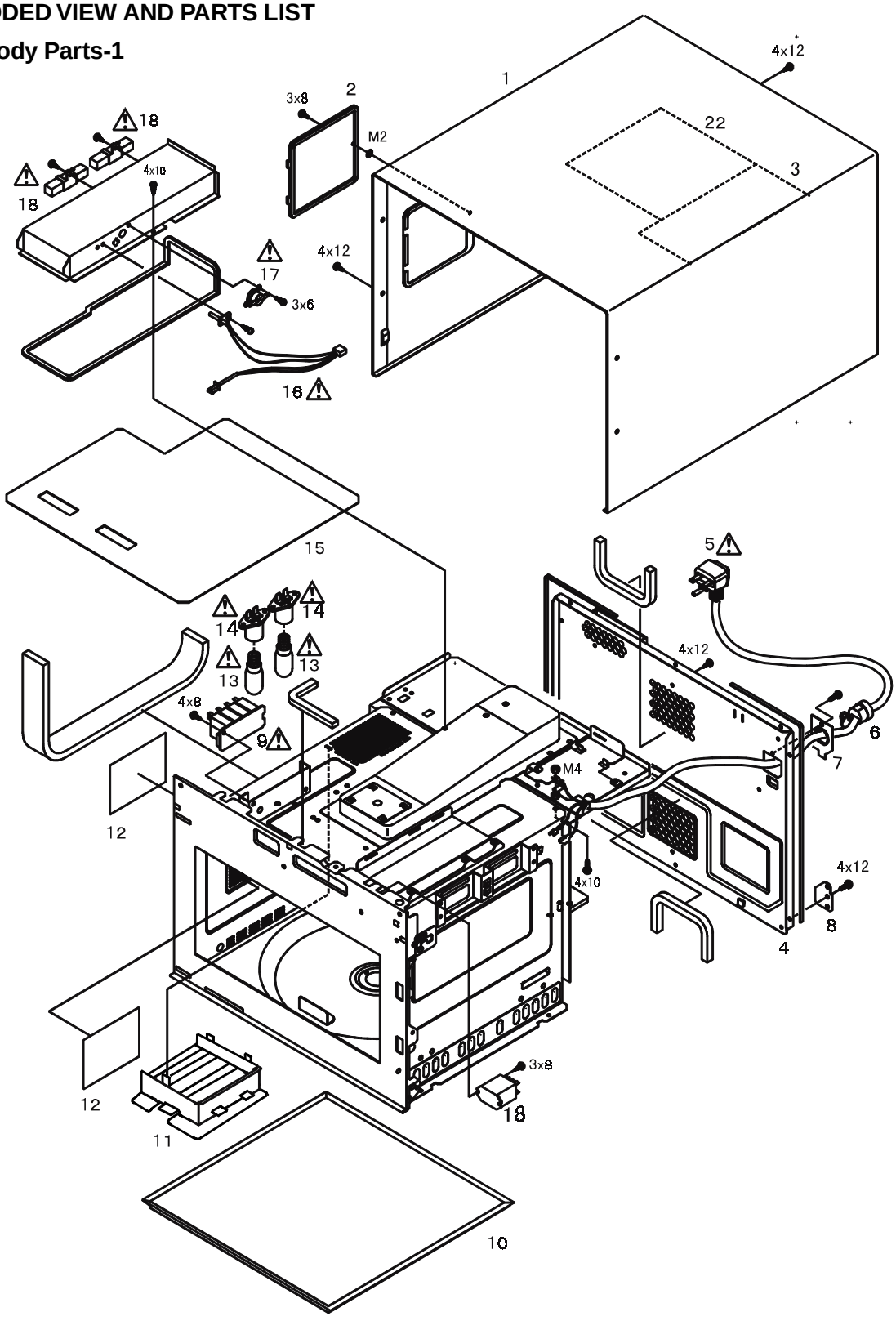

NOTE: All component have special characteristics for safety and must be replaced using parts listed in this manual.
All service on M/W ovens should be performed by a qualified technician using approved testing equipment. Customers should not attempt replace component marked with a ⚠ symbol.

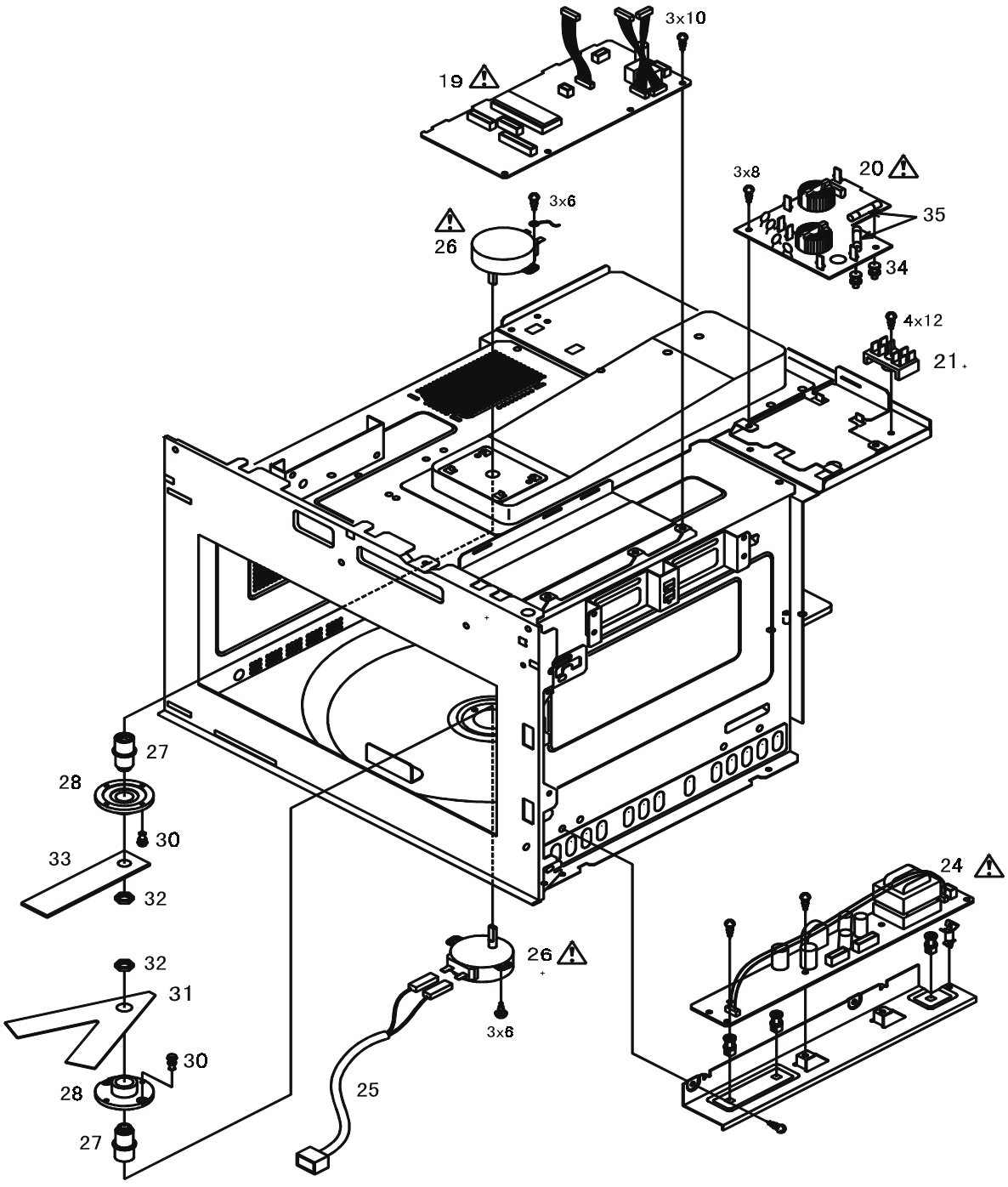

NOTE: All component have special characteristics for safety and must be replaced using parts listed in this manual.
All service on M/W ovens should be performed by a qualified technician using approved testing equipment. Customers should not attempt replace component marked with a ⚠ symbol.

Main body parts-1

KEY NO.	SERVICE PART NO.	DESCRIPTION	Q TY
1	617 120 2854	CABINET	1
2	617 055 9584	FRAME PLATE ASS'Y	1
3	617 137 3639	INSU. SHEET	1
4	617 130 3520	FRAME REAR PLATE ASS'Y	1
5	617 140 1561	CORD ASS'Y	1
6	617 140 1332	CORD BUSH	1
7	617 140 1349	BOTTOM BRACKET	1
8	617 179 6087	FRAME BRACKET	1
9	617 137 3844	P.C.B COMP. RELAY	1
10	617 120 4230	SHELF ASS'Y	1
11	617 223 3963	DUCT	1
12	617 120 3387	LIGHT OPENING COVER	2
13	617 005 5147	LAMP 120V 20W	2
14	617 120 3592	LAMP SOCKET	2
15	617 120 3370	PROTECT COVER	1
16	617 130 3599	THERMISTOR ASS'Y	1
17	617 140 1264	THERMAL PROTECTOR 140°C	1
18	402 061 1505	CERAMIC RES 25 OHM 20W	2
19	617 208 6477	P.C.B COMP. CONTROL	1
20	617 209 9446	P.C.B COMP. NOIZE FILER	1
21	617 192 2110	TERMINAL PLATE	1
24	617 208 6484	P.C.B COMP. POWER	1
26	617 209 9422	GEAR MOTOR	2
27	617 120 3325	ANTENNA SHAFT	2
28	617 212 8535	ANTENNA BEARING	2
30	617 121 9265	CLIP	4
31	617 149 3054	ANTENNA LOWER	1
32	617 120 3349	SPECIAL NUT	2
33	617 120 3332	ANTENNA UPPER	1
34	617 207 6836	CLIP	2
35	423 020 2708	FUSE 250V 10A	2

Main body Parts-2

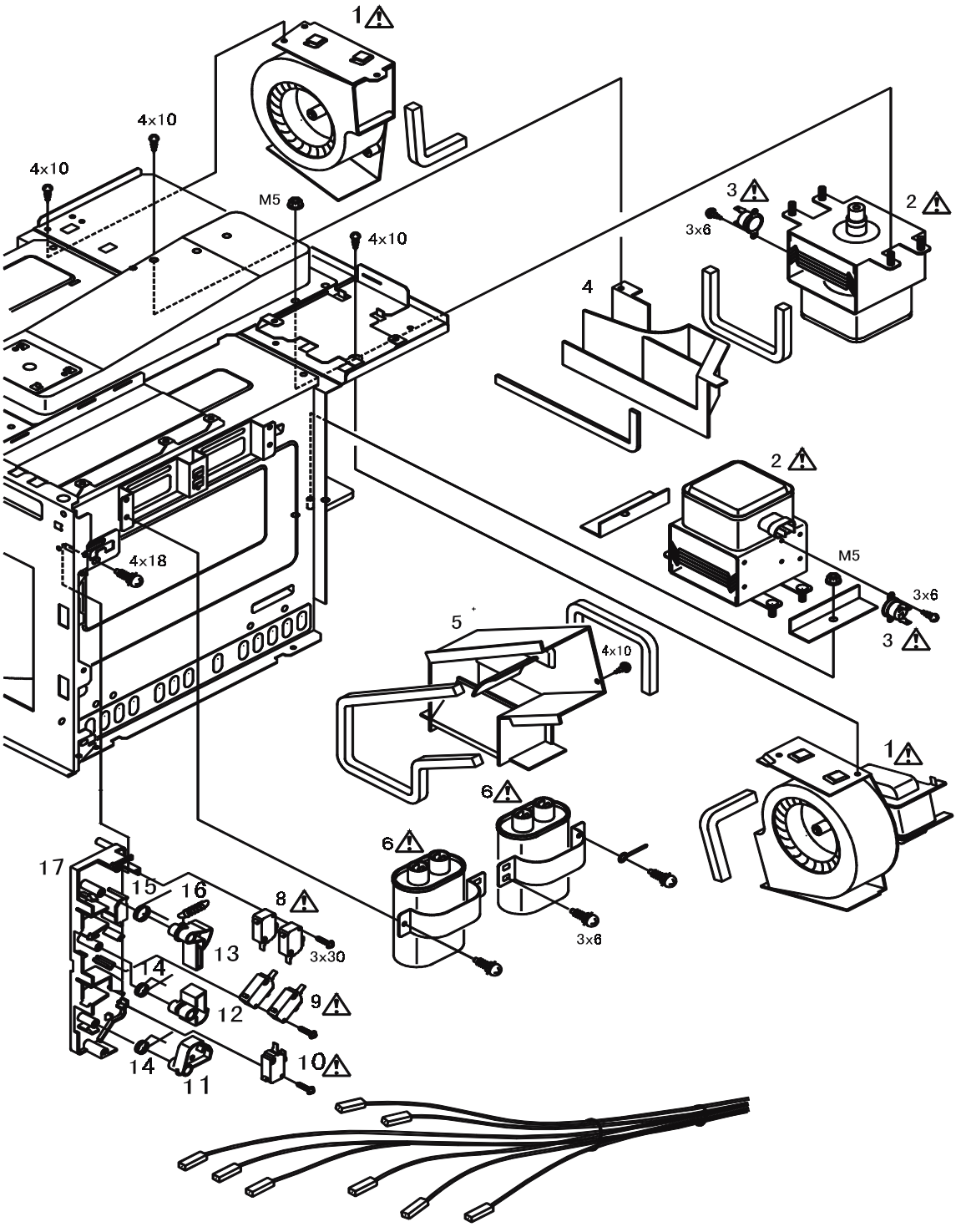

NOTE: All component have special characteristics for safety and must be replaced using parts listed in this manual.
All service on M/W ovens should be performed by a qualified technician using approved testing equipment. Customers should not attempt replace component marked with a ⚠ symbol.

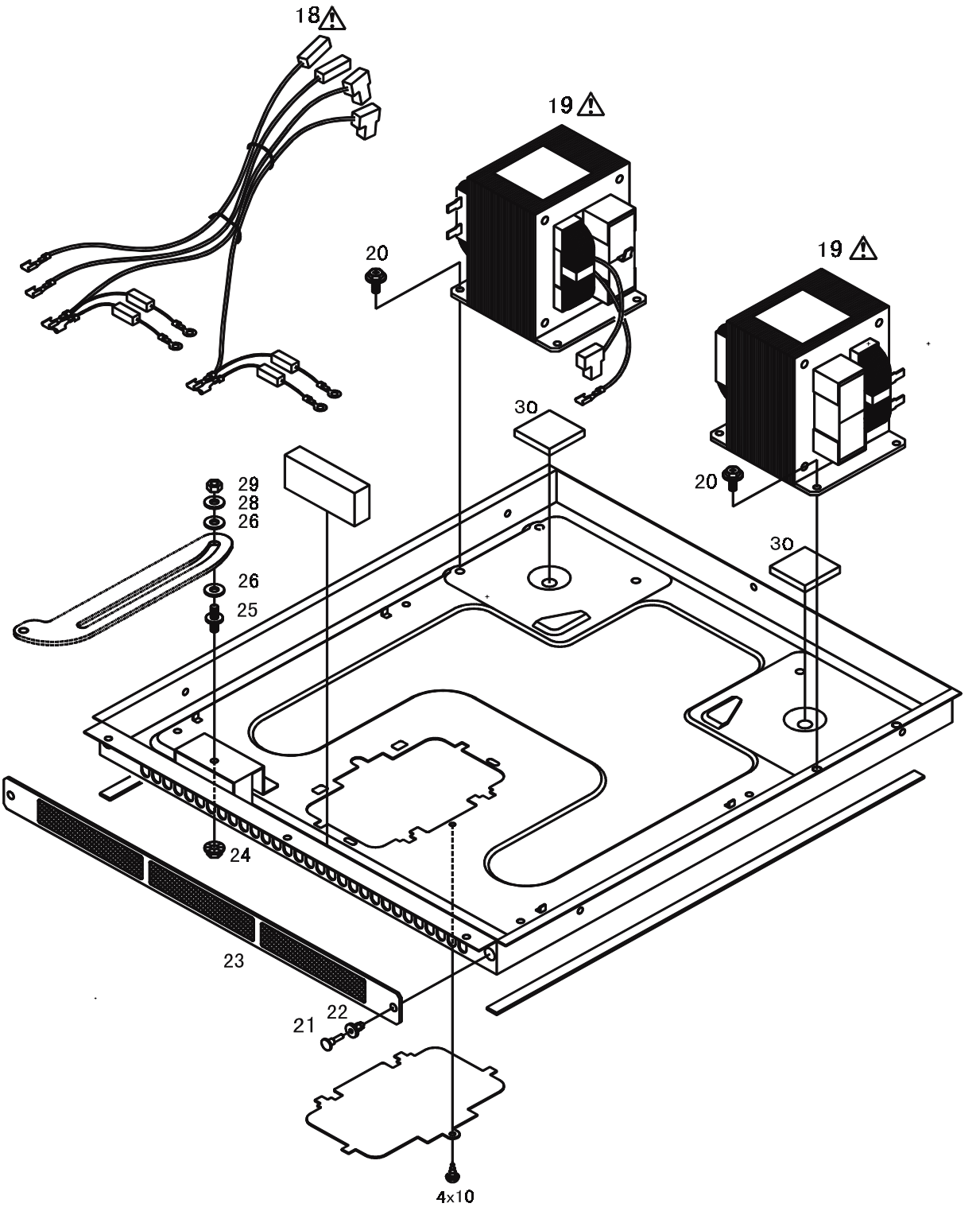

NOTE: All component have special characteristics for safety and must be replaced using parts listed in this manual.
All service on M/W ovens should be performed by a qualified technician using approved testing equipment. Customers should not attempt replace component marked with a ⚠ symbol.

Main body parts-2

KEY NO.	SERVICE PART NO.	DESCRIPTION	Q TY
1	617 140 1585	BLOWER COMP.	2
2	415 002 7702	MAGNETRON 2M-232K(M)	1
3	617 140 1257	THERMAL PROTECTOR 150°C	2
4	617 120 3431	DUCT MAG. UPPER	1
5	617 120 3448	DUCT MAG. LOWER	1
6	617 184 8441	H.V CAPACITOR 0.6MFD 2.4K	1
8	617 118 9247	MICRO SWITCH MONITOR	2
9	617 160 0438	MICRO SWITCH DOOR LATCH	2
10	617 004 3724	MICRO SWITCH DOOR SENSING	1
11	617 178 1182	LATCH LEVER	1
12	617 178 1175	LATCH LEVER	1
13	617 178 1168	LATCH LEVER	1
14	617 178 1205	SPRING	2
15	617 178 1212	SPRING	1
16	617 187 2217	SPRING	1
17	617 178 1151	LEVER STOPPER	1
18	617 209 9453	HARNESS WITH H.V DIODE	1
19	617 205 1260	H.V TRANSFORMER	2
20	617 080 4196	SPECIAL SCREW	6
21	617 122 8908	CLIP	2
22	617 122 6379	GROMMET	2
23	617 120 3394	AIR FILTER ASS'Y	1
24	411 004 3506	NUT HEX+FLG W/SRT 5	1
25	617 080 3830	SPECIAL SCREW	1
26	617 080 5179	SPECIAL WASHER	2
28	617 080 5186	SPECIAL WASHER	1
29	411 055 0202	NUT HEX 5	1
30	617 078 3422	PROTECT PACKING	2

Note:SWITCH BASE ASSEMBLY (Part No. 617 205 1208) consists of parts listed on the above Key #8 thru #17.

Door Parts

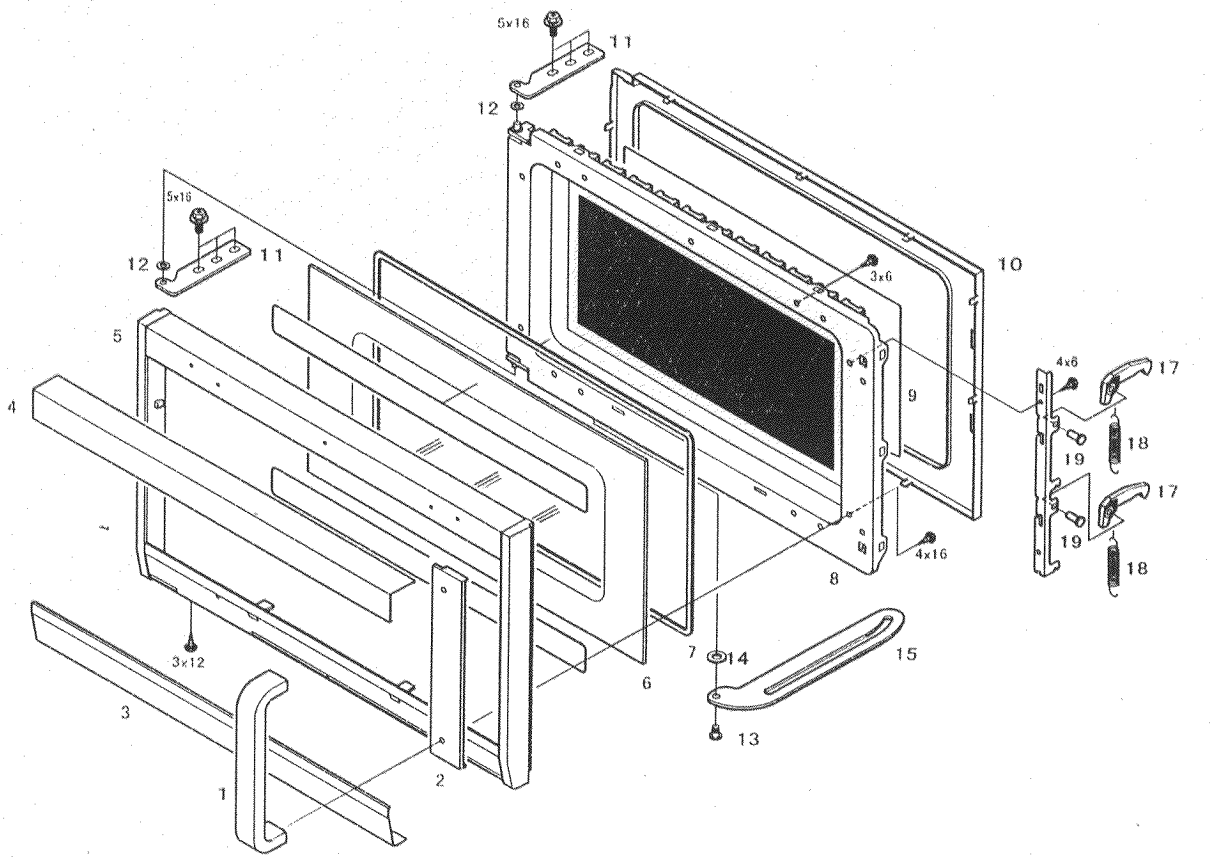

KEY NO.	SERVICE PART NO.	DESCRIPTION	Q·TY.
1	617 201 9697	DOOR HANDLE	1
2	617 201 9680	DOOR BASE	1
3	617 120 3127	ORNAMENT PLATE LOWER	1
4	617 120 3110	ORNAMENT PLATE UPPER	1
5	617 120 3073	DOOR COVER	1
6	617 209 9385	DOOR PANEL	1
7	617 121 5489	PACKING	2
8	617 178 0734	DOOR ASS'Y	1
9	617 178 1441	DOOR PANEL	1
10	617 178 0840	CHOKE DIELECTRIC	1
11	617 120 3028	HINGE	2
12	411 089 2500	WASHER F 5X10X0.8	2
13	617 080 3847	SPECIAL SCREW	1
15	617 068 3623	DOOR ARM	1
17	617 068 1087	DOOR LATCH	2
18	617 140 5392	SPRING	2
19	617 068 3579	ARM PIN	2

Note:DOOR ASSEMBLY (Part No. 617 178 0734) consists of parts listed on the above Key # 1 thru # 19.

Control panel Parts

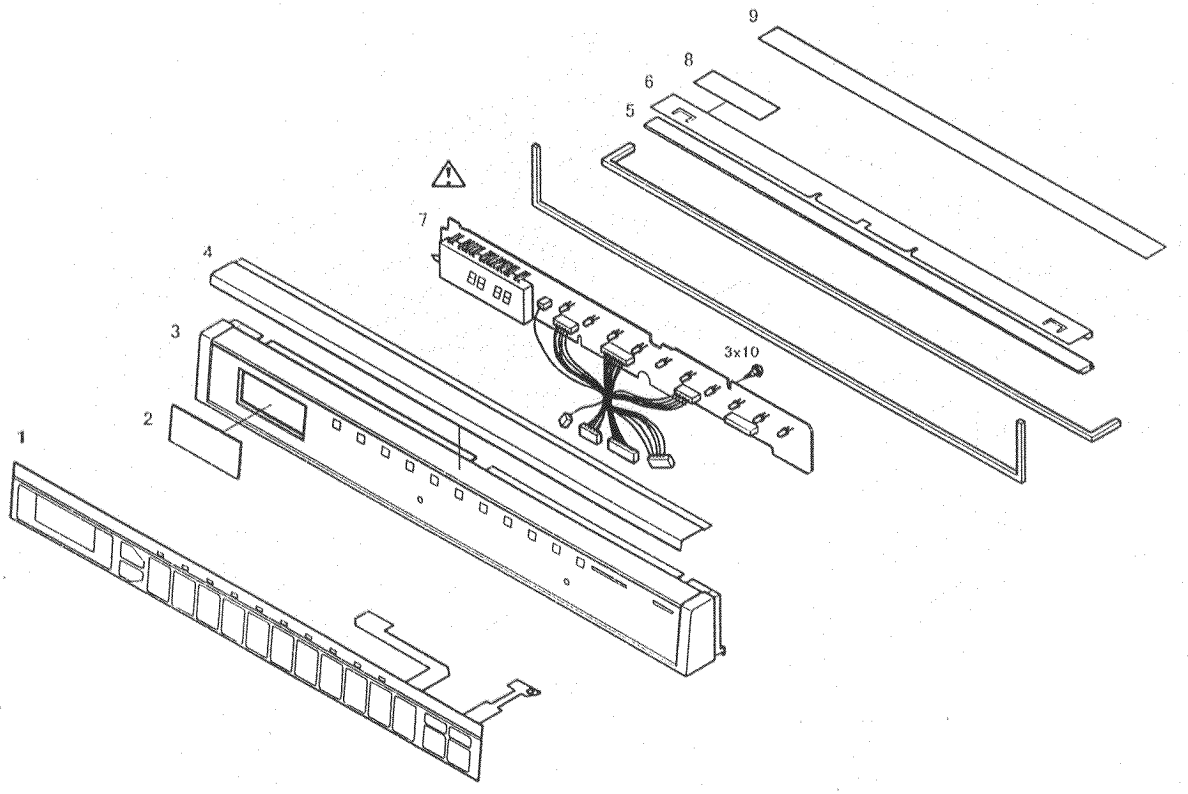

NOTE: All component have special characteristics for safety and must be replaced using parts listed in this manual. All service on M/W ovens should be performed by a qualified technician using approved testing equipment. Customers should not attempt replace component marked with a ⚠ symbol.

KEY NO.	SERVICE PART NO.	DESCRIPTION	Q TY.
1	617 205 1161	KEY BOARD	1
2	617 120 3516	CONTROL PLATE	1
3	617 120 3493	CONTROL BASE	1
4	617 201 9895	ORNAMENT PLATE	1
5	617 073 7616	CAVITY GASKET	1
6	617 073 9672	PACKING COVER	1
7	617 211 7904	P.C.B COMP. DISPLAY	1
8	617 125 9872	INSU. SHEET	1
9	617 208 3377	CONTROL COVER	1

Items not illustrated

KEY NO.	SERVICE PART NO.	DESCRIPTION	Q TY.
	617 130 3797	MENU LABEL	1
	617 205 1376	OPERATING INSTRUCTIONS	1

CONTROL CIRCUIT BOARD

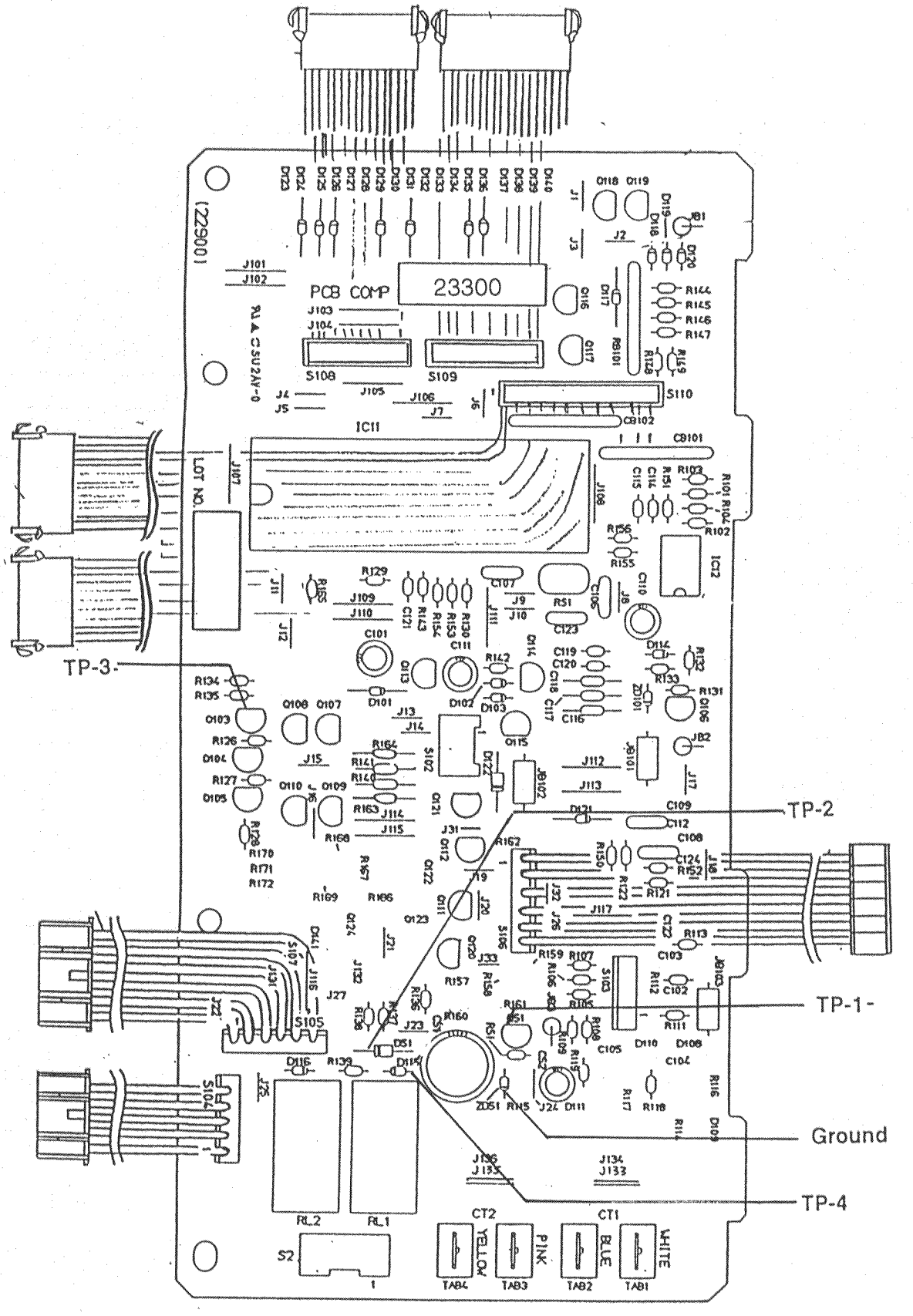

8. OVERALL CIRCUIT DIAGRAM

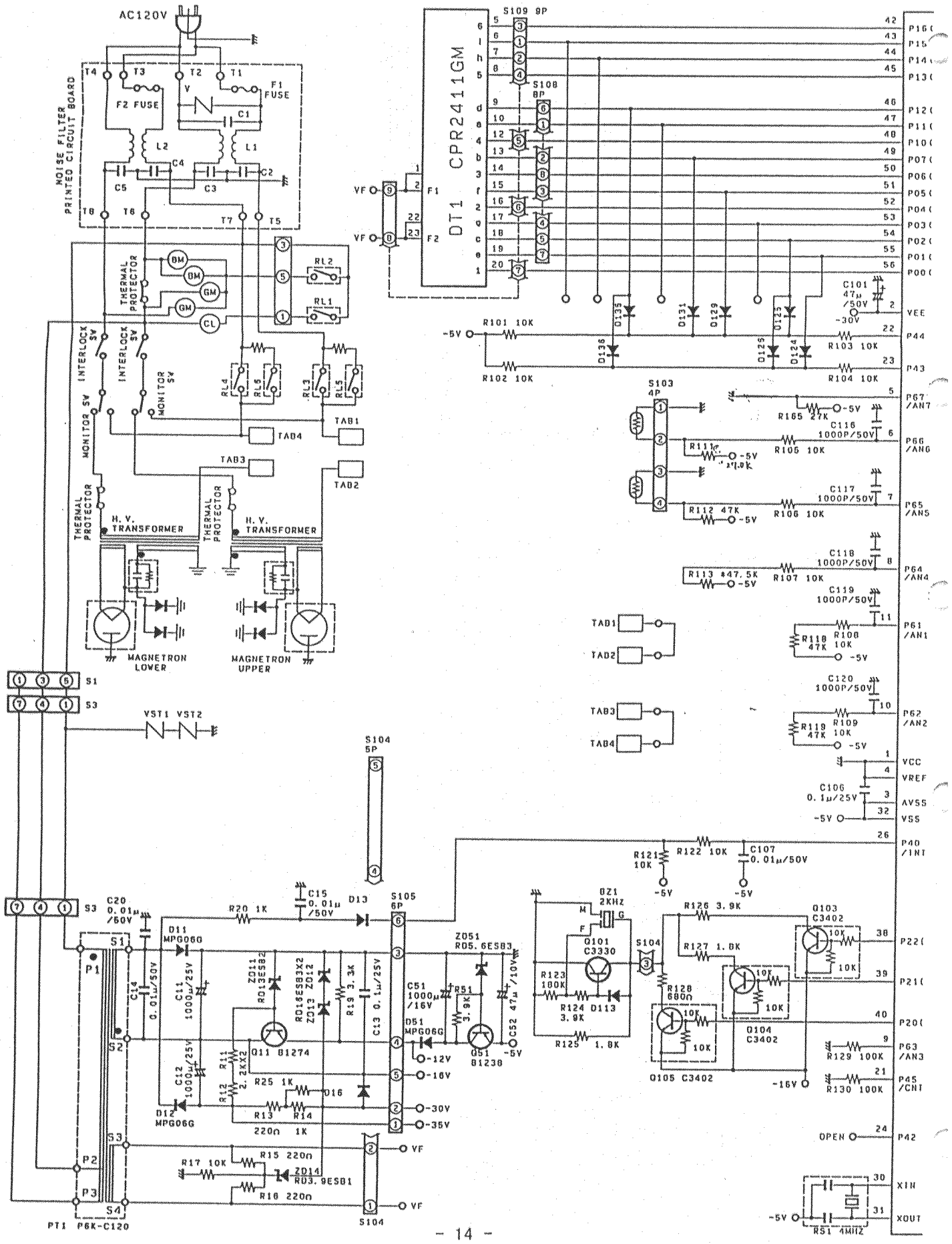

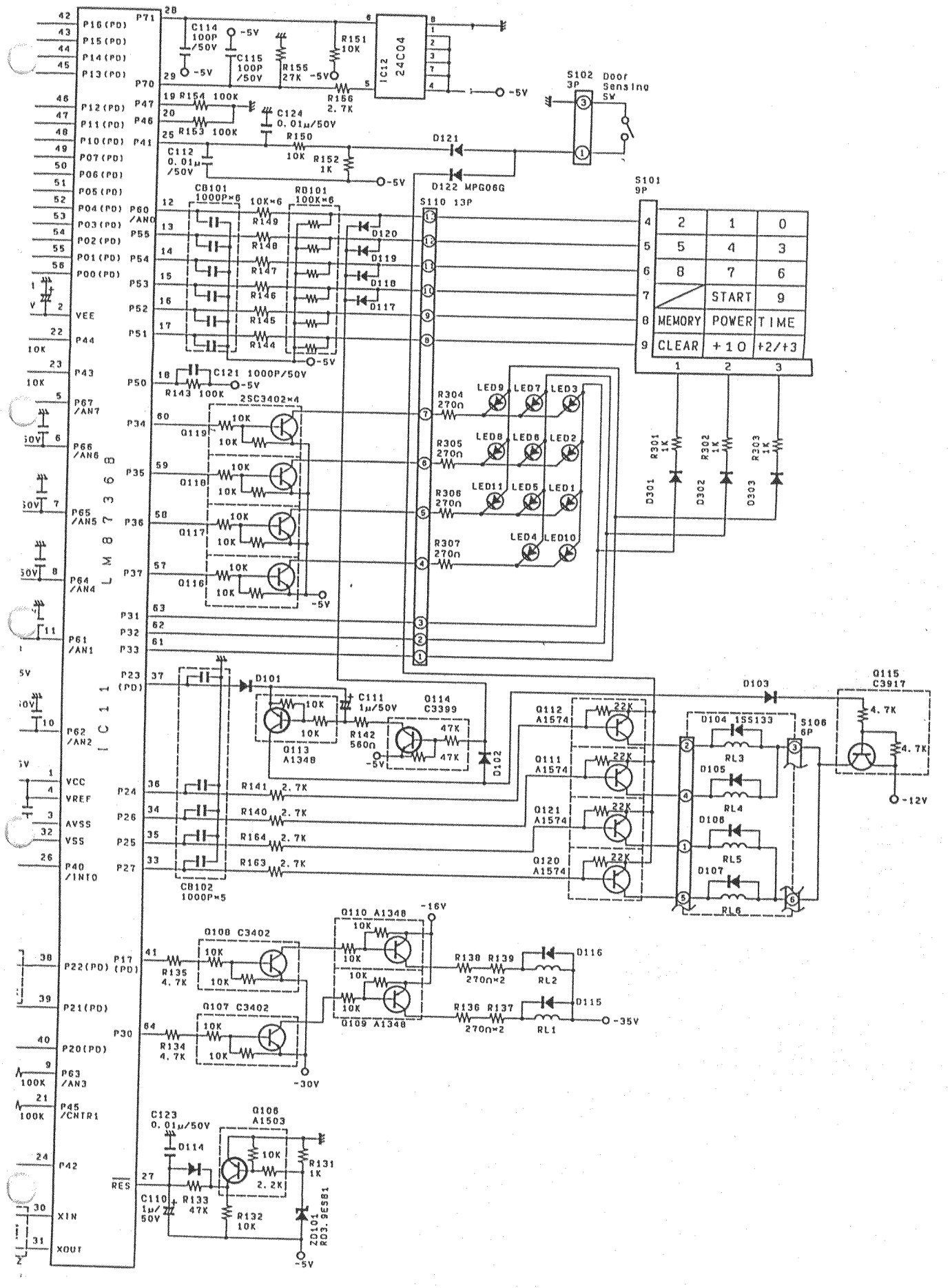
IC11 LM8736
P16(PD)
P15(PD)
P14(PD)
P13(PD)
P12(PD)
P11(PD)
P10(PD)
P07(PD)
P06(PD)
P05(PD)
P04(PD)
P03(PD)
P02(PD)
P01(PD)
P00(PD)
VEE
P44
P43
P67 /AN7
P66 /AN6
P65 /AN5
P64 /AN4
P61 /AN1
P62 /AN2
VCC
VREF
AVSS
VSS
P40 /INT0
P22(PD)
P21(PD)
P20(PD)
P63 /AN3
P45 /CNTR1
P42
XIN
XOUT
RES
P71
P70
P47
P46
P41
P60 /AN0
P55
P54
P53
P52
P51
P50
P34
P35
P36
P37
P31
P32
P33
P23 (PD)
P24
P26
P25
P27
P17 (PD)
P30
C114 100P /50V
C115 100P /50V
R156 27K
R151 10K
R156 2.7K
IC12 24C04
S102 3P
Door Sensing SW
R154 100K
R153 100K
C124 0.01μ/50V
R150 10K
R152 1K
C112 0.01μ /50V
D121
D122 MPG06G
CB101 1000P×6
RD101 100K×6
10K×6
R149
R148
R147
R146
R145
R144
D120
D119
D118
D117
S110 13P
S101 9P
C121 1000P/50V
R143 100K
2SC3402×4
Q119
Q118
Q117
Q116
R304 270Ω
R305 270Ω
R306 270Ω
R307 270Ω
LED9
LED7
LED3
LED8
LED6
LED2
LED11
LED5
LED1
LED4
LED10
R301 1K
R302 1K
R303 1K
D301
D302
D303
D101
C111 1μ/50V
Q114 C3399
Q113 A1348
R142 560Ω
47K
D102
Q112 A1574
Q111 A1574
Q121 A1574
Q120 A1574
22K
D103
Q115 C3917
4.7K
D104 1SS133
S106 6P
RL3
D105
RL4
D106
RL5
D107
RL6
-12V
R141 2.7K
R140 2.7K
R164 2.7K
R163 2.7K
CB102 1000P×5
Q110 A1348
Q109 A1348
Q108 C3402
Q107 C3402
R135 4.7K
R134 4.7K
R138 R139 270Ω×2
R136 R137 270Ω×2
D116
D115
RL2
RL1
-16V
-35V
-30V
C123 0.01μ/50V
Q106 A1503
D114
R131 1K
R133 47K
R132 10K
C110 1μ/ 50V
ZD101 RD3.9ES81
-5V
2 1 0
5 4 3
8 7 6
START 9
MEMORY POWER TIME
CLEAR +10 +2/+3

Wiring of High voltage Circuit

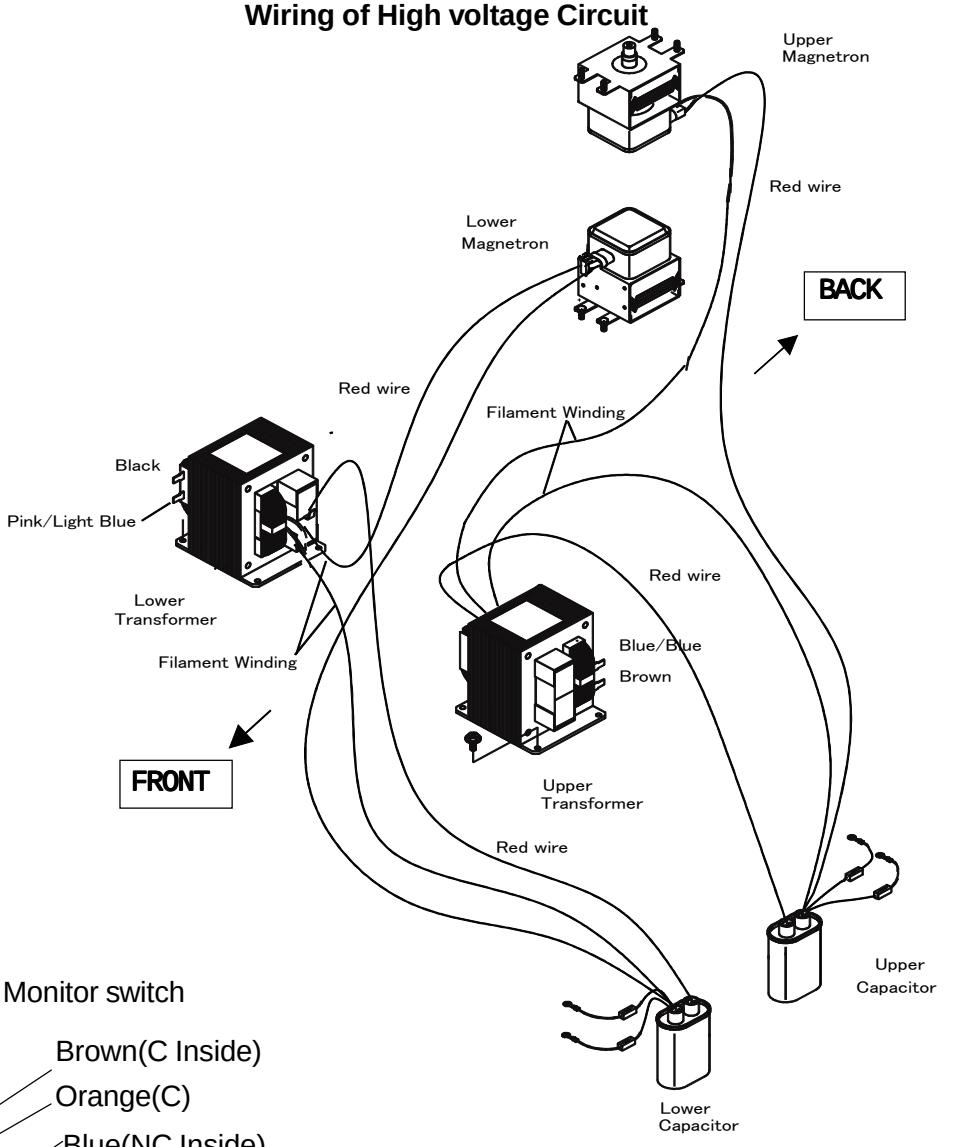

Viewed from back

Wiring of Switches

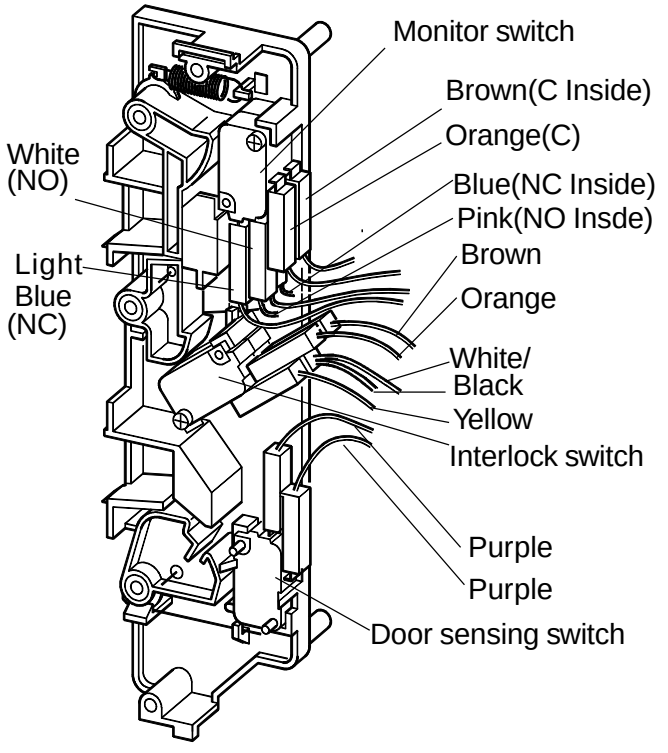

GARLAND®