GSM REMOTE SUPERVISION

GB 051 Set for cellular phone Siemens C35i, M35 or S35
Automatic Information Transfer over the GSM Network

USER GUIDE

LEVEL

Dear Customers,

We would like to congratulate you on purchasing our product – GSM Remote Supervision GB 051. This way you are getting a high-class and technically highly modern product.

GSM Remote Supervision GB 051 allows first-class and highly effective protection of cars or properties. It provides protection which cannot be easily disabled by cutting the phone line, protection which sends an ALARM message within 3 seconds and which allows also continuous control of protected area. Information about disturbance is sent in a form of phone call with warning signal or in a form of SMS message to your cell phone or by fax, even by e-mail if required.

GB 051 also allows monitoring of protected area and remote control of household appliances by cell phone or by e-mail.

Cell phone connected to GB 051 can be used simultaneously for outgoing and incoming calls without restriction of the unit's security function.

Thanks to high reliability of information transfer and low purchasing and operation costs GB 051 can be used also for transmission of technological information.

GB 051 is universal communication device which can be configured by PC or cell phone to carry out requested functions, handling during operation is easy.

Before setting Remote Supervision GB 051 into operation, please, read this command manual carefully. It will not only introduce you the correct installation and handling of this product but at the same time will help you fully utilize all its technical potentialities.

TABLE OF CONTENTS – GSM Remote Supervision GB 051

1. Product Description 4
   1.2. Contents of Delivery 5
2. Safety Commands 5
3. Installation and Setting into Operation 6
   3.1. Assembly of GSM Remote Supervision 6
   3.2. Wiring and connecting the GSM Remote Supervision unit 6
   3.3. Inserting the SIM Card and Connecting to the Cell Phone 7
   3.4. Indication by LED 9
4. Programming by SMS Messages 9
   4.1. PIN in GSM Remote Supervision 10
   4.2. RESET of GSM Remote Supervision 11
   4.3. INIT – Re-initialization of Values Set from Production 12
   4.4. ICALL – Regular Calling Free of Charge 12
   4.5. MCALL – Monthly Calling 12
   4.6. ACALL – Automatic Alarm Calling 13
   4.7. INFOSMS – Sending of Information Messages about Operation 13
   4.8. SMSINT – Interval for Dispatch of SMS Messages about Operation 14
   4.9. ALARMSMS – Alarm SMS Messages 14
   4.10. OUT – Set-up of Level of Outputs by SMS messages 15
   4.11. LIST – Detection of Set-up 16
   4.12. CALLBACK – Monitoring of Protected Area 16
5. Programming from PC 17
6. Operation during Failure of External Power Supply 17
7. List of Programming Commands – Control SMS Messages 18
8. Basic Technical Parameters 19

GUARANTEE CERTIFICATE 20

GUARANTEE CONDITIONS 21

STATEMENT OF CONSENSUS 22

1. Product Description

1.1. Description of Function

GSM Remote Supervision GB 051 consists of plastic box, which is firmly joined to the battery of cell phone. Communication cable with connector gets out of this box into cell phone, which is used by GB 051 for realization of phone connection and reception and sending of SMS messages.

On the upper side of the box there is a cut-off terminal board with terminals for power supply, for interface to PC, control inputs and 8 input/output cables to alarm switchboard, to detectors or to switching electronics.

Cable with a connector on the lower side of the box is intended for connecting a mobile phone Siemens (one of those: C35i, M35, S35). There is also a connector for data cable for connection to a PC that enables comfortable set up of required configuration data. All configuration parameters can also be set using SMS messages sent from a mobile phone or Internet.

Red light emitting diode (LED) on the left side signalizes basic operational states, e.g.: correct function, function from backup power supply, GSM connection in ready mode, action in progress, etc.

It is possible to prepare separate text of SMS message and to specify two numbers of cell phones, to which message shall be sent for each of the 8 inputs.

Prepared text of SMS message is sent to specified numbers by activation of one of the 8 inputs and phone call with warning alarm signal is carried out to a predefined number. In case it is not possible to send SMS message or call, the attempt is repeated 10 times in the intervals of 5 minutes.

Each input can be used at the same time as output and it is possible to set up requested value of inputs using SMS message sent from cell phone or Internet.

It is possible to request call with additional sound monitoring of the room by incoming SMS message.

It is still possible to use cell phone connected to GB 051 to carry out outgoing and incoming calls.

GB 051 is self-controlled – it sends information about failure of power supply, messages about reset, initialization, about configuration change but also information messages about operation in set intervals.

1.2. Contents of Delivery

		Sets			
Label	Component description	GB 051 010	GB 051 010A	GB 051 011	GB 051 011A
GB 051 010	GSM Remote Control only	●	●		
GB 051 011	GSM Remote Control with the Siemens C35i mobile phone			●	●
SA 012 602	AC/DC Adapter 220 V / 12 V DC, 600 mA, cable 1,5 m long		●		●
	Connector	●	●	●	●
13 004 027	Siemens C35i mobile phone only	○	○		
13 004 028	**External FME antenna reduction cable for the Siemens C35i mobile phone**	○	○	○	○
ED 001 001	**External 3 dB antenna with magnet, 3 meter cable**	○	○	○	○
ED 001 002	**Flat external antenna to be glued-on glass or plastic**	○	○	○	○
ED 051 011	**Converter for connection between a PC and the GB 051 k PC, configuration software included**	○	○	○	○
ED 051 050	**Connector reduction for the ED 050 001 converter**	○	○	○	○
01 002 008	**NiMH battery for the Siemens C35i mobile phone**	○	○	○	○
ED 050 300	**Double power switch 230 V / 5 A**	○	○	○	○
ED 050 400	**Motion detector**	○	○	○	○
ED 050 401	**Motion detector with remote control**	○	○	○	○
ED 060 601	**Push button connectable into a panel**	○	○	○	○

Note: (●) included in the predefined set
(○) optional accessory for the product type

2. Safety Commands

- GB 051 is conformable with technical standards for operation in our mains.
- Power source with voltage 10–16 V DC must be used for power supply. Dimension for peak current is 500mA.
- While cover is removed parts under voltage can be exposed. Device must be disconnected from all power sources including backup battery before maintenance or exchange of parts or filled boards.
- While fitting together and assembling the equipment avoid cut-off of interconnecting cables or their damage by edges.
- No fluids must enter the device. Danger of fire, destruction of device or injury by electric current impend. In case it occurs pull power source out of the plug immediately and consult specialist.
- Avoid forceful mechanic stress of device.
- Do not place device into rooms with high temperatures, strong vibrations or high humidity.
- In case you moved device from cool to warm room do not set it into operation immediately. Water condenses on device and operation under these circumstances can cause damage of device. Let device warm up to temperature of room. Wait until condensed water evaporates.

! The GB 051 unit must be stocked always with the mobile phone connector disconnected – when disconnected from external power supply, the GB 051 is supplied from the mobile phone battery and the battery can be damaged by getting completely flat.

3. Installation and Setting into Operation

3.1. Assembly of GSM Remote Supervision

GSM Remote Supervision by LEVEL is designed for operation in dry places. During assembly avoid hot places and places where device would be exposed to direct solar radiation or places close to heating elements.
Do not place GSM Remote Supervision or aerial mast close to phone exchange or other electronic devices or lines. Due to high-frequency electromagnetic field these devices could be interfered.
Due to interference it is not advisable to operate device close to other power or high-frequency devices.

Before assembly prove by cell phone if there is sufficient level of signal required by GSM network in selected place. Pay attention to delay in indicating of signal level.

When using for protection of property, arrange protection of area against break-in by detector.

3.2. Wiring and connecting the GSM Remote Supervision unit

Top view	Connector description
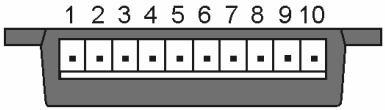	1) input/output No. 1 2) input/output No. 2 3) input/output No. 3 4) input/output No. 4 5) input/output No. 5 6) input/output No. 6 7) ground 8) input/output No. 7 9) input/output No. 8 10) power supply + 12 V
Bottom view	**Connector description**
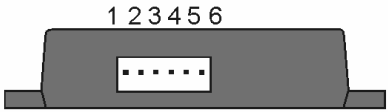	1. Init 2. Ground 3. Reset 4. TxD 5. RxD 6. +Ucc

RESET By connection clips no. 2 and 3 (ground and reset) the unit reset will be run, while all the set configuration value will remain in place. The value of days in service will be set to 0.

INIT Detailed description of how to carry on the initialization can be found in Chapter 4.1. The GSM Remote Control device will be set into default manufacturer's settings by the initialization.

Recommended linkage of outputs:	Recommended linkage of inputs:
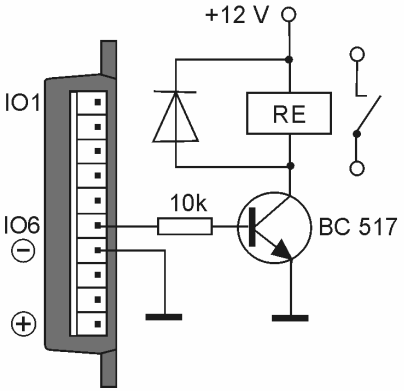	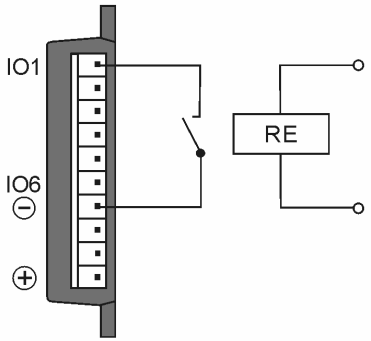

If GSM signal is insufficient external antenna can be connected to cell phone.

Professional solution of switching electrical devices on and off is provided by the 230 V/5 A double power switch ED 050 300 that can be purchased as optional accessory.

For connection with a PC use always the ED 051 011 converter with cable that connects into the connector at the bottom side of the unit and into the RS 232 interface in your PC. If you need to connect the PC using the older ED 050 001 converter, use the new optional accessory ED 051 050 (cable with reduction, Control Panel software included).

The GB 051 device is able to work fully without external power supply for approximately 12 hours being supplied from the mobile phone battery.

3.3. Inserting the SIM Card and Connecting to the Cell Phone

GSM Remote Supervision can be used only with cell phones Siemens C35, M35 and S35. Do not attempt to connect other phones, it may cause device or phone damage.

Always use only NiMH battery with the GB 051. Using a Li-Ion battery might result in unstable function of the GSM Remote Supervision; this type of battery can cause the mobile phone to turn off without the possibility of starting up automatically

Cell phone must be in basic configuration, only parameters specified further can be changed.

A SIM card inserted in the GB 051 device must be configured in one of the two ways described below:

a) If SIM is not blocked by PIN code, then the PIN value in GB 051 is irrelevant – in this case you can skip this instruction and continue to assembly the GB 051 and the cell phone.
b) If SIM is blocked by PIN, and then the PIN in GB 051 must be the same with the PIN at the SIM in mobile phone. The default PIN code in the GB 051 unit is set from production as "0000" (This will also be the PIN value after unit's initialization).

How to change PIN code in the Siemens mobile phones:
In menu select Setup – Security – Codes – Change PIN and the phone will ask you to enter first the current PIN and then to enter and verify the new PIN code – enter PIN "0000".

Description of first assembly:

1. Insert the SIM card and battery into the cell phone, put on the back cover.
2. Stick the GB 051 unit together with the back cover of the mobile phone, connectors must be faced down.
3. Interconnect the GB 051 with connector in the cell phone.
4. Connect the 12 V external power supply connector.
5. After the power supply is connected, the GB 051 will automatically turn on the phone and if the PIN code is requested by the phone, the unit will automatically enter the PIN predefined in configuration.
6. Wait to see the cell phone to connect to the GSM network, the LED should start blinking slowly.
7. Following this it is recommended to send a command SMS as described below to set a new PIN (other than 0000) in the GB 051 and the SIM card for security reasons. This will also verify the correct functionality of the GB 051 device – by confirming it can receive the command SMS and set reply message back.

After the inquiry on the phone display enter PIN with phone keyboard and wait until phone logs in. From this moment GSM Remote Supervision is able to accept control SMS messages.

Therefore send control message (command) to cell phone connected to GB 051:

XX0000PINVpppp

Where:

XX	means two capital letters X
0000	is the current PIN in GB 051 (manufacturer setting is 0000)
PIN	is the key word of the command
V	is the "space" symbol
pppp	is the new PIN value

If the PIN code on the SIM card is the same as the PIN in GB 051 and SIM is blocked by PIN, then after setting new PIN to the GB 051 unit the PIN will be changed in both – the SIM and GB 051 unit.

GB 051 replies to this SMS message and draws sender's attention to necessity of unification of PIN in Remote Supervision and phone and to necessity of switch-off of cell phone.

After reception of this SMS message verify correct PIN code change by switching the phone off with the red phone button. If PIN is set correctly and external power supply is connected GB 051 automatically switches on the phone, sets PIN and LED starts to flash in slow rhythm. It signalizes readiness of Remote Supervision for reception and sending messages. At the same time new PIN is entered into memory of GB 051.

It is possible to set up volume of cell phone ringing according to your need in main menu. Ringing of the phone can be eventually switched off completely. It is possible to change or switch off the sound indicating reception of SMS message either. Furthermore, volume of conversation can be changed (only the volume of speaker is concerned).

If SMS centre is not correctly set on SIM card it is necessary to set it up in cell phone menu.

3.4. Indication by LED

Indicating LED on the side of GB 051 indicates basic operating states:

Slow regular flashing	Remote Supervision is prepared for operation
Occasional short flash	Remote Supervision is prepared but runs from backup battery
6 quick flashes	Action in progress – after an input is activated
3 quick flashes	Incoming SMS command message
Quick flashing	Not ready for ALARM, no connection to the GSM

4. Programming by SMS Messages

Number of functions and parameters, which allow adjustment of GSM Remote Supervision to environment and user's requirements can be configured by programming. At the same time programming allows control of functions by user.

Programming can be carried out either remote by SMS message from cell phone or Internet if available - or comfortably using the Control Panel software and the ED 051 011 communication converter with cable connected to the serial port of your PC.

Send a control SMS message from cell phone or Internet, which includes in text:

XXppppINSTRUCTIONVparameter

XX	Two capital letters X
pppp	Four digits of current PIN in GSM Remote Supervision
INSTRUCTION	Key word of the command (no difference with capital or small letters)
V	**Space follows**
parameter	Set-up value* End of sequence by space or end of SMS message

One SMS can include up to 4 commands. The message then can look like this:
XXppppCOMMAND1Vparameter1VCOMMAND2Vparameter2VCOMMAND3Vparameter3V…

A confirming message is sent to the number the command message came from, this message includes information about the new set parameter value.

4.1. PIN in GSM Remote Supervision

So as GSM Remote Supervision works correctly it is necessary that PIN on SIM card corresponds with PIN of GSM gate and is different from 0000. In phone menu SIM card must be blocked, tm. control of PIN after switch-on must be activated.

If the SIM card is blocked by a PIN code, connect the GB 051 to the mobile phone only after the PIN in GB 051 was set to the same value – otherwise there is a great risk of the SIM card getting blocked.

Change of PIN

Command*	XXppppPINVnnnn
pppp	Four digits of current PIN in GSM Remote Supervision
nnnn	Four digits of new PIN

* Space must be between the key word of command “PIN” and value of parameter “nnnn“

GB 051 confirms reception of Command to sender and draws his attention to necessity of correspondence of PIN in GSM Remote Supervision and on SIM card of cell phone. At the same time advises of necessity of switching off the phone by red key. This way new PIN is entered into GSM Remote Supervision memory and connected cell phone is automatically switched on.

Information about GB 051 reset and change of PIN is sent to INFOSMS number after action is successfully carried out.

In case the PIN code is the same on the SIM card and in the GB 051 unit and the SIM is blocked by PIN, then after entering a new PIN into GB 051 the PIN code on the SIM card will be changed as well.

Value of PIN of GSM gate set from production and after initialization is 0000. PIN 0000 shall not be set into cell phone from gate so that blockage of phone is not caused during first contacts with gate.

Example:
Original PIN of GSM gate is 0000. SIM card, which you use in cell phone in GSM gate has PIN 1234 and is blocked by PIN.

Insert the SIM card into the mobile phone, but do not connect the GB 051 connector yet. Insert the required PIN in the mobile phone (e.g. 1234). Go into the mobile phone menu and select Settings – Security – Codes – Change PIN then insert the old PIN and the new PIN according to the mobile phone instructions.

Send a command SMS message with text XX0000PINV1234 from cell phone or Internet on cell phone number in the unit.

As soon as a confirmation SMS message comes back to sender's cell phone the new PIN is set to value "1234"

User can verify the PIN change by switching the phone off.

Initialization:
In case you forget current PIN of GSM Remote Supervision you have no choice than to carry out initialization of parameters to original set-up from production. It shall be carried out in following steps:

1. Disconnect external power supply. (throw up power adapter)
2. Disconnect the mobile phone connector.
3. Interconnect inputs GROUND and INIT (terminals No. 1 and 2, see Chapter 3.2.) on terminal board
4. Connect external power supply. (throw in power adapter)
5. Remove connection GROUND – INIT
6. Disconnect external power supply. (throw up power adapter)
7. Connect the mobile phone to the GB 051 unit – the PIN must be preset to value "0000".
8. Connect external power supply.
9. PIN and other required parameters have to be set-up again

4.2. RESET of GSM Remote Supervision

If you want to carry out remote reset of counters of days and months in operation then send SMS message with Command RESET. Command is rejected if GB 051 runs from backup battery.

Command	XXppppRESET
Pppp	Four digits of current PIN

Function is equivalent to disconnection of gate from power supply (also backup one) and its re-connection.

4.3. INIT – Re-initialization of Values Set from Production

In case you lost view of GB 051 set-up you can carry out remote re-initialization of parameter values set in production.

Command	XXppppINIT
Pppp	Four digits of current PIN

GSM Remote Supervision will be set to initial set-up from production.
Sender of Command receives message about correct reception of Command.

In case you do not know pre-set PIN or you are not able to program for another reason then carry out hardware initialization described in chapter 4.1.

4.4. ICALL – Regular Calling Free of Charge

If you want to be informed free of charge about correct function of GB 051 in set regular intervals following parameters provide it:

Command	XXppppICALL␣number [*1)]
Pppp	Four digits of current PIN
Number	Maximum 14 digits of number of any phone which allows display of caller's number [*2)]

*1) The space is between key word of command „ICALL" and value of parameter "number"
*2) Number can be entered in national format – e.g. 606445566 but also in international format – e.g. +420606445566.

Command	XXppppICALLINT␣h [*1)]
Pppp	Four digits of current PIN
H	Length of intervals in hours – time interval of two successive calls. Value from 1 to 240 hours can be set. 168 hours set from production.

*1) The space is between key word of command „ICALLINT" and value of parameter „h"

After set-up of these parameters calling to set number will be automatically activated. Phone rings only 5s and does not await pick-up. This way record about calling from GB 051 is entered on display of cell phone without any charges unless called party picks it up.

If you want to deactivate this functions set, send the command without parameter – for example: XXppppICALL or XXpppICALLINT without further parameters.

4.5. MCALL – Monthly Calling

Some GSM operators require requires to carry out at least one paid phone connection in 3 months from this card in order to keep the SIM card working – otherwise the prepaid credit might expire. In order to prevent this from happening it is possible to enter a number into GB 051, which the unit will automatically call every month of operation, the phone call will be hung up 10 seconds after pick up.

Command	XXppppMCALL␣number [*1)]
Pppp	Four digits of current PIN
Number	Maximum 14 digits of number of any phone [*2)]

*1) The space is between key word of command „MCALL“ and value of parameter „h“

*2) Number can be entered in national format – e.g. 606445566 but also in international format – e.g. +420606445566. No number is activated from production.

After entering this parameter GB 051 calls set number once a month in order to spend at least one tariff impulse.

If you want to use this service it is recommended to set-up number of your fax or number of time information. It is not recommended to set your cell phone number because GB 051 does not use real time and call can come during night.

If you want to deactivate this function set command without parameter – for example XXppppMCALL without further parameters.

4.6. ACALL – Automatic Alarm Calling

By activation of any of SMS inputs set phone number is automatically chosen together with sending SMS message. Dispatched SMS message can be highlighted if you set ACALL number identical to SMSNO number or you can report alarm on fixed phone lines where SMS messages cannot be received. After answering warning tone is generated into speaking line.

Command	XXppppACALLi␣number [*1)]
Pppp	Four digits of current PIN
i	Number of input: 1 to 8
Number	Maximum 14 digits of number of any phone which allows display of caller's number [*2)]

*1) The space is between key word of command „ACALLi“ and number

*2) Number can be entered in national format – e.g. 606445566 but also in international format – e.g. +420606445566. No number is activated from production.

If you want to deactivate this function set command without parameter – tm. XXppppACALLi without further parameters.

4.7. INFOSMS – Sending of Information Messages about Operation

GB 051 allows set-up of one cell phone number where all information SMS messages about change of PIN, reset, initialization, power supply failure, change in configuration, operation time and input activation are subsequently sent.

Command	XXppppINFOSMS␣number (no number activated from production) [*1)]
Pppp	Four digits of current PIN
Number	Maximum 14 digits of cell phone number [*2)]

*1) The space is between key word of command „INFOSMS“ and number

*2) Number can be entered in national format – e.g. 606445566 but also in international format – e.g. +420606445566.

If you want to deactivate this function set command without parameter – tm. XXppppINFOSMS without further parameters.

4.8. SMSINT – Interval for Dispatch of SMS Messages about Operation

Interval for sending regular SMS messages to INFOSMS number, which include time of operation, can be set:

Command	XXppppSMSINTVn (interval of one day is set from production) *1)
pppp	Four digits of current PIN
Number	Number from 1 to 30. It is interval for sending successive message about operation.

*1) The space is between key word of command „SMSINT“ and value of parameter „n“

4.9. ALARMSMS – Alarm SMS Messages

When one of 8 inputs is activated GB 051 allows in addition to phone call to common ACALL number also sending one of 8 prepared texts of SMS message to two cell phone numbers.

Change of texts of SMS messages:

Command *1)	**Initial set-up**	**Input**	**Order on the terminal board**
XXppppSMSTXT1V“text“	ALARM1	IO1	1
XXppppSMSTXT2V“text“	ALARM2	IO2	2
XXppppSMSTXT3V“text“	ALARM3	IO3	3
XXppppSMSTXT4V text“	ALARM4	IO4	4
XXppppSMSTXT5V“text“	ALARM5	IO5	5
XXppppSMSTXT6V“text“	ALARM6	IO6	6
XXppppSMSTXT7V“text“	ALARM7	IO7	8
XXppppSMSTXT8V“text“	ALARM8	IO8	9
pppp	Four digits of current PIN		
text	4 - 144 digits, always put in quotes, ?=question		

*1) The space is between key word of command “SMSTXT” and “text”

Change of numbers for sending ALARM SMS messages

Text of SMS message No. 1, 2, 3, 4, 5, 6, 7 or 8 will be sent by activation of input No. 1, 2, 3, 4, 5, 6, 7 or 8 (by connection with terminal No. 7 – ground) on terminal board of GB 051. Each prepared text of SMS message of particular input can be sent to two cell phone numbers.

No number is activated from production. These numbers can be set:

Command *1)	Activated by input No.:	Order on the terminal board
XXppppSMSNOA1Vnumber	IO1	1
XXppppSMSNOB1Vnumber	IO1	1
XXppppSMSNOA2Vnumber	IO2	2
XXppppSMSNOB2Vnumber	IO2	2
XXppppSMSNOA3Vnumber	IO3	3
XXppppSMSNOB3Vnumber	IO3	3
XXppppSMSNOA4Vnumber	IO4	4
XXppppSMSNOB4Vnumber	IO4	4
XXppppSMSNOA5Vnumber	IO5	5
XXppppSMSNOB5Vnumber	IO5	5
XXppppSMSNOA6Vnumber	IO6	6
XXppppSMSNOB6Vnumber	IO6	6
XXppppSMSNOB7Vnumber	IO7	8
XXppppSMSNOB7Vnumber	IO7	8
XXppppSMSNOB8Vnumber	IO8	9
XXppppSMSNOB8Vnumber	IO8	9
pppp	Four digits of current PIN	
Number *2)	Maximum 14 digits of cell phone number	

*1) The space is between key word of command and number

*2) Number can be entered in national format – e.g. 606445566 but also in international format – e.g. +420606445566.

If you want to deactivate the number set command without number – tm. e.g. XXppppSMSNOA3 without further parameters.

4.10. OUT – Set-up of Level of Outputs by SMS messages

Required logical level of outputs No. 1 to 8 can be set by incoming SMS message. If output is set to logical value 0 it is not possible to activate it as input.

Command *1)	Output	Order on the terminal board
XXppppOUT1V**y**	IO1	1
XXppppOUT2V**y**	IO2	2
XXppppOUT3V**y**	IO3	3
XXppppOUT4V**y**	IO4	4
XXppppOUT5V**y**	IO5	5
XXppppOUT6V**y**	IO6	6
XXppppOUT7V**y**	IO7	8
XXppppOUT8V**y**	IO8	9
pppp	Four digits of current PIN	
y	Figure 0 or 1 determines logical level of output By sending value 0 output is set to 0V By sending value 1 output is set to 4-5V	

*1) The space is between key word of command and value of parameter “y”

All outputs are set to logical level 1 (4–5 V) from production.
Inputs can be therefore activated.

If you only want to change value of output regardless of previous state send command without parameter “y” – e.g. XXppppOUT5 changes value of output No. 5 to reverse.

Newly set actual values of all 8 inputs/outputs are sent back to sender and to INFOSMS number.

4.11. LIST – Detection of Set-up

If you want to find out which values of parameters are set in GB 051 it is possible to send control SMS message, which initiates sending messages with detailed description of set-up back to sender.

Command	XXppppLISTV*i* *1)
pppp	Four digits of current PIN
i	IO number: 1 to 8, with no parameter will return the shared configuration

*1) The space is between key word of command “LIST” and “i”

SMS command messages intended for getting parameter configuration of each input/output 1–8:
The GB 051 unit will return sender a message with the required configuration information related to the particular IO:

- Actual value of logical level of the particular input.
- Pre-set phone number for ALARM call.
- Pre-set number A for ALARM SMS for the particular input.
- Pre-set SMSNO B for the input.
- Pre-set SMSTXT – text of the message of the input.

IO value, acall, aSMSnoA, aSMSnoB, SMStxt

In case the command SMS message is sent with no parameter, the GB 051 unit will respond to the sender with message containing five basic configuration data:

infoSMS number, infoSMS interval, icall number, icall interval, mcall number

4.12. CALLBACK – Monitoring of Protected Area

If you want to find out by listening – e.g. during alarm – what is happening in place of installation it is possible to require, by SMS message, to get further call from GB 051 with switched-on microphone for room monitoring.

Command *1)	XXppppCALLBACKVnumber
pppp	Four digits of current PIN
Number	Maximum 14 digits of any phone number *2)

*1) The space is between key word of command „CALLBACK“ and number.
*2) If no number is specified GB 051 calls back the number of sender of SMS command. Number can be entered in national format – e.g. 606445566 but also in international format – e.g. +420606445566.

The call will take 255 seconds unless you end it sooner by hang-up.

Sensitivity of cell phone built-in microphone might be relatively low. Therefore it is necessary to select a suitable placement of the unit in order to use this feature.

5. Programming from PC

Comfortable way of setting of all GB 051 parameters from PC by the means of configuration program and serial cable with converter can be used. Program and cable can be bought additionally as set for configuration from PC – supply No. ED 051 011.

Program shall be installed under MS WINDOWS by command A:\setup. Connect GB 051 through interconnecting cable with converter ED 051 011. Program allows reading of actual configuration from GB 051, changing of configuration and exporting of new configuration into GB 051. Configuration can also be saved and read from files.

6. Operation during Failure of External Power Supply

During failure of external power supply GB 051 operates, with unchanged output, for approx. 12 hours from battery. However, it is not able to switch on the cell phone without external power supply and therefore command RESET is ignored.

Configuration, which you enter in GB 051, will be saved in memory – type EEPROM – for arbitrarily long time even during disconnection or total discharge of backup battery.

7. List of Programming Commands – Control SMS Messages

Description		Command XXpppp *1)	Range	Set
Set PIN		PINVnnnn	nnnn 4 digits of PIN	0000
RESET of GSM Supervision		RESET	–	–
Initialisation of parameters		INIT	–	–
Regular information calling		ICALLVn	n= max. 14 digits	–
Length of interval of calling		ICALLINTVh	h= 1–240 (hours)	168
Monthly calling		MCALLVn	n= max. 14 digits	–
Alarm calling		ACALLiVn	n= max. 14 digits	–
Information number		INFOSMSVn	n= max. 14 digits	–
Interval of sending information SMS messages		SMSINTVn	n= 1–255 (days)	7
Alarm SMS messages		SMSTXT1V"text" SMSTXT2V"text" SMSTXT3V"text" SMSTXT4V"text" SMSTXT5V "text" SMSTXT6V "text" SMSTXT7V"text" SMSTXT8V"text"	text of 4–144 digits put in " "	ALARM1 ALARM2 ALARM3 ALARM4 ALARM5 ALARM6 ALARM7 ALARM8
Numbers for sending ALARM SMS messages	IO1 SMS n A IO1 SMS n B IO2 SMS n A IO2 SMS n B IO3 SMS n A IO3 SMS n B IO4 SMS n A IO4 SMS n B IO5 SMS n A IO5 SMS n B IO6 SMS n A IO6 SMS n B IO7 SMS n A IO7 SMS n B IO8 SMS n A IO8 SMS n B	SMSNOA1Vn SMSNOB1Vn SMSNOA2Vn SMSNOB2Vn SMSNOA3Vn SMSNOB3Vn SMSNOA4Vn SMSNOB4Vn SMSNOA5Vn SMSNOB5Vn SMSNOA6Vn SMSNOB6Vn SMSNOA7Vn SMSNOB7Vn SMSNOA8Vn SMSNOB8Vn	n= max. 14 digits	– – – – – – – – – – – – – – – –
Set output No.1 (terminal No.1) Set output No.2 (terminal No.2) Set output No.3 (terminal No.3) Set output No.4 (terminal No.4) Set output No.5 (terminal No.5) Set output No.6 (terminal No.6) Set output No.7 (terminal No.8) Set output No.8 (terminal No.9)		OUT1Vy OUT2Vy OUT3Vy OUT4Vy OUT5Vy OUT6Vy OUT7Vy OUT8Vy	y= 0 output in logical value 0 y= 1 output in logical value 1 without y – logical value 0	1 1 1 1 1 1 1 1
Find out set-up		LISTVn	n= input No. 1 to 8 Without n – returns common set-up	–
Call with monitoring		CALLBACKVn	n= max. 14 digits Without no. calls back	–

*1) Always start with text XXpppp, where "pppp" is PIN of GB 051

8. Basic Technical Parameters

GB 051	
ALARM tone	400 Hz
Inputs of SMS messages No. 1–8	
Logical 0	0–0,5 V
Logical 1	4–6 V
Outputs of SMS messages No. 1–8	
Logical 0	max. 0,8 V for Iz= 5 mA
Logical 1	3,5–4,5 V for Iz= 0,03 mA
GSM network	
GSM	900/1800 MHz
SIM card	Plug-in
Device	
Power supply voltage	10–16 V DC
Peak power consumption during charging	350 mA (for 12 V)
Max. time of charging	4 hours
Power consumption with charged battery	< 20 mA
Time of operation from backup battery	Min. 12 hours
Size	65 × 70 × 17 mm
Weight	50 g
Operational temperatures	from +5 to +40 °C

GUARANTEE CERTIFICATE

Product name: .....…..... Type: ……...…….....……..

Production number: ….....…. Date of sale: .....…….....……..

Signature: …….....…….. Seller (stamp): ……..

Information about guarantee repairs:

Date of receipt	Date of return	Signature	Description of defect

Producer: LEVEL ltd., Plhovská 1997, 547 01 Náchod. Czech Rep.
Tel/Fax No.: +420 491-44 66 11. e-mail: level@levelna.cz, www.levelna.cz

GUARANTEE CONDITIONS

Length of guarantee period is 24 months from the date of sale.
Guarantee applies only to goods registered or identified by company LEVEL.

Guarantee repair will be carried out at latest within 10 working days after receipt of defective goods by company LEVEL provided that spare part is disposable in store. If it is not possible alternative solution will be offered to user for time of repair.

Guarantee repairs will be carried out in company seat.

Technician is solely responsible for choosing the way of transport.

Guarantee is not provided in following cases:
Loss or replacement of Guarantee Certificate – or its additional correction.
Damage of device caused by natural disaster or damage of device during transport.
Damage caused by unsuitable positioning, unsuitable handling, operation of device in unsuitable conditions.
Any unauthorized repair or adjustment carried out on device.
Damage or removal of sealing labels.

Guarantee does not apply to expendable property – dyeing ribbons, floppy discs, etc. It does not apply to malfunction caused by installed software or interference, either. Company is not responsible for possible losses, which originate from device failure either.

Guarantee does not apply to malfunction caused by change of external conditions as change in legislation, change of phone network, change of supply network, etc.

Guarantee is exerted by hand-over of completely filled-in Guarantee Certificate and hand-over of device intended for repair including equipment.

STATEMENT OF CONSENSUS

We, LEVEL Ltd.., Plhovská 1997, 547 01 Náchod, Registration No.: 47469374, V.A.T. No.: 243-47469374,

declare hereby our exclusive responsibility that hereinafter mentioned product meets requirements of technical regulations, that product is save when used on specified conditions and that we took all actions, which ensure consensus of all products of hereinafter mentioned type placed on the market with technical documentation and with requirements of relevant government regulation.

Product: **Remote Supervision**
Type: **GB 051 010**

Product is designed for telecommunication purposes

Way of consensus judging:	§12/4/a of law No.22/1997 of Col.
Above mentioned product is conformable with	§8 of law No.22/1997 of Col.
and government regulation	No.169/1997 of Col.
and standards for electromagnetic compatibility	ČSN 342895; ČSN EN 55 022class B
and government regulation for electrical safety	No. 168/1997 of Col.

Additional information:
Power supply is carried out by safe voltage of 10–16 V (direct current) Device is compatible only with cell phone Siemens C35, M35 and S35.

Released in:	Náchod	**Name:**	Ing. Michal Falta
Date of release:	01.08.2003	**Function:**	Managing Director

Stamp and signature:

GB 051@1.02 © LEVEL, 2003
LEVEL Ltd, Plhovská 1997, Náchod 547 01
CZECH REPUBLIC
E-mail level@levelna.cz
www.levelna.cz