SCD-XA5400ES

SERVICE MANUAL

Ver. 1.0 2008.08

US Model
Canadian Model
AEP Model

Model Name Using Similar Mechanism	NEW
Mechanism Type	CDM66F-DVBU101
Optical Pick-up Block Name	KHM-313CAB

SPECIFICATIONS

When a Super Audio CD is played

Playing frequency range	2 Hz to 100 kHz
Frequency response	2 Hz to 50 kHz (–3 dB)
Dynamic range	110 dB or more
Total harmonic distortion rate	0.0012 % or less
Wow and flutter	Value of measurable limit (±0.001 % W. PEAK) or less

When a CD is played

Frequency response	2 Hz to 20 kHz (±0.5 dB)
Dynamic range	100 dB or more
Total harmonic distortion rate	0.0017 % or less
Wow and flutter	Value of measurable limit (±0.001 % W. PEAK) or less

Output jacks

	Jack type	Output level	Load impedance
ANALOG OUT UN-BALANCED	Phono jacks	2 Vrms (at 50 kilohms)	Over 10 kilohms
ANALOG OUT BALANCED	XLR	2 Vrms (at 50 kilohms)	Over 600 ohms
HDMI	HDMI		
DIGITAL OUT (CD) OPTICAL*	Square optical output connector	–18 dBm	(Light emitting wave length: 660 nm)
DIGITAL OUT (CD) COAXIAL*	Coaxial output connector	0.5 Vp-p	75 ohms
PHONES	Stereo phone jack	5 mW	32 ohms

* Outputs only the audio signals of the CD

General

Laser Diode Properties	Emission duration: Continuous Laser Output*: Less than 44.6 µW * This output is the value measurement at a distance of 200 mm from the objective lens surface on the Optical Pick-up Block with 7 mm aperture.
Power requirements	North America: 120 V AC, 60 Hz Europe: 230 V AC, 50/60 Hz
Power consumption	25 W
Power consumption (during standby mode)	0.5 W
Dimensions (w/h/d)	430 × 124 × 390 mm (17 × 5 × 15 3/8 inch) incl. projecting parts
Mass (approx.)	10.2 kg (22 lb 8 oz)

Supplied accessories

Audio connecting cord	Red and White plugs (1)
Remote commander	RM-ASU042 (1)
AC power cord	(1)
Battery	R6 (size-AA) (2)

Design and specifications are subject to change without notice.

SUPER AUDIO CD PLAYER

9-889-205-01 **Sony Corporation**
2008H05-1 **Audio&Video Business Group**

SONY®

NOTES ON CHIP COMPONENT REPLACEMENT

- Never reuse a disconnected chip component.
- Notice that the minus side of a tantalum capacitor may be damaged by heat.

FLEXIBLE CIRCUIT BOARD REPAIRING

- Keep the temperature of soldering iron around 270 °C during repairing.
- Do not touch the soldering iron on the same conductor of the circuit board (within 3 times).
- Be careful not to apply force on the conductor when soldering or unsoldering.

CAUTION
Use of controls or adjustments or performance of procedures other than those specified herein may result in hazardous radiation exposure.

CLASS 1 LASER PRODUCT
LUOKAN 1 LASERLAITE
KLASS 1 LASERAPPARAT

This appliance is classified as a CLASS 1 LASER product. This marking is located on the rear exterior.

SAFETY CHECK-OUT

After correcting the original service problem, perform the following safety check before releasing the set to the customer:
Check the antenna terminals, metal trim, “metallized” knobs, screws, and all other exposed metal parts for AC leakage.
Check leakage as described below.

LEAKAGE TEST

The AC leakage from any exposed metal part to earth ground and from all exposed metal parts to any exposed metal part having a return to chassis, must not exceed 0.5 mA (500 microamperes.). Leakage current can be measured by any one of three methods.

1. A commercial leakage tester, such as the Simpson 229 or RCA WT-540A. Follow the manufacturers’ instructions to use these instruments.
2. A battery-operated AC milliammeter. The Data Precision 245 digital multimeter is suitable for this job.
3. Measuring the voltage drop across a resistor by means of a VOM or battery-operated AC voltmeter. The “limit” indication is 0.75 V, so analog meters must have an accurate low-voltage scale. The Simpson 250 and Sanwa SH-63Trd are examples of a passive VOM that is suitable. Nearly all battery operated digital multimeters that have a 2 V AC range are suitable. (See Fig. A)

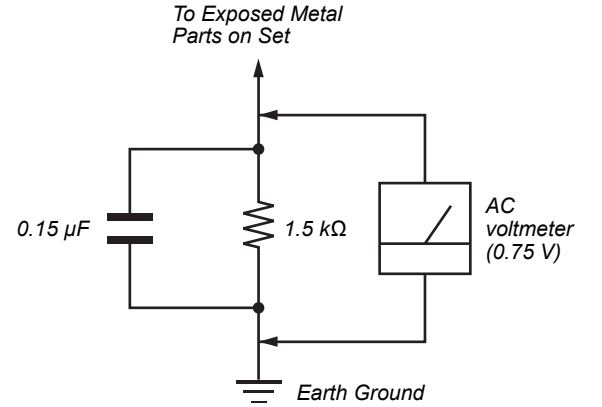

Fig. A. Using an AC voltmeter to check AC leakage.

SAFETY-RELATED COMPONET WARNING!

COMPONENTS IDENTIFIED BY MARK ⚠ OR DOTTED LINE WITH MARK ⚠ ON THE SCHEMATIC DIAGRAMS AND IN THE PARTS LIST ARE CRITICAL TO SAFE OPERATION. REPLACE THESE COMPONENTS WITH SONY PARTS WHOSE PART NUMBERS APPEAR AS SHOWN IN THIS MANUAL OR IN SUPPLEMENTS PUBLISHED BY SONY.

ATTENTION AU COMPOSANT AYANT RAPPORT À LA SÉCURITÉ!

LES COMPOSANTS IDENTIFIÉS PAR UNE MARQUE ⚠ SUR LES DIAGRAMMES SCHÉMATIQUES ET LA LISTE DES PIÈCES SONT CRITIQUES POUR LA SÉCURITÉ DE FONCTIONNEMENT. NE REMPLACER CES COMPOSANTS QUE PAR DES PIÈCES SONY DONT LES NUMÉROS SONT DONNÉS DANS CE MANUEL OU DANS LES SUPPLÉMENTS PUBLIÉS PAR SONY.

TABLE OF CONTENTS

Accessories are given in the last of the electrical parts list.

SECTION 1
SERVICING NOTES

NOTES ON HANDLING THE OPTICAL PICK-UP BLOCK OR BASE UNIT

The laser diode in the optical pick-up block may suffer electrostatic break-down because of the potential difference generated by the charged electrostatic load, etc. on clothing and the human body.
During repair, pay attention to electrostatic break-down and also use the procedure in the printed matter which is included in the repair parts.
The flexible board is easily damaged and should be handled with care.

NOTES ON LASER DIODE EMISSION CHECK

The laser beam on this model is concentrated so as to be focused on the disc reflective surface by the objective lens in the optical pickup block. Therefore, when checking the laser diode emission, observe from more than 30 cm away from the objective lens.

UNLEADED SOLDER

Boards requiring use of unleaded solder are printed with the lead-free mark (LF) indicating the solder contains no lead.
(**Caution:** Some printed circuit boards may not come printed with the lead free mark due to their particular size)

: LEAD FREE MARK

Unleaded solder has the following characteristics.

- Unleaded solder melts at a temperature about 40 °C higher than ordinary solder.
  Ordinary soldering irons can be used but the iron tip has to be applied to the solder joint for a slightly longer time.
  Soldering irons using a temperature regulator should be set to about 350 °C.
  Caution: The printed pattern (copper foil) may peel away if the heated tip is applied for too long, so be careful!
- Strong viscosity
  Unleaded solder is more viscous (sticky, less prone to flow) than ordinary solder so use caution not to let solder bridges occur such as on IC pins, etc.
- Usable with ordinary solder
  It is best to use only unleaded solder but unleaded solder may also be added to ordinary solder.

NOTE OF REPLACING THE IC1103 ON THE MAIN BOARD

IC1103 on the MAIN board cannot exchange with single. When this part is damaged, exchange the entire mounted board.

MODEL IDENTIFICATION
– Rear View –

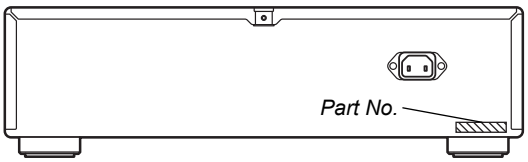

Model	Part No.
US and Canadian models	3-873-299-1□
AEP model	3-873-299-2□

Compatible Disc Types

You can play the following types of discs on this player.
- Super Audio CDs
- Audio CDs
- DSD Discs

This player cannot play the following discs.
- CD-ROMs (MP3, JPEG, etc.)
- DVDs
- DTS-CDs
- DualDiscs, etc.

If you try to play CD-ROMs/DVDs, the error message "Cannot Play" or "No Disc" will appear.
For DTS-CDs/DualDiscs, refer to their respective notes below.

Music discs encoded with copyright protection technologies

This product is designed to play back discs that conform to the Compact Disc (CD) standard.
Recently, various music discs encoded with copyright protection technologies are marketed by some record companies. Please be aware that among those discs, there are some that do not conform to the CD standard and may not be playable by this product.

Notes on CD-R/CD-RW playback

Discs recorded on CD-R/CD-RW drives may not be played back because of scratches, dirt, recording condition, or the drive's characteristics. Besides, the discs, which are not yet finalized at the end of recording, cannot be played back. In these cases, "Reading" will remain or "Cannot Play" will appear on the display.

Note on DTS-CDs

DTS signals are output from the DIGITAL OUT (CD) jacks only.
The DTS signals must be decoded on a DTS-compliant digital device to be listened to.

Note on DualDiscs

A DualDisc is a two sided disc product which mates DVD recorded material on one side with digital audio material on the other side. However, since the audio material side does not conform to the Compact Disc (CD) standard, playback on this product is not guaranteed.

Note on DSD Discs

A DSD Disc is a disc recorded in the DSF file format.
This player can play DSF files that you have recorded on DVD-ROM compatible DVD-R, DVD-RW, DVD+R and DVD+RW discs. For details on DSD Discs.

HOW TO OPEN THE TRAY WHEN POWER SWITCH TURNS OFF

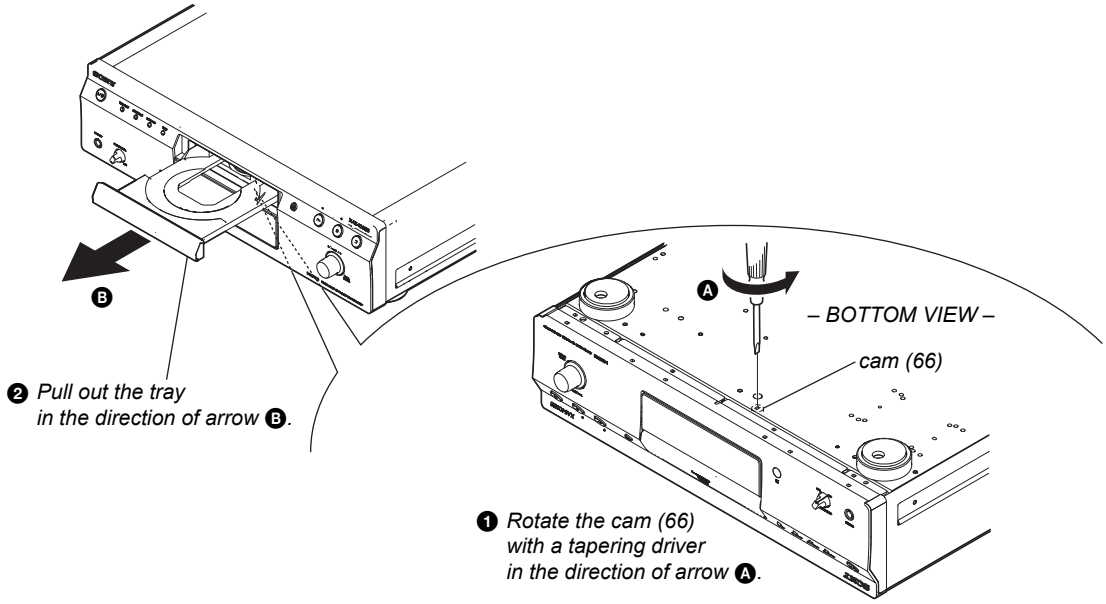

MAIN BOARD SERVICE POSITION

In checking the MAIN board, prepare jig (extension cable J-2501-102-A: 1 mm Pitch, 13 cores, Length 300 mm).

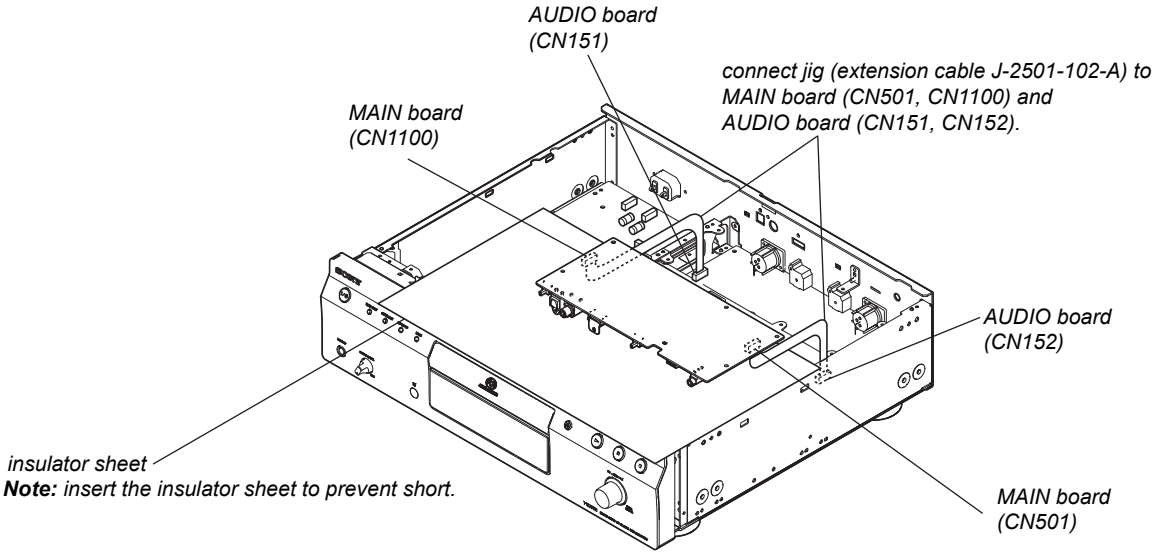

PRECAUTION WHEN REMOVING OPTICAL PICK-UP BLOCK OR DMB-FIT BOARD

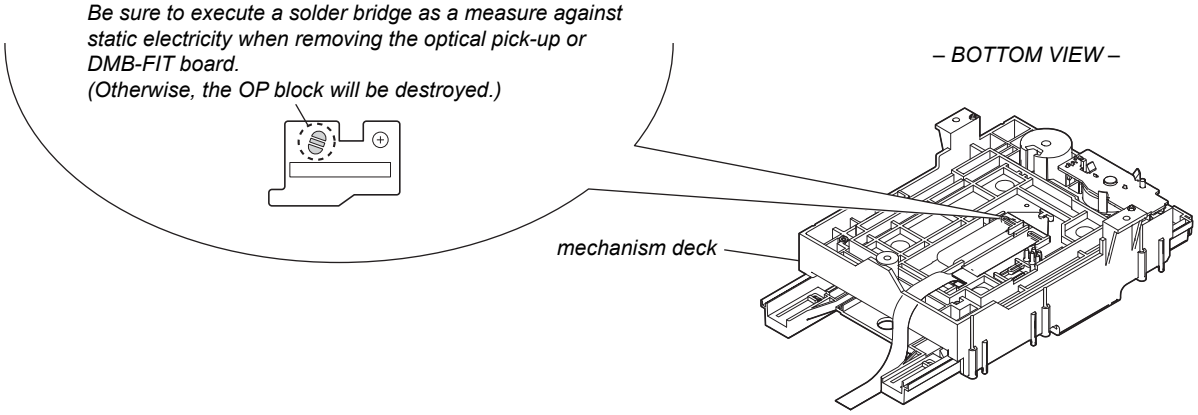

SECTION 2
GENERAL

This section is extracted from instruction manual.

Front Panel

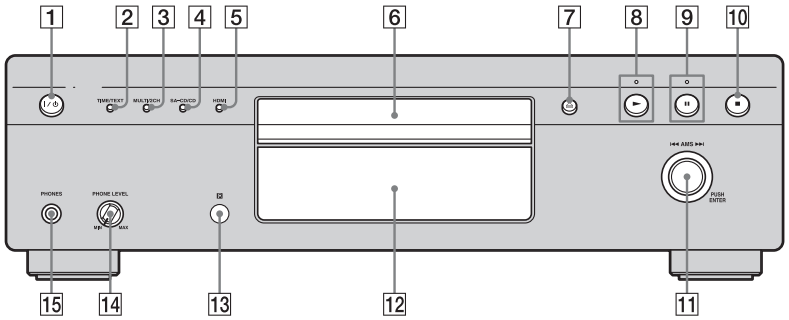

1 **I/⏻ (power) switch**
Turns the power of the player on or off.
To let the player enter power-saving mode (standby mode), press I/⏻ (power) on the remote or on the player.

2 **TIME/TEXT button**
Switches the playing time of the track, the remaining time of the disc, or TEXT information on the display.

3 **MULTI/2CH button**
Selects the playback area when a disc with the 2-channel area and the multi-channel area (page 8) is loaded.

4 **SA-CD/CD button**
Switches between the Super Audio CD layer and the CD layer of a hybrid disc.

5 **HDMI button/lamp**
Sets whether the audio signal is output from the HDMI OUT jack or not.
When the lamp is lit, sound is output from the HDMI OUT jack.
When the lamp is not lit, sound is output from the ANALOG OUT jacks and DIGITAL OUT (CD) jacks.

6 **Disc tray**
Holds a disc.

7 **⏏ button**
Opens and closes the disc tray.

8 **► button and lamp**
Plays a disc. The lamp lights up during playback.

9 **❚❚ button and lamp**
Pauses playback. The lamp lights up during playback pause.

10 **■ button**
Stops playback

11 **⏮ AMS ⏭ dial (AMS: Automatic Music Sensor)**
Selects a track.

12 **Display window**
Displays information on the disc or current track.

13 **Remote sensor**
Receives the signal from the remote.

14 **PHONE LEVEL**
Adjusts the headphones volume.

15 **PHONES jack**
Connects the headphones.

Rear Panel

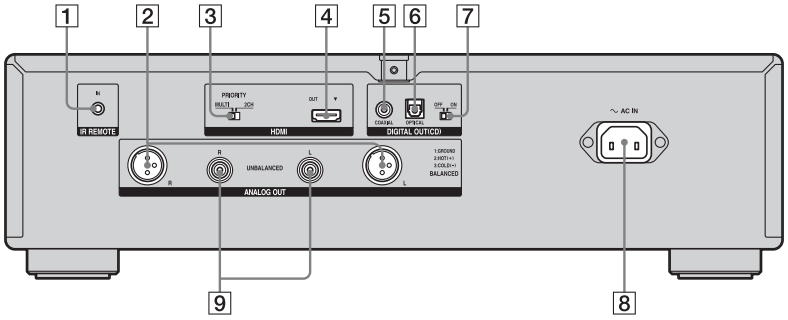

1 **IR REMOTE IN jack**
Equipped on the models for the U.S. and Canada only.
Connects an IR repeater.

2 **ANALOG OUT BALANCED L/R jacks**
Connects a component with XLR input jacks, such as stereo amplifiers, etc., using an XLR (balanced) cable (not supplied).

3 **HDMI PRIORITY MULTI/2CH switch**
When both multi-channel area and 2-channel area are recorded on a Super Audio CD layer, sets the area that is given priority to be played back.

4 **HDMI OUT jack**
Connects components with HDMI jacks, such as HDMI-compliant amplifiers, etc.

5 **DIGITAL OUT (CD) COAXIAL jack**
Connects a component with the coaxial digital input jack, such an MD deck, etc.

6 **DIGITAL OUT (CD) OPTICAL jack**
Connects a component with the optical digital input jack, such an MD deck, etc.

7 **DIGITAL OUT (CD) ON/OFF switch**
Sets whether audio signals are output from the DIGITAL OUT (CD) jacks or not.

8 **AC IN jack**
Connects the supplied AC power cord (mains lead).

9 **ANALOG OUT UNBALANCED L/R jacks**
Connects a component with analog input jacks, such as stereo amplifiers, etc., using an audio connecting cord.

About the IR REMOTE jack

You can operate the player without pointing the remote toward the remote sensor of the player if you connect an IR repeater (not supplied) to the IR REMOTE jack.
Use an IR repeater when you install the player in a place where signals from the remote cannot reach.

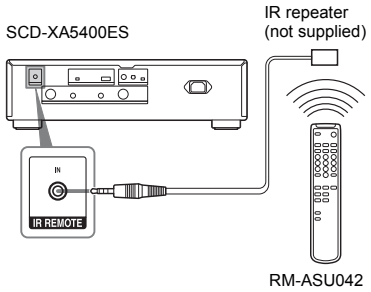

Remote

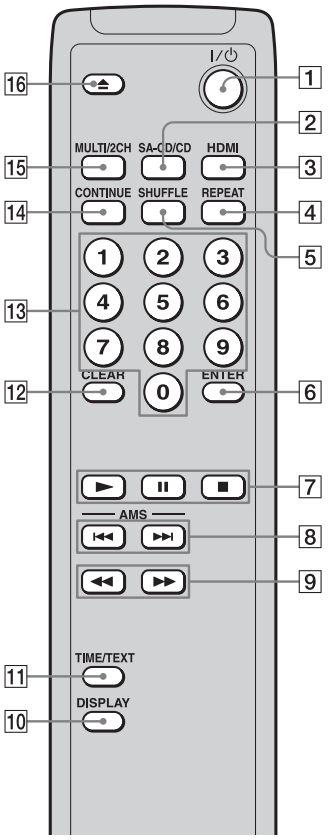

1 **I/⏻ (power) switch**
Turns the power of the player on or off.
To let the player enter power-saving mode (standby mode), press I/⏻ (power) on the remote or on the player.

2 **SA-CD/CD button**
Switches between the Super Audio CD layer and the CD layer of a hybrid disc.

3 **HDMI button**
Sets whether the audio signal is output from the HDMI OUT jack or not.

4 **REPEAT button**
Performs Repeat Play.

5 **SHUFFLE button**
Performs Shuffle Play.

6 **ENTER button**
Select a track directly.

7 **► button**
❚❚ button
■ button
Plays back discs, pauses playback, and stops playback.

8 **AMS ⏮/⏭ buttons (AMS: Automatic Music Sensor)**
Selects a track.

9 **◀◀/▶▶ buttons**
Fast-forwards or fast-reverses the track during playback.

10 **DISPLAY button**
Turns the display information off or on.

11 **TIME/TEXT button**
Switches the playing time of the track, the remaining time of the disc, or TEXT information on the display.

12 **CLEAR button**
Resumes Continuous Play from Repeat Play or Shuffle Play.

13 **Number buttons**
Select a track directly.

14 **CONTINUE button**
Resumes Continuous Play from Shuffle Play.

15 **MULTI/2CH button**
Selects the playback area when a disc with the 2-channel area and the multi-channel area is loaded.

16 **⏏ button**
Opens or closes the disc tray.

Inserting batteries into the remote

Insert two R6 (size-AA) batteries into the battery compartment with the + and – correctly oriented to the markings. When using the remote, point it at the remote sensor ℝ on the player.

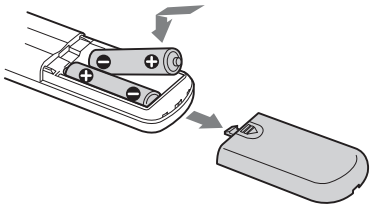

Tip

Under normal conditions, the batteries should last for about 6 months. When the remote no longer operates the player, replace both batteries with new ones.

Notes

- Do not leave the remote in an extremely hot or a humid place.
- Do not drop any foreign object into the remote casing, particularly when replacing the batteries.
- Do not use a new battery with an old one.
- Do not expose the remote sensor to direct sunlight or lighting apparatus. Doing so may cause a malfunction.
- If you do not intend to use the remote for an extended period of time, remove the batteries to avoid possible damage from battery leakage and corrosion.

SECTION 3
DISASSEMBLY

- This set can be disassembled in the order shown below.

3-1. DISASSEMBLY FLOW

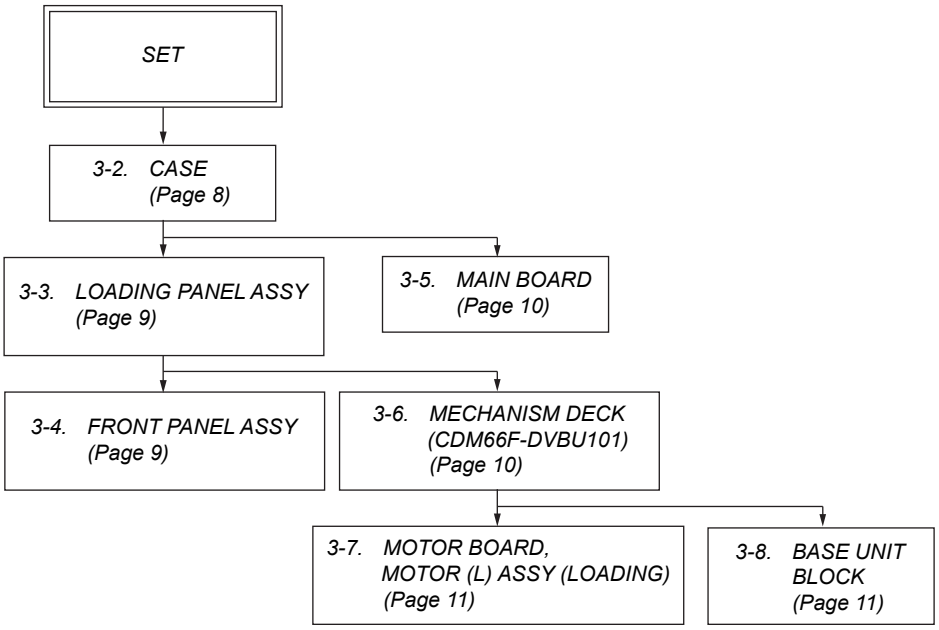

Note: Follow the disassembly procedure in the numerical order given.

3-2. CASE

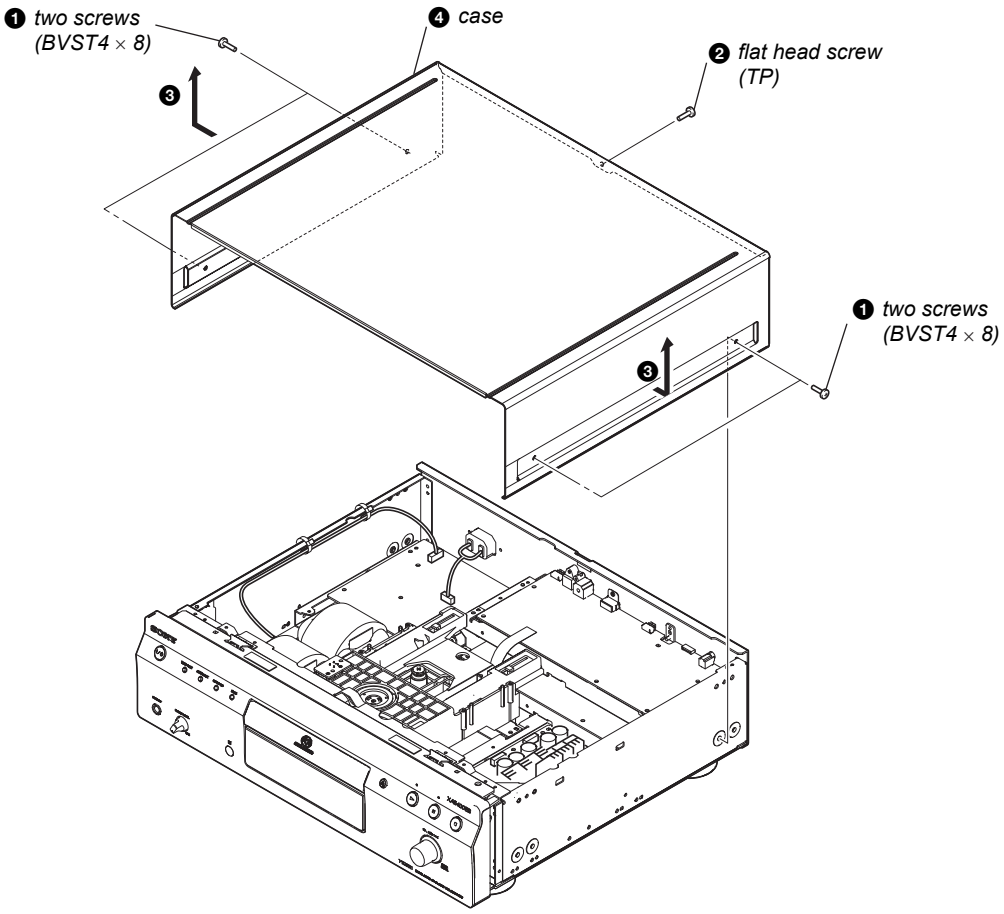

3-3. LOADING PANEL ASSY

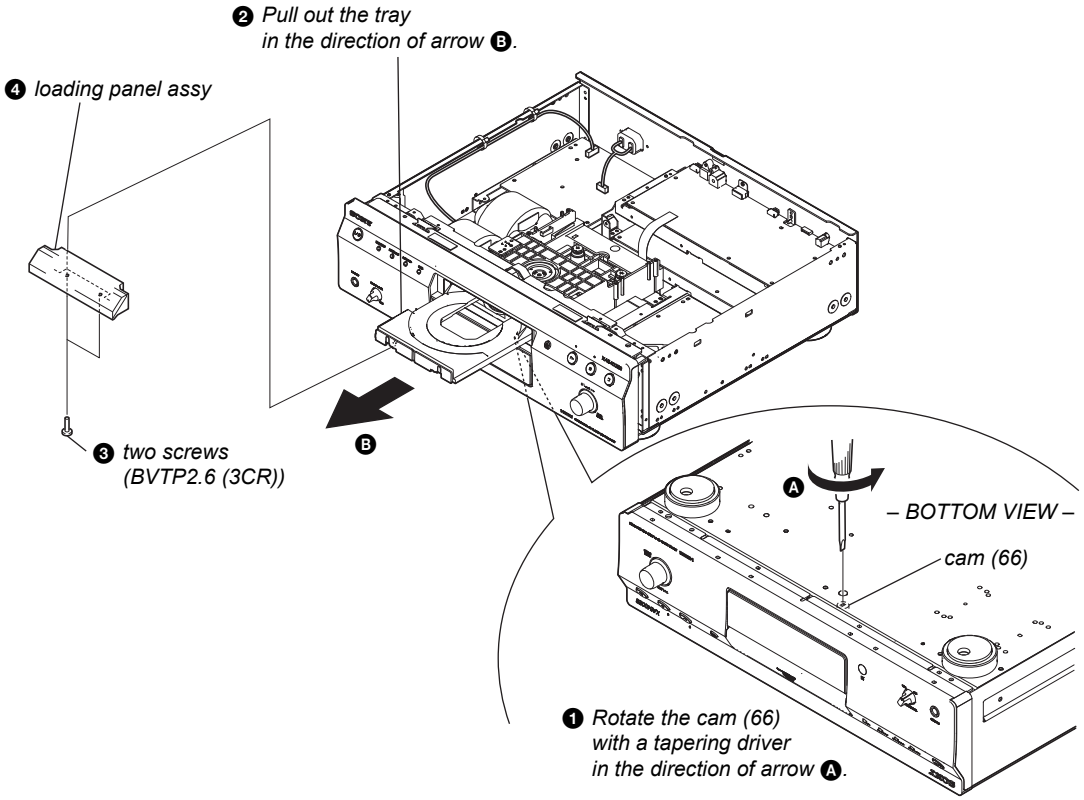

3-4. FRONT PANEL ASSY

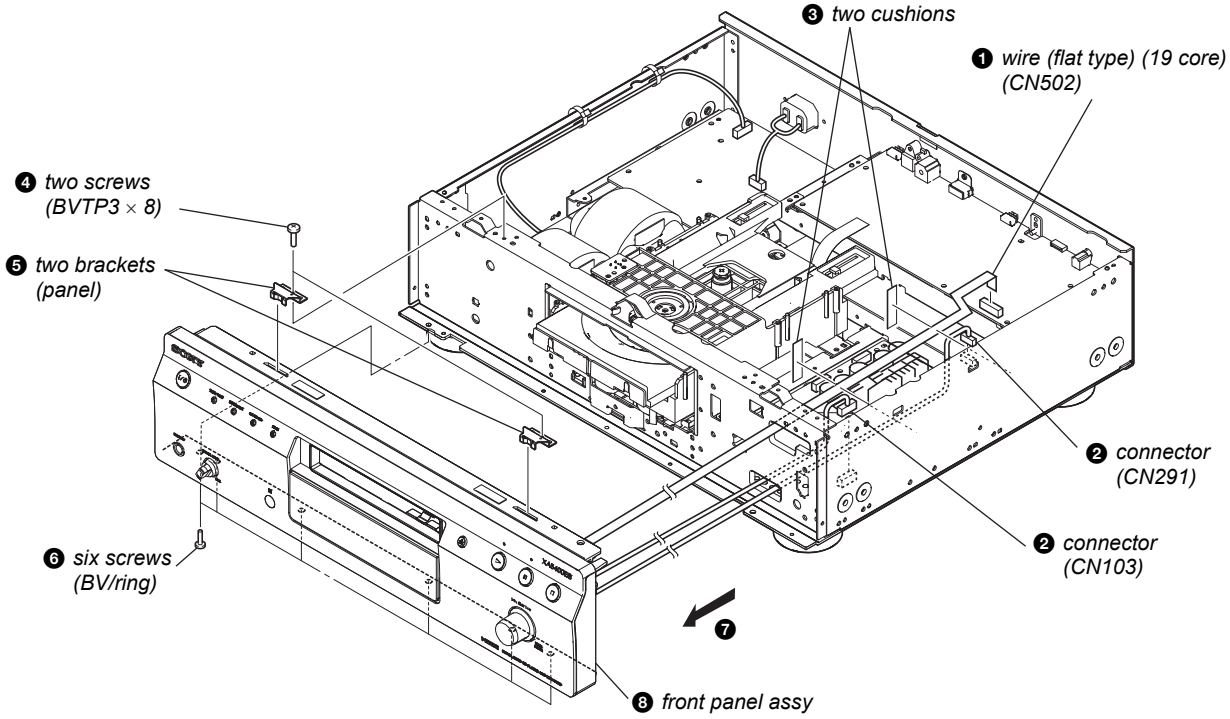

3-5. MAIN BOARD

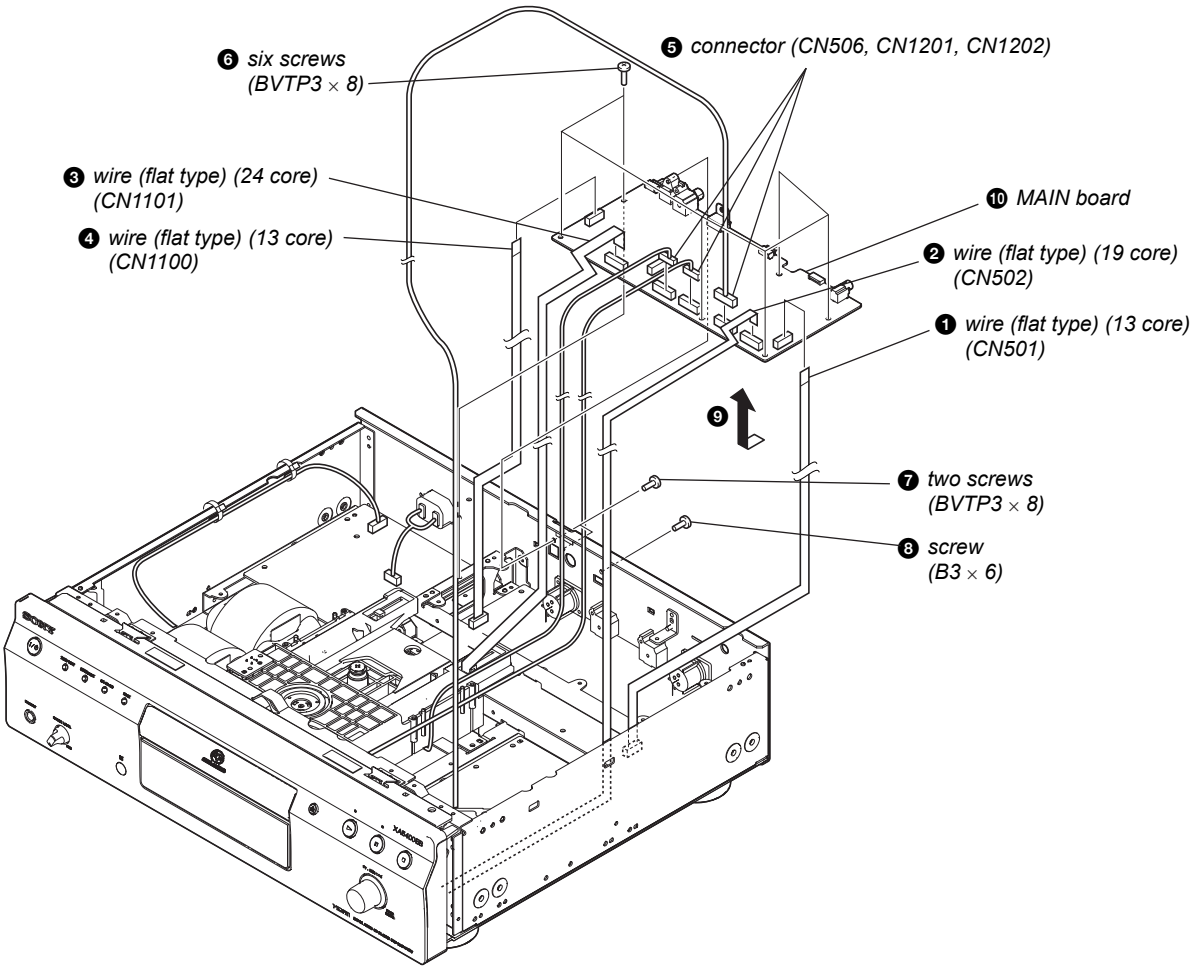

3-6. MECHANISM DECK (CDM66F-DVBU101)

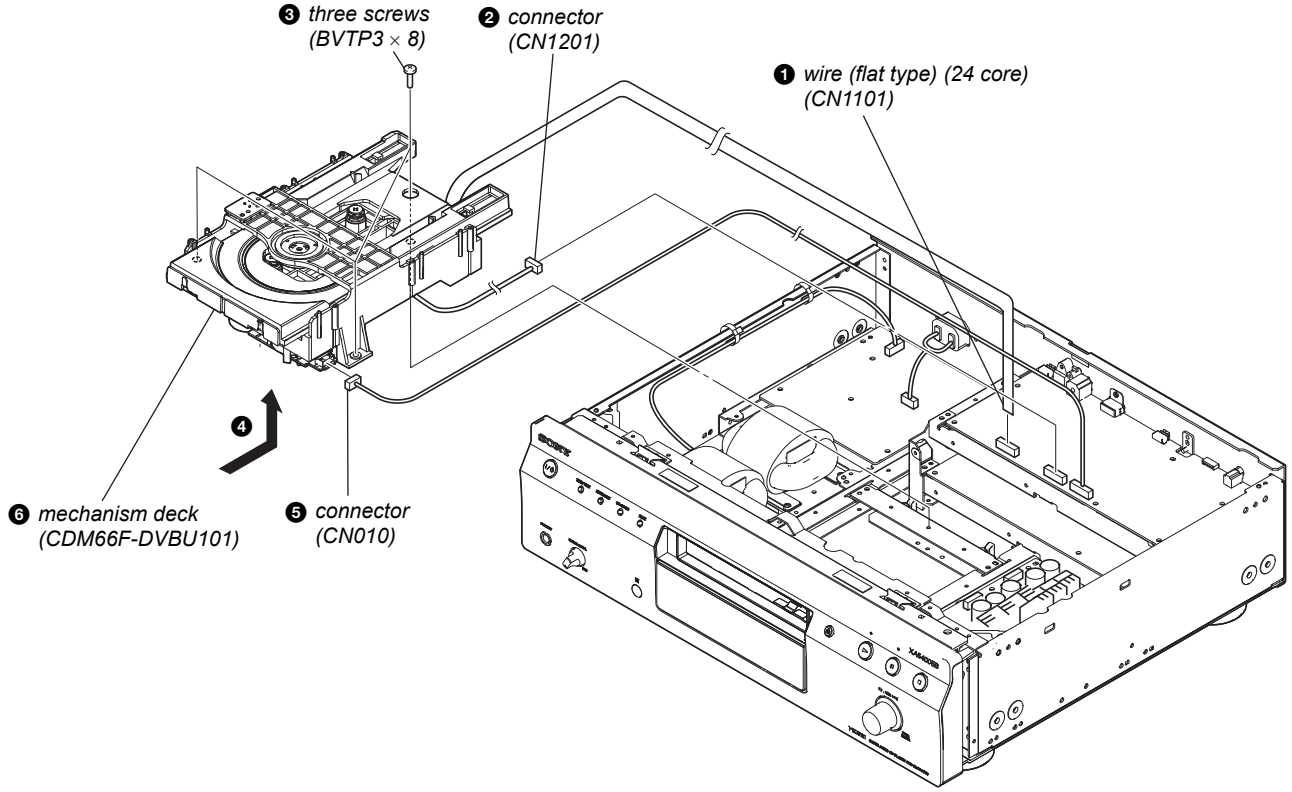

3-7. MOTOR BOARD, MOTOR (L) ASSY (LOADING)

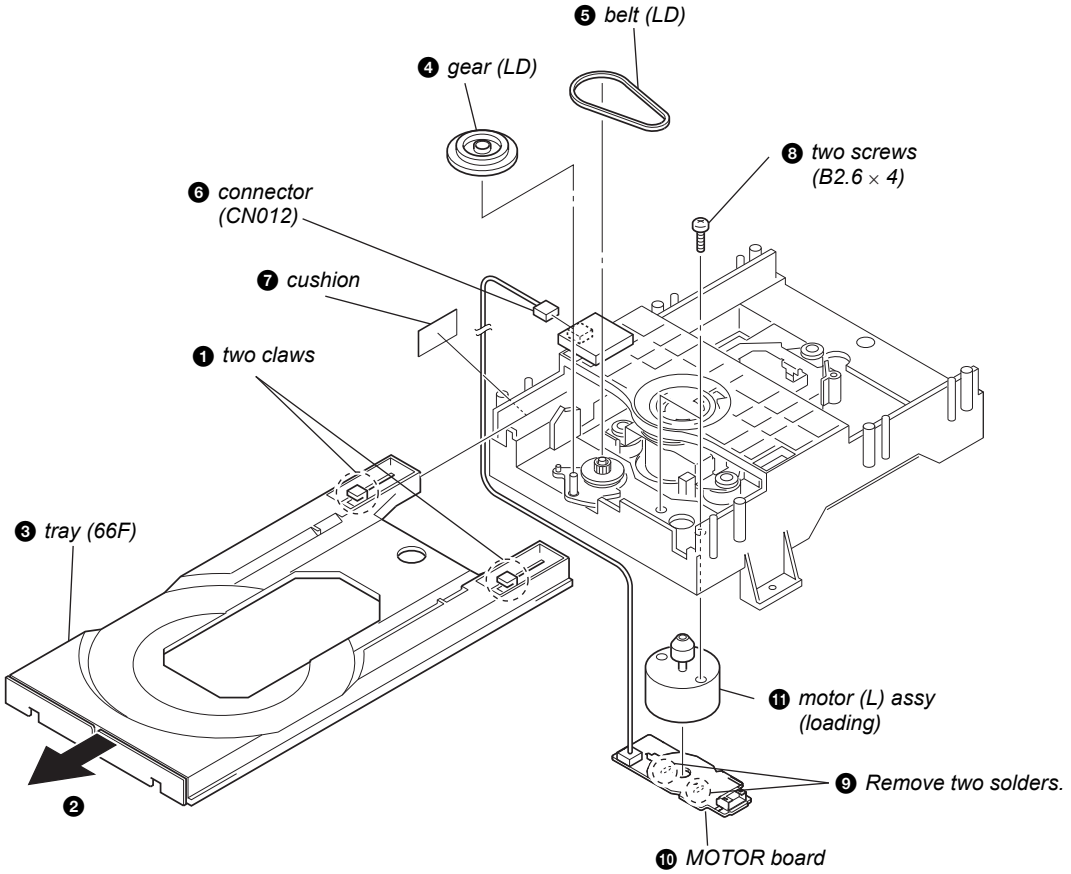

3-8. BASE UNIT BLOCK

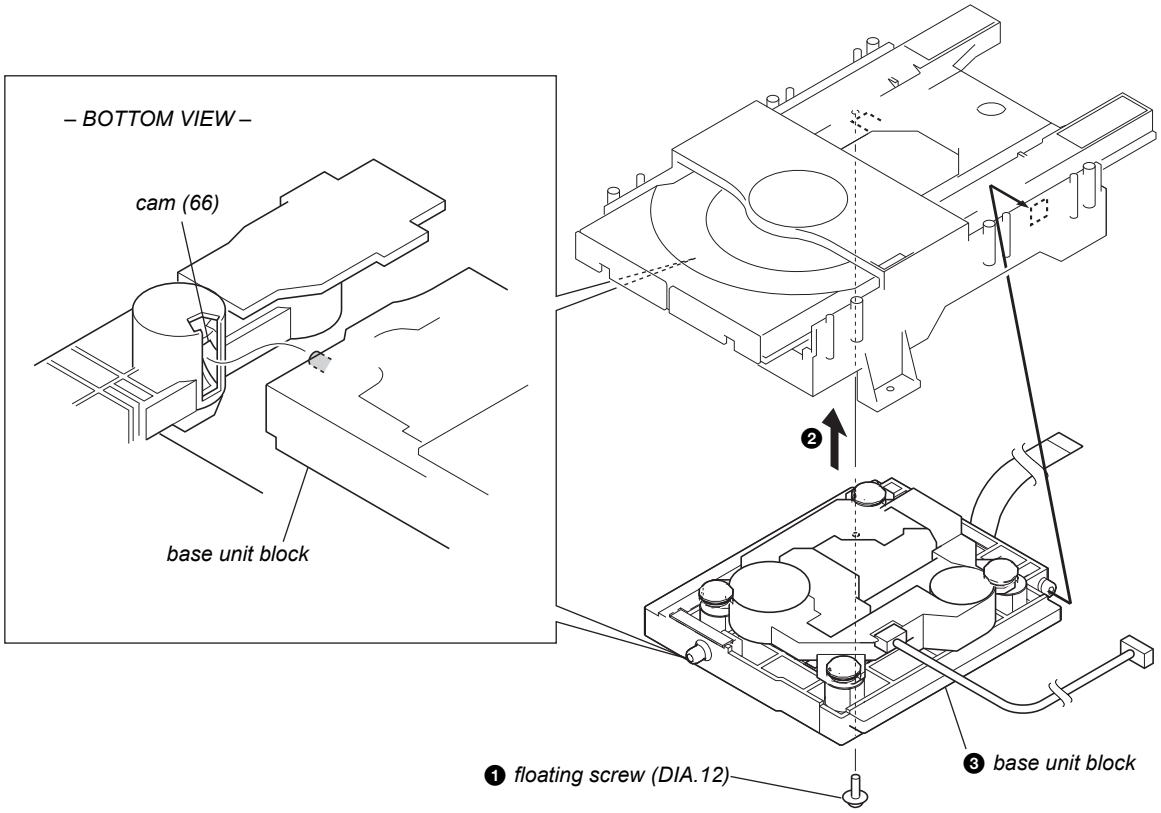

SECTION 4
TEST MODE

Note 1: According to the following procedures when you ship it (Return it to the customer).
1. SERVICE MODE of step 6 and 7 (DVD EEPROM clearness)
2. COLD RESET

Note 2: "DVD" displayed by the test mode shows "super audio CD".

COLD RESET

The cold reset clears data stored in microcomputer's RAM to initial conditions.

Procedure:

1. Press three buttons of [■], [≜] and [I/⏻] on the set simultaneously.
2. "COLD RESET" appears on the fluorescent indicator tube. After that, the fluorescent indicator tube becomes blank then the system becomes standby states.

PANEL TEST

Procedure:

1. Press the [I/⏻] button to turn on.
2. Press three buttons of [■], [⏮ AMS ⏭, PUSH ENTER] and [I/⏻] on the set simultaneously.
3. All segments turned on.
4. When [■] button on the set is pressed after half segments in fluorescent indicator tube light up. If you press [■] button on the set again, another half segments in fluorescent indicator tube light up. Pressing [■] button on the set again would cause all segments in fluorescent indicator tube light up.
5. Press [►] button on the set, in the key check mode, the fluorescent indicator tube displays "K0 J0".
6. Each time an another button is pressed, "KEY" value increases. However, once a button is pressed, it is no longer taken into account. When all keys are pressed correctly, "K10" and "OK" are alternately displayed.
7. When the [⏮ AMS ⏭, PUSH ENTER] dial on the set is turned in the direction of right,"J0" is changed to "J1", then ... "J9". When the [⏮ AMS ⏭, PUSH ENTER] dial on the set is turned in the direction of left, "J0" is changed to "J9", then ... "J0".
8. To release from this mode, press three buttons in the same manner as step 1.

CDM TEST

Aging test mode of CDM.

Procedure:

1. Press three buttons of [❚❚], [≜] and [I/⏻] on the set simultaneously.
2. After the "Open" display blinks, "SINGLE LOADING" is displayed on the fluorescent indicator tube.
3. Press [⏮ AMS ⏭, PUSH ENTER] and then aging starts.
4. To stop aging, Press [■] button.
5. To release from this mode, press three buttons of [❚❚], [≜] and [I/⏻] on the set simultaneously.

SERVICE MODE

When HDMI is connected in this mode, various information is displayed on the fluorescent indicator tube. Refer to the following table for displayed various information.

EEPROM CLEAR

Procedure:

1. Press two buttons of [■] and [≜] on the set simultaneously for 3 seconds.
2. Various information is displayed on the fluorescent indicator tube.
3. When [↑] button is pressed of the remote commander. Rebooting emergence fuctor appears of toggle article number on the fluorescent indicator tube.
4. When [→] button is pressed of the remote commander. MTK communication error factor appears of toggle article number on the fluorescent indicator tube.
5. When [↓] button is pressed of the remote commander. Power ON/OFF error factor appears of toggle article number on the fluorescent indicator tube.
6. Press the button in order of the [4] → [Time/Text] → [CLEAR] on the remote commander of attachment.
7. The message "Complete" is displayed on the fluorescent indicator tube, and DVD EEPROM is cleared.
8. To release from this mode, disconnect the power cord.

Note: Don't press the [I/⏻] button when to release from this mode. Necessarily disconnect the power cord. The set doesn't operate when turning off power with [I/⏻] button of the set.

List of trouble log

Note: "nnn" of toggle article number is a generation frequency of the error.

Type	Test key (Remote commander)	Toggle article number	Content
Rebooting emergence (Rebooting emergence factor)	Test key2 (↑)	2Annn	It was not possible to communicate with MTK five seconds more continuously
		2Bnnn	Compulsion power off demand was received from MTK
		2Cnnn	Only MTK reset it (Distination, model and region for are the disagreements)
		2Dnnn	Fails in the start of MTK
		2Ennn	Fails in the switch of the input mode of MTK
		2Fnnn	Input mode of MTK changed without permission
		2Gnnn	Reacts to the key notification no though the communication with MTK is alive
Serial communications (MTK communication error factor)	Test key3 (→)	3Annn	It was not possible to communicate with MTK with 48ms
		3Bnnn	A non-standard packet length was received (Excluding 16 bytes)
		3Cnnn	Checksum NG
		3Dnnn	Type of the communication header is NG
		3Ennn	PEQ data reading operation (8032→DVDLIB) terminated abnormally
		3Fnnn	PEQ data writing operation (DVDLIB→8032) terminated abnormally
MTK power control (Power ON/OFF error factor)	Test key2 (↓)	4Annn	Fails in AC ON Initial
		4Bnnn	Fails in power on of MTK
		4Cnnn	Initialization response of CDM is abnormal
		4Dnnn	CDM mechanism error notification is received
		4Ennn	Input mode is NG MTK is started
		4Fnnn	MTK input mode switch at time fails usually
		4Gnnn	Fails in power off of MTK
		4Hnnn	Fails in power off of CDM

DVD SERVICE MODE

Note: DVD SERVICE MODE is a service mode of super audio CD.

When the DVD service mode is operated, the following, remote commander is necessary.
(The DVD service mode cannot be operated by remote commander to which this machine is attached)
Remote commander (RM-ASP003) (for US, Canadian models):
Part No. 1-479-272-11
Remote commander (RM-ASP004) (for AEP model):
Part No. 1-479-272-21

Note: Above-mentioned remote commander is one example. If it is the one printed under a remote commander as "DVD", any remote commander can be operated.

1. DVD Service Mode General Description

This mode let you make diagnosis and adjustment easily by using the remote commander and the TV screen for HDMI input. The instructions, diagnostic results, etc. are given on the on-screen display.
Be sure to execute the IOP measurement when a base unit is replaced.

2. Enterring DVD Service Mode

Procedure:

1. Press the [I/⏻] button to turn the power on.
2. Press two buttons of [■] and [≜] on the set simultaneously for 3 seconds
3. The message "SERVICE IN" appears on the fluorescent indicator tube and top menu of the Remocon Diagnosis Menu appears on the on-screen display on the TV screen for HDMI input as follows. The model name, IF-con version and Syscon version are displayed at the bottom of the on-screen display.

```
        Remocon Diagnosis Menu

0. External Chip Check
1. Servo Parameter Check
2. Drive Manual Operation
3. Emergency History
4. Version Information



Model Name :xxxx_xx
IF-con:Ver.xx.xx(xxxx)
Syscon:Ver.x.xxx
```

4. To execute each function, press its number by using numeric button on the remote commander.
5. To release from this mode, disconnect the power cord.

Note: Don't press the [I/⏻] button when to release from this mode. Necessarily disconnect the power cord. The set doesn't operate when turning off power with [I/⏻] button of the set.

3. Executing IOP Measurement

In order to execute IOP measurement, the following standard procedures must be followed.

Procedure:

1. From the top menu of Remocon Diagnosis Menu, select "2 Drive Manual Operation" by pressing the [2] button on the remote commander. The following screen appears on the on-screen display

```
        Drive Manual Operation

1. Servo Control
2. Track/Layer Jump
3. Manual Adjustment
4. Mecha test mode
5. MIRR time Adjust
0. Return to Top Menu
```

2. Select "3. Manual Adjustment" by pressing the [3] button on the remote commander. The following screen appears on the on-screen display.

```
            Manual Adjust
1. Track Balance Adjust:
2. Track Gain Adjust:
3. Focus Balance Adjust:
4. Focus Gain Adjust:
5. Eq Boost Adjust:
6. Iop:
7. TRV. Level:
8. S curve(FE) Level:
9. RFL(PI) Level:
0. MIRR Time:
[↑][↓]  Change Value
[RETURN]Return to previous menu
```

3. Select "6. Iop:" by pressing [6] button on the remote commander.
4. Wait until a hexadecimal number appear in the on-screen display as below.

```
            Manual Adjust
1. Track Balance Adjust:
2. Track Gain Adjust:
3. Focus Balance Adjust:
4. Focus Gain Adjust:
5. Eq Boost Adjust:
6. Iop: xx
7. TRV. Level:
8. S curve(FE) Level:
9. RFL(PI) Level:
0. MIRR Time:
[↑][↓] Change Value
[RETURN]Return to previous menu
```

5. Convert data from hexadecimal to decimal by using conversion table.
6. If the value is smaller than 93 (decimal), then it is OK. However if the value is higher than 93, then BU (base unit) is defective and need to be change.

7. Press the [↶ RETURN] button on the remote commander to return to previous menu.
8. Press the [0] button on the remote commander to return to the top menu of Remocon Diagnosis Menu.
9. Disconnect the power cord to turn off.

Note: Don't press the [I/⏻] button when to release from this mode. Necessarily disconnect the power cord. The set doesn't operate when turning off power with [I/⏻] button of the set.

4. Checking Emergency History

To check the emergency history, please follow the following procedure.

Procedure:

1. From the top menu of Remocon Diagnosis Menu, select "3. Emergency History" by pressing the [3] button on the remote commander. The following screen appears on the on-screen display.

```
          Emg. History Check
Laser Hours     CD    999h  59min
                DVD   999h  59min

01. 01 05 04 04      00 92 46 00
    00 00 00 00      00 00 23 45

02. 02 02 01 01      00 A9 4B 00
    00 00 00 00      00 00 23 45


[Next]Next page [Prev]Prev page
[0]Return to Top Menu
```

2. You can check the total time when the laser is turned on during playback of super audio CD and CD from the above menu. The maximum time, which can be displayed are 999h 59min.
3. You can check the error code of latest 10 emergency history from the above menu. To view the previous or next page of emergency history, press the [⏮] or [⏭] button on the remote commander. The error code consists of three kinds of error codes.

A. Error code

```
        Example of Error code

01. 01 05 04 04      00 92 46 00
    00 00 00 00      00 00 23 45
```

The meaning of error code is as below:

01: Communication error (No reply from syscon)
02: Syscon hung up
03: Power OFF request when syscon hung up
19: Thermal shutdown
24: MoveSledHome error
25: Mechanical move error (5 changer)
26: Mechanical move stack error
30: DC motor adjustment error
31: DPD offset adjustment error
32: TE balance adjustment error
33. TE sensor adjustment error
34. TE loop gain adjustment error
35. FE loop gain adjustment error
36. Bad jitter after adjustment
40. Focus NG
42. Focus layer jump NG
51: Spindle stop error
52. Open kick spindle error
60: Focus on error
61: Seek fail error
62: Read Q data/ID error
70: Lead in data read fail
71: TOC read time out (CD)
80: Can't buffering
81: Unknown media type

B. Parameter of error code

This is the detail of error code.

```
        Example of Error code

01. 01 05 04 04      00 92 46 00
    00 00 00 00      00 00 23 45
```

C. Time of error code

This is the laser time when an error occurred.

```
        Example of Error code

01. 01 05 04 04      00 92 46 00
    00 00 00 00      00 00 23 45
```

To Clear the Laser Hour

Press the [DISPLAY] button on the remote commander and then press the [CLEAR] button on the remote commander. The data for both super audio CD and CD data are reset.

```
          Emg. History Check
Laser Hours     CD      0h   0min
                DVD     0h   0min

01. 01 05 04 04      00 92 46 00
    00 00 00 00      00 00 23 45

02. 02 02 01 01      00 A9 4B 00
    00 00 00 00      00 00 23 45


[Next]Next page [Prev]Prev page
[0]Return to Top Menu
```

To Clear the Emergency History

Press the [TOP MENU] button on the remote commander and then press the [CLEAR] button on the remote commander. The error code for all emergency history would be reset.

```
          Emg. History Check
Laser Hours     CD    999h  59min
                DVD   999h  59min

01. 00 00 00 00      00 00 00 00
    00 00 00 00      00 00 00 00

02. 00 00 00 00      00 00 00 00
    00 00 00 00      00 00 00 00


[Next]Next page [Prev]Prev page
[0]Return to Top Menu
```

SECTION 5
ELECTRICAL ADJUSTMENT

To Execute the Initialize Setup Data
Procedure:

1. Press the [MENU] button on the remote commander and then press the [CLEAR] button on the remote commander. The following screen appears on the on-screen display.

```
          Emg. History Check
Laser Hours     CD    999h  59min
                DVD   999h  59min

Initialize setup data...





[Next]Next page [Prev]Prev page
[0]Return to Top Menu
```

2. The screen after a while returns to former display.

To Return to the Top Menu of Remocon Diagnosis Menu
Press the [0] button on the remote commander.

5. Checking Version Information
To check the version information, please follow the following procedure.
Procedure:

1. From the top menu of Remocon Diagnosis Menu, select "4. Version Information" by pressing the [4] button on the remote commander. The following screen appears on the on-screen display.

```
          Version information

Firm(Main): Ver. X.XXXX
Firm(Sub): XX.XX
RISC: XXXXXX
8032: XXXXXX
Audio DSP: XX.XX.XX.XX
Servo DSP: XX.XX.XX.XX



[0]Return to Top Menu
```

2. To return to the top menu of Remocon Diagnosis Menu, press the [0] on the remote commander.

When the base unit is replaced, perform the adjustment and the measurement as shown below in this order.

EXECUTING IOP MEASUREMENT (See page 14)

SECTION 6
DIAGRAMS

6-1. BLOCK DIAGRAM - SA-CD/CD SERVO Section -

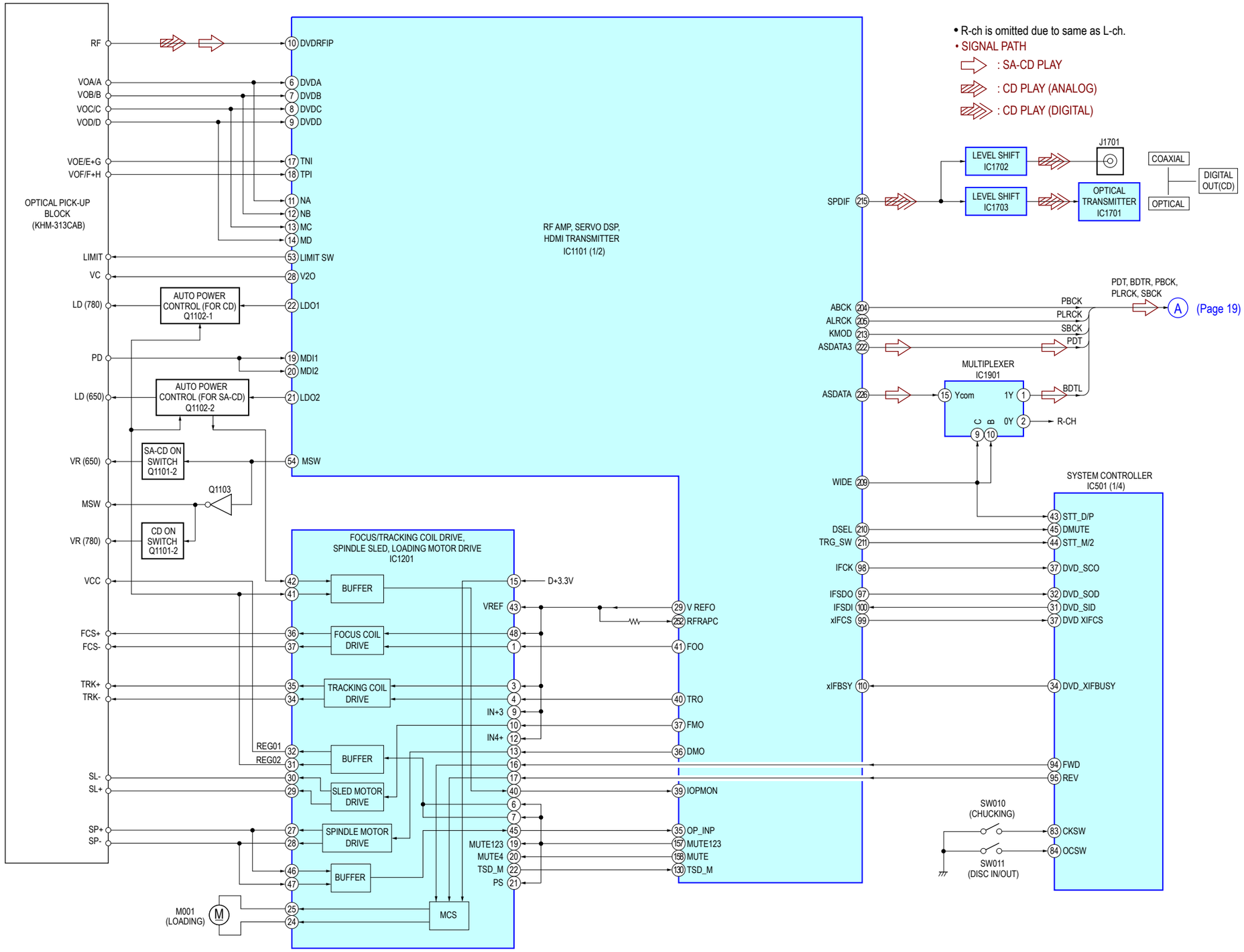

6-2. BLOCK DIAGRAM - HDMI Section -

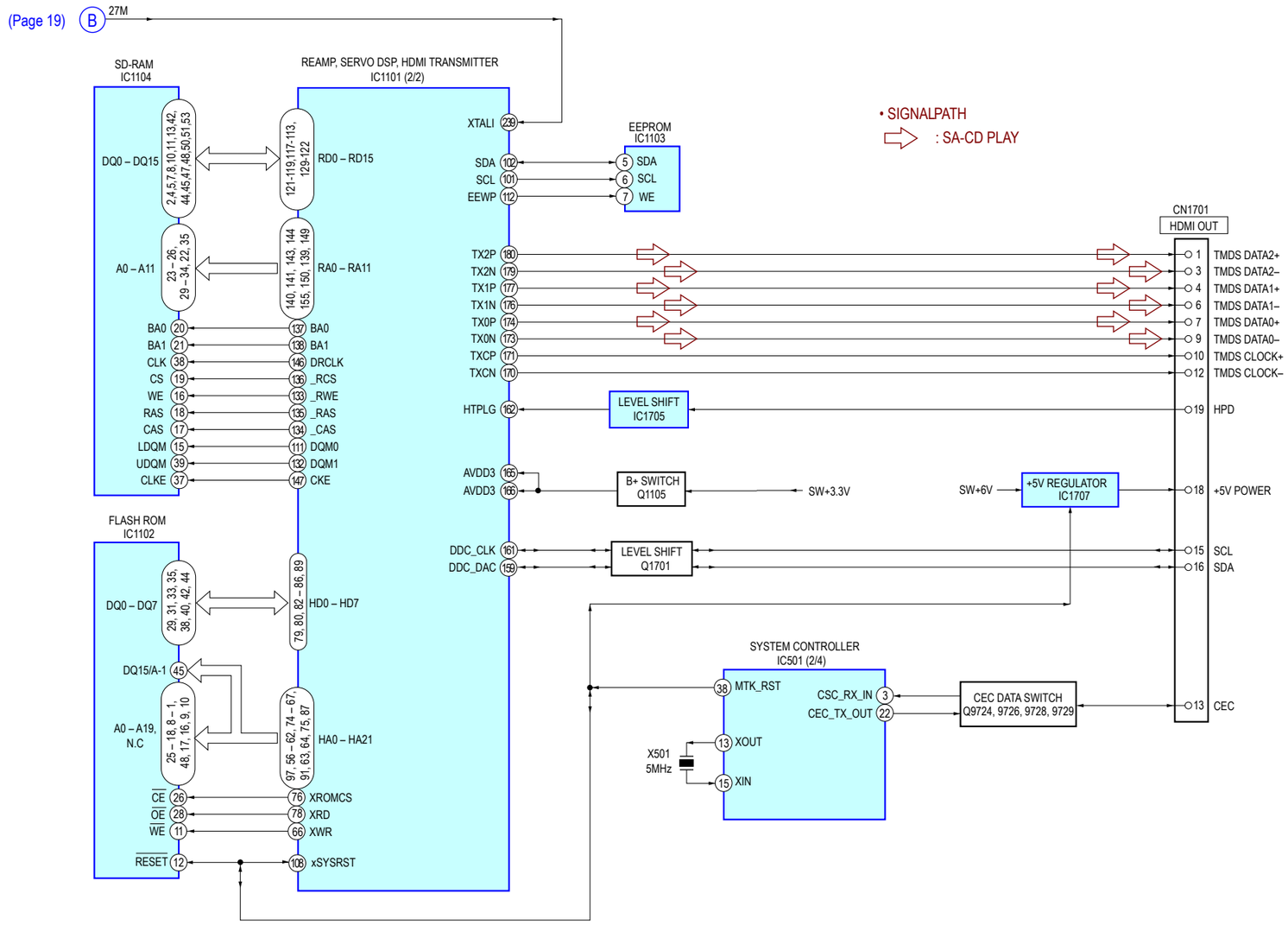

6-3. BLOCK DIAGRAM - MAIN Section -

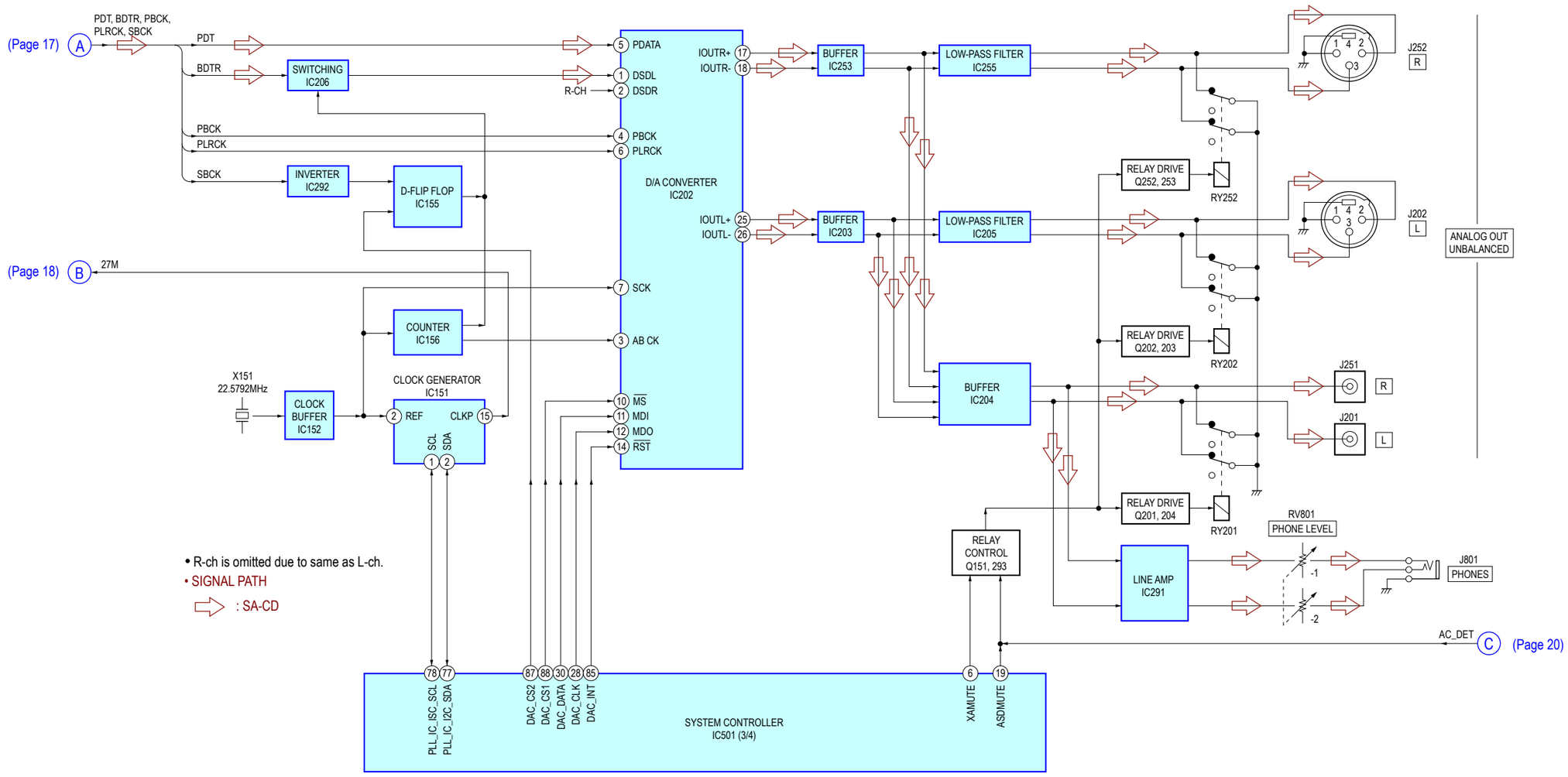

6-4. BLOCK DIAGRAM - PANEL, POWER SUPPLY Section -

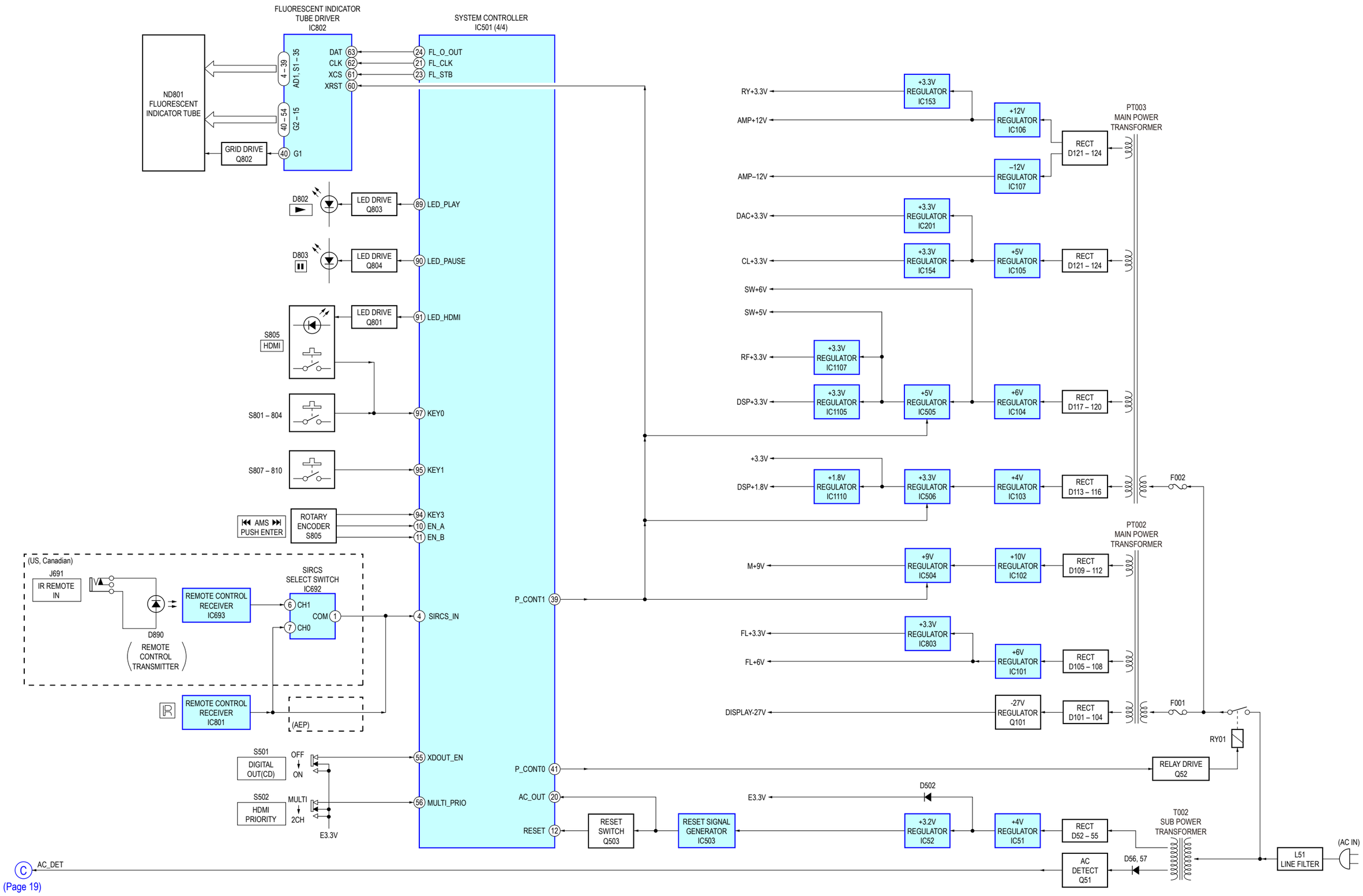

THIS NOTE IS COMMON FOR PRINTED WIRING BOARDS AND SCHEMATIC DIAGRAMS.
(In addition to this, the necessary note is printed in each block.)

For Printed Wiring Boards.

Note:

- ○——: Parts extracted from the component side.
- ——: parts extracted from the conductor side.
- △ : internal component.
- ▬: Pattern from the side which enables seeing. (The other layers' patterns are not indicated.)

Caution:	
Pattern face side: (Conductor Side)	Parts on the pattern face side seen from the pattern face are indicated.
Parts face side: (Component Side)	Parts on the parts face side seen from the parts face are indicated.

- AUDIO and MAIN boards are multi-layer printed board. However, the patterns of intermediate layers have not been included in diagrams.
- Indication of transistor.

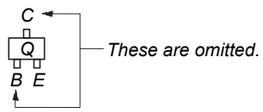

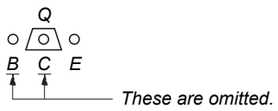

For Schematic Diagrams.

Note:

- All capacitors are in μF unless otherwise noted. (p: pF) 50 WV or less are not indicated except for electrolytics and tantalums.
- All resistors are in Ω and 1/4 W or less unless otherwise specified.
- △ : internal component.
- ▭: panel designation.

Note:	**Note:**
The components identified by mark ⚠ or dotted line with mark ⚠ are critical for safety. Replace only with part number specified.	Les composants identifiés par une marque ⚠ sont critiques pour la sécurité. Ne les remplacer que par une piéce portant le numéro spécifié.

- ▬▬: B+ Line.
- ▬ ▬ ▬: B– Line.
- Voltages and waveforms are dc with respect to ground under no-signal conditions.
  no mark: SA-CD PLAY
  ( ): CD PLAY
- Voltages are taken with VOM (Input impedance 10 MΩ). Voltage variations may be noted due to normal production tolerances.
- Waveforms are taken with a oscilloscope. Voltage variations may be noted due to normal production tolerances.
- Circled numbers refer to waveforms.
- Signal path.
  ⇨ : SA-CD PLAY
  ⇨ : CD PLAY (ANALOG)
  ⇨ : CD PLAY (DIGITAL)
- Abbreviation
  CND : Canadian model

- **Circuit Boards Location**

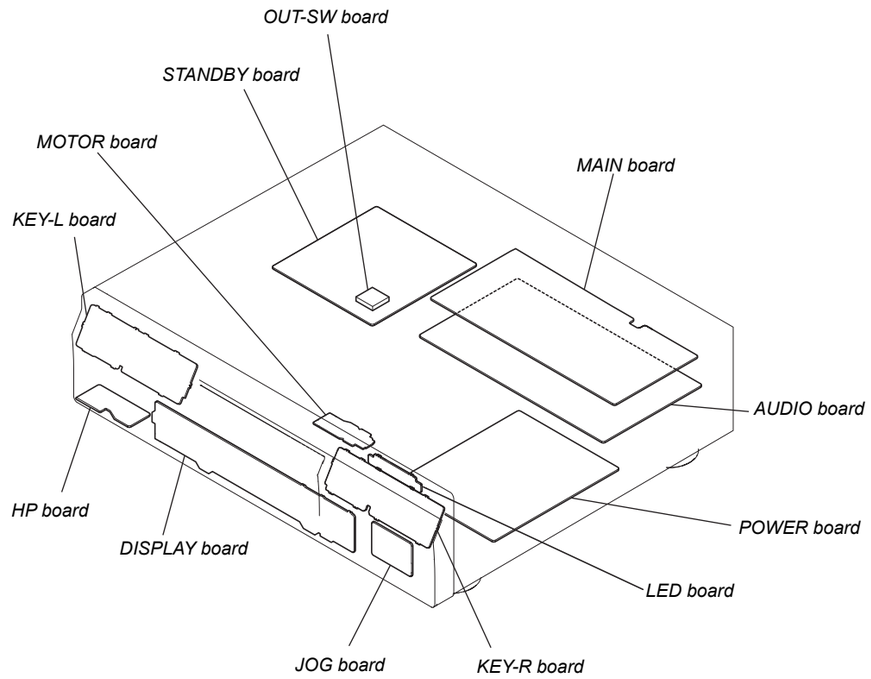

6-5. PRINTED WIRING BOARD - MAIN Section (1/2) -

• See page 21 for Circuit Boards Location. • : Uses unleaded solder.

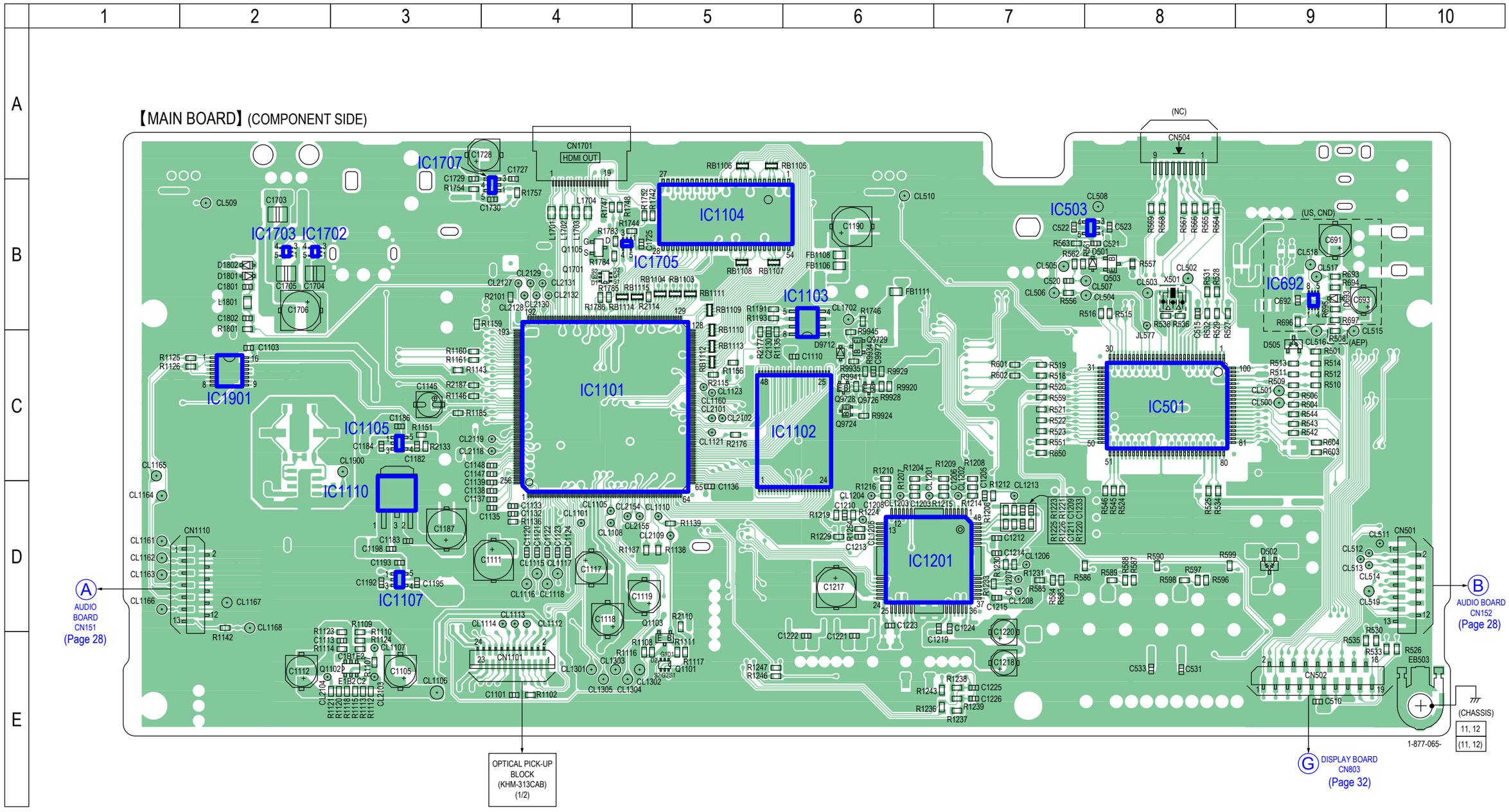

• **Semiconductor Location**

Ref. No.	Location	Ref. No.	Location	Ref. No.	Location	Ref. No.	Location
D501	B-8	IC503	B-8	IC1201	D-6	Q1102	E-3
D502	D-9	IC692	B-9	IC1702	B-2	Q1103	E-5
D505	C-9	IC1101	C-4	IC1703	B-2	Q1105	B-4
D693	B-9	IC1102	C-6	IC1705	B-4	Q1701	B-4
D1801	B-2	IC1103	B-6	IC1707	B-4	Q9724	C-6
D1802	B-2	IC1104	B-5	IC1901	C-2	Q9726	C-6
D9712	C-6	IC1105	C-3			Q9728	C-6
		IC1107	D-3	Q503	B-8	Q9729	C-6
IC501	C-8	IC1110	D-3	Q1101	E-5		

Note: IC1103 cannot exchange with single. When this part is damaged, exchange the entire mounted board.

6-6. PRINTED WIRING BOARDS - MAIN Section (2/2) -

• See page 21 for Circuit Boards Location. • : Uses unleaded solder.

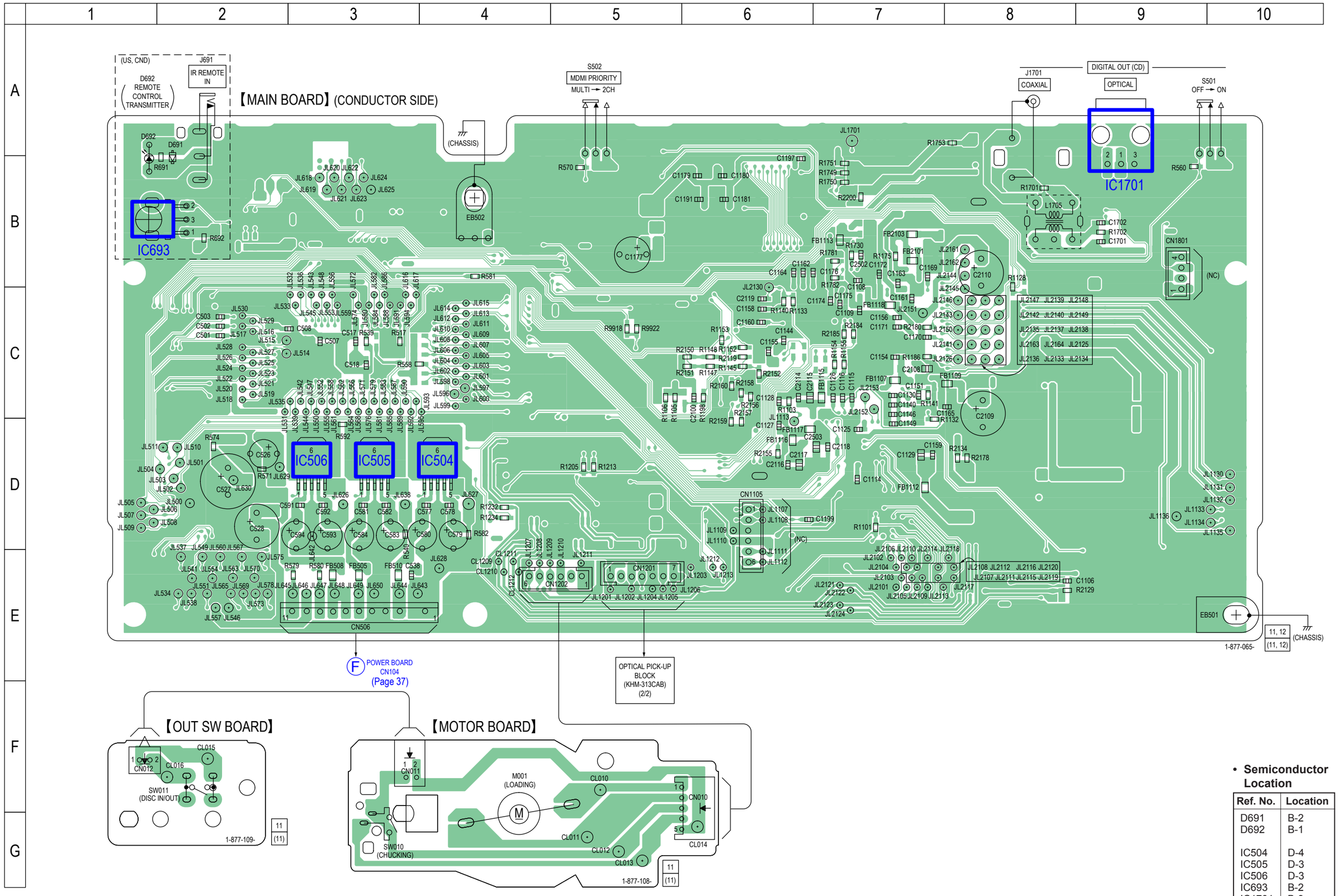

• **Semiconductor Location**

Ref. No.	Location
D691	B-2
D692	B-1
IC504	D-4
IC505	D-3
IC506	D-3
IC693	B-2
IC1701	B-9

6-7. SCHEMATIC DIAGRAM - MAIN Section (1/4) -

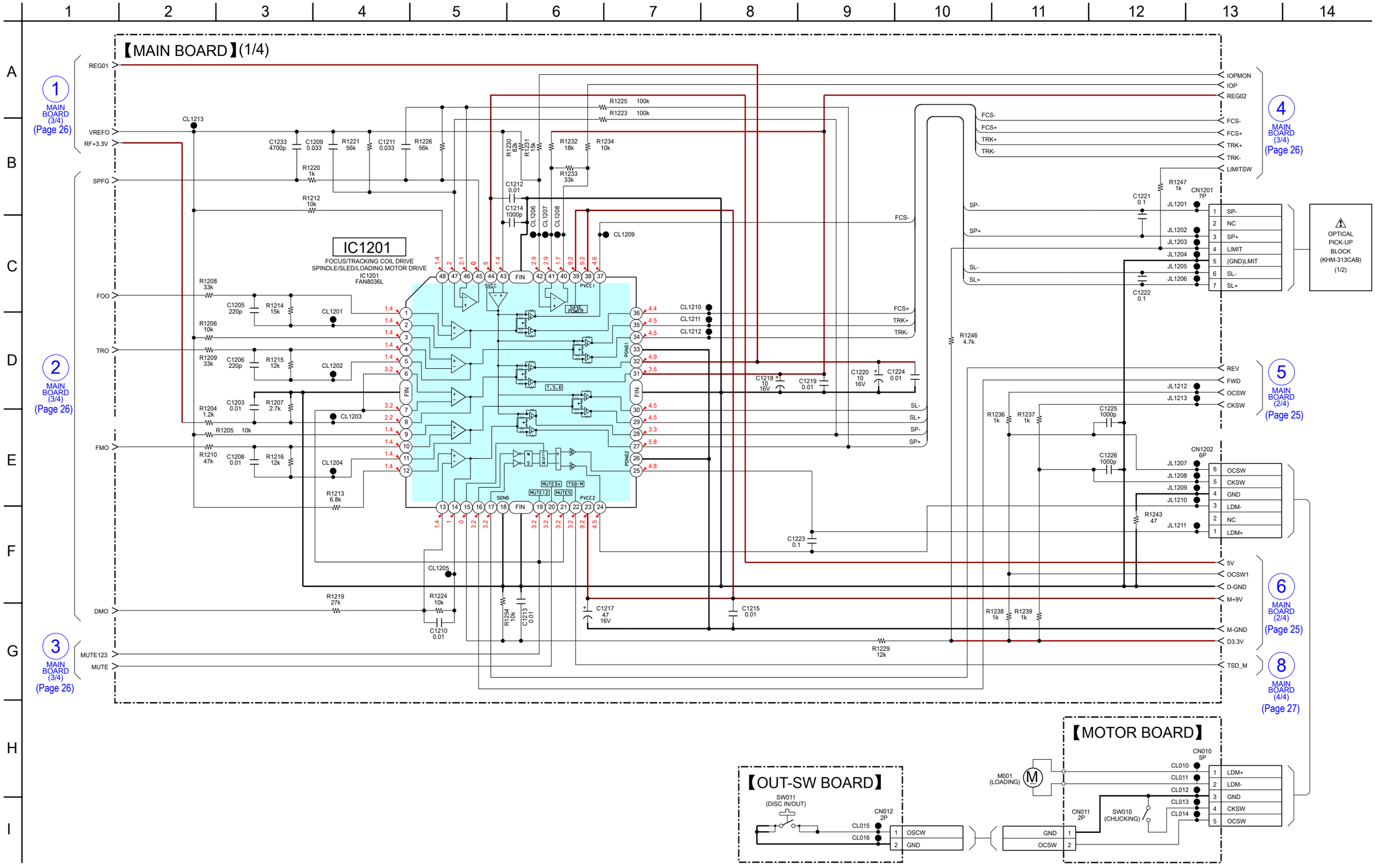

6-8. SCHEMATIC DIAGRAM - MAIN Section (2/4) -

• See page 38 for waveforms. • See page 38 for IC Block Diagrams. • See page 41 for IC Pin Function Description.

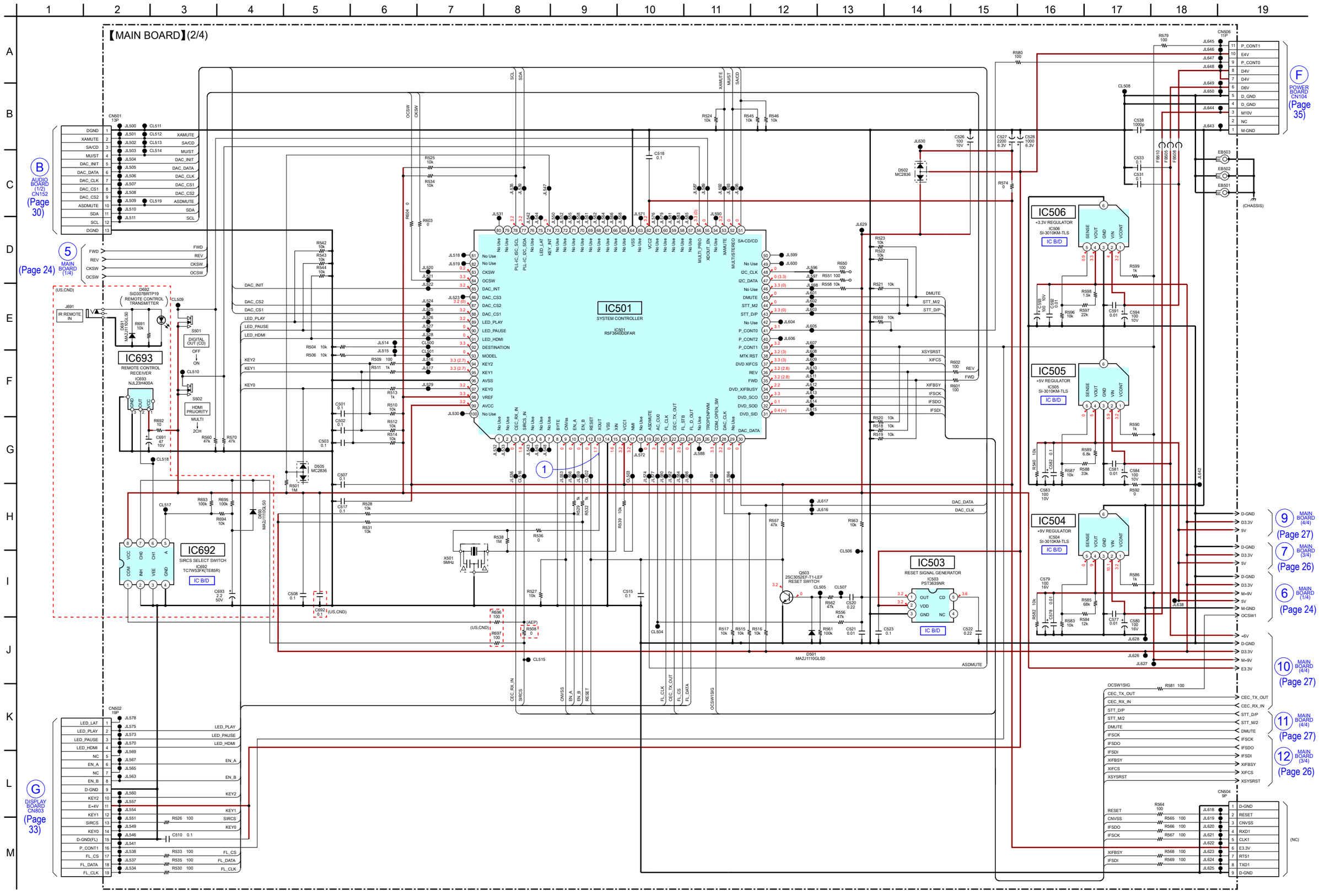

6-9. SCHEMATIC DIAGRAM - MAIN Section (3/4) -

• See page 38 for IC Block Diagrams. • See page 41 for IC Pin Function Description.

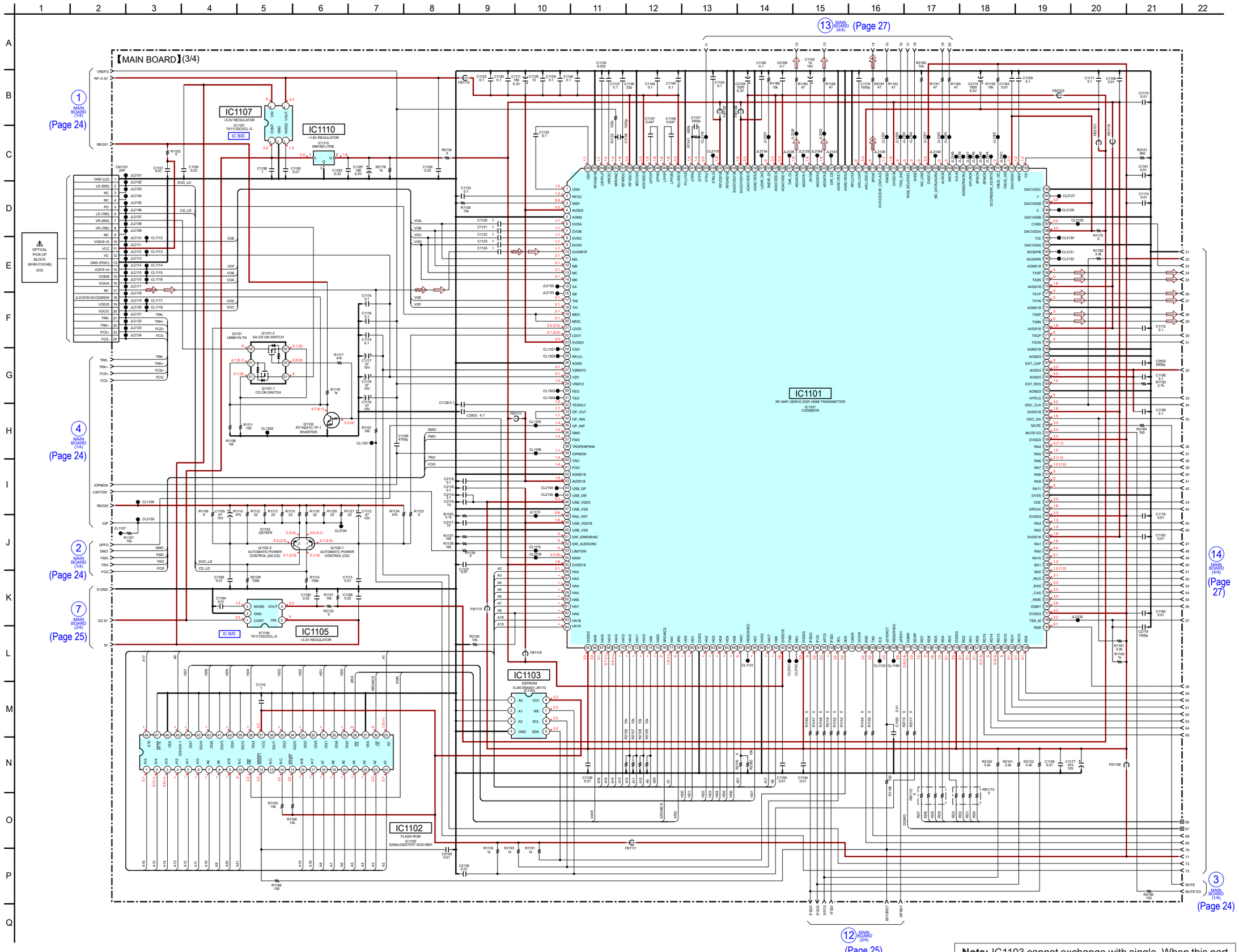

Note: IC1103 cannot exchange with single. When this part is damaged, exchange the entire mounted board.

6-10. SCHEMATIC DIAGRAM - MAIN Section (4/4) - • See page 38 for IC Block Diagrams.

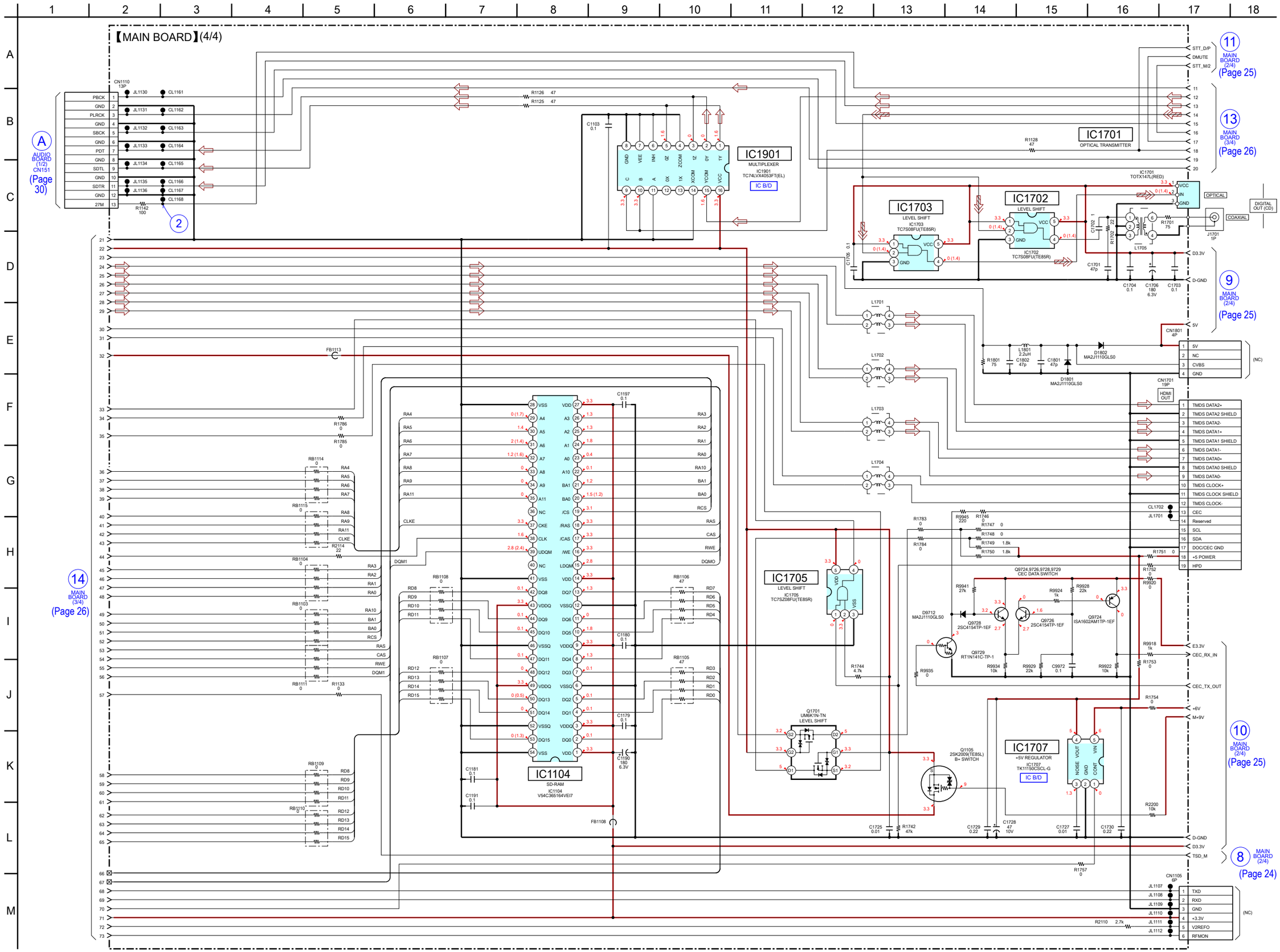

- **Semiconductor Location**

Ref. No.	Location
IC151	F-3
IC152	F-5
IC153	B-7
IC154	F-3
IC155	E-4
IC156	E-4
IC201	F-6
IC202	E-5
IC203	D-5
IC204	C-5
IC205	D-3
IC206	E-5
IC253	D-6
IC255	D-8
IC291	E-8
IC292	E-3
Q151	E-9
Q291	E-8
Q292	E-8

6-11. PRINTED WIRING BOARD - AUDIO Section (1/2) -

• See page 21 for Circuit Boards Location. • : Uses unleaded solder.

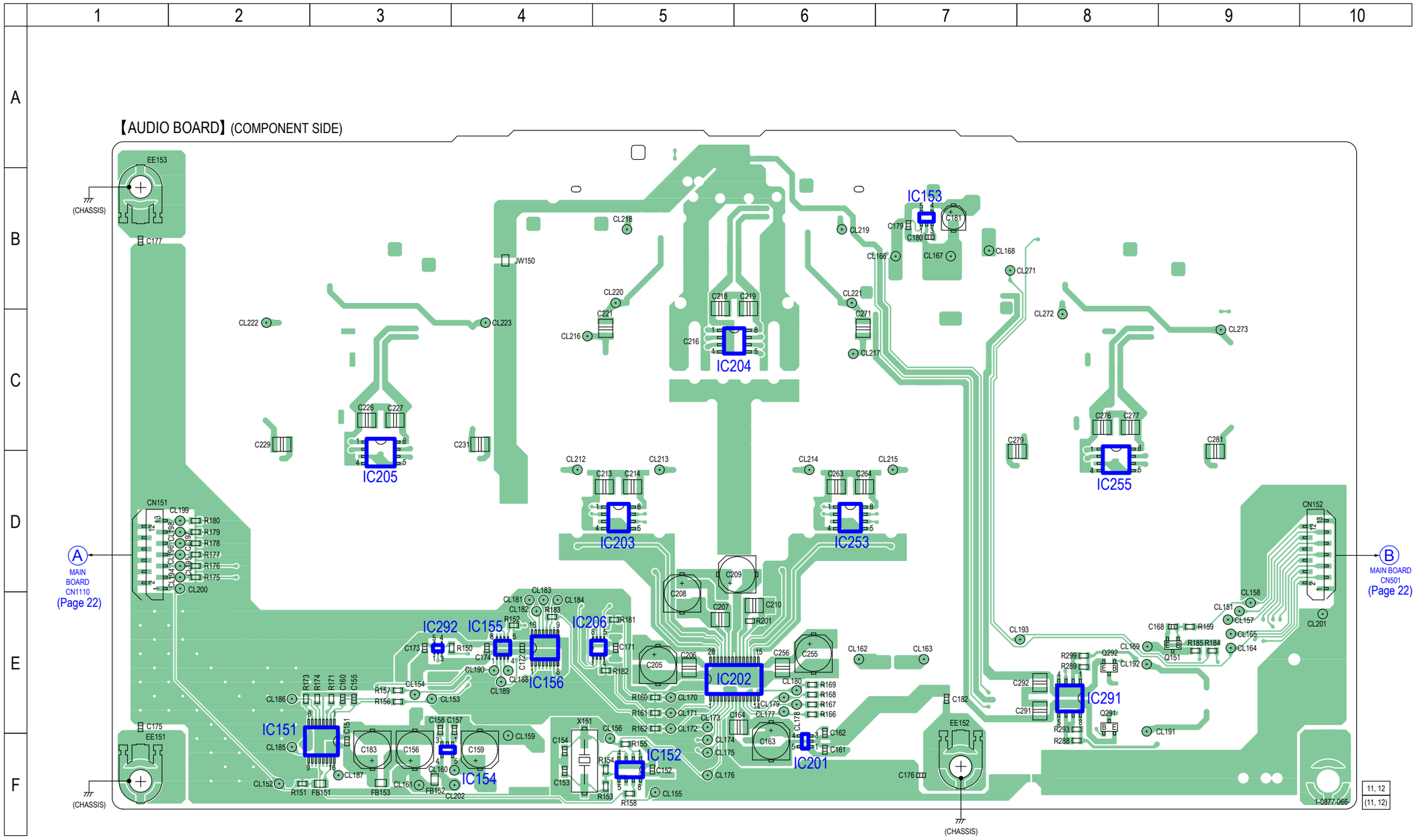

6-12. PRINTED WIRING BOARDS - AUDIO Section (2/2) -

• See page 21 for Circuit Boards Location. • : Uses unleaded solder.

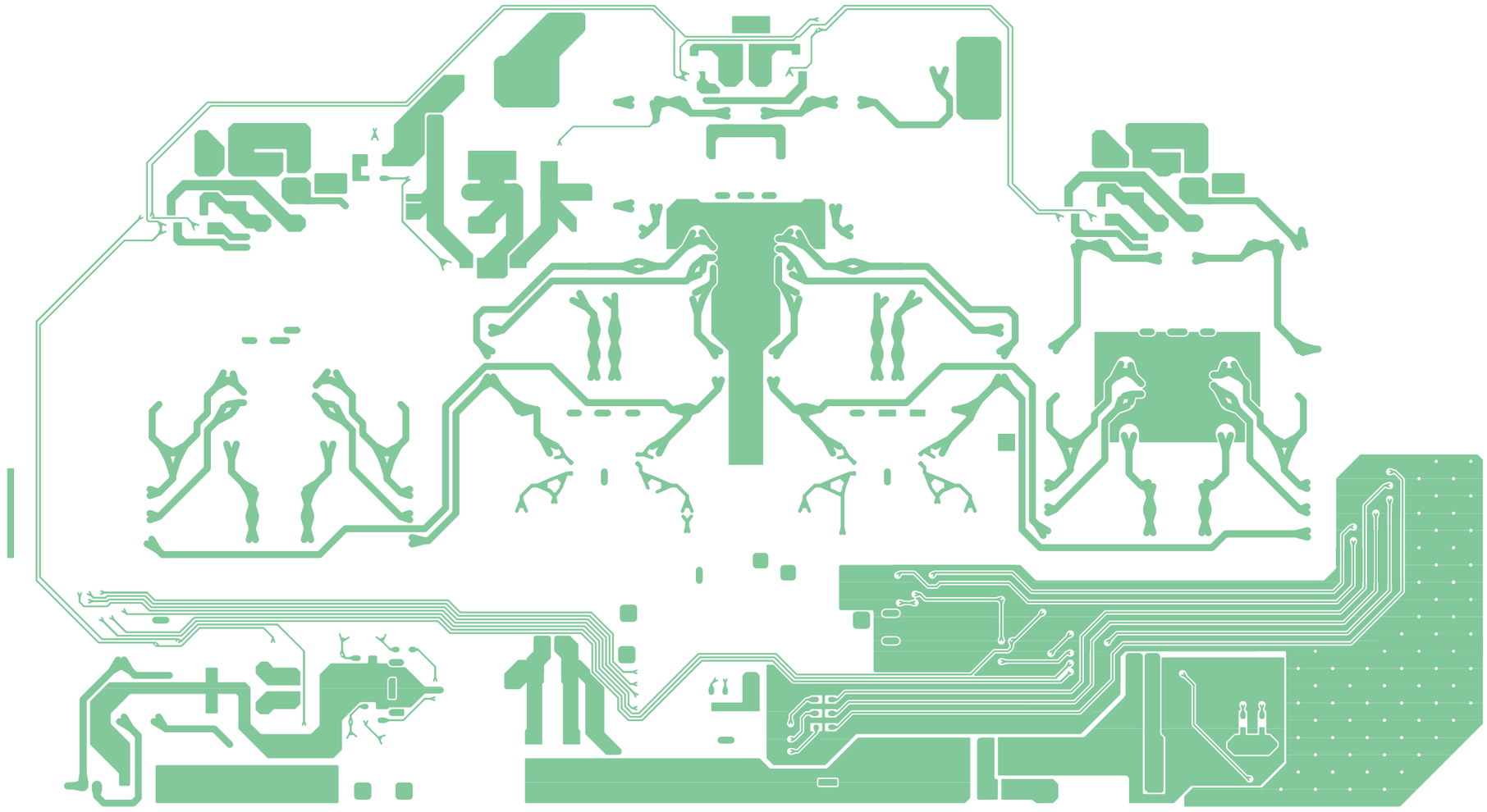

6-13. SCHEMATIC DIAGRAM - AUDIO Section (1/2) -

• See page 38 for waveforms. • See page 38 for IC Block Diagrams.

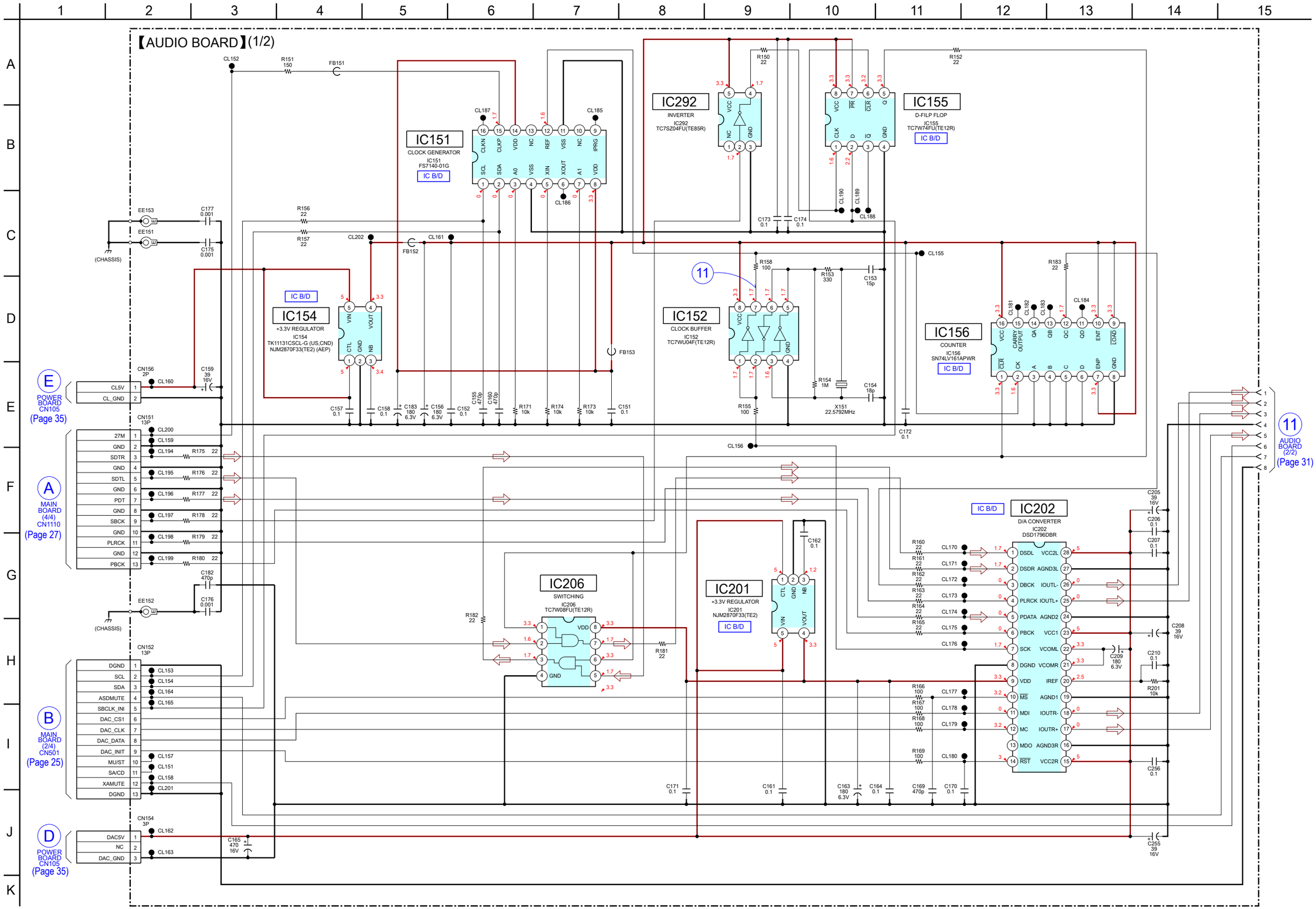

6-14. SCHEMATIC DIAGRAM - AUDIO Section (2/2) -

• See page 38 for IC Block Diagrams.

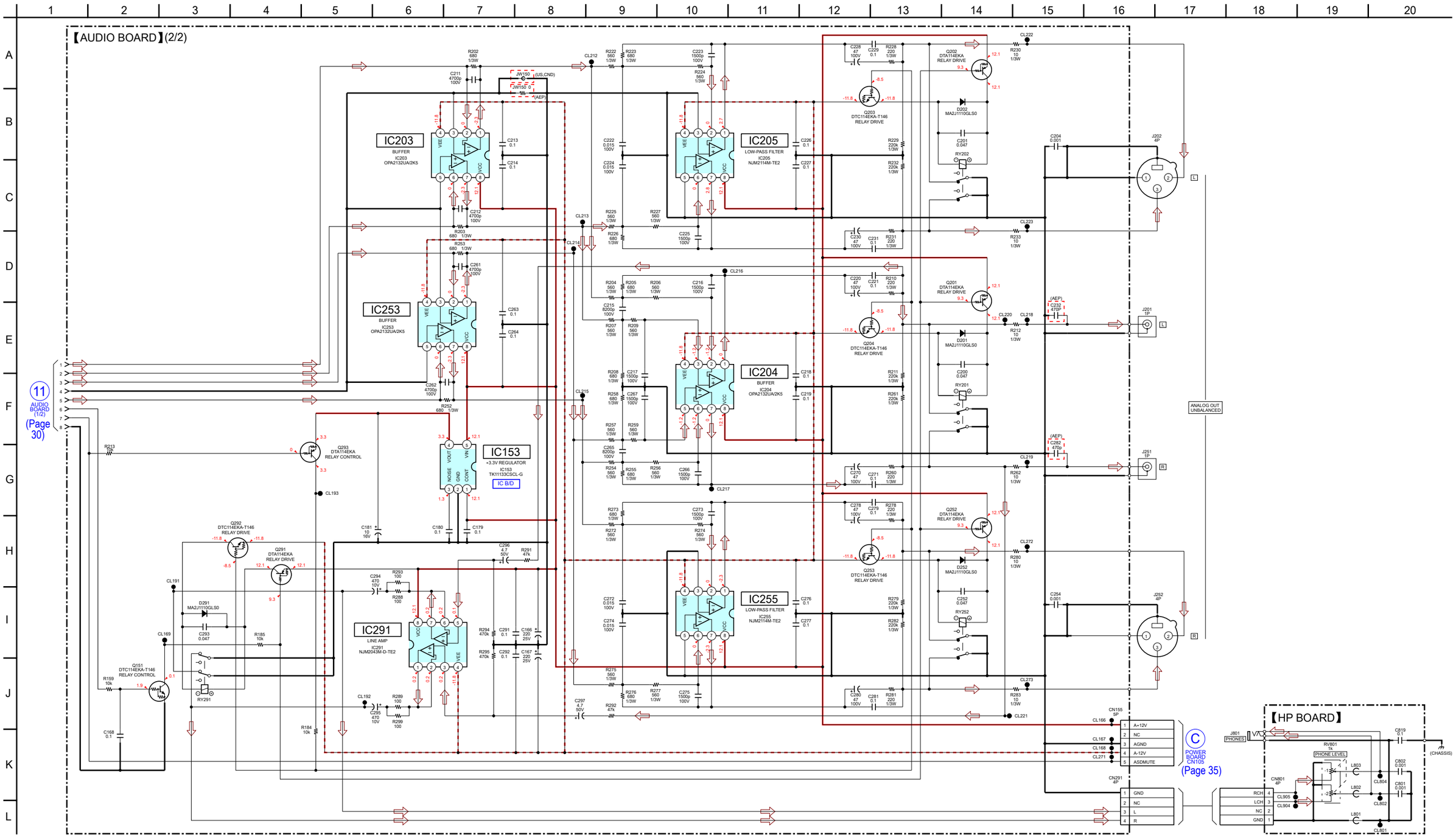

- **Semiconductor Location**

Ref. No.	Location
D801	A-10
D802	C-3
D803	C-4
IC801	B-10
IC802	A-5
IC803	B-3
Q801	E-10
Q802	B-4
Q803	D-4
Q804	D-4

6-15. PRINTED WIRING BOARDS - PANEL Section -

- **See page 21 for Circuit Boards Location.**
- **: Uses unleaded solder.**

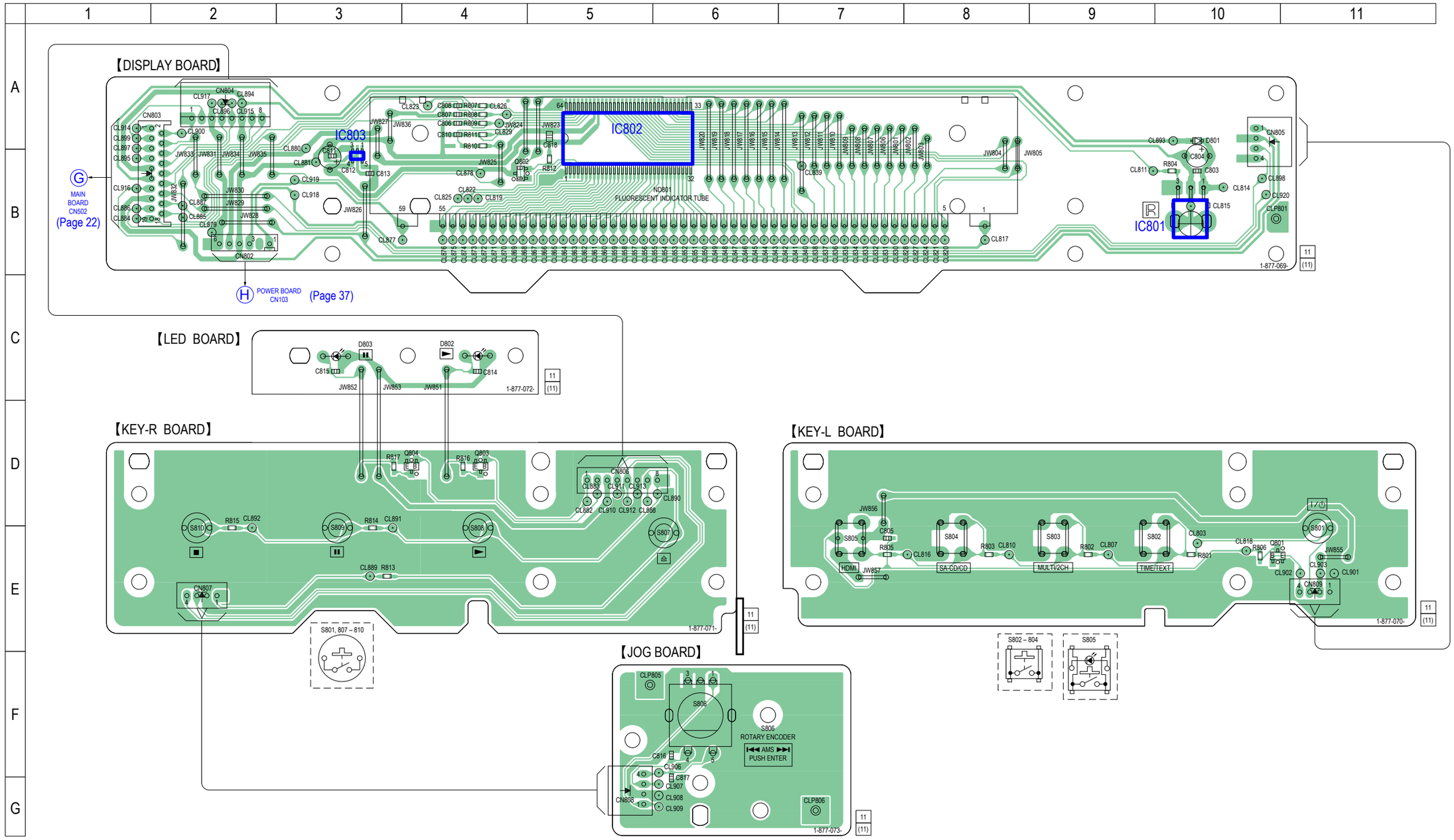

6-16. SCHEMATIC DIAGRAM - DISPLAY Board -

• See page 38 for waveforms. • See page 38 for IC Block Diagrams.

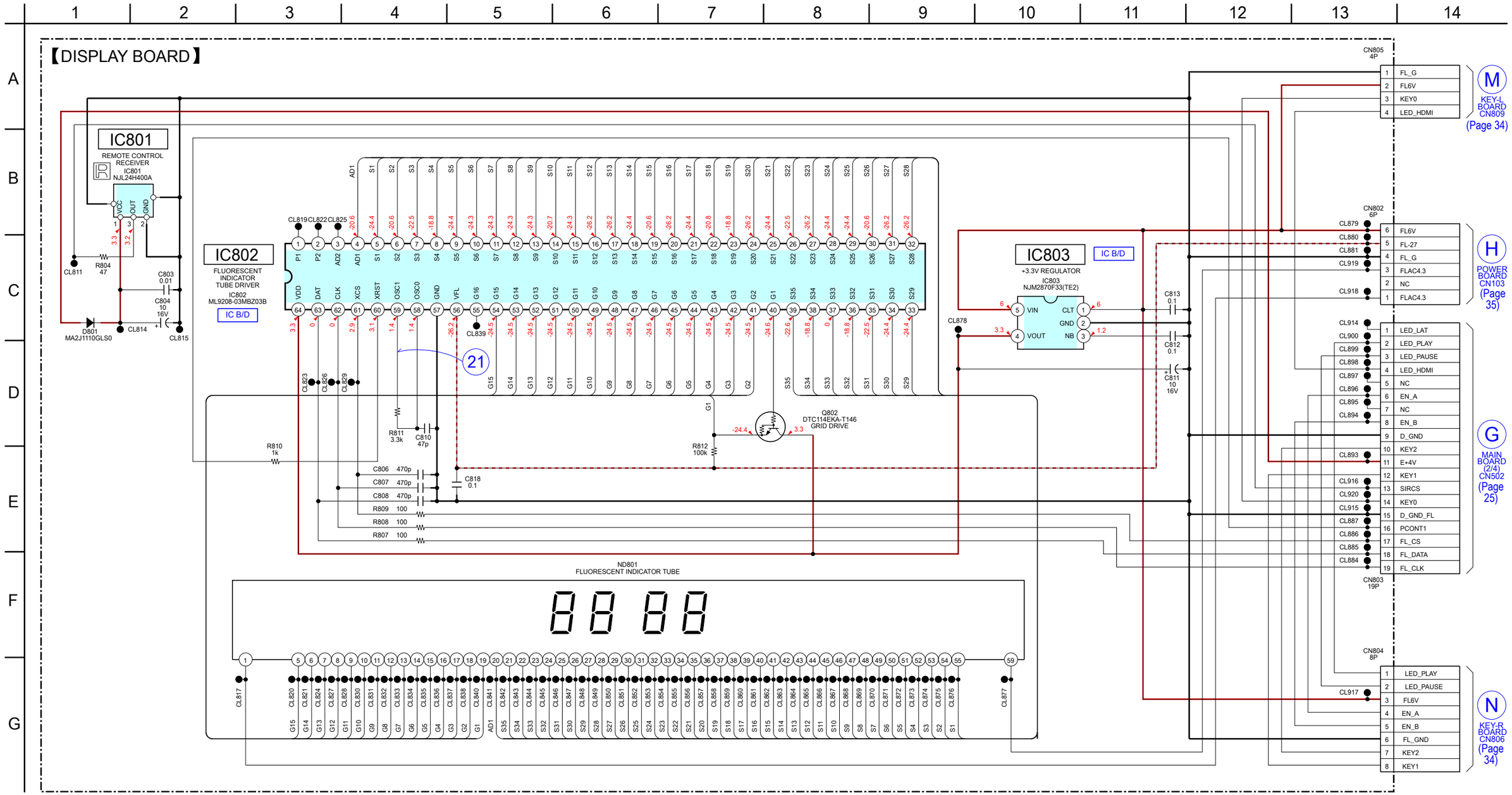

6-17. SCHEMATIC DIAGRAM - KEY Section -

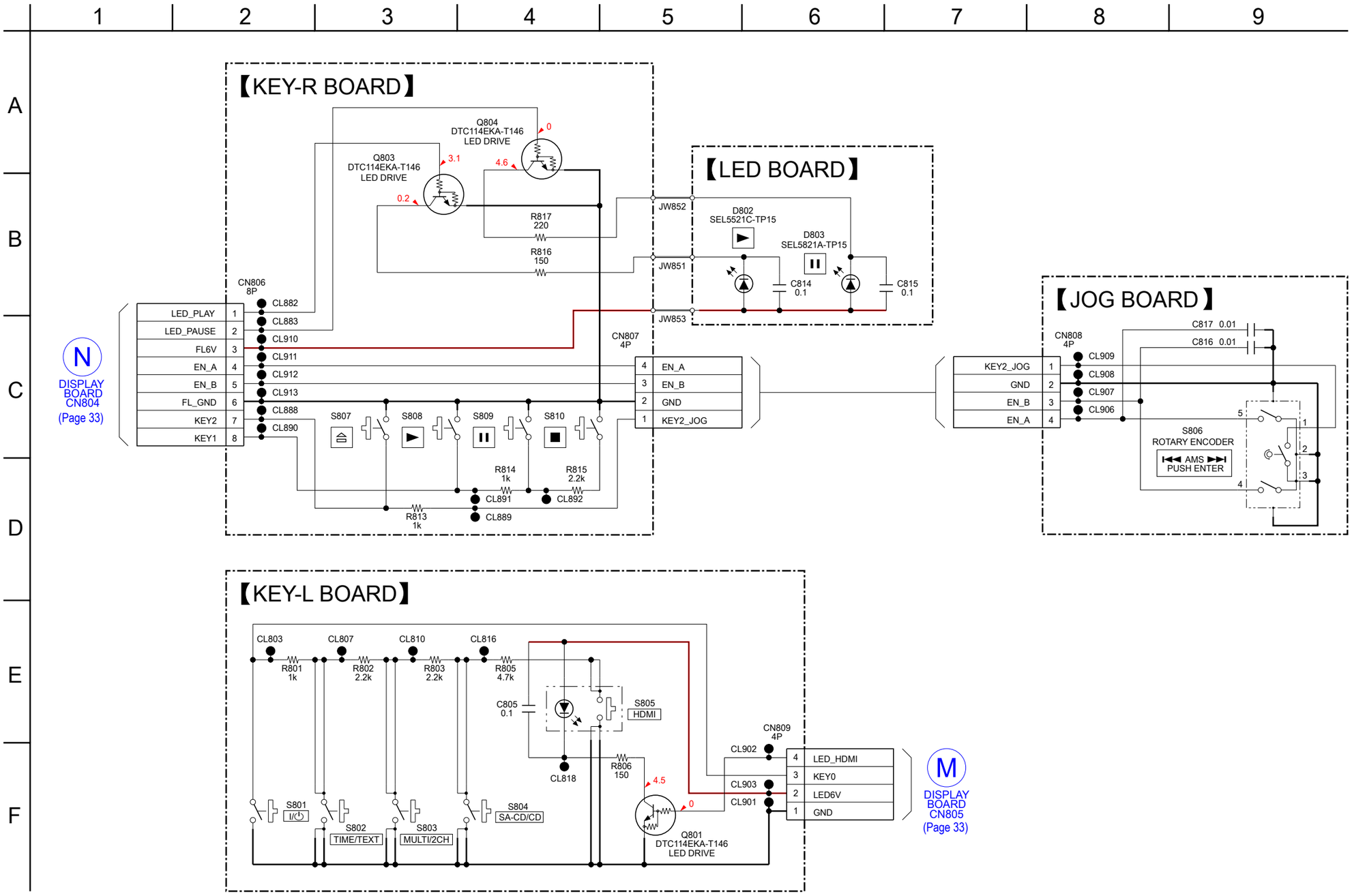

6-18. SCHEMATIC DIAGRAM - POWER Board -

• See page 38 for IC Block Diagrams.

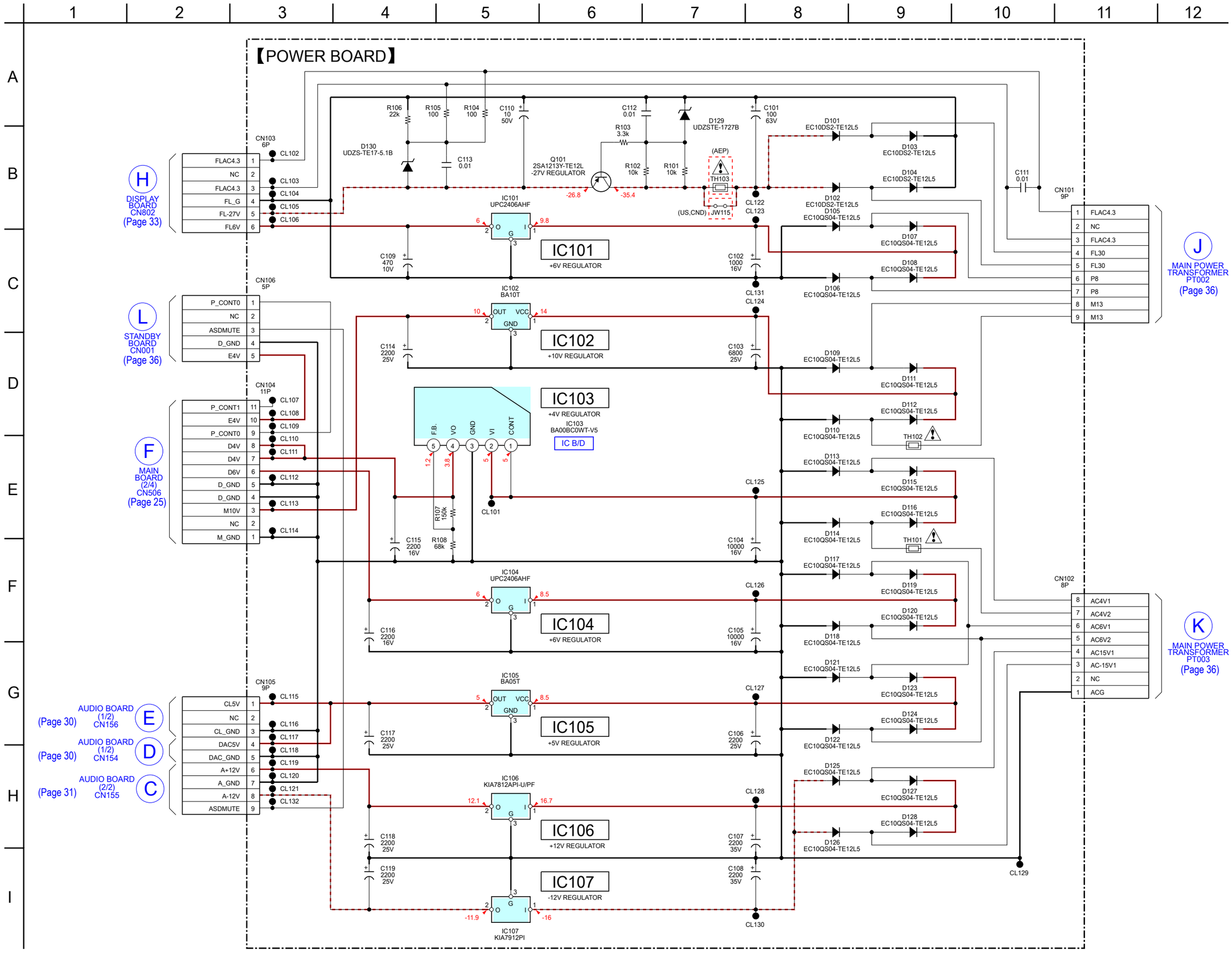

6-19. SCHEMATIC DIAGRAM - STANDBY Board - • See page 38 for IC Block Diagrams.

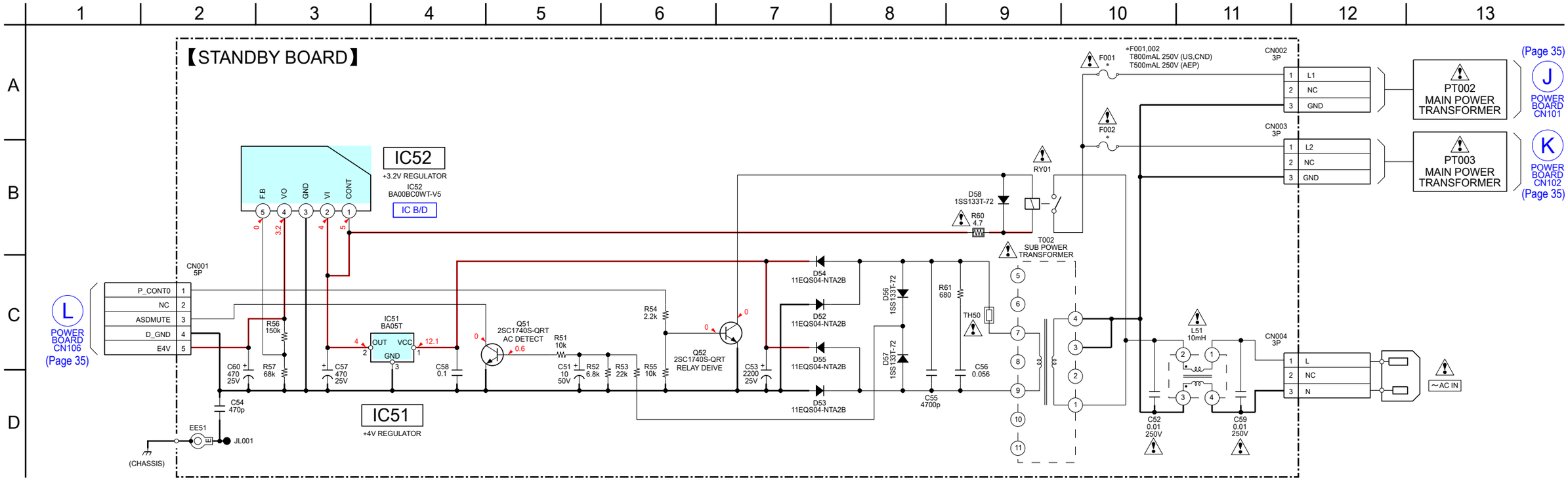

6-20. PRINTED WIRING BOARDS - POWER Section -

• See page 21 for Circuit Boards Location. • : Uses unleaded solder.

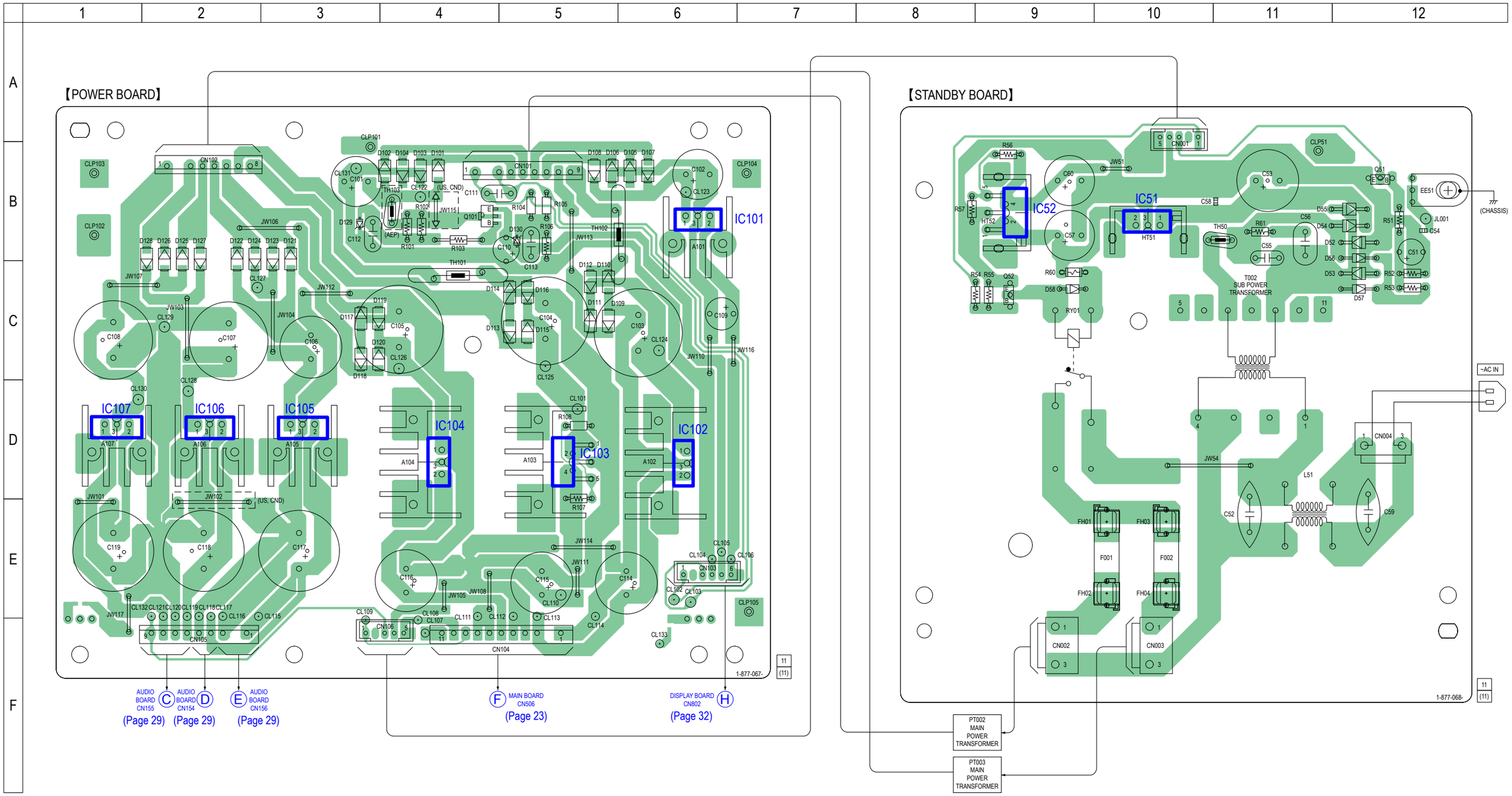

• **Semiconductor Location**

Ref. No.	Location	Ref. No.	Location	Ref. No.	Location	Ref. No.	Location	Ref. No.	Location
D52	B-12	D105	B-6	D116	C-5	D127	B-2	IC105	D-3
D53	C-12	D106	B-5	D117	C-3	D128	B-2	IC106	D-2
D54	B-12	D107	B-6	D118	C-3	D129	B-3	IC107	D-1
D55	B-12	D108	B-5	D119	C-3	D130	B-5		
D56	B-12	D109	C-5	D120	C-3			Q51	B-12
D57	C-12	D110	C-5	D121	B-3	IC51	B-10	Q52	C-9
D58	C-9	D111	C-5	D122	B-2	IC52	B-9	Q101	B-4
D101	B-4	D112	C-5	D123	B-3	IC101	B-6		
D102	B-4	D113	C-5	D124	B-2	IC102	D-6		
D103	B-4	D114	C-5	D125	B-2	IC103	D-5		
D104	B-4	D115	C-5	D126	B-2	IC104	D-4		

- **Waveforms**

– MAIN Board –

① IC501 ⑬ (XOUT)

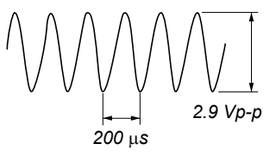

1 V/DIV, 200 µs/DIV

② CL1168 (27MHz)

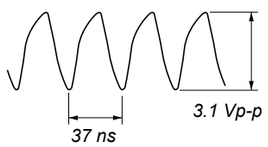

100 mV/DIV, 50 ns/DIV

– AUDIO Board –

⑪ IC152 ⑦

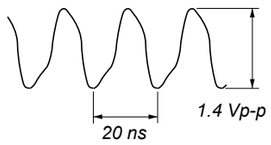

1 V/DIV, 20 ns/DIV

– DISPLAY Board –

㉑ IC802 ㊾ (OSC1)

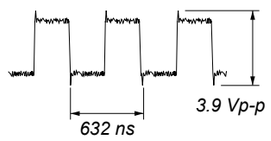

2 V/DIV, 200 ns/DIV

IC1901 TC74LVX4053FT (EL)

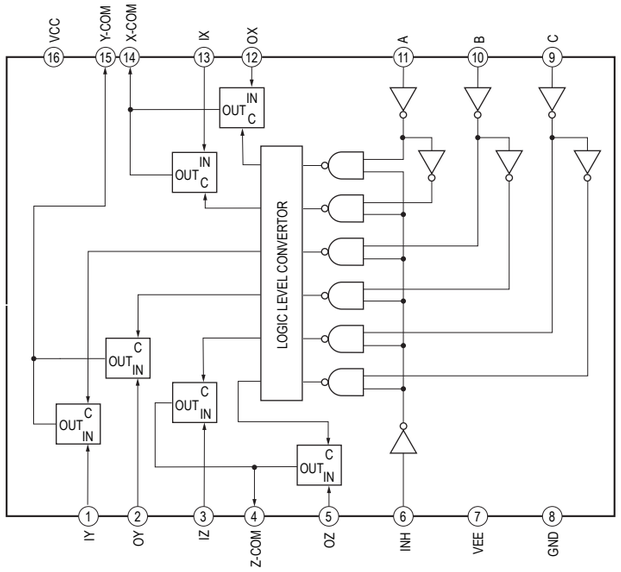

- **IC Block Diagrams**

– MAIN Board –

IC503 PST3635NR

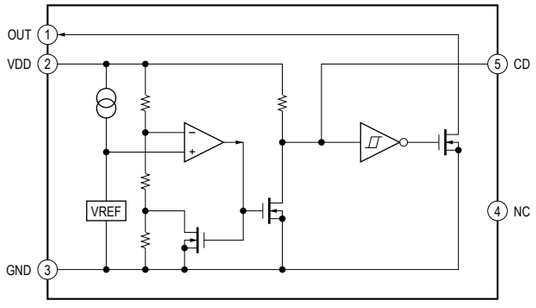

IC504 – 506 SI-3010KM-TLS

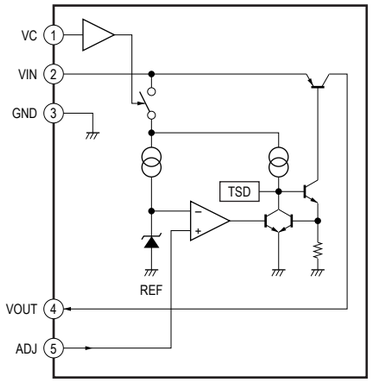

– AUDIO Board –

IC151 FS7140-01G

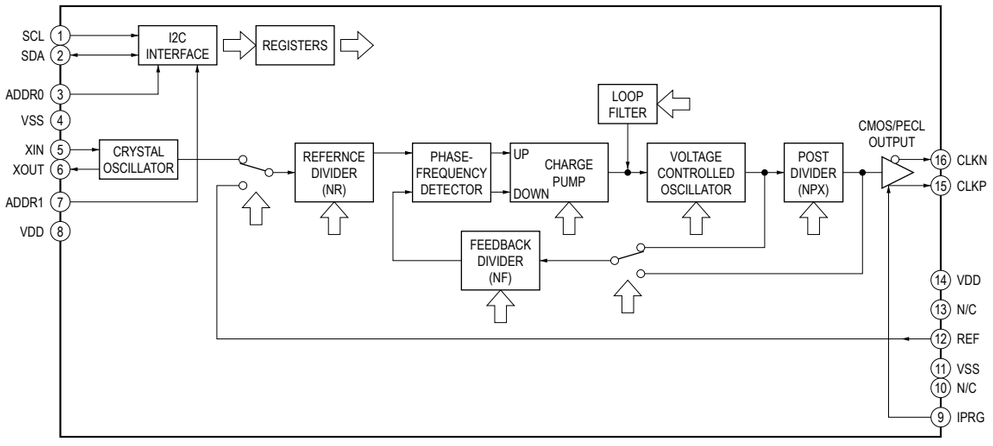

IC692 TC7W53FK (TE85R)

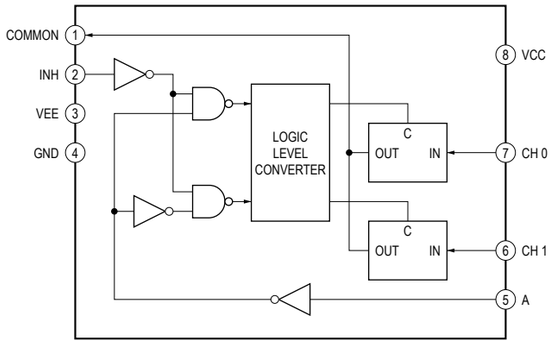

IC1105, 1107 TK11133CSCL-G
IC1707 TK11150CSCL-G

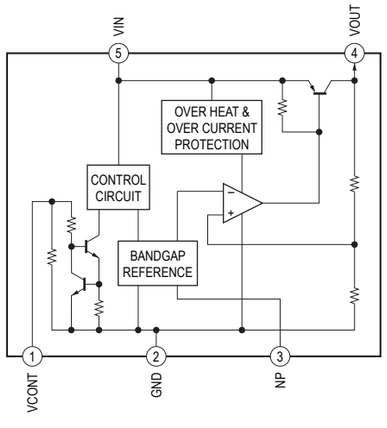

IC153 TK11133CSCL-G

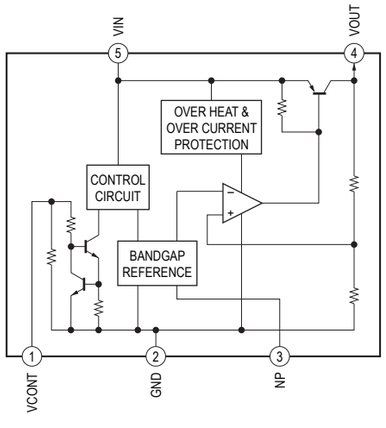

IC154 TK11131CSCL-G (US, Canadian models)
IC154 NJM2870F33 (TE2) (AEP model)
IC201 NJM2870F33 (TE2)

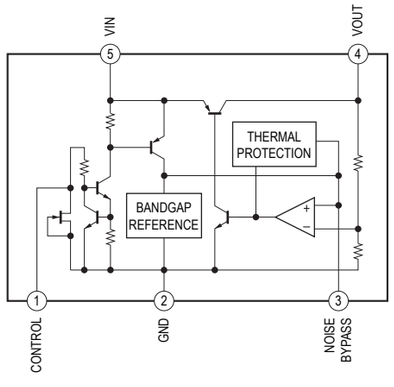

38

IC155 TC7W74FU

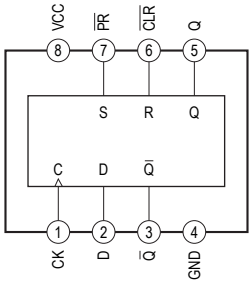

IC156 HD74LV161ATELL

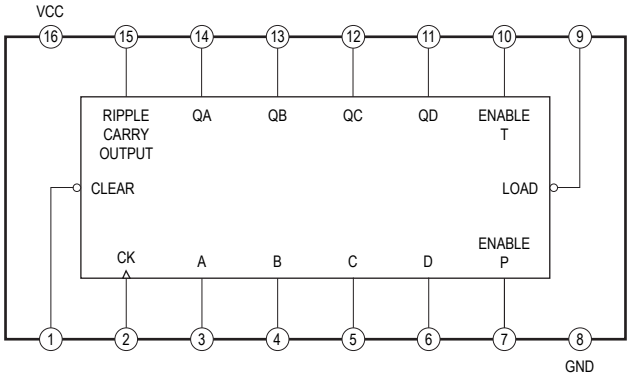

IC202 DSD1796DBR

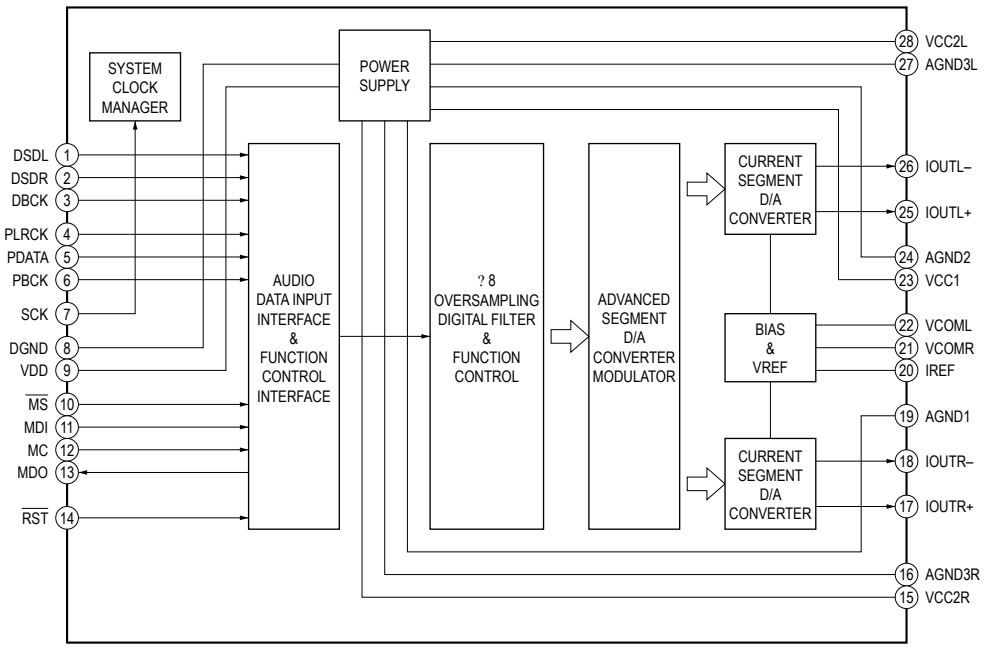

– DISPLAY Board –

IC802 ML9208-03MBZ03B

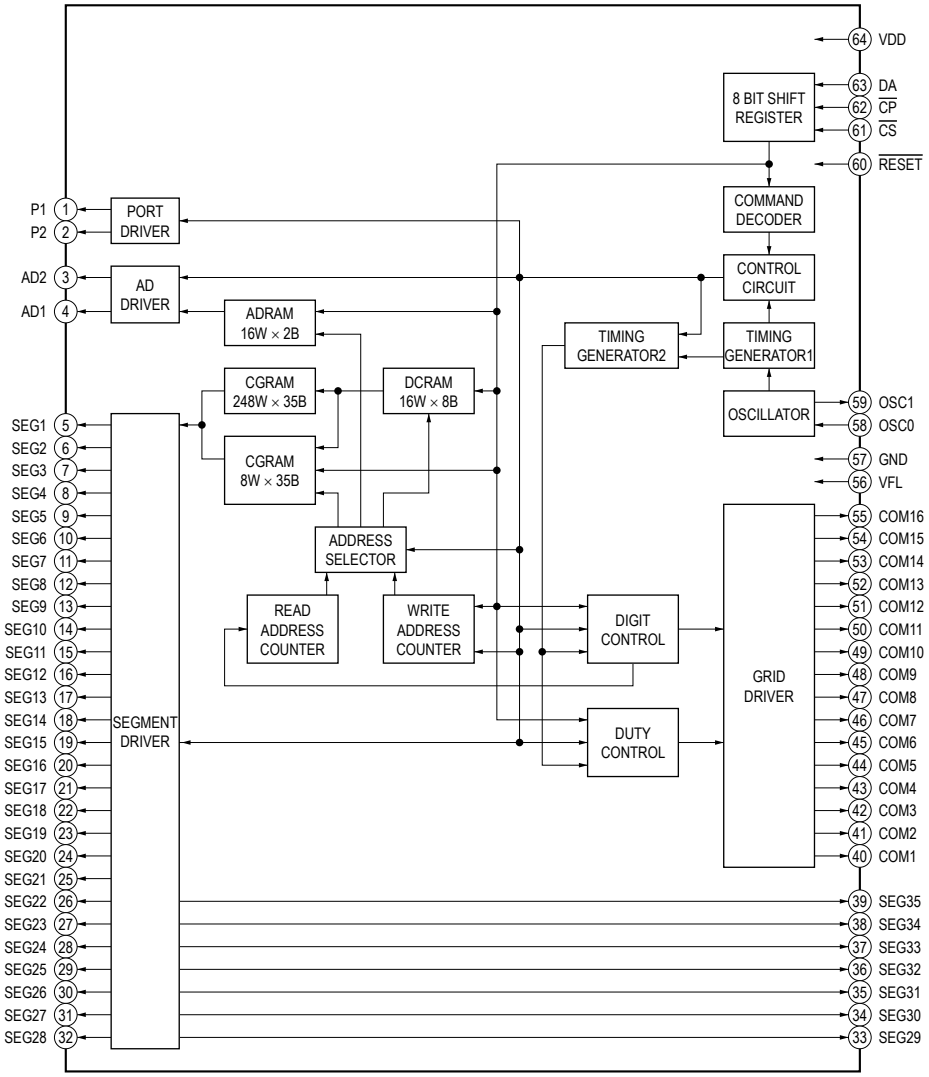

IC803 NJM2870F33 (TE2)

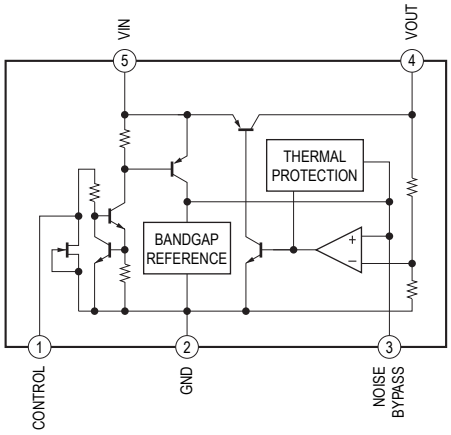

– POWER Board –

IC103 BA00BC0WT-V5

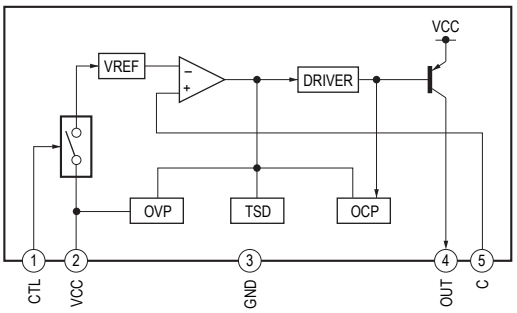

– STANDBY Board –

IC52 BA00BC0WT-V5

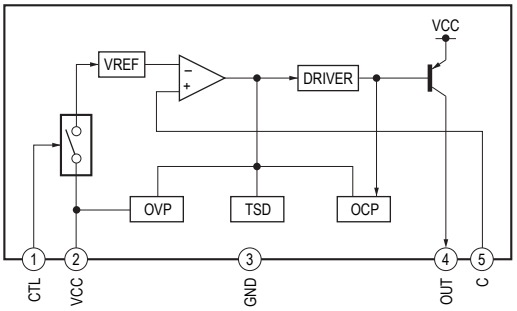

- **IC Pin Function Description**

MAIN BOARD IC501 R5F3640DDFAR (SYSTEM CONTROLLER)

Pin No.	Pin Name	I/O	Description
1, 2	No Use	O	Not used
3	CEC_RX_IN	I	CEC serial data input from the HDMI OUT connector
4	SIRCS_IN	I	SIRCS signal input from the remote control receiver
5 to 7	No Use	O	Not used
8	BYTE	I	External data bus width selection signal input terminal Fixed at "L" in this set
9	CNVSS	I	Processor mode switch input terminal
10	EN_A	I	Jog dial pulse input from the rotary encoder (A phase input)
11	EN_B	I	Jog dial pulse input from the rotary encoder (B phase input)
12	RESET	I	System reset signal input from the reset signal generator "L": reset For several hundreds msec. after the power supply rises, "L" is input, then it change to "H"
13	XOUT	O	Main system clock output terminal (5 MHz)
14	VSS	-	Ground terminal
15	XIN	I	Main system clock input terminal (5 MHz)
16	VCC1	-	Power supply terminal (+3.3V)
17	NMI	I	Non-maskable interrupt input terminal Fixed at "H" in this set
18	No Use	O	Not used
19	ASDMUTE	I	AC detection signal input terminal
20	AC_CUT	I	AC cut detection signal input terminal "L": AC cut on
21	FL_CLK	O	Serial data transfer clock signal output to the fluorescent indicator tube driver
22	CEC_TX_OUT	O	CEC serial data output to the HDMI OUT connector
23	FL_STB	O	Chip select signal output to the fluorescent indicator tube driver
24	FL_D_OUT	O	Serial data output to the fluorescent indicator tube driver
25	No Use	O	Not used
26	TROPENPWM	O	Tray speed PWM control signal output terminal Not used
27	CDM_OPEN_SW	I	Disc insert (8/12cm) detect switch input terminal "L": disc insert
28	DAC_CLK	O	Serial data transfer clock signal output to the D/A converter
29	No Use	I	Not used
30	DAC_DATA	O	Serial data output to the D/A converter
31	DVD_SID	O	Serial data output to the servo DSP
32	DVD_SOD	I	Serial data input from the servo DSP
33	DVD_SCO	I	Serial data transfer clock signal input from the servo DSP
34	DVD_XIFBUSY	O	Busy signal output to the servo DSP
35	FWD	O	Loading motor drive signal output terminal (forward direction)
36	REV	O	Loading motor drive signal output terminal (reverse direction)
37	DVD_XIFCS	I	Chip select signal input from the servo DSP
38	MTK RST	O	Reset signal output to the servo DSP and flash memory "L": reset
39	P_CONT1	O	Power on/off control signal output terminal "H": power on
40	P_CONT2	O	Power on/off control signal output terminal Not used
41	P_CONT0	O	Power on/off control signal output terminal "H": power on
42	No Use	O	Not used
43	STT_D/P	I	Normal/squeeze selection signal input from servo DSP
44	STT_M/2	I	Trigger detection switch input from the servo DSP
45	DMUTE	I	Audio muting signal input from the servo DSP
46	No Use	O	Not used
47	I2C_DATA	I/O	I2C Two-way data bus terminal Not used
48	I2C_CLK	I	I2C data transfer clock signal input terminal Not used
49, 50	No Use	O	Not used
51	Super Audio CD/CD	O	Not used
52	MULTI/STEREO	O	Not used
53	XAMUTE	O	Relay control signal output terminal
54	No Use	O	Not used
55	DOUT_EN	I	Digital out (CD) On/Off signal input terminal
56	MULTI_PRIO	I	HDMI priority selection signal input terminal
57 to 61	No Use	O	Not used
62	VCC2	-	Power supply terminal (+3.3V)
63	No Use	O	Not used
64	VSS	-	Ground terminal

Pin No.	Pin Name	I/O	Description
65 to 73	No Use	O	Not used
74	KEY_INT	I	Wake up signal input terminal
75	LED_LAT	O	Serial data latch pulse signal output terminal Not used
76	No Use	O	Not used
77	PLL_IC_I2C_SDA	I/O	I2C Two-way data bus with the clock generator
78	PLL_IC_I2C_SCL	I/O	I2C data transfer clock signal input/output with the clock generator
79 to 82	No Use	O	Not used
83	CKSW	I	Chucking detection switch input terminal
84	OCSW	I	Disc table open/close detection switch input terminal
85	DAC_INT	O	Reset signal output to the D/A converter "L": reset
86	DAC_CS3	O	Not used
87	DAC_CS2	O	Bit clock signal output to the d-flip flop
88	DAC_CS1	O	Chip select signal output to the D/A converter
89	LED_PLAY	O	Play LED drive signal output terminal "H": LED on
90	LED_PAUSE	O	Pause LED drive signal output terminal "H": LED on
91	LED_HDMI	O	HDMI on/off LED drive signal output terminal "H": LED on
92	DESTINATION	I	Setting terminal for the destination
93	MODEL	I	Setting terminal for the model
94, 95	KEY2, KEY1	I	Front panel key input terminal
96	AVSS	-	Ground terminal
97	KEY0	I	Front panel key input terminal
98	VREF	I	Reference voltage (+3.3V) input terminal
99	AVCC	-	Power supply terminal (+3.3V)
100	No Use	O	Not used

MAIN BOARD IC1101 CXD9927R (RF AMP, SERVO DSP, HDMI TRANSMITTER)

Pin No.	Pin Name	I/O	Description
1	OSC	O	RF offset cancellation capacitor connecting terminal
2	RFGC	O	RF AGC loop capacitor connecting Not used
3	IREF	I	Reference current input terminal
4	AVDD3	-	Power supply terminal (+3.3V)
5	AGND	-	Ground terminal
6	DVDA	I	AC coupled input path A
7	DVDB	I	AC coupled input path B
8	DVDC	I	AC coupled input path C
9	DVDD	I	AC coupled input path D
10	DVDRF IP	I	AC coupled super audio CD RF signal input from the optical pick-up block
11	MA	I	DC coupled main-beam RF signal input A
12	MB	I	DC coupled main-beam RF signal input B
13	MC	I	DC coupled main-beam RF signal input C
14	MD	I	DC coupled main-beam RF signal input D
15	SA	I	DC coupled sub-beam RF signal input A Not used
16	SB	I	DC coupled sub-beam RF signal input B Not used
17	TNI	I	3 beam satellite PD signal negative input from the optical pick-up block
18	TPI	I	3 beam satellite PD signal positive input from the optical pick-up block
19, 20	MDI1, MDI2	I	Laser power monitor input from the optical pick-up block
21	LDO2	O	Laser diode drive signal output to the optical pick-up block (for super audio CD)
22	LDO1	O	Laser diode drive signal output to the optical pick-up block (for CD)
23	SVDD3	-	Power supply terminal (+3.3V)
24	CSO	O	Central servo signal output terminal Not used
25	RFLVL	O	RFRP low pass output terminal Not used
26	SGND	-	Ground terminal
27	V2REFO	-	Reference voltage (+2.8V) output terminal
28	V2O	-	Reference voltage (+2V) output to the optical pick-up block
29	VREFO	O	Reference voltage (+1.4V) output terminal
30	FEO	O	Focus error monitor output terminal Not used
31	TEO	O	Tracking error monitor output terminal Not used
32	TEZISLV	O	O Slice level of tracking error signal output terminal Not used
33	OP_OUT	O	Output to the internal operational amplifier Not used
34	OP_INN	I	Negative input from the internal operational amplifier Not used
35	OP_INP	I	Positive input from the motor driver
36	DMO	O	Spindle motor control signal output to the motor driver
37	FMO	O	Sled motor control signal output to the motor driver
38	TROPENPWM	O	Loading motor control signal output terminal
39	IOPMON	I	Power monitor terminal
40	TRO	O	Tracking coil control signal output to the coil driver
41	FOO	O	Focus coil control signal output to the coil driver
42	AGND18	-	Ground terminal
43	AVDD18	-	Power supply terminal (+1.8V)
44	USB_DP	I/O	Two-way data (positive) bus terminal Not used
45	USB_DM	I/O	Two-way data (negative) bus terminal Not used
46	USB_VDD3	-	Power supply terminal (+3.3V)
47	USB_VSS	-	Ground terminal
48	PAD_VRT	-	Not used
49	USB_VDD18	-	Power supply terminal (+1.8V)
50	USB_VSS	-	Ground terminal
51	DIR_ERROR	O	PLL lock error signal and data error flag output termnal Not used
52	DIR_AUDIO	O	PCM audio data output termnal Not used
53	LIMITSW	I	Limit detection switch input terminal
54	MSW	O	CD/super audio CD selection signal output terminal "L": CD, "H": super audio CD
55	DVDD18	-	Power supply terminal (+1.8V)
56 to 64	HA2 to HA8, HA18, HA19	O	Address signal output to the flash ROM
65	DVDD3	-	Power supply terminal (+3.3V)
66	XWR	O	Write enable signal output to the flash ROM
67 to 75	HA16 to HA9, HA20	O	Address signal output to the flash ROM

Pin No.	Pin Name	I/O	Description
76	XROMCS	O	Chip select signal output to the flash ROM
77	HA1	O	Address signal output to the flash ROM
78	XRD	O	Read enable signal output to the flash ROM
79, 80	HD0, HD1	I/O	Two-way data bus terminal with the flash ROM
81	DVSS	-	Ground terminal
82 to 86	HD2 to HD6	I/O	Two-way data bus terminal with the flash ROM
87	HA21	O	Address signal output to the flash ROM
88	RESERVED	-	Not used
89	HD7	I/O	Two-way data bus terminal with the flash ROM
90	DVSS	-	Ground terminal
91, 92	HA17, HA0	O	Address signal output to the flash ROM
93	DVDD18	-	Power supply terminal (+1.8V)
94	FWD	O	Loading motor drive signal output terminal Not used
95	REV	O	Loading motor drive signal output terminal Not used
96	DVDD3	-	Power supply terminal (+3.3V)
97	IFSDO	O	Serial data output to the system controller
98	IFCK	O	Serial data transfer clock signal output to the system controller
99	xIFCS	O	Chip select signal output to the system controller
100	IFSDI	I	Serial data input from the system controller
101	SCL	I	Serial data transfer clock signal output to the EEPROM
102	SDA	I/O	Two-way data bus with the EEPROM
103	CKSW	I	Chucking detection switch input terminal Not used
104	OCSW	I	Disc table open/close detection switch input terminal Not used
105	RXD	I	Receive data input terminal Not used
106	TXD	O	Transmit data output terminal Not used
107	ICE	I	ICE mode enable signal input terminal Not used
108	xSYSRST	I	Reset signal input from the system controller "L": reset
109	RESERVED	-	Not used
110	xIFBSY	I	Busy signal input from the system controller
111	DQM0	O	Data mask signal output to the SD-RAM
112	EEWP	O	Write protect signal output to the EEPROM
113 to 117	RD7 to RD3	I/O	Two-way data bus with the SD-RAM
118	DVDD3	-	Power supply terminal (+3.3V)
119 to 129	RD2 to RD0, RD15 to RD8	I/O	Two-way data bus with the SD-RAM
130	TSD_M	O	Thermal shut down signal output to the motor/coil driver
131	DVDD3	-	Power supply terminal (+3.3V)
132	DQM1	O	Data mask signal output to the SD-RAM
133	_RWE	O	Write enable signal output to the SD-RAM
134	_CAS	O	Column address strobe signal output to the SD-RAM
135	_RAS	O	Row address strobe signal output to the SD-RAM
136	_RCS	O	Chip select signal output to the SD-RAM
137, 138	BA0, BA1	O	Bank address signal output to the SD-RAM
139 to 141	RA10, RA0, RA1	O	Address signal output to the SD-RAM
142	DVDD18	-	Power supply terminal (+1.8V)
143, 144	RA2, RA3	O	Address signal output to the SD-RAM
145	DVDD3	-	Power supply terminal (+3.3V)
146	DRCLK	O	Serial data transfer clock signal output to the SD-RAM
147	CKE	O	Clock enable signal output to the SD-RAM
148	DVSS	-	Ground terminal
149 to 155	RA11, RA9 to RA4	O	Address signal output to the SD-RAM
156	DVDD3	-	Power supply terminal (+3.3V)
157	MUTE123	O	Muting signal output to the motor/coil driver
158	MUTE	O	Muting signal output to the motor/coil driver
159	DDC_DA	O	Serial data transfer clock signal output terminal
160	DVDD18	-	Power supply terminal (+1.8V)
161	DDC_CLK	I/O	Two-way data bus with terminal
162	HTPLG	I	HDMI hot-plug detection signal input terminal
163	AGND3	-	Ground terminal
164	EXT_RES	-	Not used

Pin No.	Pin Name	I/O	Description
165, 166	AVDD3	-	Power supply terminal (+3.3V)
167	EXT_CAP	-	Not used
168, 169	AGND3, AGND18	-	Ground terminal
170	TXCN	O	TMDS clock signal (negative) output to the HDMI OUT connector
171	TXCP	O	TMDS clock signal (positive) output to the HDMI OUT connector
172	AVDD18	-	Power supply terminal (+1.8V)
173	TX0N	O	TMDS data (negative) output to the HDMI OUT connector
174	TX0P	O	TMDS data (positive) output to the HDMI OUT connector
175	AGND18	-	Ground terminal
176	TX1N	O	TMDS data (negative) output to the HDMI OUT connector
177	TX1P	O	TMDS data (positive) output to the HDMI OUT connector
178	AVDD18	-	Power supply terminal (+1.8V)
179	TX2N	O	TMDS data (negative) output to the HDMI OUT connector
180	TX2P	O	TMDS data (positive) output to the HDMI OUT connector
181	AGND18	-	Ground terminal
182, 183	R/Cr/Pr, B/Cb/Pb	O	Component video signal output terminal Not used
184	DACVSSA	-	Ground terminal
185	Y/G	O	Component video signal output terminal Not used
186	DACVDDA	-	Power supply terminal (+3.3V)
187	CVBS	O	Video signal output terminal Not used
188	DACVSSB	-	Ground terminal
189	C	O	Chroma signal output terminal Not used
190	DACVDDB	-	Power supply terminal (+3.3V)
191	Y	O	Y signal output terminal Not used
192	DACVSSC	-	Ground terminal
193	FS	-	Full scale adjustment terminal
194	VREF	-	For reference voltage terminal
195	DACVDDC	-	Power supply terminal (+3.3V)
196	VBUS_OE	O	VBUS control signal output terminal Not used
197	VBUS_OC	I	VBUS control signal input terminal
198	SCORE/DIR_XSTATE	I	Source clock switching monitor input terminal Not used
199	SPMCK	O	Master clock signal output terminal Not used
200	SPBCK	O	Bit clock signal output terminal Not used
201	SPLRCK	O	L/R sampling clock signal output terminal Not used
202	ADIN(SPDATA)	I	Audio serial data input terminal Not used
203	ACLK	O	Master clock signal output terminal Not used
204	ABCK	O	Bit clock signal output to the D/A converter
205	ALRCK	O	L/R sampling clock signal output to the D/A converter
206	MC_DATA(ADIN)	I	Audio serial data input terminal Not used
207	DVDD3	-	Power supply terminal (+3.3V)
208	NO_USE	-	Not used
209	WIDE	O	Normal/squeeze selection signal output terminal
210	REG_SEL/DSEL	O	Audio muting signal output to the system controller
211	TRG_SW	I	Trigger detection switch input terminal Not used
212	DVDD18	-	Power supply terminal (+1.8V)
213	KMOD	O	Karaoke mode status signal output terminal
214	XVOICE/DIR_CSFCAG	I	Detection of MIC signal input terminal Not used
215	SPDIF	O	SPDIF digital audio signal output to the D/A converter
216	APLLVDD3	-	Power supply terminal (+3.3V)
217	APLLCAP	-	Connection terminal for an external capacitor
218 to 220	APLLVSS, ADACVSS2, ADACVSS1	-	Ground terminal
221	DIR_CE	-	Not used
222	ASDATA3	O	Audio serial data output to the D/A converter
223	ASDATA2	O	Audio serial data output terminal Not used
224	AVCM	-	Not used
225	ASDATA1	O	Audio serial data output terminal Not used
226	ASDATA0	O	Audio serial data output terminal
227	DIR_CL	-	Not used

Pin No.	Pin Name	I/O	Description
228, 229	ADACVDD1, ADACVDD2	-	Power supply terminal (+3.3V)
230	Rt/DIR_DI	I	Serial data input terminal Not used
231	Lt/DIR_DO	O	Serial data output terminal Not used
232	ADACVSS1	-	Ground terminal
233	ADACVDD1	-	Power supply terminal (+3.3V)
234	SADCVDD18	-	Power supply terminal (+1.8V)
235	SADCVSS18	-	Ground terminal
236	RFGND18	-	Ground terminal
237	RFVDD18	-	Power supply terminal (+1.8V)
238	XTALO	O	System clock output terminal Not used
239	XTALI	I	System clock input terminal
240	JITFO	O	Output terminal of the RF jitter meter
241	JITFN	I	Input terminal of the RF jitter meter
242	PLLVSS	-	Ground terminal
243	PLLVDD3	-	Power supply terminal (+3.3V)
244	LPFON	O	Data PLL loop filter output terminal
245	LPFIP	I	Data PLL loop filter input terminal
246	LPFIN	I	Data PLL loop filter input terminal
247	LPFOP	O	Data PLL loop filter output terminal
248	ADCVDD3	-	Power supply terminal (+3.3V)
249	ADCVSS	-	Ground terminal
250	RFVDD3	-	Power supply terminal (+3.3V)
251	RFRPDC	O	RF ripple detect output terminal
252	RFRPAC	I	RF ripple detect input terminal
253	HRFZC	I	High frequency RF ripple zero crossing terminal
254	CRTPLP	O	Defect level fi lter capacitor connecting terminal
255	RFGND18	-	Ground terminal
256	OSP	O	RF offset cancellation capacitor connecting terminal

SECTION 7
EXPLODED VIEWS

Note:
- -XX and -X mean standardized parts, so they may have some difference from the original one.
- Items marked "*" are not stocked since they are seldom required for routine service. Some delay should be anticipated when ordering these items.
- The mechanical parts with no reference number in the exploded views are not supplied.
- Color Indication of Appearance Parts Example:
  KNOB, BALANCE (WHITE) . . . (RED)
  ↑ Parts Color ↑ Cabinet's Color
- Abbreviation
  CND : Canadian model

The components identified by mark ⚠ or dotted line with mark ⚠ are critical for safety.
Replace only with part number specified.

Les composants identifiés par une marque ⚠ sont critiques pour la sécurité.
Ne les remplacer que par une pièce portant le numéro spécifié.

The components identified by mark 🔒 contain confidential information.
Strictly follow the instructions whenever the components are repaired and/or replaced.

Les composants identifiés par la marque 🔒 contiennent des informations confidentielles.
Suivre scrupuleusement les instructions chaque fois qu'un composant est remplacé et / ou réparé.

7-1. CASE SECTION

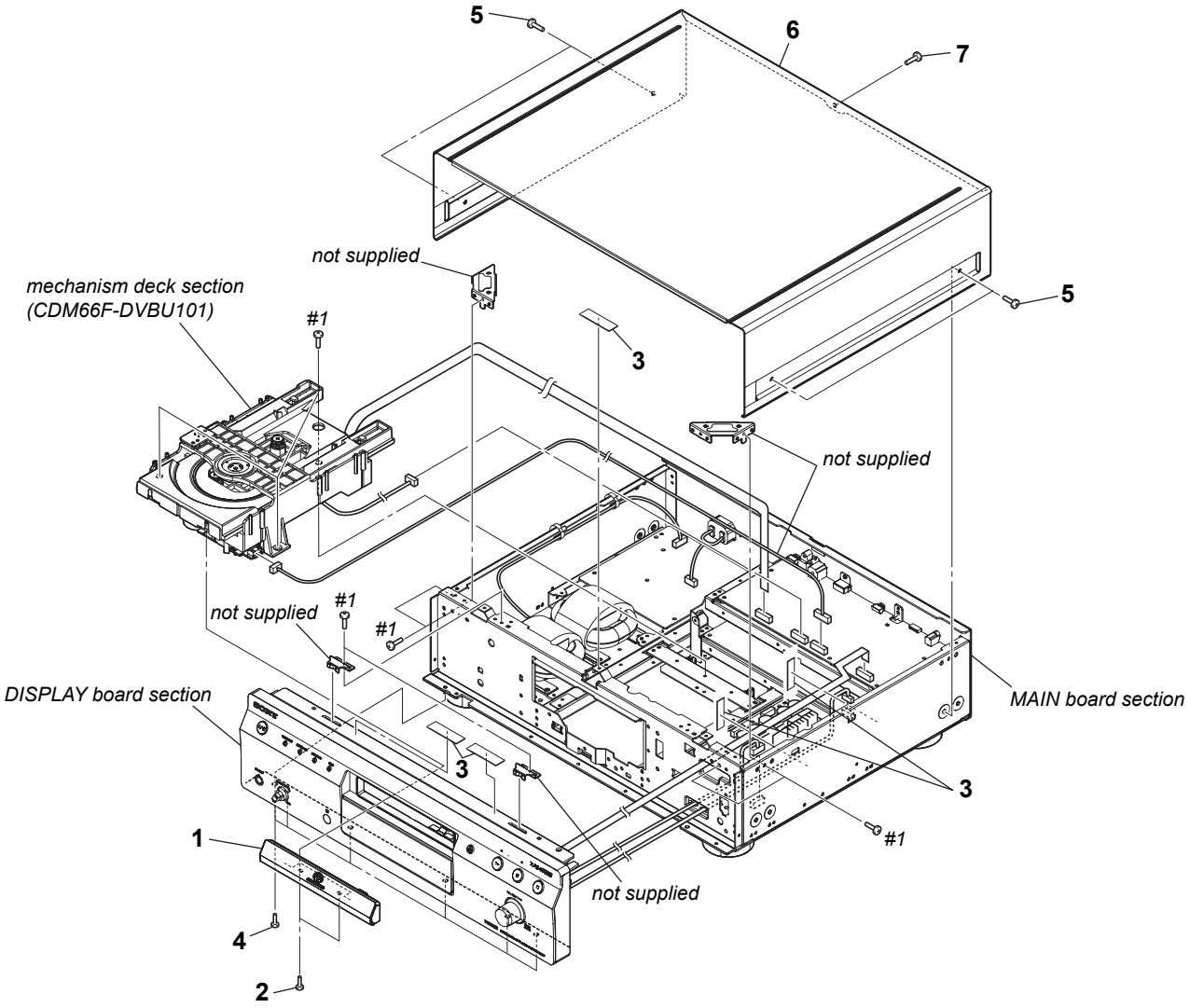

Ref. No.	Part No.	Description	Remark
1	A-1544-225-A	PANEL ASSY, LOADING	
2	3-087-053-01	+BVTP2.6 (3CR)	
3	4-860-518-00	CUSHION	
4	3-704-515-11	SCREW (BV/RING)	
5	2-580-630-01	SCREW, +BVST 4X8	
6	4-220-301-32	CASE	
7	4-227-843-03	SCREW (TP), FLAT HEAD	
#1	7-685-646-79	SCREW +BVTP 3X8 TYPE2 IT-3	

7-2. DISPLAY BOARD SECTION

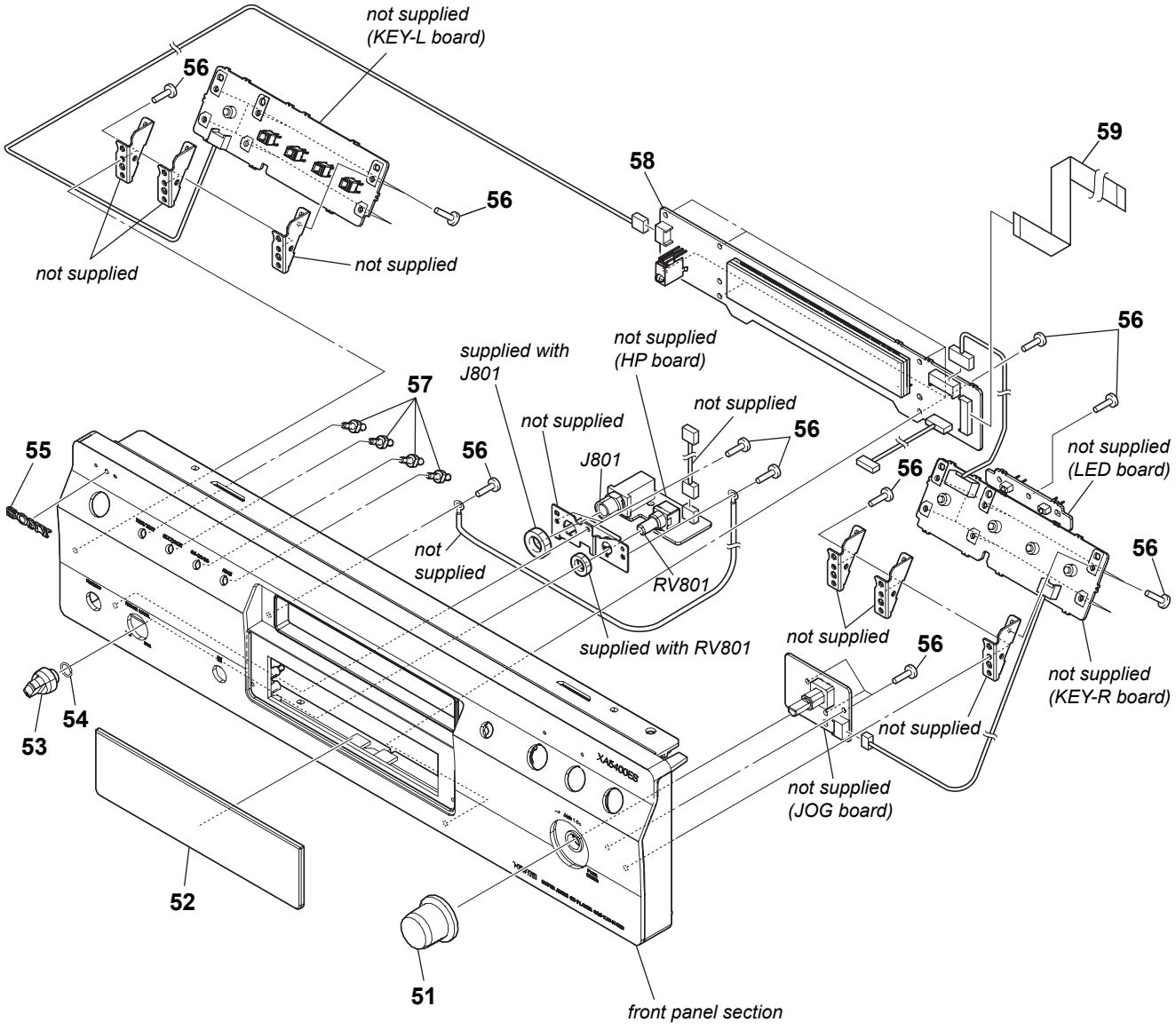

Note: If wire (flat type) is replaced, install it after bending it in the same form as that before replacement.

Ref. No.	Part No.	Description	Remark
51	X-4955-656-2	KNOB (SEL) ASSY	
52	3-873-313-01	PLATE, INDICATION	
53	4-250-532-01	KNOB (HP-VOL)	
54	2-893-374-01	SPRING, RING	
55	4-942-568-41	EMBLEM (NO.5), SONY	
56	3-087-053-01	+BVTP2.6 (3CR)	
57	4-220-711-01	INDICATOR (FILTER)	
58	A-1544-255-A	DISPLAY BOARD, COMPLETE	
59	1-835-567-51	WIRE (FLAT TYPE) (19 CORE)	
J801	1-770-904-11	JACK (LARGE TYPE) (PHONES)	
RV801	1-227-185-11	RES, VAR, CARBON (PHONE LEVEL)	

7-3. FRONT PANEL SECTION

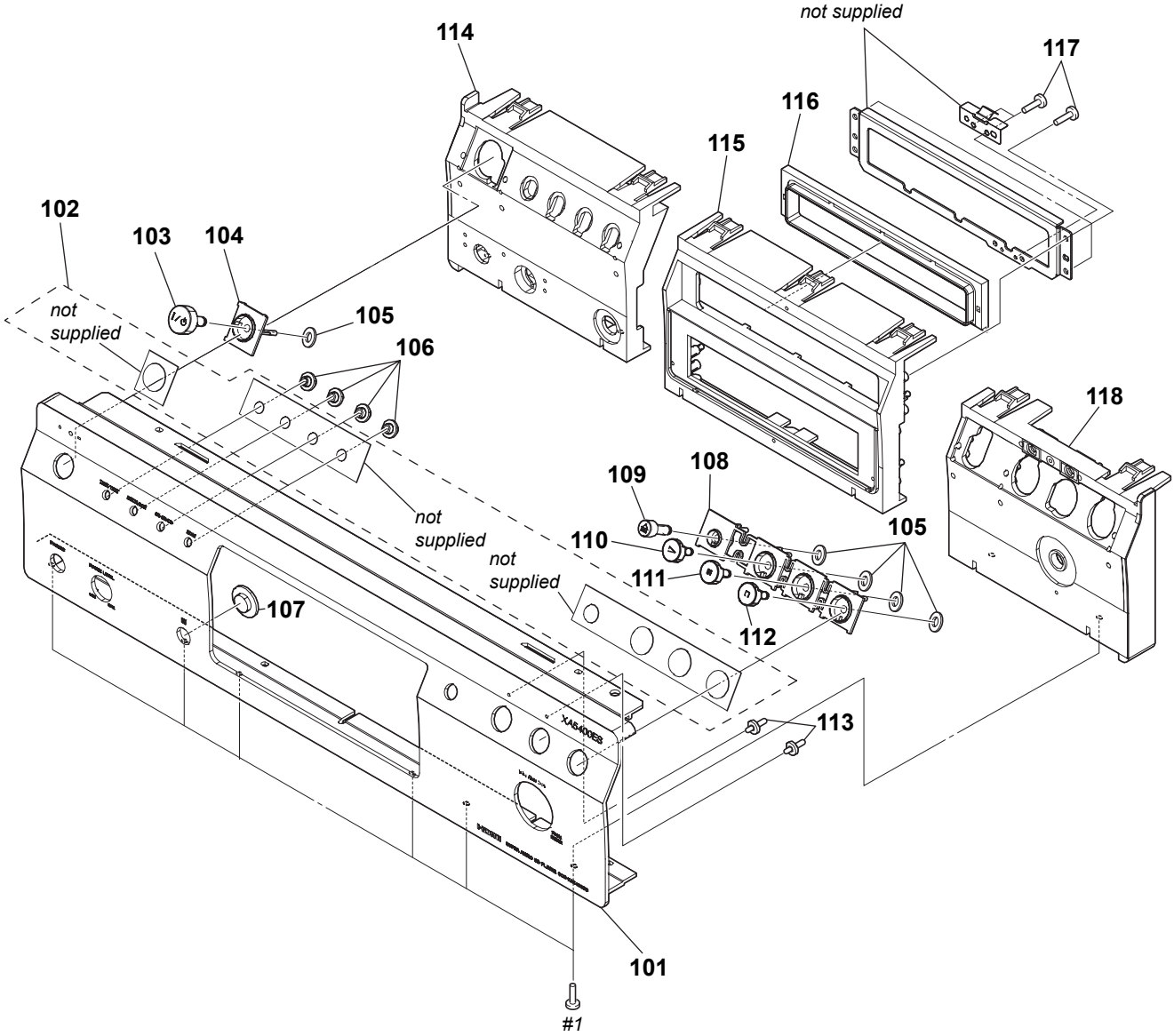

Ref. No.	Part No.	Description	Remark
101	3-873-309-01	PANEL, FRONT (AEP)	
101	3-873-309-11	PANEL, FRONT (US, CND)	
102	4-250-643-01	SHEET (ES-A), ADHESIVE	
103	4-246-567-91	BUTTON (PLAY) (I/⏻)	
104	4-246-563-31	ESCUTCHEON (A)	
105	3-325-697-21	WASHER	
106	4-220-317-01	BUTTON (FILTER)	
107	4-975-105-01	WINDOW, RAY CATCHER	
108	4-246-563-21	ESCUTCHEON (A)	
109	4-246-568-01	BUTTON (OPEN) (⏏)	
110	4-246-567-01	BUTTON (PLAY) (►)	
111	4-246-567-31	BUTTON (PLAY) (❚❚)	
112	4-246-567-61	BUTTON (PLAY) (■)	
113	X-4950-462-1	LENS ASSY, LED	
114	3-873-310-01	BASE (L), PANEL	
115	3-873-312-01	BASE (C), PANEL	
116	4-235-619-01	PACKING (LOADING)	
117	3-087-053-01	+BVTP2.6 (3CR)	
118	3-873-311-01	BASE (R), PANEL	
#1	7-685-646-79	SCREW +BVTP 3X8 TYPE2 IT-3	

7-4. MAIN BOARD SECTION

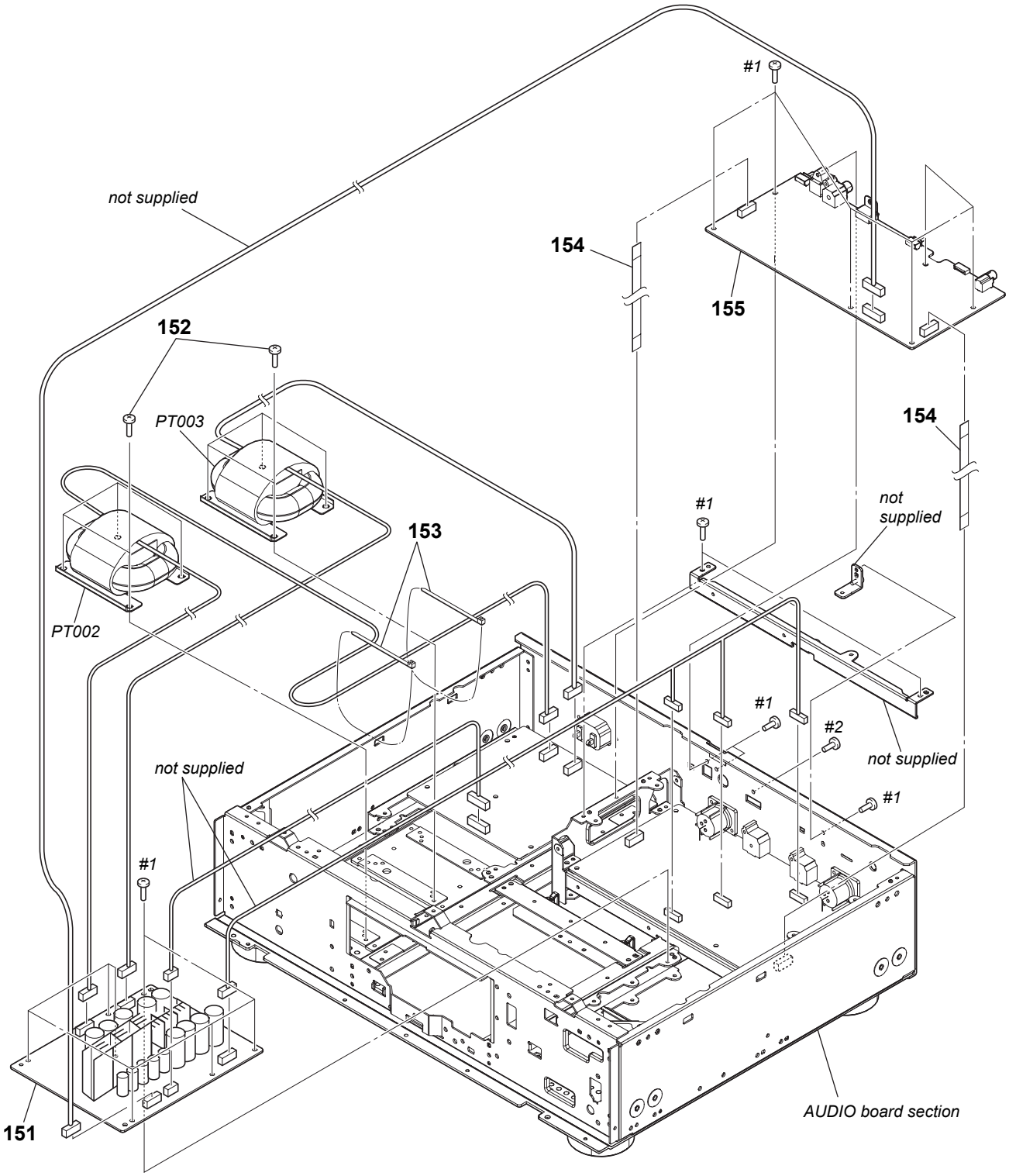

Ref. No.	Part No.	Description	Remark
151	A-1544-253-A	POWER BOARD, COMPLETE (US, CND)	
151	A-1560-484-A	POWER BOARD, COMPLETE (AEP)	
152	3-703-249-02	SCREW, S TIGHT, +PTTWH 3X6	
153	3-655-653-01	BAND (TAITON), BINDING	
154	1-828-326-51	WIRE (FLAT TYPE) (13 CORE)	
🔒 155	A-1567-301-A	MAIN BOARD, COMPLETE (for SERVICE)	(US, CND)

Ref. No.	Part No.	Description	Remark
🔒 155	A-1567-313-A	MAIN BOARD, COMPLETE (for SERVICE) (AEP)	
⚠ PT002	1-445-487-11	TRANSFORMER, POWER (US, CND)	
⚠ PT002	1-445-488-11	TRANSFORMER, POWER (AEP)	
⚠ PT003	1-445-483-11	TRANSFORMER, POWER (US, CND)	
⚠ PT003	1-445-484-11	TRANSFORMER, POWER (AEP)	
#1	7-685-646-79	SCREW +BVTP 3X8 TYPE2 IT-3	
#2	7-682-547-04	SCREW +B 3X6	

7-5. AUDIO BOARD SECTION

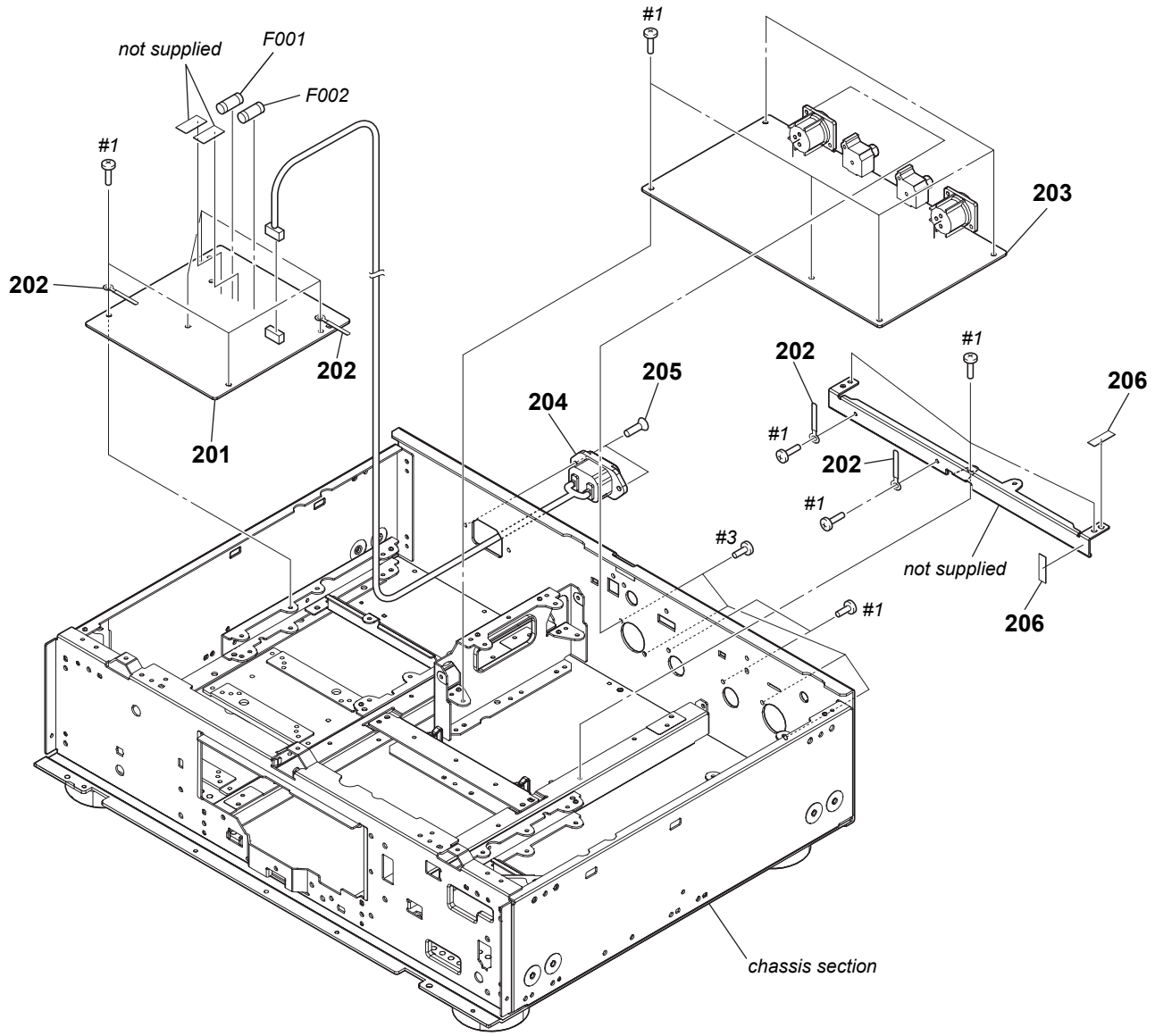

Ref. No.	Part No.	Description	Remark
201	A-1544-254-A	STANDBY BOARD, COMPLETE (US, CND)	
201	A-1544-320-A	STANDBY BOARD, COMPLETE (AEP)	
202	4-237-065-01	CLAMP (L35)	
203	A-1544-251-A	AUDIO BOARD, COMPLETE (US, CND)	
203	A-1560-483-A	AUDIO BOARD, COMPLETE (AEP)	
⚠ 204	1-821-082-41	AC INLET (2P) (∿ AC IN)	
205	2-580-644-01	SCREW, +KTP2 3X8	

Ref. No.	Part No.	Description	Remark
206	4-860-518-00	CUSHION	
⚠ F001	1-532-389-33	FUSE (T500mA/250V) (AEP)	
⚠ F001	1-532-501-33	FUSE (T800mA/250V) (US, CND)	
⚠ F002	1-532-389-33	FUSE (T500mA/250V) (AEP)	
⚠ F002	1-532-501-33	FUSE (T800mA/250V) (US, CND)	
#1	7-685-646-79	SCREW +BVTP 3X8 TYPE2 IT-3	
#3	7-621-770-67	SCREW +B 2.6X6	

7-6. CHASSIS SECTION

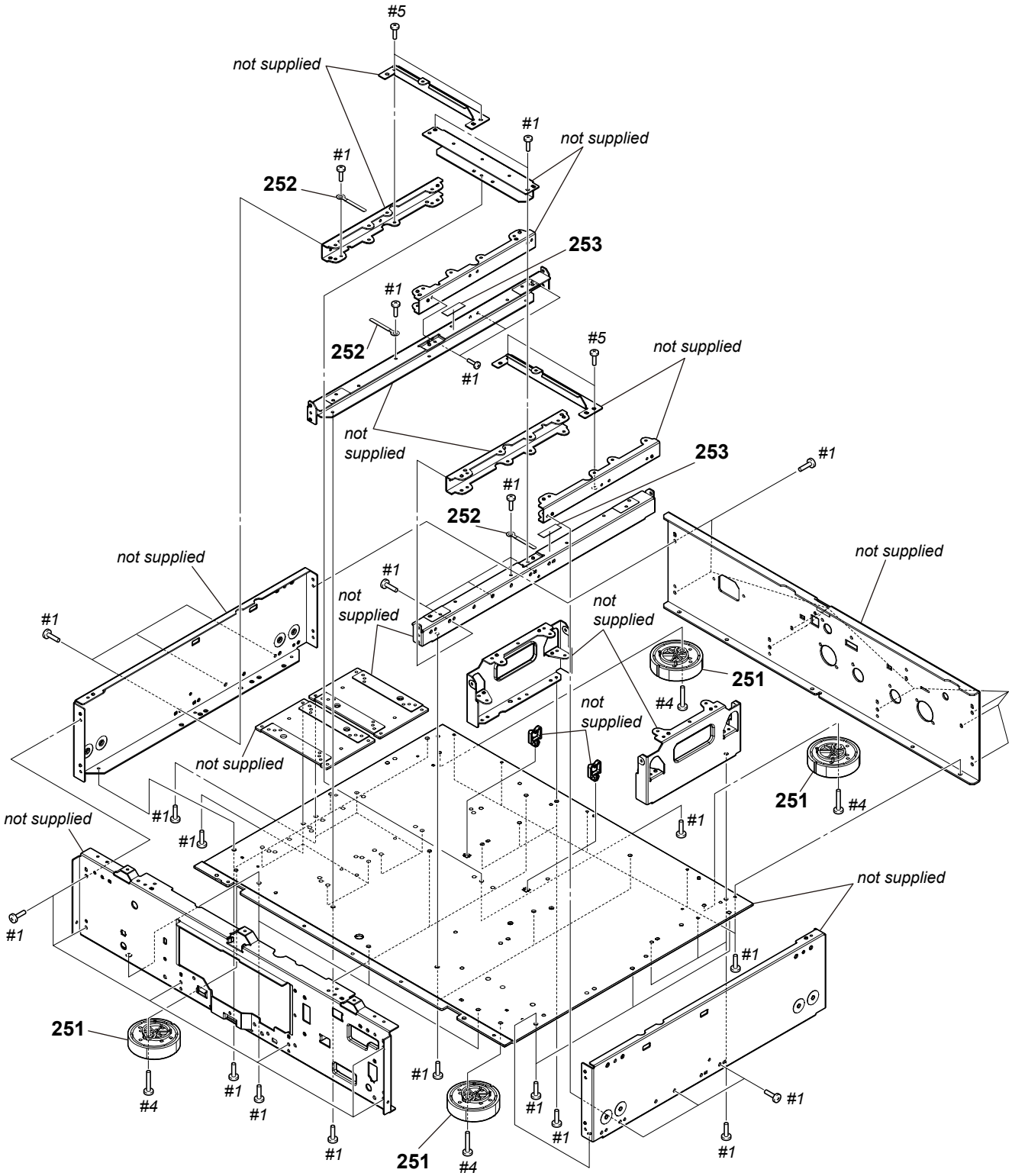

Ref. No.	Part No.	Description	Remark
251	X-4955-348-1	FOOT ASSY	
252	4-237-065-01	CLAMP (L35)	
253	4-860-518-00	CUSHION	
#1	7-685-646-79	SCREW +BVTP 3X8 TYPE2 IT-3	
#4	7-685-885-09	SCREW +BVTT 4X16 (S)	
#5	7-685-645-79	SCREW +BVTP 3X6 TYPE2 IT-3	

7-7. MECHANISM DECK SECTION (CDM66F-DVBU101)

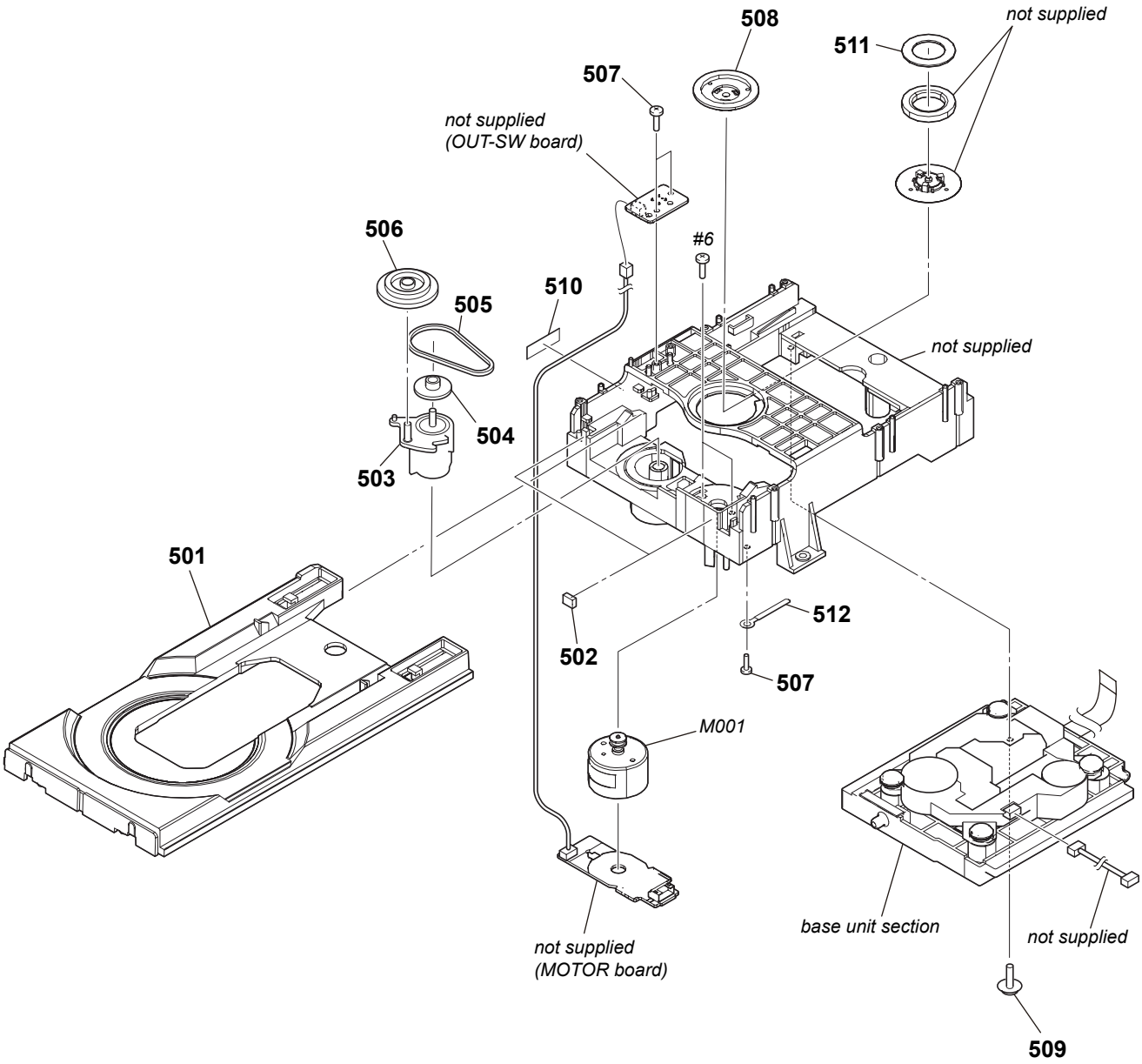

Ref. No.	Part No.	Description	Remark
501	3-452-881-01	TRAY (66F)	
502	4-232-682-01	CUSHION (66)	
503	4-232-712-01	CAM (66)	
504	4-232-710-01	PULLEY (LD)	
505	4-232-713-01	BELT (LD)	
506	4-232-711-01	GEAR (LD)	
507	3-087-053-01	+BVTP2.6 (3CR)	
508	3-452-884-01	HOLDER (YOKE)	
509	4-227-899-31	SCREW (DIA. 12), FROATING	
510	4-860-518-00	CUSHION	
511	3-452-883-01	YOKE	
512	4-237-065-01	CLAMP (L35)	
M001	A-4604-363-A	MOTOR (L) ASSY (LOADING)	
#6	7-621-775-10	SCREW +B 2.6X4	

7-8. BASE UNIT SECTION

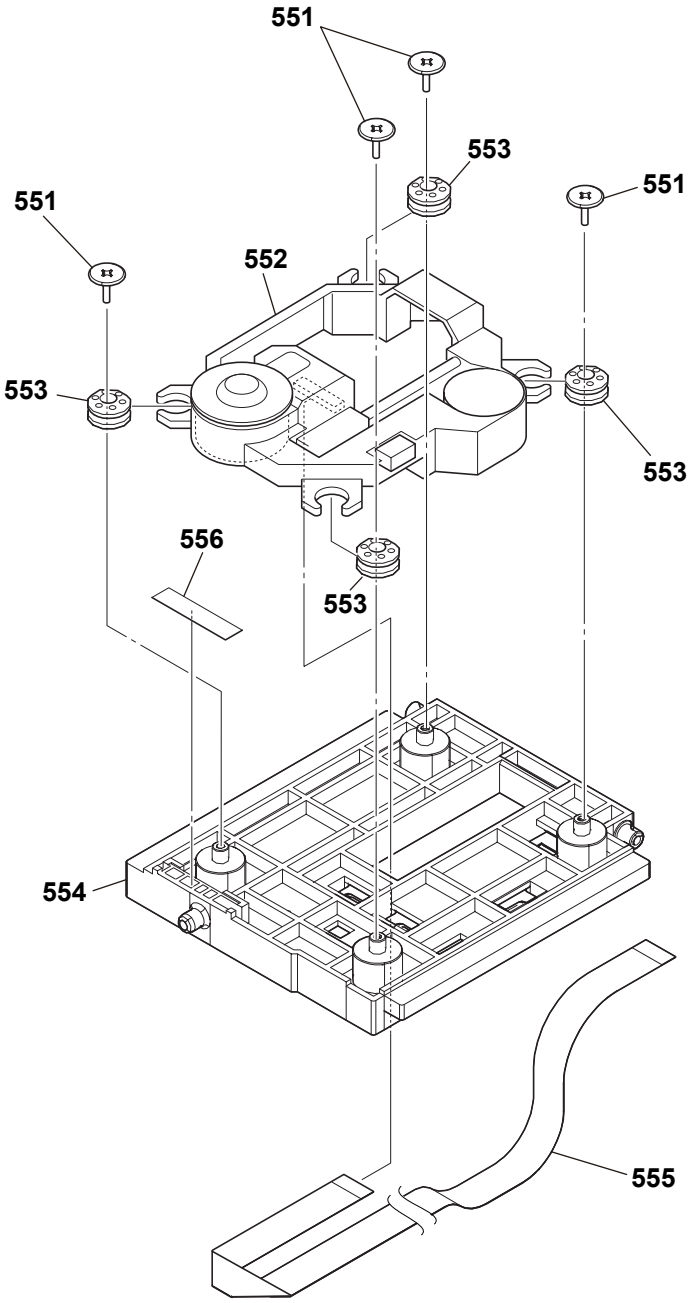

Note: If wire (flat type) is replaced, install it after bending it in the same form as that before replacement.

Ref. No.	Part No.	Description	Remark
551	3-087-599-01	INSULATOR SCREW	
⚠ 552	8-820-322-04	OPTICAL PICK-UP BLOCK (KHM-313CAB/C2RP)	
553	2-634-618-11	INSULATOR	
554	3-452-882-01	HOLDER (66F)	
555	1-835-373-51	WIRE (FLAT TYPE) (24 CORE)	
556	4-113-450-01	CUSHION (66F)	

SECTION 8
ELECTRICAL PARTS LIST

AUDIO

Note:
- Due to standardization, replacements in the parts list may be different from the parts specified in the diagrams or the components used on the set.
- -XX and -X mean standardized parts, so they may have some difference from the original one.
- Items marked "*" are not stocked since they are seldom required for routine service. Some delay should be anticipated when ordering these items.
- CAPACITORS
  uF: µF
- COILS
  uH: µH
- RESISTORS
  All resistors are in ohms.
  METAL: Metal-film resistor.
  METAL OXIDE: Metal oxide-film resistor.
  F: nonflammable
- SEMICONDUCTORS
  In each case, u: µ, for example:
  uA. . : µA. . , uPA. . , µPA. . ,
  uPB. . : µPB. . , uPC. . , µPC. . ,
  uPD. . : µPD. .
- Abbreviation
  CND : Canadian model

When indicating parts by reference number, please include the board name.

The components identified by mark ⚠ or dotted line with mark ⚠ are critical for safety.
Replace only with part number specified.

Les composants identifiés par une marque ⚠ sont critiques pour la sécurité.
Ne les remplacer que par une pièce portant le numéro spécifié.

The components identified by mark 🔒 contain confidential information.
Strictly follow the instructions whenever the components are repaired and/or replaced.

Les composants identifiés par la marque 🔒 contiennent des informations confidentielles.
Suivre scrupuleusement les instructions chaque fois qu'un composant est remplacé et / ou réparé.

Ref. No.	Part No.	Description			Remark
	A-1544-251-A	AUDIO BOARD, COMPLETE (US, CND)			
	A-1560-483-A	AUDIO BOARD, COMPLETE (AEP)			
		**********			
		< CAPACITOR >			
C151	1-100-566-91	CERAMIC CHIP	0.1uF	10%	25V
C152	1-100-566-91	CERAMIC CHIP	0.1uF	10%	25V
C153	1-162-917-11	CERAMIC CHIP	15PF	5%	50V
C154	1-162-918-11	CERAMIC CHIP	18PF	5%	50V
C155	1-162-962-11	CERAMIC CHIP	470PF	10%	50V
C156	1-100-390-21	ELECT CHIP	180uF	20%	6.3V
C157	1-100-566-91	CERAMIC CHIP	0.1uF	10%	25V
C158	1-100-566-91	CERAMIC CHIP	0.1uF	10%	25V
C159	1-100-388-21	ELECT CHIP	39uF	20%	16V
C160	1-162-962-11	CERAMIC CHIP	470PF	10%	50V
C161	1-100-566-91	CERAMIC CHIP	0.1uF	10%	25V
C162	1-100-566-91	CERAMIC CHIP	0.1uF	10%	25V
C163	1-100-390-21	ELECT CHIP	180uF	20%	6.3V
C164	1-127-956-21	FILM CHIP	0.1uF	5%	16V
C165	1-128-528-11	ELECT	470uF	20%	25V
C166	1-124-699-11	ELECT	220uF	20%	25V
C167	1-124-699-11	ELECT	220uF	20%	25V
C168	1-100-566-91	CERAMIC CHIP	0.1uF	10%	25V
C169	1-162-962-11	CERAMIC CHIP	470PF	10%	50V
C170	1-100-566-91	CERAMIC CHIP	0.1uF	10%	25V
C171	1-100-566-91	CERAMIC CHIP	0.1uF	10%	25V
C172	1-100-566-91	CERAMIC CHIP	0.1uF	10%	25V
C173	1-100-566-91	CERAMIC CHIP	0.1uF	10%	25V
C174	1-100-566-91	CERAMIC CHIP	0.1uF	10%	25V
C175	1-162-971-11	CERAMIC CHIP	0.001uF	10%	50V
C176	1-162-971-11	CERAMIC CHIP	0.001uF	10%	50V
C177	1-162-971-11	CERAMIC CHIP	0.001uF	10%	50V
C179	1-100-566-91	CERAMIC CHIP	0.1uF	10%	25V
C180	1-100-566-91	CERAMIC CHIP	0.1uF	10%	25V
C181	1-124-779-00	ELECT CHIP	10uF	20%	16V
C182	1-162-962-11	CERAMIC CHIP	470PF	10%	50V
C183	1-100-390-21	ELECT CHIP	180uF	20%	6.3V
C200	1-100-756-91	CERAMIC CHIP	0.047uF		50V
C201	1-100-756-91	CERAMIC CHIP	0.047uF		50V
C204	1-130-471-00	MYLAR	0.001uF	5%	50V
C205	1-100-388-21	ELECT CHIP	39uF	20%	16V

Ref. No.	Part No.	Description			Remark
C206	1-127-956-21	FILM CHIP	0.1uF	5%	16V
C207	1-127-956-21	FILM CHIP	0.1uF	5%	16V
C208	1-100-388-21	ELECT CHIP	39uF	20%	16V
C209	1-100-390-21	ELECT CHIP	180uF	20%	6.3V
C210	1-127-956-21	FILM CHIP	0.1uF	5%	16V
C211	1-136-287-11	FILM	0.0047uF	5%	100V
C212	1-136-287-11	FILM	0.0047uF	5%	100V
C213	1-127-956-21	FILM CHIP	0.1uF	5%	16V
C214	1-127-956-21	FILM CHIP	0.1uF	5%	16V
C215	1-136-293-11	FILM	0.0082uF	5%	100V
C216	1-136-480-11	FILM	0.0015uF	5%	100V
C217	1-136-480-11	FILM	0.0015uF	5%	100V
C218	1-127-956-21	FILM CHIP	0.1uF	5%	16V
C219	1-127-956-21	FILM CHIP	0.1uF	5%	16V
C220	1-114-959-91	ELECT	47uF	20%	100V
C221	1-127-956-21	FILM CHIP	0.1uF	5%	16V
C222	1-137-350-11	FILM	0.015uF	5%	100V
C223	1-136-480-11	FILM	0.0015uF	5%	100V
C224	1-137-350-11	FILM	0.015uF	5%	100V
C225	1-136-480-11	FILM	0.0015uF	5%	100V
C226	1-127-956-21	FILM CHIP	0.1uF	5%	16V
C227	1-127-956-21	FILM CHIP	0.1uF	5%	16V
C228	1-114-959-91	ELECT	47uF	20%	100V
C229	1-127-956-21	FILM CHIP	0.1uF	5%	16V
C230	1-114-959-91	ELECT	47uF	20%	100V
C231	1-127-956-21	FILM CHIP	0.1uF	5%	16V
C232	1-163-133-00	CERAMIC CHIP	470PF	5%	50V (AEP)
C252	1-100-756-91	CERAMIC CHIP	0.047uF		50V
C254	1-130-471-00	MYLAR	0.001uF	5%	50V
C255	1-100-388-21	ELECT CHIP	39uF	20%	16V
C256	1-127-956-21	FILM CHIP	0.1uF	5%	16V
C261	1-136-287-11	FILM	0.0047uF	5%	100V
C262	1-136-287-11	FILM	0.0047uF	5%	100V
C263	1-127-956-21	FILM CHIP	0.1uF	5%	16V
C264	1-127-956-21	FILM CHIP	0.1uF	5%	16V
C265	1-136-293-11	FILM	0.0082uF	5%	100V
C266	1-136-480-11	FILM	0.0015uF	5%	100V
C267	1-136-480-11	FILM	0.0015uF	5%	100V
C270	1-114-959-91	ELECT	47uF	20%	100V
C271	1-127-956-21	FILM CHIP	0.1uF	5%	16V
C272	1-137-350-11	FILM	0.015uF	5%	100V

AUDIO

Ref. No.	Part No.	Description			Remark
C273	1-136-480-11	FILM	0.0015uF	5%	100V
C274	1-137-350-11	FILM	0.015uF	5%	100V
C275	1-136-480-11	FILM	0.0015uF	5%	100V
C276	1-127-956-21	FILM CHIP	0.1uF	5%	16V
C277	1-127-956-21	FILM CHIP	0.1uF	5%	16V
C278	1-114-959-91	ELECT	47uF	20%	100V
C279	1-127-956-21	FILM CHIP	0.1uF	5%	16V
C280	1-114-959-91	ELECT	47uF	20%	100V
C281	1-127-956-21	FILM CHIP	0.1uF	5%	16V
C282	1-163-133-00	CERAMIC CHIP	470PF	5%	50V (AEP)
C291	1-127-956-21	FILM CHIP	0.1uF	5%	16V
C292	1-127-956-21	FILM CHIP	0.1uF	5%	16V
C293	1-100-756-91	CERAMIC CHIP	0.047uF		50V
C294	1-112-080-11	ELECT	470uF	20%	10V
C295	1-112-080-11	ELECT	470uF	20%	10V
C296	1-112-099-11	ELECT	4.7uF	20%	50V
C297	1-112-099-11	ELECT	4.7uF	20%	50V
		< CONNECTOR >			
CN151	1-785-468-41	CONNECTOR, FFC/FPC 13P			
CN152	1-785-468-41	CONNECTOR, FFC/FPC 13P			
* CN154	1-569-974-11	PIN, CONNECTOR (PC BOARD) 3P			
CN155	1-691-766-11	PLUG (MICRO CONNECTOR) 4P			
CN156	1-564-505-11	PLUG, CONNECTOR 2P			
CN291	1-779-978-11	PIN, CONNECTOR 3P			
		< DIODE >			
D201	6-501-817-01	DIODE MA2J1110GLS0			
D202	6-501-817-01	DIODE MA2J1110GLS0			
D252	6-501-817-01	DIODE MA2J1110GLS0			
D291	6-501-817-01	DIODE MA2J1110GLS0			
		< TERMINAL >			
EE151	1-780-318-11	TERMINAL			
EE152	1-780-318-11	TERMINAL			
EE153	1-780-318-11	TERMINAL			
		< FERRITE BEAD >			
FB151	1-469-139-21	FERRITE, EMI (SMD) (2012)			
FB152	1-469-152-11	FERRITE, EMI (SMD) (2012)			
FB153	1-469-152-11	FERRITE, EMI (SMD) (2012)			
		< IC >			
IC151	6-708-071-01	IC FS7140-01G			
IC152	8-759-242-70	IC TC7WU04F			
IC153	6-702-302-01	IC TK11133CSCL-G			
IC154	6-703-227-01	IC TK11131CSCL-G (US, CND)			
IC154	8-759-828-44	IC NJM2870F33 (TE2) (AEP)			
IC155	8-759-083-94	IC TC7W74FU			
IC156	6-700-067-01	IC HD74LV161ATELL			
IC201	8-759-828-44	IC NJM2870F33 (TE2)			
IC202	6-707-503-01	IC DSD1796DBR			
IC203	8-759-566-39	IC OPA2132UA/2K5			
IC204	8-759-566-39	IC OPA2132UA/2K5			
IC205	8-759-447-30	IC NJM2114M-TE2			
IC206	8-759-082-58	IC TC7W08FU			
IC253	8-759-566-39	IC OPA2132UA/2K5			
IC255	8-759-447-30	IC NJM2114M-TE2			
IC291	8-759-700-09	IC NJM2043M-D			
IC292	8-759-592-44	IC TC7SZ04FU (TE85R)			

Ref. No.	Part No.	Description			Remark
		< JACK >			
J201	1-818-094-11	JACK, PIN 1P (AUDIO OUT UNBALANCED L)			
J202	1-764-393-11	CONNECTOR (XLR TYPE) 3P (AUDIO OUT UNBALANCED L)			
J251	1-818-095-11	JACK, PIN 1P (AUDIO OUT UNBALANCED R)			
J252	1-764-393-11	CONNECTOR (XLR TYPE) 3P (AUDIO OUT UNBALANCED R)			
		< JUMPER RESISTOR/FERRITE BEAD >			
JW150	1-216-295-91	SHORT CHIP 0 (AEP)			
JW150	1-469-670-21	FERRITE, EMI (SMD) (2012) (US, CND)			
		< TRANSISTOR >			
Q151	8-729-027-43	TRANSISTOR DTC114EKA-T146			
Q201	8-729-027-23	TRANSISTOR DTA114EKA-T146			
Q202	8-729-027-23	TRANSISTOR DTA114EKA-T146			
Q203	8-729-027-43	TRANSISTOR DTC114EKA-T146			
Q204	8-729-027-43	TRANSISTOR DTC114EKA-T146			
Q252	8-729-027-23	TRANSISTOR DTA114EKA-T146			
Q253	8-729-027-43	TRANSISTOR DTC114EKA-T146			
Q291	8-729-027-23	TRANSISTOR DTA114EKA-T146			
Q292	8-729-027-43	TRANSISTOR DTC114EKA-T146			
Q293	8-729-027-23	TRANSISTOR DTA114EKA-T146			
		< RESISTOR >			
R150	1-216-801-11	METAL CHIP	22	5%	1/10W
R151	1-216-811-11	METAL CHIP	150	5%	1/10W
R152	1-216-801-11	METAL CHIP	22	5%	1/10W
R153	1-216-815-11	METAL CHIP	330	5%	1/10W
R154	1-216-857-11	METAL CHIP	1M	5%	1/10W
R155	1-216-809-11	METAL CHIP	100	5%	1/10W
R156	1-216-801-11	METAL CHIP	22	5%	1/10W
R157	1-216-801-11	METAL CHIP	22	5%	1/10W
R158	1-216-809-11	METAL CHIP	100	5%	1/10W
R159	1-216-833-11	METAL CHIP	10K	5%	1/10W
R160	1-216-801-11	METAL CHIP	22	5%	1/10W
R161	1-216-801-11	METAL CHIP	22	5%	1/10W
R162	1-216-801-11	METAL CHIP	22	5%	1/10W
R163	1-216-801-11	METAL CHIP	22	5%	1/10W
R164	1-216-801-11	METAL CHIP	22	5%	1/10W
R165	1-216-801-11	METAL CHIP	22	5%	1/10W
R166	1-216-809-11	METAL CHIP	100	5%	1/10W
R167	1-216-809-11	METAL CHIP	100	5%	1/10W
R168	1-216-809-11	METAL CHIP	100	5%	1/10W
R169	1-216-809-11	METAL CHIP	100	5%	1/10W
R171	1-216-833-11	METAL CHIP	10K	5%	1/10W
R173	1-216-833-11	METAL CHIP	10K	5%	1/10W
R174	1-216-833-11	METAL CHIP	10K	5%	1/10W
R175	1-216-801-11	METAL CHIP	22	5%	1/10W
R176	1-216-801-11	METAL CHIP	22	5%	1/10W
R177	1-216-801-11	METAL CHIP	22	5%	1/10W
R178	1-216-801-11	METAL CHIP	22	5%	1/10W
R179	1-216-801-11	METAL CHIP	22	5%	1/10W
R180	1-216-801-11	METAL CHIP	22	5%	1/10W
R181	1-216-801-11	METAL CHIP	22	5%	1/10W
R182	1-216-801-11	METAL CHIP	22	5%	1/10W
R183	1-216-801-11	METAL CHIP	22	5%	1/10W
R184	1-216-833-11	METAL CHIP	10K	5%	1/10W
R185	1-216-833-11	METAL CHIP	10K	5%	1/10W
R201	1-218-716-11	METAL CHIP	10K	0.5%	1/10W

Ref. No.	Part No.	Description			Remark
R202	1-247-750-11	CARBON	680	5%	1/2W
R203	1-247-750-11	CARBON	680	5%	1/2W
R204	1-247-749-11	CARBON	560	5%	1/2W
R205	1-247-750-11	CARBON	680	5%	1/2W
R206	1-247-749-11	CARBON	560	5%	1/2W
R207	1-247-749-11	CARBON	560	5%	1/2W
R208	1-247-750-11	CARBON	680	5%	1/2W
R209	1-247-749-11	CARBON	560	5%	1/2W
R210	1-249-194-11	CARBON	220	5%	1/3W
R211	1-214-921-00	CARBON	220K	5%	1/3W
R212	1-249-162-11	CARBON	10	5%	1/3W
R213	1-216-833-11	METAL CHIP	10K	5%	1/10W
R222	1-247-749-11	CARBON	560	5%	1/2W
R223	1-247-750-11	CARBON	680	5%	1/2W
R224	1-247-749-11	CARBON	560	5%	1/2W
R225	1-247-749-11	CARBON	560	5%	1/2W
R226	1-247-750-11	CARBON	680	5%	1/2W
R227	1-247-749-11	CARBON	560	5%	1/2W
R228	1-249-194-11	CARBON	220	5%	1/3W
R229	1-214-921-00	CARBON	220K	5%	1/3W
R230	1-249-162-11	CARBON	10	5%	1/3W
R231	1-249-194-11	CARBON	220	5%	1/3W
R232	1-214-921-00	CARBON	220K	5%	1/3W
R233	1-249-162-11	CARBON	10	5%	1/3W
R252	1-247-750-11	CARBON	680	5%	1/2W
R253	1-247-750-11	CARBON	680	5%	1/2W
R254	1-247-749-11	CARBON	560	5%	1/2W
R255	1-247-750-11	CARBON	680	5%	1/2W
R256	1-247-749-11	CARBON	560	5%	1/2W
R257	1-247-749-11	CARBON	560	5%	1/2W
R258	1-247-750-11	CARBON	680	5%	1/2W
R259	1-247-749-11	CARBON	560	5%	1/2W
R260	1-249-194-11	CARBON	220	5%	1/3W
R261	1-214-921-00	CARBON	220K	5%	1/3W
R262	1-249-162-11	CARBON	10	5%	1/3W
R272	1-247-749-11	CARBON	560	5%	1/2W
R273	1-247-750-11	CARBON	680	5%	1/2W
R274	1-247-749-11	CARBON	560	5%	1/2W
R275	1-247-749-11	CARBON	560	5%	1/2W
R276	1-247-750-11	CARBON	680	5%	1/2W
R277	1-247-749-11	CARBON	560	5%	1/2W
R278	1-249-194-11	CARBON	220	5%	1/3W
R279	1-214-921-00	CARBON	220K	5%	1/3W
R280	1-249-162-11	CARBON	10	5%	1/3W
R281	1-249-194-11	CARBON	220	5%	1/3W
R282	1-214-921-00	CARBON	220K	5%	1/3W
R283	1-249-162-11	CARBON	10	5%	1/3W
R288	1-216-809-11	METAL CHIP	100	5%	1/10W
R289	1-216-809-11	METAL CHIP	100	5%	1/10W
R291	1-216-841-11	METAL CHIP	47K	5%	1/10W
R292	1-216-841-11	METAL CHIP	47K	5%	1/10W
R293	1-216-809-11	METAL CHIP	100	5%	1/10W
R294	1-216-853-11	METAL CHIP	470K	5%	1/10W
R295	1-216-853-11	METAL CHIP	470K	5%	1/10W
R299	1-216-809-11	METAL CHIP	100	5%	1/10W
		< RELAY >			
RY201	1-755-485-11	RELAY			
RY202	1-755-485-11	RELAY			
RY252	1-755-485-11	RELAY			

Ref. No.	Part No.	Description			Remark
RY291	1-755-485-11	RELAY			
		< VIBRATOR >			
X151	1-767-286-11	VIBRATOR, CRYSTAL (22.5792MHz)			
**********					
	A-1544-255-A	DISPLAY BOARD, COMPLETE			
		**********			
*	4-945-292-01	HOLDER, INDICATION TUBE			
	4-949-935-41	CUSHION (FL)			
		< CAPACITOR >			
C803	1-162-970-11	CERAMIC CHIP	0.01uF	10%	25V
C804	1-126-157-11	ELECT	10uF	20%	16V
C806	1-162-962-11	CERAMIC CHIP	470PF	10%	50V
C807	1-162-962-11	CERAMIC CHIP	470PF	10%	50V
C808	1-162-962-11	CERAMIC CHIP	470PF	10%	50V
C810	1-162-949-11	CERAMIC CHIP	47PF	5%	50V
C811	1-126-157-11	ELECT	10uF	20%	16V
C812	1-100-566-91	CERAMIC CHIP	0.1uF	10%	25V
C813	1-100-566-91	CERAMIC CHIP	0.1uF	10%	25V
C818	1-115-339-11	CERAMIC CHIP	0.1uF	10%	50V
		< CONNECTOR >			
CN803	1-779-556-21	CONNECTOR, FFC (LIF (NON-ZIF)) 19P			
* CN804	1-568-946-11	PIN, CONNECTOR 8P			
* CN805	1-568-942-11	PIN, CONNECTOR 4P			
		< DIODE >			
D801	6-501-817-01	DIODE MA2J1110GLS0			
		< IC >			
IC801	6-600-349-31	IC NJL24H400A			
IC802	6-705-899-01	IC ML9208-03MBZ03B			
IC803	8-759-828-44	IC NJM2870F33 (TE2)			
		< FLUORESCENT INDICATOR TUBE >			
ND801	1-483-035-11	INDICATOR TUBE, FLUORESCENT			
		< TRANSISTOR >			
Q802	8-729-027-43	TRANSISTOR DTC114EKA-T146			
		< RESISTOR >			
R804	1-216-805-11	METAL CHIP	47	5%	1/10W
R807	1-216-809-11	METAL CHIP	100	5%	1/10W
R808	1-216-809-11	METAL CHIP	100	5%	1/10W
R809	1-216-809-11	METAL CHIP	100	5%	1/10W
R810	1-216-821-11	METAL CHIP	1K	5%	1/10W
R811	1-216-827-11	METAL CHIP	3.3K	5%	1/10W
R812	1-216-845-11	METAL CHIP	100K	5%	1/10W
**********					
		HP BOARD			
		*********			
		< CAPACITOR >			
C801	1-162-971-11	CERAMIC CHIP	0.001uF	10%	50V
C802	1-162-971-11	CERAMIC CHIP	0.001uF	10%	50V
C819	1-100-566-91	CERAMIC CHIP	0.1uF	10%	25V

HP JOG KEY-L KEY-R LED MAIN

Ref. No.	Part No.	Description				Remark
		< CONNECTOR >				
CN801	1-779-978-11	PIN, CONNECTOR 3P				
		< JACK >				
J801	1-770-904-11	JACK (LARGE TYPE) (PHONES)				
		< FERRITE BEAD >				
L801	1-410-397-21	FERRITE	1.1uH			
L802	1-410-397-21	FERRITE	1.1uH			
L803	1-410-397-21	FERRITE	1.1uH			
		< VARIABLE RESISTOR >				
RV801	1-227-185-11	RES, VAR, CARBON (PHONE LEVEL)				
**********						
		JOG BOARD **********				
		< CAPACITOR >				
C816	1-162-970-11	CERAMIC CHIP	0.01uF	10%	25V	
C817	1-162-970-11	CERAMIC CHIP	0.01uF	10%	25V	
		< CONNECTOR >				
* CN808	1-568-942-11	PIN, CONNECTOR 4P				
		< ROTARY ENCODER >				
S806	1-478-268-11	ENCODER, ROTARY (⏮ ANS ⏭, PUSH ENTER)				
**********						
		KEY-L BOARD **********				
		< CAPACITOR >				
C805	1-100-566-91	CERAMIC CHIP	0.1uF	10%	25V	
		< TRANSISTOR >				
Q801	8-729-027-43	TRANSISTOR	DTC114EKA-T146			
		< RESISTOR >				
R801	1-216-821-11	METAL CHIP	1K	5%	1/10W	
R802	1-216-825-11	METAL CHIP	2.2K	5%	1/10W	
R803	1-216-825-11	METAL CHIP	2.2K	5%	1/10W	
R805	1-216-829-11	METAL CHIP	4.7K	5%	1/10W	
R806	1-216-811-11	METAL CHIP	150	5%	1/10W	
		< SWITCH >				
S801	1-762-875-21	SWITCH, KEYBOARD (I/⏻)				
S802	1-570-969-11	SWITCH, KEY BOARD (TIME/TEXT)				
S803	1-570-969-11	SWITCH, KEY BOARD (MULTI/2CH)				
S804	1-570-969-11	SWITCH, KEY BOARD (SA-CD/CD)				
S805	1-570-101-51	SWITCH, KEY BOARD (HDMI)				
**********						
		KEY-R BOARD (including LED board) **********				
		< TRANSISTOR >				
Q803	8-729-027-43	TRANSISTOR	DTC114EKA-T146			
Q804	8-729-027-43	TRANSISTOR	DTC114EKA-T146			

Ref. No.	Part No.	Description				Remark
		< RESISTOR >				
R813	1-216-821-11	METAL CHIP	1K	5%	1/10W	
R814	1-216-821-11	METAL CHIP	1K	5%	1/10W	
R815	1-216-825-11	METAL CHIP	2.2K	5%	1/10W	
R816	1-216-811-11	METAL CHIP	150	5%	1/10W	
R817	1-216-813-11	METAL CHIP	220	5%	1/10W	
		< SWITCH >				
S807	1-762-875-21	SWITCH, KEYBOARD (⏏)				
S808	1-762-875-21	SWITCH, KEYBOARD (►)				
S809	1-762-875-21	SWITCH, KEYBOARD (❚❚)				
S810	1-762-875-21	SWITCH, KEYBOARD (■)				
**********						
		LED BOARD (included in KEY-R board) **********				
		< CAPACITOR >				
C814	1-100-566-91	CERAMIC CHIP	0.1uF	10%	25V	
C815	1-100-566-91	CERAMIC CHIP	0.1uF	10%	25V	
		< LED >				
D802	8-719-046-41	LED SEL5521C-TP15 (►)				
D803	8-719-046-39	LED SEL5821A-TP15 (❚❚)				
**********						
🔒	A-1567-301-A	MAIN BOARD, COMPLETE (for SERVICE) (US, CND)				
🔒	A-1567-313-A	MAIN BOARD, COMPLETE (for SERVICE) (AEP) **********				
		< CAPACITOR >				
C501	1-107-826-11	CERAMIC CHIP	0.1uF	10%	16V	
C502	1-107-826-11	CERAMIC CHIP	0.1uF	10%	16V	
C503	1-107-826-11	CERAMIC CHIP	0.1uF	10%	16V	
C507	1-107-826-11	CERAMIC CHIP	0.1uF	10%	16V	
C508	1-107-826-11	CERAMIC CHIP	0.1uF	10%	16V	
C510	1-107-826-11	CERAMIC CHIP	0.1uF	10%	16V	
C515	1-107-826-11	CERAMIC CHIP	0.1uF	10%	16V	
C517	1-107-826-11	CERAMIC CHIP	0.1uF	10%	16V	
C518	1-107-826-11	CERAMIC CHIP	0.1uF	10%	16V	
C520	1-127-715-11	CERAMIC CHIP	0.22uF	10%	16V	
C521	1-162-970-11	CERAMIC CHIP	0.01uF	10%	25V	
C522	1-127-715-11	CERAMIC CHIP	0.22uF	10%	16V	
C523	1-107-826-11	CERAMIC CHIP	0.1uF	10%	16V	
C526	1-104-658-91	ELECT	100uF	20%	10V	
C527	1-104-656-11	ELECT	2200uF	20%	6.3V	
C528	1-126-916-11	ELECT	1000uF	20%	6.3V	
C531	1-107-826-11	CERAMIC CHIP	0.1uF	10%	16V	
C533	1-107-826-11	CERAMIC CHIP	0.1uF	10%	16V	
C538	1-162-964-11	CERAMIC CHIP	0.001uF	10%	50V	
C577	1-162-970-11	CERAMIC CHIP	0.01uF	10%	25V	
C578	1-162-970-11	CERAMIC CHIP	0.01uF	10%	25V	
C579	1-126-933-11	ELECT	100uF	20%	16V	
C580	1-126-933-11	ELECT	100uF	20%	16V	
C581	1-162-970-11	CERAMIC CHIP	0.01uF	10%	25V	
C582	1-107-826-11	CERAMIC CHIP	0.1uF	10%	16V	
C583	1-104-658-91	ELECT	100uF	20%	10V	
C584	1-104-658-91	ELECT	100uF	20%	10V	
C591	1-162-970-11	CERAMIC CHIP	0.01uF	10%	25V	
C592	1-162-970-11	CERAMIC CHIP	0.01uF	10%	25V	

Ref. No.	Part No.	Description			Remark
C593	1-104-658-91	ELECT	100uF	20%	10V
C594	1-104-658-91	ELECT	100uF	20%	10V
C691	1-128-994-21	ELECT CHIP	47uF	20%	10V (US, CND)
C692	1-107-826-11	CERAMIC CHIP	0.1uF	10%	16V (US, CND)
C693	1-126-601-11	ELECT CHIP	2.2uF	20%	50V (US, CND)
C1101	1-162-970-11	CERAMIC CHIP	0.01uF	10%	25V
C1103	1-107-826-11	CERAMIC CHIP	0.1uF	10%	16V
C1105	1-128-994-21	ELECT CHIP	47uF	20%	10V
C1106	1-162-970-11	CERAMIC CHIP	0.01uF	10%	25V
C1108	1-107-826-11	CERAMIC CHIP	0.1uF	10%	16V
C1109	1-107-826-11	CERAMIC CHIP	0.1uF	10%	16V
C1110	1-165-908-11	CERAMIC CHIP	1uF	10%	10V
C1111	1-100-390-21	ELECT CHIP	180uF	20%	6.3V
C1112	1-128-994-21	ELECT CHIP	47uF	20%	10V
C1113	1-162-970-11	CERAMIC CHIP	0.01uF	10%	25V
C1114	1-107-826-11	CERAMIC CHIP	0.1uF	10%	16V
C1115	1-107-826-11	CERAMIC CHIP	0.1uF	10%	16V
C1116	1-107-826-11	CERAMIC CHIP	0.1uF	10%	16V
C1117	1-128-994-21	ELECT CHIP	47uF	20%	10V
C1118	1-128-994-21	ELECT CHIP	47uF	20%	10V
C1119	1-128-994-21	ELECT CHIP	47uF	20%	10V
C1120	1-165-908-11	CERAMIC CHIP	1uF	10%	10V
C1121	1-165-908-11	CERAMIC CHIP	1uF	10%	10V
C1122	1-165-908-11	CERAMIC CHIP	1uF	10%	10V
C1123	1-165-908-11	CERAMIC CHIP	1uF	10%	10V
C1124	1-165-908-11	CERAMIC CHIP	1uF	10%	10V
C1125	1-107-826-11	CERAMIC CHIP	0.1uF	10%	16V
C1126	1-107-826-11	CERAMIC CHIP	0.1uF	10%	16V
C1127	1-162-970-11	CERAMIC CHIP	0.01uF	10%	25V
C1129	1-165-989-11	CERAMIC CHIP	10uF	10%	6.3V
C1130	1-107-826-11	CERAMIC CHIP	0.1uF	10%	16V
C1132	1-107-826-11	CERAMIC CHIP	0.1uF	10%	16V
C1133	1-107-826-11	CERAMIC CHIP	0.1uF	10%	16V
C1135	1-164-677-11	CERAMIC CHIP	0.033uF	10%	16V
C1136	1-162-970-11	CERAMIC CHIP	0.01uF	10%	25V
C1137	1-107-826-11	CERAMIC CHIP	0.1uF	10%	16V
C1138	1-162-964-11	CERAMIC CHIP	0.001uF	10%	50V
C1139	1-162-919-11	CERAMIC CHIP	22PF	5%	50V
C1140	1-107-826-11	CERAMIC CHIP	0.1uF	10%	16V
C1144	1-162-970-11	CERAMIC CHIP	0.01uF	10%	25V
C1145	1-124-779-00	ELECT CHIP	10uF	20%	16V
C1146	1-107-826-11	CERAMIC CHIP	0.1uF	10%	16V
C1147	1-165-176-11	CERAMIC CHIP	0.047uF	10%	16V
C1148	1-165-176-11	CERAMIC CHIP	0.047uF	10%	16V
C1149	1-107-826-11	CERAMIC CHIP	0.1uF	10%	16V
C1151	1-162-964-11	CERAMIC CHIP	0.001uF	10%	50V
C1154	1-107-826-11	CERAMIC CHIP	0.1uF	10%	16V
C1155	1-162-970-11	CERAMIC CHIP	0.01uF	10%	25V
C1156	1-162-970-11	CERAMIC CHIP	0.01uF	10%	25V
C1158	1-162-970-11	CERAMIC CHIP	0.01uF	10%	25V
C1159	1-107-826-11	CERAMIC CHIP	0.1uF	10%	16V
C1160	1-162-970-11	CERAMIC CHIP	0.01uF	10%	25V
C1161	1-162-970-11	CERAMIC CHIP	0.01uF	10%	25V
C1162	1-162-970-11	CERAMIC CHIP	0.01uF	10%	25V
C1163	1-162-970-11	CERAMIC CHIP	0.01uF	10%	25V
C1164	1-162-970-11	CERAMIC CHIP	0.01uF	10%	25V
C1165	1-107-826-11	CERAMIC CHIP	0.1uF	10%	16V

Ref. No.	Part No.	Description			Remark
C1169	1-107-826-11	CERAMIC CHIP	0.1uF	10%	16V
C1170	1-162-965-11	CERAMIC CHIP	0.0015uF	10%	50V
C1171	1-107-826-11	CERAMIC CHIP	0.1uF	10%	16V
C1172	1-107-826-11	CERAMIC CHIP	0.1uF	10%	16V
C1174	1-162-970-11	CERAMIC CHIP	0.01uF	10%	25V
C1175	1-162-970-11	CERAMIC CHIP	0.01uF	10%	25V
C1176	1-162-970-11	CERAMIC CHIP	0.01uF	10%	25V
C1177	1-126-925-91	ELECT	470uF	20%	10V
C1179	1-107-826-11	CERAMIC CHIP	0.1uF	10%	16V
C1180	1-107-826-11	CERAMIC CHIP	0.1uF	10%	16V
C1181	1-107-826-11	CERAMIC CHIP	0.1uF	10%	16V
C1182	1-127-715-11	CERAMIC CHIP	0.22uF	10%	16V
C1183	1-128-934-11	CERAMIC CHIP	0.33uF	20%	10V
C1184	1-162-970-11	CERAMIC CHIP	0.01uF	10%	25V
C1186	1-127-715-11	CERAMIC CHIP	0.22uF	10%	16V
C1187	1-100-390-21	ELECT CHIP	180uF	20%	6.3V
C1190	1-100-390-21	ELECT CHIP	180uF	20%	6.3V
C1191	1-107-826-11	CERAMIC CHIP	0.1uF	10%	16V
C1192	1-162-970-11	CERAMIC CHIP	0.01uF	10%	25V
C1193	1-127-715-11	CERAMIC CHIP	0.22uF	10%	16V
C1195	1-127-715-11	CERAMIC CHIP	0.22uF	10%	16V
C1197	1-107-826-11	CERAMIC CHIP	0.1uF	10%	16V
C1198	1-165-908-11	CERAMIC CHIP	1uF	10%	10V
C1199	1-162-968-11	CERAMIC CHIP	0.0047uF	10%	50V
C1203	1-162-970-11	CERAMIC CHIP	0.01uF	10%	25V
C1205	1-164-230-11	CERAMIC CHIP	220PF	5%	50V
C1206	1-164-230-11	CERAMIC CHIP	220PF	5%	50V
C1208	1-162-970-11	CERAMIC CHIP	0.01uF	10%	25V
C1209	1-164-677-11	CERAMIC CHIP	0.033uF	10%	16V
C1210	1-162-970-11	CERAMIC CHIP	0.01uF	10%	25V
C1211	1-164-677-11	CERAMIC CHIP	0.033uF	10%	16V
C1212	1-162-970-11	CERAMIC CHIP	0.01uF	10%	25V
C1213	1-162-970-11	CERAMIC CHIP	0.01uF	10%	25V
C1214	1-162-964-11	CERAMIC CHIP	0.001uF	10%	50V
C1215	1-162-970-11	CERAMIC CHIP	0.01uF	10%	25V
C1217	1-126-204-11	ELECT CHIP	47uF	20%	16V
C1218	1-124-779-00	ELECT CHIP	10uF	20%	16V
C1219	1-162-970-11	CERAMIC CHIP	0.01uF	10%	25V
C1220	1-124-779-00	ELECT CHIP	10uF	20%	16V
C1221	1-107-826-11	CERAMIC CHIP	0.1uF	10%	16V
C1222	1-107-826-11	CERAMIC CHIP	0.1uF	10%	16V
C1223	1-107-826-11	CERAMIC CHIP	0.1uF	10%	16V
C1224	1-162-970-11	CERAMIC CHIP	0.01uF	10%	25V
C1225	1-162-964-11	CERAMIC CHIP	0.001uF	10%	50V
C1226	1-162-964-11	CERAMIC CHIP	0.001uF	10%	50V
C1233	1-162-968-11	CERAMIC CHIP	0.0047uF	10%	50V
C1701	1-162-923-11	CERAMIC CHIP	47PF	5%	50V
C1702	1-165-908-11	CERAMIC CHIP	1uF	10%	10V
C1703	1-127-956-21	FILM CHIP	0.1uF	5%	16V
C1704	1-127-956-21	FILM CHIP	0.1uF	5%	16V
C1705	1-127-956-21	FILM CHIP	0.1uF	5%	16V
C1706	1-100-390-21	ELECT CHIP	180uF	20%	6.3V
C1725	1-162-970-11	CERAMIC CHIP	0.01uF	10%	25V
C1727	1-162-970-11	CERAMIC CHIP	0.01uF	10%	25V
C1728	1-128-994-21	ELECT CHIP	47uF	20%	10V
C1729	1-127-715-11	CERAMIC CHIP	0.22uF	10%	16V
C1730	1-127-715-11	CERAMIC CHIP	0.22uF	10%	16V
C1801	1-162-923-11	CERAMIC CHIP	47PF	5%	50V
C1802	1-162-923-11	CERAMIC CHIP	47PF	5%	50V
C2100	1-162-970-11	CERAMIC CHIP	0.01uF	10%	25V

MAIN

Ref. No.	Part No.	Description			Remark
C2108	1-127-760-11	CERAMIC CHIP	4.7uF	10%	6.3V
C2109	1-126-916-11	ELECT	1000uF	20%	6.3V
C2110	1-126-916-11	ELECT	1000uF	20%	6.3V
C2114	1-107-826-11	CERAMIC CHIP	0.1uF	10%	16V
C2115	1-165-989-11	CERAMIC CHIP	10uF	10%	6.3V
C2116	1-107-826-11	CERAMIC CHIP	0.1uF	10%	16V
C2117	1-165-989-11	CERAMIC CHIP	10uF	10%	6.3V
C2118	1-107-826-11	CERAMIC CHIP	0.1uF	10%	16V
C2119	1-162-964-11	CERAMIC CHIP	0.001uF	10%	50V
C2130	1-162-970-11	CERAMIC CHIP	0.01uF	10%	25V
C2502	1-164-172-11	CERAMIC CHIP	0.0056uF	10%	25V
C2503	1-127-760-11	CERAMIC CHIP	4.7uF	10%	6.3V
C9972	1-107-826-11	CERAMIC CHIP	0.1uF	10%	16V
		< CONNECTOR >			
CN501	1-785-468-41	CONNECTOR, FFC/FPC 13P			
CN502	1-820-117-41	CONNECTOR, FFC/FPC 19P			
CN504	1-817-199-51	CONNECTOR, FFC/FPC 9P			
* CN506	1-691-772-11	PLUG (MICRO CONNECTOR) 10P			
CN1101	1-815-763-32	CONNECTOR, FFC/FPC 24P			
* CN1105	1-564-708-11	PIN, CONNECTOR (SMALL TYPE) 6P			
CN1110	1-785-468-41	CONNECTOR, FFC/FPC 13P			
CN1201	1-779-977-11	PIN, CONNECTOR 6P			
CN1202	1-784-922-11	PIN, CONNECTOR 5P			
CN1701	1-820-735-31	HDMI CONNECTOR (HDMI OUT)			
CN1801	1-779-978-11	PIN, CONNECTOR 3P			
		< DIODE >			
D501	6-501-817-01	DIODE	MA2J1110GLS0		
D502	6-500-334-01	DIODE	MC2836-T112-1		
D505	6-500-334-01	DIODE	MC2836-T112-1		
D691	6-501-817-01	DIODE	MA2J1110GLS0 (US, CND)		
D692	8-719-075-86	DIODE	SID307BRTP19 (US, CND)		
D693	6-501-817-01	DIODE	MA2J1110GLS0 (US, CND)		
D1801	6-501-817-01	DIODE	MA2J1110GLS0		
D1802	6-501-817-01	DIODE	MA2J1110GLS0		
D9712	6-501-817-01	DIODE	MA2J1110GLS0		
		< GROUND TERMINAL >			
EB501	1-537-770-21	TERMINAL BOARD, GROUND			
EB502	1-537-770-21	TERMINAL BOARD, GROUND			
EB503	1-780-318-11	TERMINAL			
		< FERRITE BEAD >			
FB505	1-469-324-21	FERRITE, EMI (SMD) (2012)			
FB508	1-469-324-21	FERRITE, EMI (SMD) (2012)			
FB510	1-469-324-21	FERRITE, EMI (SMD) (2012)			
FB1106	1-469-324-21	FERRITE, EMI (SMD) (2012)			
FB1107	1-469-324-21	FERRITE, EMI (SMD) (2012)			
FB1108	1-469-324-21	FERRITE, EMI (SMD) (2012)			
FB1109	1-469-324-21	FERRITE, EMI (SMD) (2012)			
FB1111	1-469-670-21	FERRITE, EMI (SMD) (2012)			
FB1112	1-469-670-21	FERRITE, EMI (SMD) (2012)			
FB1113	1-469-670-21	FERRITE, EMI (SMD) (2012)			
FB1115	1-469-670-21	FERRITE, EMI (SMD) (2012)			
FB1116	1-469-670-21	FERRITE, EMI (SMD) (2012)			
FB1117	1-469-670-21	FERRITE, EMI (SMD) (2012)			
FB1118	1-469-670-21	FERRITE, EMI (SMD) (2012)			
FB2101	1-469-324-21	FERRITE, EMI (SMD) (2012)			
FB2103	1-469-324-21	FERRITE, EMI (SMD) (2012)			

Ref. No.	Part No.	Description			Remark
		< IC >			
IC501	A-1567-243-A	IC R5F3640DDFAR (for SERVICE)			
IC503	6-708-922-01	IC PST3635NR			
IC504	6-712-613-01	IC SI-3010KM-TLS			
IC505	6-712-613-01	IC SI-3010KM-TLS			
IC506	6-712-613-01	IC SI-3010KM-TLS			
IC692	8-759-675-54	IC TC7W53FK (TE85R) (US, CND)			
IC693	6-600-349-21	IC NJL23H400A (US, CND)			
IC1101	6-711-953-01	IC CXD9927R			
IC1102	6-808-155-01	IC S29AL032D70TF-SCD-0801			
IC1103	(Not supplied)	IC S-24CS64A01-J8T1G			
IC1104	6-707-897-01	IC EDS6416AHTA-75-E			
IC1105	6-702-302-01	IC TK11133CSCL-G			
IC1107	6-702-302-01	IC TK11133CSCL-G			
IC1110	6-707-739-01	IC MM1661JTRE			
IC1201	6-704-524-01	IC FAN8036L			
IC1701	6-600-461-11	IC TOTX147L (R) (DIGITAL OUT(CD) OPTICAL)			
IC1702	8-759-058-62	IC TC7S08FU (TE85R)			
IC1703	8-759-058-62	IC TC7S08FU (TE85R)			
IC1705	8-759-592-47	IC TC7SZ08FU (TE85R)			
IC1707	6-705-337-01	IC TK11150CSCL-G			
IC1901	6-700-596-01	IC TC74LVX4053FT (EL)			
		< JACK >			
J691	1-563-330-31	JACK (IR REMOTE IN) (US, CND)			
J1701	1-818-300-11	JACK, PIN 1P (DIGITAL OUT(CD) COAXIAL)			
		< COIL >			
* L1701	1-813-308-11	COMMON MODE CHOKE			
* L1702	1-813-308-11	COMMON MODE CHOKE			
* L1703	1-813-308-11	COMMON MODE CHOKE			
* L1704	1-813-308-11	COMMON MODE CHOKE			
L1705	1-416-701-11	COIL (WITH CORE)			
L1801	1-410-997-42	INDUCTOR	2.2uH		
		< TRANSISTOR >			
Q503	8-729-620-07	TRANSISTOR	2SC3052EF-T1-LEF		
Q1101	6-550-008-01	TRANSISTOR	UM6K1N-TN		
Q1102	6-550-653-01	TRANSISTOR	QST8TR		
Q1103	8-729-027-52	TRANSISTOR	DTC124EKA-T146		
Q1105	8-729-028-27	FET	2SK2009 (TE85L)		
Q1701	6-550-008-01	TRANSISTOR	UM6K1N-TN		
Q9724	6-551-699-01	TRANSISTOR	ISA1602AM1TP-1EF		
Q9726	8-729-620-13	TRANSISTOR	2SC4154TP-1EF		
Q9728	8-729-620-13	TRANSISTOR	2SC4154TP-1EF		
Q9729	8-729-027-43	TRANSISTOR	DTC114EKA-T146		
		< RESISTOR >			
R501	1-216-857-11	METAL CHIP	1M	5%	1/10W
R504	1-216-833-11	METAL CHIP	10K	5%	1/10W
R506	1-216-833-11	METAL CHIP	10K	5%	1/10W
R508	1-216-864-11	SHORT CHIP	0 (AEP)		
R509	1-216-809-11	METAL CHIP	100	5%	1/10W
R510	1-216-833-11	METAL CHIP	10K	5%	1/10W
R511	1-216-821-11	METAL CHIP	1K	5%	1/10W
R512	1-216-833-11	METAL CHIP	10K	5%	1/10W
R513	1-216-821-11	METAL CHIP	1K	5%	1/10W
R514	1-216-833-11	METAL CHIP	10K	5%	1/10W

Note: IC1103 cannot exchange with single. When this part is damaged, exchange the entire mounted board.

Ref. No.	Part No.	Description			Remark
R515	1-216-833-11	METAL CHIP	10K	5%	1/10W
R516	1-216-833-11	METAL CHIP	10K	5%	1/10W
R517	1-216-833-11	METAL CHIP	10K	5%	1/10W
R518	1-216-833-11	METAL CHIP	10K	5%	1/10W
R519	1-216-833-11	METAL CHIP	10K	5%	1/10W
R520	1-216-833-11	METAL CHIP	10K	5%	1/10W
R521	1-216-833-11	METAL CHIP	10K	5%	1/10W
R522	1-216-833-11	METAL CHIP	10K	5%	1/10W
R523	1-216-833-11	METAL CHIP	10K	5%	1/10W
R524	1-216-833-11	METAL CHIP	10K	5%	1/10W
R525	1-216-833-11	METAL CHIP	10K	5%	1/10W
R526	1-216-809-11	METAL CHIP	100	5%	1/10W
R527	1-216-833-11	METAL CHIP	10K	5%	1/10W
R528	1-216-833-11	METAL CHIP	10K	5%	1/10W
R529	1-216-821-11	METAL CHIP	1K	5%	1/10W
R530	1-216-809-11	METAL CHIP	100	5%	1/10W
R531	1-216-833-11	METAL CHIP	10K	5%	1/10W
R532	1-216-821-11	METAL CHIP	1K	5%	1/10W
R533	1-216-809-11	METAL CHIP	100	5%	1/10W
R534	1-216-833-11	METAL CHIP	10K	5%	1/10W
R535	1-216-809-11	METAL CHIP	100	5%	1/10W
R536	1-216-864-11	SHORT CHIP	0		
R538	1-216-857-11	METAL CHIP	1M	5%	1/10W
R539	1-216-833-11	METAL CHIP	10K	5%	1/10W
R540	1-216-833-11	METAL CHIP	10K	5%	1/10W
R542	1-216-833-11	METAL CHIP	10K	5%	1/10W
R543	1-216-833-11	METAL CHIP	10K	5%	1/10W
R544	1-216-833-11	METAL CHIP	10K	5%	1/10W
R545	1-216-833-11	METAL CHIP	10K	5%	1/10W
R546	1-216-833-11	METAL CHIP	10K	5%	1/10W
R551	1-216-809-11	METAL CHIP	100	5%	1/10W
R556	1-216-841-11	METAL CHIP	47K	5%	1/10W
R557	1-216-841-11	METAL CHIP	47K	5%	1/10W
R558	1-216-833-11	METAL CHIP	10K	5%	1/10W
R559	1-216-833-11	METAL CHIP	10K	5%	1/10W
R560	1-216-841-11	METAL CHIP	47K	5%	1/10W
R561	1-216-845-11	METAL CHIP	100K	5%	1/10W
R562	1-216-841-11	METAL CHIP	47K	5%	1/10W
R563	1-216-833-11	METAL CHIP	10K	5%	1/10W
R564	1-216-809-11	METAL CHIP	100	5%	1/10W
R565	1-216-809-11	METAL CHIP	100	5%	1/10W
R566	1-216-809-11	METAL CHIP	100	5%	1/10W
R567	1-216-809-11	METAL CHIP	100	5%	1/10W
R568	1-216-809-11	METAL CHIP	100	5%	1/10W
R569	1-216-809-11	METAL CHIP	100	5%	1/10W
R570	1-216-841-11	METAL CHIP	47K	5%	1/10W
R574	1-216-864-11	SHORT CHIP	0		
R579	1-216-809-11	METAL CHIP	100	5%	1/10W
R580	1-216-809-11	METAL CHIP	100	5%	1/10W
R581	1-216-809-11	METAL CHIP	100	5%	1/10W
R582	1-216-833-11	METAL CHIP	10K	5%	1/10W
R583	1-218-871-11	METAL CHIP	10K	0.5%	1/10W
R584	1-218-873-11	METAL CHIP	12K	0.5%	1/10W
R585	1-218-891-11	METAL CHIP	68K	0.5%	1/10W
R586	1-216-821-11	METAL CHIP	1K	5%	1/10W
R587	1-218-871-11	METAL CHIP	10K	0.5%	1/10W
R588	1-218-883-11	METAL CHIP	33K	0.5%	1/10W
R589	1-218-867-11	METAL CHIP	6.8K	0.5%	1/10W
R590	1-216-821-11	METAL CHIP	1K	5%	1/10W
R592	1-216-864-11	SHORT CHIP	0		

Ref. No.	Part No.	Description			Remark
R596	1-218-871-11	METAL CHIP	10K	0.5%	1/10W
R597	1-218-879-11	METAL CHIP	22K	0.5%	1/10W
R598	1-218-851-11	METAL CHIP	1.5K	0.5%	1/10W
R599	1-216-821-11	METAL CHIP	1K	5%	1/10W
R601	1-216-809-11	METAL CHIP	100	5%	1/10W
R602	1-216-809-11	METAL CHIP	100	5%	1/10W
R603	1-216-864-11	SHORT CHIP	0		
R604	1-216-864-11	SHORT CHIP	0		
R650	1-216-809-11	METAL CHIP	100	5%	1/10W
R691	1-216-833-11	METAL CHIP	10K	5%	1/10W (US, CND)
R692	1-216-797-11	METAL CHIP	10	5%	1/10W (US, CND)
R693	1-216-845-11	METAL CHIP	100K	5%	1/10W (US, CND)
R694	1-216-833-11	METAL CHIP	10K	5%	1/10W (US, CND)
R695	1-216-845-11	METAL CHIP	100K	5%	1/10W (US, CND)
R696	1-216-809-11	METAL CHIP	100	5%	1/10W (US, CND)
R697	1-216-809-11	METAL CHIP	100	5%	1/10W (US, CND)
R1101	1-216-809-11	METAL CHIP	100	5%	1/10W
R1102	1-216-864-11	SHORT CHIP	0		
R1103	1-218-864-11	METAL CHIP	5.1K	0.5%	1/10W
R1105	1-216-833-11	METAL CHIP	10K	5%	1/10W
R1106	1-216-833-11	METAL CHIP	10K	5%	1/10W
R1107	1-216-833-11	METAL CHIP	10K	5%	1/10W
R1108	1-216-857-11	METAL CHIP	1M	5%	1/10W
R1109	1-216-864-11	SHORT CHIP	0		
R1110	1-216-841-11	METAL CHIP	47K	5%	1/10W
R1111	1-216-809-11	METAL CHIP	100	5%	1/10W
R1112	1-211-977-11	METAL CHIP	22	0.5%	1/10W
R1113	1-211-977-11	METAL CHIP	22	0.5%	1/10W
R1114	1-216-845-11	METAL CHIP	100K	5%	1/10W
R1115	1-211-977-11	METAL CHIP	22	0.5%	1/10W
R1116	1-216-821-11	METAL CHIP	1K	5%	1/10W
R1117	1-216-841-11	METAL CHIP	47K	5%	1/10W
R1118	1-216-801-11	METAL CHIP	22	5%	1/10W
R1120	1-216-801-11	METAL CHIP	22	5%	1/10W
R1121	1-216-801-11	METAL CHIP	22	5%	1/10W
R1123	1-216-864-11	SHORT CHIP	0		
R1124	1-216-841-11	METAL CHIP	47K	5%	1/10W
R1125	1-216-805-11	METAL CHIP	47	5%	1/10W
R1126	1-216-805-11	METAL CHIP	47	5%	1/10W
R1128	1-216-805-11	METAL CHIP	47	5%	1/10W
R1132	1-216-845-11	METAL CHIP	100K	5%	1/10W
R1133	1-216-864-11	SHORT CHIP	0		
R1135	1-216-821-11	METAL CHIP	1K	5%	1/10W
R1136	1-216-835-11	METAL CHIP	15K	5%	1/10W
R1137	1-216-833-11	METAL CHIP	10K	5%	1/10W
R1138	1-216-833-11	METAL CHIP	10K	5%	1/10W
R1139	1-216-864-11	SHORT CHIP	0		
R1140	1-216-821-11	METAL CHIP	1K	5%	1/10W
R1141	1-216-855-11	METAL CHIP	680K	5%	1/10W
R1142	1-216-809-11	METAL CHIP	100	5%	1/10W
R1143	1-216-805-11	METAL CHIP	47	5%	1/10W
R1145	1-216-864-11	SHORT CHIP	0		
R1146	1-216-805-11	METAL CHIP	47	5%	1/10W
R1147	1-216-864-11	SHORT CHIP	0		
R1148	1-216-864-11	SHORT CHIP	0		

MAIN

Ref. No.	Part No.	Description			Remark
R1151	1-216-833-11	METAL CHIP	10K	5%	1/10W
R1152	1-216-864-11	SHORT CHIP	0		
R1153	1-216-864-11	SHORT CHIP	0		
R1154	1-216-864-11	SHORT CHIP	0		
R1155	1-216-864-11	SHORT CHIP	0		
R1156	1-216-809-11	METAL CHIP	100	5%	1/10W
R1159	1-216-833-11	METAL CHIP	10K	5%	1/10W
R1160	1-216-805-11	METAL CHIP	47	5%	1/10W
R1161	1-216-805-11	METAL CHIP	47	5%	1/10W
R1175	1-216-864-11	SHORT CHIP	0		
R1185	1-216-805-11	METAL CHIP	47	5%	1/10W
R1186	1-216-833-11	METAL CHIP	10K	5%	1/10W
R1191	1-216-821-11	METAL CHIP	1K	5%	1/10W
R1193	1-216-821-11	METAL CHIP	1K	5%	1/10W
R1198	1-216-809-11	METAL CHIP	100	5%	1/10W
R1204	1-216-822-11	METAL CHIP	1.2K	5%	1/10W
R1205	1-216-833-11	METAL CHIP	10K	5%	1/10W
R1206	1-216-833-11	METAL CHIP	10K	5%	1/10W
R1207	1-216-826-11	METAL CHIP	2.7K	5%	1/10W
R1208	1-216-839-11	METAL CHIP	33K	5%	1/10W
R1209	1-216-839-11	METAL CHIP	33K	5%	1/10W
R1210	1-216-841-11	METAL CHIP	47K	5%	1/10W
R1212	1-216-833-11	METAL CHIP	10K	5%	1/10W
R1213	1-218-867-11	METAL CHIP	6.8K	0.5%	1/10W
R1214	1-216-835-11	METAL CHIP	15K	5%	1/10W
R1215	1-216-834-11	METAL CHIP	12K	5%	1/10W
R1216	1-216-834-11	METAL CHIP	12K	5%	1/10W
R1219	1-216-838-11	METAL CHIP	27K	5%	1/10W
R1220	1-216-821-11	METAL CHIP	1K	5%	1/10W
R1221	1-218-889-11	METAL CHIP	56K	0.5%	1/10W
R1223	1-218-895-11	METAL CHIP	100K	0.5%	1/10W
R1224	1-216-833-11	METAL CHIP	10K	5%	1/10W
R1225	1-218-895-11	METAL CHIP	100K	0.5%	1/10W
R1226	1-218-889-11	METAL CHIP	56K	0.5%	1/10W
R1229	1-216-834-11	METAL CHIP	12K	5%	1/10W
R1230	1-218-893-11	METAL CHIP	82K	0.5%	1/10W
R1231	1-218-875-11	METAL CHIP	15K	0.5%	1/10W
R1232	1-218-877-11	METAL CHIP	18K	0.5%	1/10W
R1233	1-218-883-11	METAL CHIP	33K	0.5%	1/10W
R1234	1-216-833-11	METAL CHIP	10K	5%	1/10W
R1236	1-216-821-11	METAL CHIP	1K	5%	1/10W
R1237	1-216-821-11	METAL CHIP	1K	5%	1/10W
R1238	1-216-821-11	METAL CHIP	1K	5%	1/10W
R1239	1-216-821-11	METAL CHIP	1K	5%	1/10W
R1243	1-216-805-11	METAL CHIP	47	5%	1/10W
R1246	1-216-829-11	METAL CHIP	4.7K	5%	1/10W
R1247	1-216-821-11	METAL CHIP	1K	5%	1/10W
R1254	1-216-833-11	METAL CHIP	10K	5%	1/10W
R1701	1-218-285-11	METAL CHIP	75	5%	1/10W
R1702	1-216-801-11	METAL CHIP	22	5%	1/10W
R1730	1-216-826-11	METAL CHIP	2.7K	5%	1/10W
R1742	1-216-841-11	METAL CHIP	47K	5%	1/10W
R1744	1-216-829-11	METAL CHIP	4.7K	5%	1/10W
R1746	1-216-864-11	SHORT CHIP	0		
R1747	1-216-864-11	SHORT CHIP	0		
R1748	1-216-864-11	SHORT CHIP	0		
R1749	1-216-824-11	METAL CHIP	1.8K	5%	1/10W
R1750	1-216-824-11	METAL CHIP	1.8K	5%	1/10W
R1751	1-216-864-11	SHORT CHIP	0		
R1752	1-216-864-11	SHORT CHIP	0		

Ref. No.	Part No.	Description			Remark
R1753	1-216-864-11	SHORT CHIP	0		
R1754	1-216-864-11	SHORT CHIP	0		
R1757	1-216-864-11	SHORT CHIP	0		
R1781	1-216-827-11	METAL CHIP	3.3K	5%	1/10W
R1782	1-216-827-11	METAL CHIP	3.3K	5%	1/10W
R1783	1-216-864-11	SHORT CHIP	0		
R1784	1-216-864-11	SHORT CHIP	0		
R1785	1-216-864-11	SHORT CHIP	0		
R1786	1-216-864-11	SHORT CHIP	0		
R1801	1-211-990-11	METAL CHIP	75	0.5%	1/10W
R2101	1-218-841-11	METAL CHIP	560	0.5%	1/10W
R2110	1-216-826-11	METAL CHIP	2.7K	5%	1/10W
R2114	1-216-801-11	METAL CHIP	22	5%	1/10W
R2115	1-216-864-11	SHORT CHIP	0		
R2119	1-216-864-11	SHORT CHIP	0		
R2129	1-216-845-11	METAL CHIP	100K	5%	1/10W
R2133	1-216-864-11	SHORT CHIP	0		
R2134	1-216-864-11	SHORT CHIP	0		
R2150	1-216-827-11	METAL CHIP	3.3K	5%	1/10W
R2151	1-216-827-11	METAL CHIP	3.3K	5%	1/10W
R2152	1-216-827-11	METAL CHIP	3.3K	5%	1/10W
R2155	1-216-833-11	METAL CHIP	10K	5%	1/10W
R2156	1-216-833-11	METAL CHIP	10K	5%	1/10W
R2157	1-216-833-11	METAL CHIP	10K	5%	1/10W
R2158	1-216-833-11	METAL CHIP	10K	5%	1/10W
R2159	1-216-833-11	METAL CHIP	10K	5%	1/10W
R2160	1-216-833-11	METAL CHIP	10K	5%	1/10W
R2176	1-216-864-11	SHORT CHIP	0		
R2177	1-216-864-11	SHORT CHIP	0		
R2178	1-216-821-11	METAL CHIP	1K	5%	1/10W
R2180	1-216-833-11	METAL CHIP	10K	5%	1/10W
R2184	1-216-809-11	METAL CHIP	100	5%	1/10W
R2185	1-216-809-11	METAL CHIP	100	5%	1/10W
R2187	1-216-805-11	METAL CHIP	47	5%	1/10W
R2200	1-216-833-11	METAL CHIP	10K	5%	1/10W
R9918	1-216-821-11	METAL CHIP	1K	5%	1/10W
R9920	1-216-864-11	SHORT CHIP	0		
R9922	1-216-833-11	METAL CHIP	10K	5%	1/10W
R9924	1-216-821-11	METAL CHIP	1K	5%	1/10W
R9928	1-216-837-11	METAL CHIP	22K	5%	1/10W
R9929	1-216-837-11	METAL CHIP	22K	5%	1/10W
R9934	1-216-833-11	METAL CHIP	10K	5%	1/10W
R9935	1-216-864-11	SHORT CHIP	0		
R9941	1-216-838-11	METAL CHIP	27K	5%	1/10W
R9945	1-216-813-11	METAL CHIP	220	5%	1/10W
		< COMPOSITION CIRCUIT BLOCK >			
RB1103	1-234-400-21	CONDUCTOR, NETWORK (1005X4)			
RB1104	1-234-400-21	CONDUCTOR, NETWORK (1005X4)			
RB1105	1-234-944-21	RES, NETWORK 47 (1005X4)			
RB1106	1-234-944-21	RES, NETWORK 47 (1005X4)			
RB1107	1-234-400-21	CONDUCTOR, NETWORK (1005X4)			
RB1108	1-234-400-21	CONDUCTOR, NETWORK (1005X4)			
RB1109	1-234-400-21	CONDUCTOR, NETWORK (1005X4)			
RB1110	1-234-400-21	CONDUCTOR, NETWORK (1005X4)			
RB1111	1-234-400-21	CONDUCTOR, NETWORK (1005X4)			
RB1112	1-234-400-21	CONDUCTOR, NETWORK (1005X4)			
RB1113	1-234-400-21	CONDUCTOR, NETWORK (1005X4)			
RB1114	1-234-400-21	CONDUCTOR, NETWORK (1005X4)			
RB1115	1-234-400-21	CONDUCTOR, NETWORK (1005X4)			

Ref. No.	Part No.	Description				Remark
		< SWITCH >				
S501	1-692-991-11	SWITCH, SLIDE (DIGITAL OUT(CD))				
S502	1-692-991-11	SWITCH, SLIDE (HDMI PRIORITY)				
		< VIBRATOR >				
X501	1-795-121-21	VIBRATOR, CERAMIC (5MHz)				
**********						
		MOTOR BOARD				
		**********				
		< CONNECTOR >				
CN010	1-564-721-11	PIN, CONNECTOR (SMALL TYPE) 5P				
CN011	1-506-481-11	PIN, CONNECTOR 2P				
		< SWITCH >				
SW010	1-572-086-11	SWITCH, LEAF (CHUCKING)				
**********						
		OUT-SW BOARD				
		**********				
		< SWITCH >				
SW011	1-762-424-11	SWITCH, MICRO (DISC IN/OUT)				
**********						
	A-1544-253-A	POWER BOARD, COMPLETE (US, CND)				
	A-1560-484-A	POWER BOARD, COMPLETE (AEP)				
		**********				
		< CAPACITOR >				
C101	1-128-576-11	ELECT	100uF	20%	63V	
C102	1-126-767-11	ELECT	1000uF	20%	16V	
C103	1-112-425-11	ELECT	6800uF	20%	25V	
C104	1-107-887-31	ELECT	10000uF	20%	16V	
C105	1-107-887-31	ELECT	10000uF	20%	16V	
C106	1-112-093-11	ELECT	2200uF	20%	25V	
C107	1-112-094-11	ELECT	2200uF	20%	35V	
C108	1-112-094-11	ELECT	2200uF	20%	35V	
C109	1-126-925-91	ELECT	470uF	20%	10V	
C110	1-126-964-11	ELECT	10uF	20%	50V	
C111	1-137-150-11	FILM	0.01uF	5%	100V	
C112	1-137-150-11	FILM	0.01uF	5%	100V	
C113	1-137-150-11	FILM	0.01uF	5%	100V	
C114	1-112-093-11	ELECT	2200uF	20%	25V	
C115	1-128-339-31	ELECT	2200uF	20%	16V	
C116	1-128-339-31	ELECT	2200uF	20%	16V	
C117	1-124-703-51	ELECT	2200uF	20%	25V	
C118	1-124-703-51	ELECT	2200uF	20%	25V	
C119	1-124-703-51	ELECT	2200uF	20%	25V	
		< CONNECTOR >				
CN101	1-691-770-21	PLUG (MICRO CONNECTOR) 8P				
CN102	1-691-769-11	PLUG (MICRO CONNECTOR) 7P				
CN103	1-784-922-11	PIN, CONNECTOR 5P				
* CN104	1-691-772-11	PLUG (MICRO CONNECTOR) 10P				
CN105	1-691-770-11	PLUG (MICRO CONNECTOR) 8P				
CN106	1-784-921-11	PIN, CONNECTOR 4P				

Ref. No.	Part No.	Description				Remark
		< DIODE >				
D101	8-719-210-33	DIODE EC10DS2				
D102	8-719-210-33	DIODE EC10DS2				
D103	8-719-210-33	DIODE EC10DS2				
D104	8-719-210-33	DIODE EC10DS2				
D105	8-719-210-39	DIODE EC10QS-04				
D106	8-719-210-39	DIODE EC10QS-04				
D107	8-719-210-39	DIODE EC10QS-04				
D108	8-719-210-39	DIODE EC10QS-04				
D109	8-719-210-39	DIODE EC10QS-04				
D110	8-719-210-39	DIODE EC10QS-04				
D111	8-719-210-39	DIODE EC10QS-04				
D112	8-719-210-39	DIODE EC10QS-04				
D113	8-719-210-39	DIODE EC10QS-04				
D114	8-719-210-39	DIODE EC10QS-04				
D115	8-719-210-39	DIODE EC10QS-04				
D116	8-719-210-39	DIODE EC10QS-04				
D117	8-719-210-39	DIODE EC10QS-04				
D118	8-719-210-39	DIODE EC10QS-04				
D119	8-719-210-39	DIODE EC10QS-04				
D120	8-719-210-39	DIODE EC10QS-04				
D121	8-719-210-39	DIODE EC10QS-04				
D122	8-719-210-39	DIODE EC10QS-04				
D123	8-719-210-39	DIODE EC10QS-04				
D124	8-719-210-39	DIODE EC10QS-04				
D125	8-719-210-39	DIODE EC10QS-04				
D126	8-719-210-39	DIODE EC10QS-04				
D127	8-719-210-39	DIODE EC10QS-04				
D128	8-719-210-39	DIODE EC10QS-04				
D129	8-719-083-70	DIODE UDZSNPTE-1727B				
D130	8-719-069-54	DIODE UDZSNPTE-175.1B				
		< IC >				
IC101	8-759-390-48	IC uPC2406AHF				
IC102	8-759-473-41	IC BA10T				
IC103	6-708-659-01	IC BA00BC0WT-V5				
IC104	8-759-390-48	IC uPC2406AHF				
IC105	8-759-450-47	IC BA05T				
IC106	6-713-034-01	IC KIA7812API-U/PF				
IC107	6-712-106-01	IC KIA7912PI				
		< TRANSISTOR >				
Q101	8-729-230-27	TRANSISTOR 2SA1213Y-TE12L				
		< RESISTOR >				
R101	1-249-429-11	CARBON	10K	5%	1/4W	
R102	1-249-429-11	CARBON	10K	5%	1/4W	
R103	1-247-843-11	CARBON	3.3K	5%	1/4W	
R104	1-247-807-31	CARBON	100	5%	1/4W	
R105	1-247-807-31	CARBON	100	5%	1/4W	
R106	1-247-863-91	CARBON	22K	5%	1/4W	
R107	1-247-883-00	CARBON	150K	5%	1/4W	
R108	1-249-439-11	CARBON	68K	5%	1/4W	
		< THERMISTOR >				
⚠ TH101	1-803-988-11	THERMISTOR, POSITIVE				
⚠ TH102	1-803-988-11	THERMISTOR, POSITIVE				
⚠ TH103	1-804-046-21	THERMISTOR, POSITIVE (RXE030) (AEP)				
**********						

STANDBY

Ref. No.	Part No.	Description				Remark
	A-1544-254-A	STANDBY BOARD, COMPLETE (US, CND)				
	A-1544-320-A	STANDBY BOARD, COMPLETE (AEP)				
		**********				
	7-685-646-79	SCREW +BVTP 3X8 TYPE2 IT-3				
		< CAPACITOR >				
C51	1-126-964-11	ELECT	10uF	20%	50V	
⚠ C52	1-112-887-51	CERAMIC	0.01uF	20%	250V	
C53	1-126-943-11	ELECT	2200uF	20%	25V	
C54	1-164-315-11	CERAMIC CHIP	470PF	5%	50V	
C55	1-136-287-11	FILM	0.0047uF	5%	100V	
C56	1-137-465-11	MYLAR	0.056uF	5%	100V	
C57	1-126-941-11	ELECT	470uF	20%	25V	
C58	1-100-566-91	CERAMIC CHIP	0.1uF	10%	25V	
⚠ C59	1-112-887-51	CERAMIC	0.01uF	20%	250V	
C60	1-126-941-11	ELECT	470uF	20%	25V	
		< CONNECTOR >				
CN001	1-784-921-11	PIN, CONNECTOR 4P				
CN002	1-770-128-11	PIN, CONNECTOR (3.96mm PITCH) 2P				
CN003	1-564-321-00	PIN, CONNECTOR (3.96mm PITCH) 2P				
* CN004	1-564-321-21	PIN, CONNECTOR (3.96mm PITCH) 2P				
		< DIODE >				
D52	8-719-210-21	DIODE 11EQS04				
D53	8-719-210-21	DIODE 11EQS04				
D54	8-719-210-21	DIODE 11EQS04				
D55	8-719-210-21	DIODE 11EQS04				
D56	8-719-991-33	DIODE 1SS133T-77				
D57	8-719-991-33	DIODE 1SS133T-77				
D58	8-719-991-33	DIODE 1SS133T-77				
		< EARTH TERMINAL >				
* EE51	1-537-738-21	TERMINAL, EARTH				
		< FUSE HOLDER >				
FH01	1-533-233-11	FUSE HOLDER				
FH02	1-533-233-11	FUSE HOLDER				
FH03	1-533-233-11	FUSE HOLDER				
FH04	1-533-233-11	FUSE HOLDER				
		< IC >				
IC51	8-759-450-47	IC BA05T				
IC52	6-708-659-01	IC BA00BC0WT-V5				
		< COIL >				
⚠ L51	1-421-915-11	COIL, LINE FILTER				
		< TRANSISTOR >				
Q51	8-729-119-78	TRANSISTOR	2SC2785-HFE			
Q52	8-729-119-78	TRANSISTOR	2SC2785-HFE			
		< RESISTOR >				
R51	1-249-429-11	CARBON	10K	5%	1/4W	
R52	1-249-427-11	CARBON	6.8K	5%	1/4W	
R53	1-247-863-91	CARBON	22K	5%	1/4W	
R54	1-249-421-11	CARBON	2.2K	5%	1/4W	
R55	1-249-429-11	CARBON	10K	5%	1/4W	
R56	1-247-883-00	CARBON	150K	5%	1/4W	
R57	1-249-439-11	CARBON	68K	5%	1/4W	
⚠ R60	1-249-389-91	CARBON	4.7	5%	1/4W	F
R61	1-249-415-11	CARBON	680	5%	1/4W	
		< RELAY >				
⚠ RY01	1-755-266-11	RELAY, AC POWER				
		< TRANSFORMER >				
⚠ T002	1-445-518-11	POWER SOURCE TRANSFORMER (US, CND)				
⚠ T002	1-445-519-11	POWER SOURCE TRANSFORMER (AEP)				
		< THERMISTOR >				
⚠ TH50	1-804-046-21	THERMISTOR, POSITIVE (RXE030)				
		**********				
		MISCELLANEOUS				
		**********				
59	1-835-567-51	WIRE (FLAT TYPE) (19 CORE)				
154	1-828-326-51	WIRE (FLAT TYPE) (13 CORE)				
⚠ 204	1-821-082-41	AC INLET (2P) (～AC IN)				
⚠ 552	8-820-322-04	OPTICAL PICK-UP BLOCK (KHM-313CAB/C2RP)				
555	1-835-373-51	WIRE (FLAT TYPE) (24 CORE)				
⚠ F001	1-532-389-33	FUSE (T500mA/250V) (AEP)				
⚠ F001	1-532-501-33	FUSE (T800mA/250V) (US, CND)				
⚠ F002	1-532-389-33	FUSE (T500mA/250V) (AEP)				
⚠ F002	1-532-501-33	FUSE (T800mA/250V) (US, CND)				
M001	A-4604-363-A	MOTOR (L) ASSY (LOADING)				
⚠ PT002	1-445-487-11	TRANSFORMER, POWER (US, CND)				
⚠ PT002	1-445-488-11	TRANSFORMER, POWER (AEP)				
⚠ PT003	1-445-483-11	TRANSFORMER, POWER (US, CND)				
⚠ PT003	1-445-484-11	TRANSFORMER, POWER (AEP)				
		**********				
		ACCESSORIES				
		**********				
	1-480-856-11	REMOTE COMMANDER (RM-ASU042)				
	1-791-732-12	CORD, CONNECTION (Audio connecting cord (Red and White plugs))				
⚠	1-824-964-13	CORD, POWER (US, CND)				
⚠	1-831-474-11	CORD, POWER (AEP)				
	4-000-691-11	MANUAL, INSTRUCTION (ENGLISH, FRENCH)				
	4-000-691-21	MANUAL, INSTRUCTION (SPANISH, GERMAN) (AEP)				
	4-000-691-31	MANUAL, INSTRUCTION (DUTCH, ITALIAN) (AEP)				
	4-000-691-41	MANUAL, INSTRUCTION (SPANISH, POLISH) (AEP)				
	4-000-691-51	MANUAL, INSTRUCTION (DANISH, FINNISH) (AEP)				
	4-000-691-61	MANUAL, INSTRUCTION (PORTUGUESE) (AEP)				
	4-000-691-71	MANUAL, INSTRUCTION (RUSSIAN) (AEP)				
	4-000-692-11	MANUAL, INSTRUCTION (GREEK) (AEP)				
	4-000-692-21	MANUAL, INSTRUCTION (HUNGARIAN, CZECH) (AEP)				
	4-000-692-31	MANUAL, INSTRUCTION (TURKISH) (AEP)				
	4-000-692-41	MANUAL, INSTRUCTION (SLOVAKIAN) (AEP)				

Note: If wire (flat type) is replaced, install it after bending it in the same form as that before replacement.

MEMO

REVISION HISTORY

Checking the version allows you to jump to the revised page.
Also, clicking the version at the top of the revised page allows you to jump to the next revised page.

Ver.	Date	Description of Revision
1.0	2008.08	New