SERVICE MANUAL

MODEL	DEST.	MODEL	DEST.
VPL-HS1	WORLD	RM-PJHS1	WORLD
VPL-HS1FP	WORLD	SU-HS1	WORLD
		IFU-HS1	WORLD

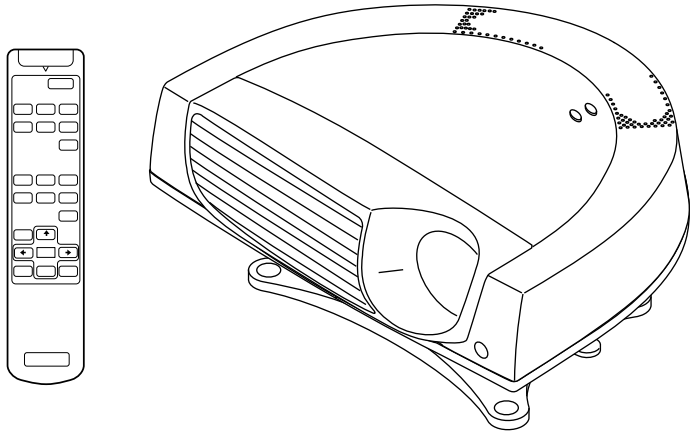

LCD VIDEO PROJECTOR

SONY®

⚠警告

このマニュアルは，サービス専用です。
お客様が，このマニュアルに記載された設置や保守，点検，修理などを行うと感電や火災，人身事故につながることがあります。
危険をさけるため，サービストレーニングを受けた技術者のみご使用ください。

⚠ WARNING

This manual is intended for qualified service personnel only.
To reduce the risk of electric shock, fire or injury, do not perform any servicing other than that contained in the operating instructions unless you are qualified to do so. Refer all servicing to qualified service personnel.

⚠ WARNUNG

Die Anleitung ist nur für qualifiziertes Fachpersonal bestimmt.
Alle Wartungsarbeiten dürfen nur von qualifiziertem Fachpersonal ausgeführt werden. Um die Gefahr eines elektrischen Schlages, Feuergefahr und Verletzungen zu vermeiden, sind bei Wartungsarbeiten strikt die Angaben in der Anleitung zu befolgen. Andere als die angegeben Wartungsarbeiten dürfen nur von Personen ausgeführt werden, die eine spezielle Befähigung dazu besitzen.

⚠ AVERTISSEMENT

Ce manual est destiné uniquement aux personnes compétentes en charge de l’entretien. Afin de réduire les risques de décharge électrique, d’incendie ou de blessure n’effectuer que les réparations indiquées dans le mode d’emploi à moins d’être qualifié pour en effectuer d’autres. Pour toute réparation faire appel à une personne compétente uniquement.

WARNING!!

AN INSULATED TRANSFORMER SHOULD BE USED DURING ANY SERVICE TO AVOID POSSIBLE SHOCK HAZARD, BECAUSE OF LIVE CHASSIS.
THE CHASSIS OF THIS RECEIVER IS DIRECTLY CONNECTED TO THE AC POWER LINE.

SAFETY-RELATED COMPONENT WARNING !!

COMPONENTS IDENTIFIED BY A ⚠ MARK ON THE SCHEMATIC DIAGRAMS, EXPLODED VIEWS AND IN THE PARTS LIST ARE CRITICAL TO SAFE OPERATION. REPLACE THESE COMPONENTS WITH SONY PARTS WHOSE PART NUMBERS APPEAR AS SHOWN IN THIS MANUAL OR IN SUPPLEMENTS PUBLISHED BY SONY.

ATTENTION!!

AFIN D’ÉVITER TOUT RISQUE D’ÉLECTROCUTION PROVENANT D’UN CHÂSSIS SOUS TENSION, UN TRANSFORMATEUR D’ISOLEMENT DOIT ETRE UTILISÉ LORS DE TOUT DÉPANNAGE.
LE CHÂSSIS DE CE RÉCEPTEUR EST DIRECTEMENT RACCORDÉ Á L’ALIMENTATION SECTEUR.

ATTENTION AUX COMPOSANTS RELATIFS Á LA SÉCURITÉ!!

LES COMPOSANTS IDENTIFIÉS PAR UNE MAPQUE ⚠ SUR LES SCHÉMAS DE PRINCIPE, LES VUES EXPLOSÉES ET LES LISTES DE PIECES SONT D’UNE IMPORTANCE CRITIQUE POUR LA SÉCURITÉ DU FONCTIONNEMENT. NE LES REMPLACER QUE PAR DES COMPOSANTS SONY DONT LE NUMÉRO DE PIÈCE EST INDIQUÉ DANS LE PRÉSENT MANUEL OU DANS DES SUPPLÉMENTS PUBLIÉS PAR SONY.

For the customers in the Netherlands
Voor de klanten in Nederland

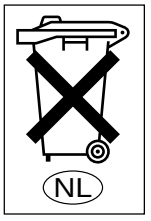

•Gooi de batterij niet weg, maar lever hem in als KCA.

Table of Contents

1. Operating Instructions

2. Service Informations

3. Electrical Adjustments

4. Semiconductors

5. Spare Parts

6. Block Diagrams

7. Diagrams

SONY

4-085-330-**11** (1)

LCD Video Projector

MEMORY STICK

VPL-HS1

1-1. VPL-HS1

Section 1
Operating Instructions

Reprinted from the operating instructions

WARNING

To prevent fire or shock hazard, do not expose the unit to rain or moisture.
To avoid electrical shock, do not open the cabinet. Refer servicing to qualified personnel only.

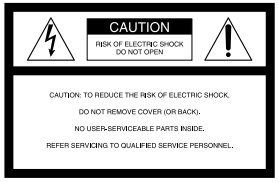

This symbol is intended to alert the user to the presence of uninsulated "dangerous voltage" within the product's enclosure that may be of sufficient magnitude to constitute a risk of electric shock to persons.

This symbol is intended to alert the user to the presence of important operating and maintenance (servicing) instructions in the literature accompanying the appliance.

For the customers in the USA
If you have any questions about this product, you may contact:
Sony Electronics Inc.
Attn: Business Information Center (BIC)
12451 Gateway Boulevard
Ft. Myers, Florida 33913
Telephone No.: 800-686-7669
The number below is for FCC related matters only.

Declaration of Conformity
Trade Name: SONY
Model No.: VPL-HS1
Responsible Party: Sony Electronics Inc.
Address: 680 Kinderkamack Road, Oradell
NJ 07649 U.S.A.
Telephone No.: 201-930-6972

This device complies with Part 15 of the FCC Rules. Operation is subject to the following two conditions: (1) This device may not cause harmful interference, and (2) this device must accept any interference received, including interference that may cause undesired operation.

This equipment has been tested and found to comply with the limits for a Class B digital device, pursuant to Part 15 of the FCC Rules. These limits are designed to provide reasonable protection against harmful interference in a residential installation. This equipment generates, uses, and can radiate radio frequency energy and, if not installed and used in accordance with the instructions, may cause harmful interference to radio communications. However, there is no guarantee that interference will not occur in a particular installation. If this equipment does cause harmful interference to radio or television reception, which can be determined by turning the equipment off and on, the user is encouraged to try to correct the interference by one or more of the following measures:
- Reorient or relocate the receiving antenna.
- Increase the separation between the equipment and receiver.
- Connect the equipment into an outlet on a circuit different from that to which the receiver is connected.
- Consult the dealer or an experienced radio/TV technician for help.

You are cautioned that any changes or modifications not expressly approved in this manual could void your authority to operate this equipment.

For the customers in Canada
This Class B digital apparatus complies with Canadian ICES-003.

Voor de klanten in Nederland

Bij dit product zijn batterijen geleverd. Wanneer deze leeg zijn, moet u ze niet weggooien maar inleveren als KCA.

The socket-outlet should be installed near the equipment and be easily accessible.

Table of Contents

Precautions

On safety

- Check that the operating voltage of your unit is identical with the voltage of your local power supply.
- Should any liquid or solid object fall into the cabinet, unplug the unit and have it checked by qualified personnel before operating it further.
- Unplug the unit from the wall outlet if it is not to be used for several days.
- To disconnect the cord, pull it out by the plug. Never pull the cord itself.
- The wall outlet should be near the unit and easily accessible.
- The unit is not disconnected to the AC power source (mains) as long as it is connected to the wall outlet, even if the unit itself has been turned off.
- Do not look into the lens while the lamp is on.
- Do not place your hand or objects near the ventilation holes. The air coming out is hot.

On preventing internal heat build-up

After you turn off the power with the I / ⏻ (on/standby) switch, do not disconnect the unit from the wall outlet while the cooling fan is still running.

Caution

The projector is equipped with ventilation holes (intake) and ventilation holes (exhaust). Do not block or place anything near these holes, or internal heat build-up may occur, causing picture degradation or damage to the projector.

On repacking

Save the original shipping carton and packing material; they will come in handy if you ever have to ship your unit. For maximum protection, repack your unit as it was originally packed at the factory.

Connections and Preparations

This section describes how to install the projector and screen, how to connect the equipment from which you want to project the picture, etc.

Unpacking

Check the carton to make sure it contains the following items:

Remote control (1), Size AA (R6) batteries (2)

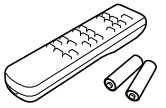

Signal interface cable (1)

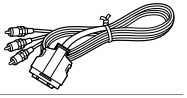

Air filter (for replacement) (1)

Lens cap (1)

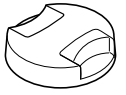

AC power cord (1)
Operating Instructions (1)

Inserting the batteries into the remote control

Insert the batteries ⊖ side first as shown in the illustration.

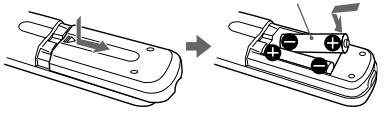

Step 1: Installing the Projector

You can obtain good picture quality even when you project the picture from the side of the screen (“SIDE SHOT”) (☞ page 7). You can enjoy home entertainment with this projector in various situations.

Enjoying home theater

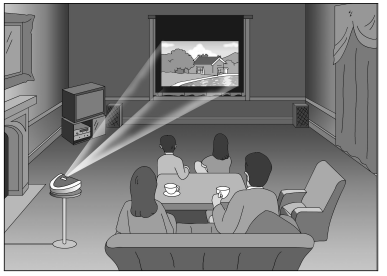

Enjoying video games on a large screen

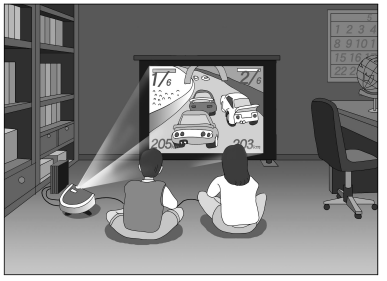

Watching sports, etc. with your company

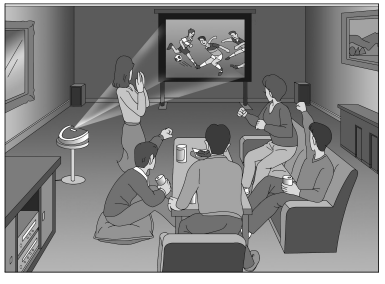

Viewing images, recorded by a digital camera and stored in the "Memory Stick," on a large screen.

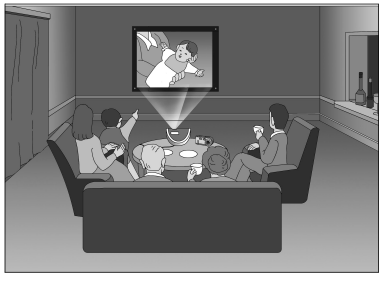

Before Setting Up the Projector

Do not place the projector in the following situations, which may cause malfunction or damage to the projector.

Poorly ventilated

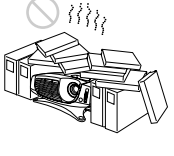

Highly heated and humid

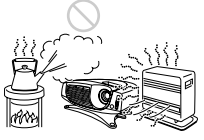

Very dusty and extremely smoky

Do not use the projector under the following conditions.

Tilting the unit out of the range of the adjuster setting

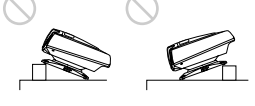

Blocking the ventilation holes

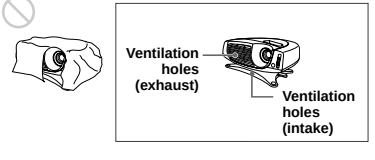

Placing the projector without the adjuster

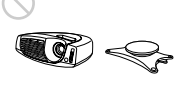

Installing the Projector and a Screen

The installation distance between the projector and screen varies depending on the size of the screen.

1 Determine the installation position of the projector and screen.

When projecting from the side (SIDE SHOT)

Position the projector with the lens end come within the area in the illustration, by using the values **a**, **b**, **c** and **d** in the table below as a guide. Align the bottom of the adjuster of the projector with the bottom end of the screen.

When projecting from the center

You can change the projection angle using the adjuster.
Position the projector with the lens end come within the area in the illustration, by using the values **c** and **d** in the table below as a guide.

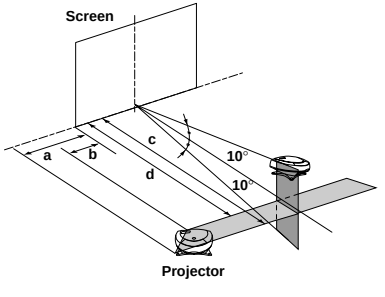

a: Maximum horizontal distance between the right/left end of the screen and the center of the projector's lens when the projector is placed on the side (for "SIDE SHOT")
b: Horizontal distance between the right/left end of the screen and the center of the lens when the projector is placed on the side (for "SIDE SHOT")
c: Maximum projection distance between the screen and the center of the projector's lens when you use the horizontal distance **a**, or when you place the projector with the center of the screen and the center of the lens aligned.
d: Minimum projection distance between the screen and the center of the lens when you use the horizontal distance **b**, or when you place the projector with the center of the screen and the center of the lens aligned.

Unit: m (feet)

Screen size (inches)	40	60	80	100	120	150
a	0.6 (2.0)	0.9 (3.0)	1.2 (3.9)	1.5 (4.9)	1.8 (5.9)	2.3 (7.5)
b	0.4 (1.3)	0.6 (2.0)	0.8 (2.6)	1.0 (3.3)	1.2 (3.9)	1.6 (5.2)
c	1.7 (5.6)	2.7 (8.9)	3.6 (11.8)	4.5 (14.8)	5.4 (17.7)	6.8 (22.3)
d	1.6 (5.2)	2.5 (8.2)	3.3 (10.8)	4.2 (13.8)	5.0 (16.4)	6.3 (20.7)

When you project a 720p format signal, computer's signal, etc.

The table shows the distances when projecting the conventional video signals. Distances used for projecting a 720p format signal, computer's signal and data stored in the "Memory Stick" are shown on page 41.

2 Project an image on the screen and adjust the picture so that it fits the screen.

To project an image, connect video equipment to the projector. (☞ page 8)

Step 2: Connecting the Projector

When making connections, be sure to do the following:

- Turn off all equipment before making any connections.
- Use the proper cables for each connection.
- Insert the cable plugs properly; plugs that are not fully inserted often generate noise. When pulling out a cable, be sure to pull it out from the plug, not the cable itself.
- When you connect your projector to PJ MULTI INPUT, select the input signal with the INPUT-A setting in the SET SETTING menu. (☞ page 20)

Connecting with video equipment

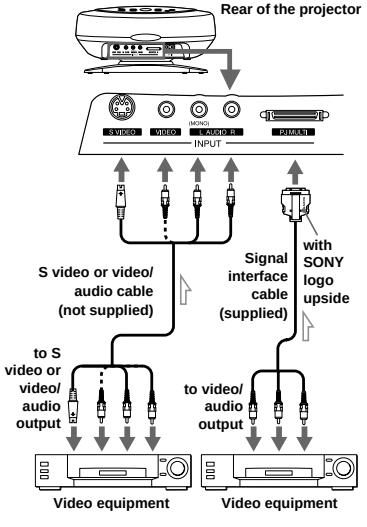

Connecting Using the Optional Signal Interface Cables

To connect with a DVD player with component video connectors/digital BS tuner

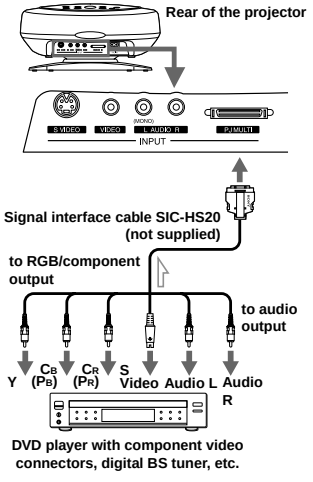

To connect with an AV amplifier

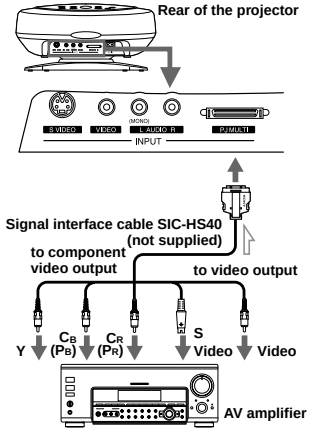

To connect with a computer

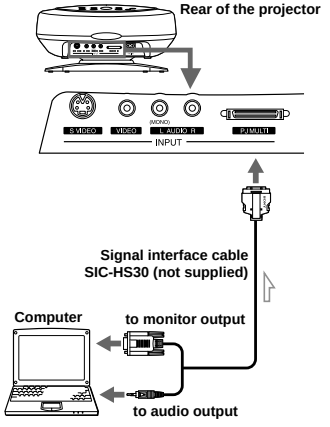

Connecting Using the Optional Interface Unit

Using the optional interface unit allows you to connect various video equipment, and to select the output to the projector or TV from the connected equipment simply by switching the select switch on the interface unit.

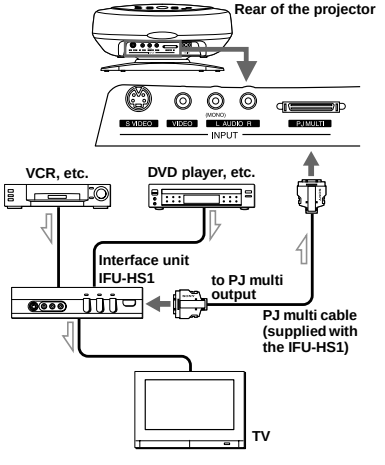

Step 3: Adjusting the Picture Size and Position

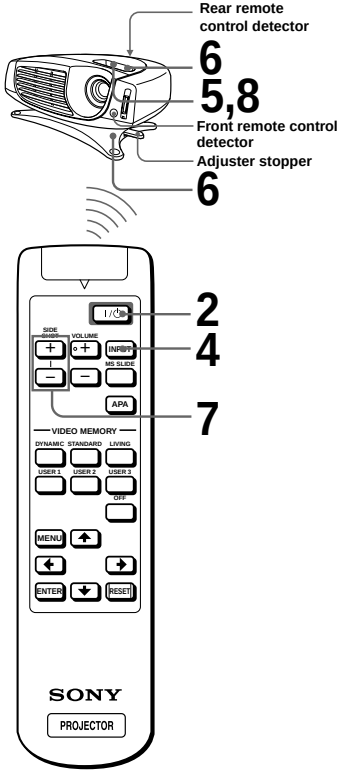

1 Plug the AC power cord into a wall outlet.

The ON/STANDBY indicator lights in red and the projector goes into standby mode.

Lights in red.

2 Press the I/⏻ (on/standby) switch to turn on the projector.

The ON/STANDBY indicator lights in green.

Lights in green.

3 Turn on the equipment connected to the projector.

Refer to the operating instructions of the connected equipment.

4 Press INPUT to project the picture on the screen.

Each time you press the button, the input indication changes. (☞ page 15)

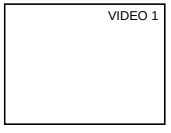

5 Adjust the focus roughly using the focus lever.

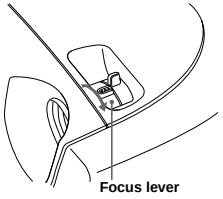

6 Adjust the size and position of the picture to fit the screen using the zoom lever and adjuster.

Move the zoom lever to adjust the picture size.

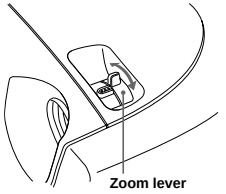

Use the adjuster to adjust the picture position. Hold down and slide the adjuster stopper to the right, move the projector, then replace the stopper.

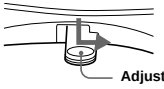

You can move the projector vertically and horizontally within the following ranges:

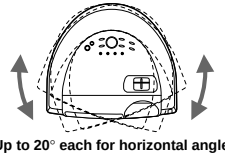

Up to 20° each for horizontal angle

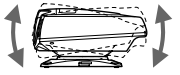

Up to 10° each for vertical angle

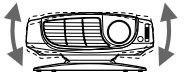

Up to 2° each for tilting angle

When projecting from the side

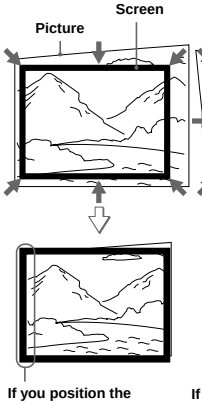

If you position the projector on the left side of the screen, adjust so that the left side of the picture fits the left side of the screen. For the projector positioned on the right side, adjust so that the right side of the picture fits the right side of the screen.

When projecting from the center

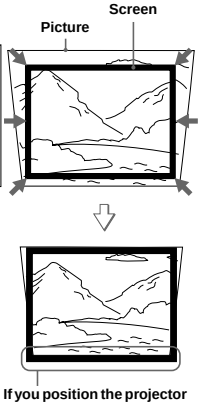

If you position the projector below the bottom of the screen, adjust so that the bottom edge of the picture fits the bottom edge of the screen. For the projector positioned above the bottom of the screen, adjust so that the top edge of the picture fits the top edge of the screen.

7 Adjust to correct the trapezoidal distortion.

When projecting from the side

Corrects the horizontal distortion.
Press SIDE SHOT + or – so that the top edge of the picture becomes parallel to the bottom edge.
If the left side is longer than the right side, press SIDE SHOT –.

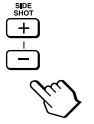

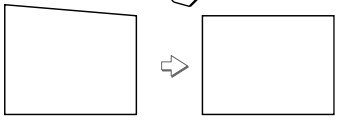

Use SIDE SHOT + if the right side is longer.
To fine-adjust the distortion, press ↑ or ↓.

When projecting from the center

Corrects the vertical distortion.
Use the menu. Select V (vertical) with the KEYSTONE DIR setting in the INSTALL SETTING menu. Next, adjust with the DIGIT KEYSTONE setting so that the left side of the picture becomes parallel to the right side. (☞ page 20)
If the top edge of the picture is longer than the bottom edge, set to a plus value.

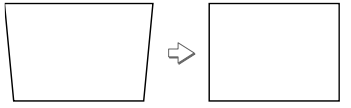

If the bottom edge is longer than the top edge, set to a minus value.

8 Adjust the focus again using the focus lever.

Step 4: Selecting the Menu Language

You can select one of nine languages for displaying the menu and other on-screen displays. The factory default setting is English.

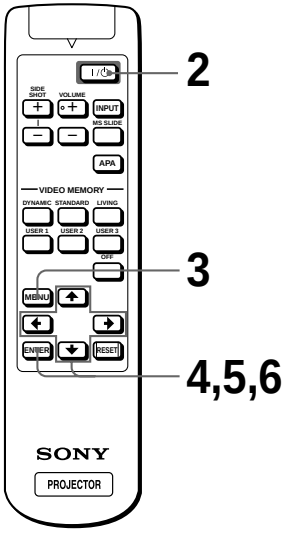

1 Plug the AC power cord into a wall outlet.

The ON/STANDBY indicator lights in red and the projector goes into standby mode.

2 Press the I/⏻ (on/standby) switch to turn on the projector.

The ON/STANDBY indicator lights in green.

3 Press MENU.

The menu appears.
The menu presently selected is shown as a yellow button.

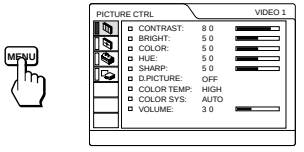

4 Press ↑ or ↓ to select the SET SETTING menu, and press → or ENTER.

The selected menu appears.

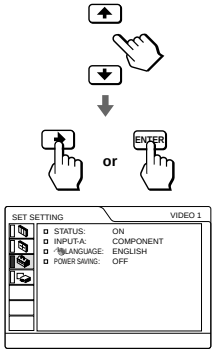

5 Press ↑ or ↓ to select LANGUAGE, and press → or ENTER.

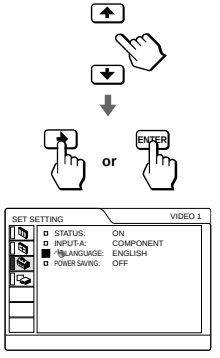

6 Press ↑ or ↓ to select a language, and press ← or ENTER.

The menu changes to the selected language.

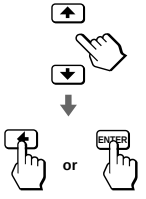

To clear the menu

Press MENU.

Projecting

This section describes how to operate the projector to view the picture from the equipment connected to the projector. It also describes how to adjust the quality of the picture to suit your taste.

Projecting the Picture on the Screen

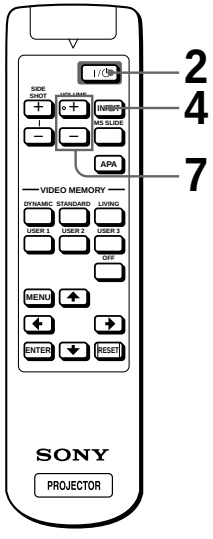

1 Plug the AC power cord into a wall outlet.

The ON/STANDBY indicator lights in red and the projector goes into standby mode.

Lights in red.

2 Press the I/⏻ (on/standby) switch to turn on the projector.

The ON/STANDBY indicator lights in green.

Lights in green.

3 Turn on the equipment connected to the projector.

Refer to the operating instructions of the connected equipment.

4 Press INPUT repeatedly to select the input you want to project on the screen.

Display the indication of the input you want.

Example: To view the picture from the video equipment connected to the VIDEO INPUT jack.

To view the picture from	Press INPUT to display	Sound is heard from the equipment connected to
Video equipment connected to VIDEO INPUT on the projector	VIDEO 1	AUDIO INPUT
Video equipment connected to S VIDEO INPUT on the projector	S-VIDEO 1	AUDIO INPUT
RGB/component equipment connected to PJ MULTI INPUT via the optional signal interface cable or the interface unit	INPUT A*	PJ MULTI INPUT
Video equipment connected to PJ MULTI INPUT via the optional signal interface cable or the interface unit	VIDEO 2	PJ MULTI INPUT
Video equipment equipped with S VIDEO connected to PJ MULTI INPUT via the optional signal interface cable or the interface unit	S-VIDEO 2	PJ MULTI INPUT
"Memory Stick" inserted into the "Memory Stick" slot	MS	AUDIO INPUT

* Set the INPUT-A setting in the SET SETTING menu according to the input signal. (☞ page 20)

5 Move the zoom lever to adjust the size of the picture.

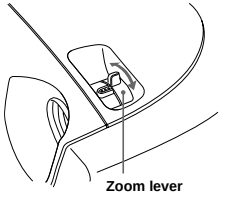

6 Move the focus lever to adjust the focus.

Adjust to obtain sharp focus.

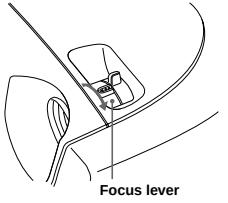

7 Press VOLUME + or – to adjust the volume.

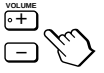

To turn off the power

1 **Press the I/⏻ (on/standby) switch.**
A message "Power OFF?" appears on the screen.

2 **Press the I/⏻ switch again.**
The ON/STANDBY indicator flashes in green and the fan continues to run to reduce the internal heat. Also, the ON/STANDBY indicator flashes quickly during which you will not be able to light up the ON/STANDBY indicator with the I/⏻ switch.

3 **Unplug the AC power cord from the wall outlet after the fan stops running and the ON/STANDBY indicator lights in red.**

You can turn off the projector by holding the I/⏻ (on/standby) switch for about one second, instead of performing the above steps.

Selecting the Picture Viewing Mode

You can select the picture viewing mode that best suits the type of program or room condition.

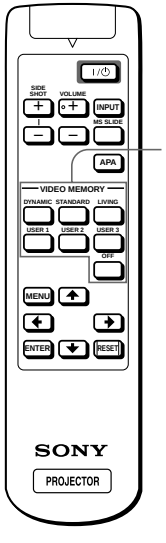

Press one of the VIDEO MEMORY buttons (DYNAMIC, STANDARD, LIVING and USER 1, 2 and 3).

DYNAMIC
Select for enhanced picture contrast and sharpness.

STANDARD
Recommended for normal viewing condition in your home.
Also select to reduce roughness when viewing the picture with DYNAMIC.

LIVING
Select for soft, film-like picture.

USER 1, 2 and 3
You can adjust the quality of the picture to suit your taste and store the settings into the selected memory of the projector. Press one of the USER 1, 2 and 3 buttons, then adjust the picture by using the menus. The settings are stored, and you can view the picture with the adjusted picture quality by pressing the button. (☞ page 20)

OFF
Select for the setting stored in each input that can be selected with the INPUT button, or each input signal.

Tip
You can select the picture viewing mode using the VIDEO MEMORY button on the projector. Each press of the button selects the above item.

Using the Menus

This section describes how to make various adjustments and settings using the menus.

Operation through the Menus

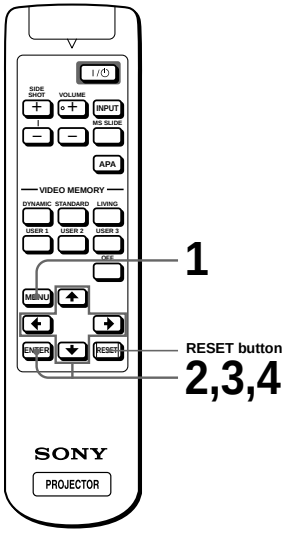

1 Press MENU.

The menu appears.
The menu presently selected is shown as a yellow button.

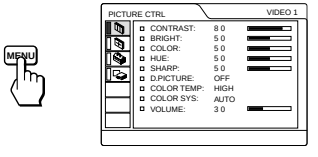

2 Press ↑ or ↓ to select a menu, and press → or ENTER.

The selected menu appears.

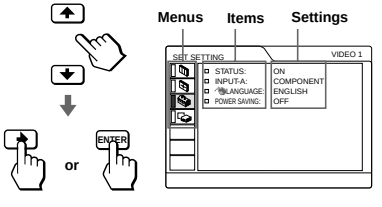

3 Select an item you want to adjust.

Use ↑ or ↓ to select an item, and press → or ENTER.

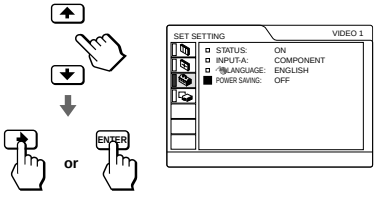

4 Make the setting or adjustment on an item.

When changing the adjustment level

To increase the value, press ↑ or →.
To decrease the value, press ↓ or ←.
Press ENTER to restore the original screen.

When changing the setting

Press ↑ or ↓ to change the setting.
Press ← or ENTER to restore the original screen.

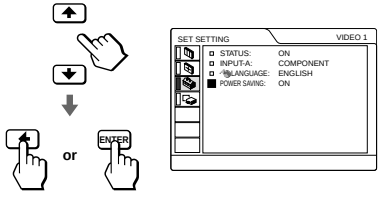

To clear the menu

Press MENU.

To reset items that have been adjusted

Select the item you want to reset, then press RESET. "Complete!" appears on the screen and the setting is reset to its factory preset value.
Items that can be reset are:

- CONTRAST, BRIGHT, COLOR, HUE, SHARP and RGB ENHANCER in the PICTURE CTRL menu
- DOT PHASE, SIZE H and SHIFT in the INPUT SETTING menu
- DIGIT KEYSTONE in the INSTALL SETTING menu

Menu Configurations

The projector is equipped with four menu pages. The items that can be adjusted in each menu are described on pages 19 and 20.

PICTURE CTRL menu

The PICTURE CTRL menu is used for adjusting the picture. You can also adjust the volume with this menu.

INPUT SETTING menu

The INPUT SETTING menu is used to adjust the input signal. You can adjust the size and position, etc. of the picture.

SET SETTING menu

The SET SETTING menu is used for changing the settings of the projector.

INSTALL SETTING menu

The INSTALL SETTING menu is used for correcting distortion. You can change the display position, intensity of the background picture, etc., of the menu screen.

Menu Items

Adjustable items are limited according to the input signals. Items that cannot be adjusted are not displayed in the menu. (☞ page 42)

Menu	Item	Description
PICTURE CTRL	CONTRAST	The higher the setting, the greater the contrast. The lower the setting, the lower the cotrast.
	BRIGHT (brightness)	The higher the setting, the brighter the picture. The lower the setting, the darker the picture.
	COLOR	The higher the setting, the greater the intensity. The lower the setting, the lower the intensity.
	HUE	The higher the setting, the more greenish the picture becomes. The lower the setting, the more purplish the picture becomes.
	SHARP (sharpness)	The higher the setting, the sharper the picture. The lower the setting, the softer the picture.
	RGB ENHANCER	Adjusts the picture sharpness when computer signals are input.
	D. (Dynamic) PICTURE	**ON:** Emphasizes the black color. **OFF:** Reproduces the dark portions of the picture accurately, in accordance with the source signal.
	GAMMA MODE	**GRAPHICS:** Reproduces the photos in natural tones. **TEXT:** Contrasts black and white. Suitable for images that contain lots of text.
	COLOR TEMP	**HIGH:** Gives the white colors a blue tint. **MIDDLE:** Gives the white colors a neutral tint. **LOW:** Gives the white colors a red tint.
	COLOR SYS (System)	Select the color system of the input signal. **AUTO:** NTSC3.58, PAL, SECAM and NTSC4.43 (switched automatically). Normally, set to this position. **PAL-M/N:** PAL-M/PAL-N and NTSC3.58 (switched automatically). When the PAL-M, PAL-N or NTSC3.58 signal is input with COLOR SYS set to AUTO, set to this position if the picture is distorted or colorless.
	VOLUME	Adjusts the volume. It can be adjusted for each of the inputs selected with the INPUT button.
INPUT SETTING	DOT PHASE	When a signal from a computer is input, adjusts the picture for clearer picture after the picture is adjusted by pressing the APA button.
	SIZE H	When a signal from a computer is input, adjusts the horizontal size of the picture. The higher the setting, the wider the picture. The lower the setting, the narrower the picture.
	SHIFT	As the setting for **H** (horizontal) increases, the picture moves to the right, and as the setting decreases, the picture moves to the left. Use ← or → to adjust the horizontal position. As the setting for **V** (vertical) increases, the picture moves up, and as the setting decreases, the picture moves down. Use ↑ or ↓ to adjust the vertical position.
	SCAN CONV (Scan converter)	**ON:** Displays a computer signal according to the screen size. The picture will be slightly softer. **OFF:** Displays a computer signal as it is input. The picture will be clear but the picture size will be smaller. **Note** When SVGA or XGA signal is input, this item will not be displayed.
	ASPECT	**4:3:** Select when the 4:3 aspect ratio picture is input. **16:9:** Select when the 16:9 aspect ratio picture (sqeezed) is input from equipment such as a DVD player.

Menu	Item	Description
INPUT SETTING (continued)	VIDEO MEMORY	You can select picture viewing mode that best suits the type of picture or the environment. **OFF:** Select for the setting stored in each input channel or input signal. **DYNAMIC:** Select for enhanced picture contrast and sharpness. **STANDARD:** Recommended for normal viewing condition. Also select to reduce roughness when viewing the picture with DYNAMIC. **LIVING:** Select for soft, film-like picture. **USER 1, 2 and 3:** You can adjust the quality of the picture to suit your taste and store the settings. Once the settings are stored, you can view the picture with the adjusted picture quality by pressing the button. **To store the settings** **1** Select USER 1, USER 2 or USER 3. **2** Adjust the items you want in the menus. **Items that can be stored are:** CONTRAST, BRIGHT, COLOR, HUE, SHARP, RGB ENHANCER, D.PICTURE, COLOR TEMP, COLOR SYS, SCAN CONV, ASPECT. **Tip** You can also adjust the picture quality in DYNAMIC, STANDARD or LIVING mode. To reset to the factory setting, press RESET.
SET SETTING	STATUS	Set to **OFF** to turn off the on-screen displays except for the menus, message when turning off the power, and warning messages. To display all of the on-screen display again, set to **ON**.
	INPUT-A	Selects the signal input from the PJ MULTI connector. **COMPUTER:** Inputs the signal from a computer. **COMPONENT:** Inputs the component or progressive component signal from a DVD player, digital BS tuner, etc. **VIDEO GBR:** Inputs the signal from a TV game, DVD player or HDTV broadcast.
	LANGUAGE	Selects the language used in the menu and on-screen displays. Available languages are: English, French, German, Italian, Spanish, Japanese, Chinese, Portuguese and Korean.
	POWER SAVING	When set to **ON**, the POWER SAVING indicator lights. The projector goes into power saving mode if no signal is input for 10 minutes, and the lamp goes out and the cooling fan keeps running. In power saving mode, no button functions for the first 60 seconds. It is cancelled when a signal is input or any button is pressed. If you do not set the projector to power saving mode, select **OFF**.
INSTALL SETTING	KEYSTONE MEM (memory)	**ON:** DIGIT KEYSTONE setting is stored. The data is retrieved when the projector power is turned on. The setting will remain the same every time. **OFF:** DIGIT KEYSTONE is reset to “0” when the power is turned on next time.
	DIGIT KEYSTONE	Corrects the trapezoidal distortion caused by the projection angle. Use this item after selecting the type of distortion, H (horizontal) or V (vertical), with KEYSTONE DIR.
	KEYSTONE DIR	When the picture is a vertical trapezoid ( ), select **V**. Next, correct the distortion with DIGIT KEYSTONE. When the picture is a holizontal trapezoid ( ), select **H**, then correct the distortion with DIGIT KEYSTONE.
	MENU POSITION	Selects the display position from TOP LEFT, BOTTOM LEFT, CENTER, TOP RIGHT and BOTTOM RIGHT.
	MENU COLOR	Selects the tone of the menu display from STANDARD, WARM, COOL, GREEN or GRAY.
	MENU BACKGROUND	Selects the intensity of the background picture of the menu display from DARK, STANDARD or LIGHT.
	LAMP TIMER	Indicates how long the lamp has been turned on.

About the Preset Memory No.

This projector has 32 types of preset data for input signals (the preset memory). When the preset signal is input, the projector automatically detects the signal type and recalls the data for the signal from the preset memory to adjust it to an optimum picture. The memory number and signal type of that signal are displayed in the INPUT SETTING menu.

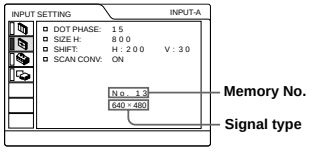

You can also adjust the preset data through the INPUT SETTING menu.
This projector also has 20 types of user memories for INPUT-A into which you can save the setting of the adjusted data for an unpreset input signal.
When an unpreset signal is input for the first time, a memory number is displayed as 0. When you adjust the data of the signal in the INPUT SETTING menu, it will be registered to the projector. If more than 20 user memories are registered, the newest memory always overwrites the oldest one.
See the chart on page 43 to find if the signal is registered to the preset memory.

Since the data is recalled from the preset memory about the following signals, you can use these preset data by adjusting SIZE H. Make fine adjustment by adjusting SHIFT.

Signal	Memory No.	SIZE
Super Mac-2	23	1312
SGI-1	23	1320
Macintosh 19”	25	1328

Note
When the aspect ratio of input signal is other than 4:3, a part of the screen is displayed in black.

Adjusting Picture Quality of a Signal from the Computer

You can automatically adjust to obtain the clearest picture when projecting a signal from the computer.

1 Project a still picture from the computer.

2 Press the APA button.
When the picture is adjusted properly, “complete” appears on the screen.

Notes
- Press the APA button when the full image is displayed on the screen. If there are black edges around the image, the APA function will not function properly and the image may extend beyond the screen.
- If you switch the input signal or re-connect a computer, press the APA button again to get the suitable picture.
- To restore the original screen, press the APA button again during the adjustment.
- The picture may not be adjusted properly depending on the kinds of input signals.
- Adjust the items in the INPUT SETTING menu when you adjust the picture manually. (☞ page 19)

Using a "Memory Stick"

This section describes how to view the still images that are recorded by a digital camera and stored in a "Memory Stick." You can make a slide show using the images, display an index screen of the images, etc.

About a "Memory Stick"

On "Memory Stick"s

"Memory Stick" is a new compact, portable and versatile IC recording medium with a data capacity that exceeds a floppy disk. "Memory Stick" is specially designed for exchanging and sharing digital data among "Memory Stick" compatible products. Because it is removable, "Memory Stick" can also be used for external data storage.

Types of "Memory Stick"s

There are two types of "Memory Stick"s: MagicGate "Memory Stick"s that are equipped with the MagicGate copyright protection technology and general "Memory Stick"s. You can use both types of "Memory Stick" with your projector. However, because your projector does not support the MagicGate standards, data recorded in the "Memory Stick" is not subject to MagicGate copyright protection.

On MagicGate

MagicGate is copyright protection technology that uses encryption technology.

Format that can be displayed with this projector

Image data recorded with a digital camera and recorded on a Memory Stick in the following format: Images (DCF-compatible) compressed in the JPEG (Joint Photographic Experts Group) format (extension: .jpg)

Before using a "Memory Stick"

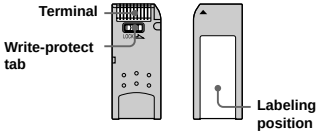

- You cannot rotate or erase still images when the write-protect tab on the "Memory Stick" is set to LOCK.
- We recommend backing up important data.
- Image data may be damaged in the following cases:
  – If you remove the "Memory Stick," turn the power off, or detach the battery for replacement when the access lamp is flashing.
  – If you use a "Memory Stick" near static electricity or magnetic fields.

Notes

- Prevent metallic objects or your finger from coming into contact with the metal parts of the connecting section.
- Do not attach any other material than the supplied label onto the label space.
- Attach the label to the prescribed labeling position. Make sure the label is attached to the labeling position properly.
- Do not bend, drop or apply strong shock to a "Memory Stick."
- Do not disassemble or modify a "Memory Stick."
- Do not let the "Memory Stick" get wet.
- Do not use or keep a "Memory Stick" in locations that are:
  – Extremely hot such as in a car parked in the sun or under the scorching sun.
  – Under direct sunlight.
  – Very humid or subject to corrosive gases.
- When you carry or store a "Memory Stick," put it in its case.

About formatting "Memory Stick"s

When "Memory Stick"s are shipped from the factory, they are already formatted to a special standard format. When you format "Memory Stick"s, we recommend formatting them on this unit.

Caution when formatting "Memory Stick"s on a personal computer

Pay attention to the following points when formatting "Memory Stick"s on the personal computer, for example, that you are using.
Operation of "Memory Stick"s formatted on the personal computer is not guaranteed on this unit. To use a "Memory Stick" that has been formatted on the personal computer, the "Memory Stick" must be reformatted on this unit. Note that in this case all data stored on the "Memory Stick" will be lost.

Access Lamp

If the access lamp is turned on or is flashing, data is being read from or written to the "Memory Stick." Do not shake the projector or subject it to shock. Do not turn off the power of the projector or remove the "Memory Stick." This may damage the data.

Notes

- To prevent data loss, make backup of data frequently. In no event will Sony be liable for any loss of data.
- Unauthorized recording may be contrary to the provisions of copyright law.
- The "Memory Stick" application software may be modified or changed by Sony without prior notice.

Preparing for Viewing the Still Picture Stored in a "Memory Stick"

Inserting a "Memory Stick"

Insert the "Memory Stick" into the "Memory Stick" slot on the front of the projector.

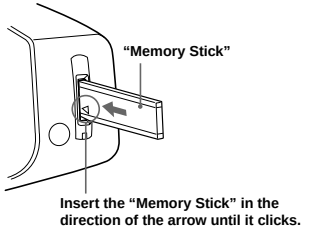

To remove the "Memory Stick"

When the access lamp is turned off, press the "Memory Stick" and remove your hand. As the lock is released, remove the "Memory Stick."

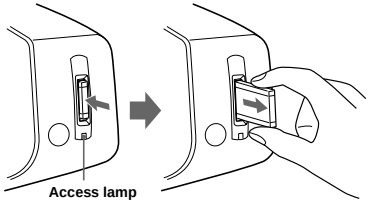

Using the MS ("Memory Stick") Home

The initial display on the screen is MS Home when you select MS with the INPUT button. The MS home display is used for executing an event (e.g., slide show with JPEG Viewer), setting the Startup and initializing a "Memory Stick." The guide for the button operation is displayed at the bottom of the MS home display. The selected item is displayed in yellow.

Press INPUT to select MS.

MS home appears.

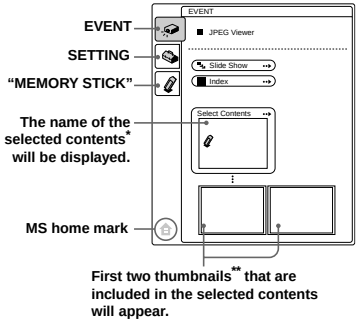

* Multiple still pictures are included in the contents. The contents may include individual still pictures and other contents. You must select contents when you are viewing a still picture stored in a "Memory Stick."

** Several small pictures included in the contents can be displayed at one time. They are called thumbnails.

Viewing Still Images in Sequence — Slide Show

You can run a slide show by using still pictures (DCF-compatible) of the JPEG format recorded by a digital camera. You can advance a slide automatically or manually.

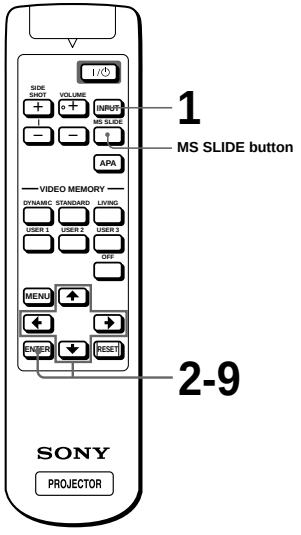

1 Select MS by pressing the INPUT button to display the MS home. (☞ left column)

2 Press ↑ or ↓ to select EVENT , and press ENTER.

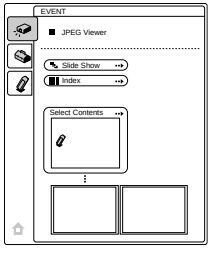

3 Press ↑ or ↓ to select "Select Contents," and press ENTER.

The sub menu for selecting the contents appears.

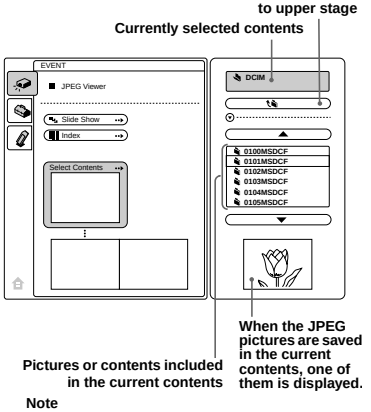

Note

The contents are sorted numerically and alphabetically up to 256 contents. The later contents will not be sorted.

4 Press ↑ or ↓ to select the contents you want to use for your slide show, and press ENTER.

When you want to select contents other than those displayed on the menu, select ▲ or ▼, then press ENTER.

5 Press ENTER.

The selected contents name and the first two thumbnails are displayed.

When you want to view all of the pictures in the selected contents, select "Index" and press ENTER.

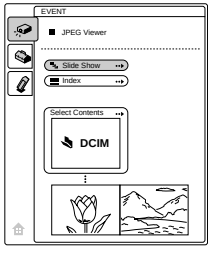

6 Press ↑ or ↓ to select "Slide Show," and press ENTER.

The sub menu for setting the following items appears.

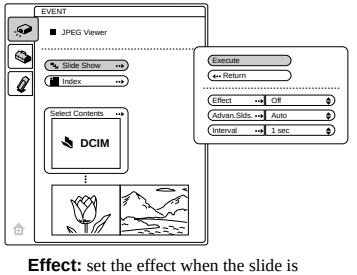

Effect: set the effect when the slide is displayed.

Advan. Slids : set to advance a next slide automatically ("Auto") or manually ("Manual").

Interval: set the period for which one slide is displayed. When "Advan. Slids" is set to "Manual," this item does not work. The time is about right.

7 Press ↑ or ↓ to select the item, and press ENTER.

8 Press ↑ or ↓ to set the selected item, and press ENTER.

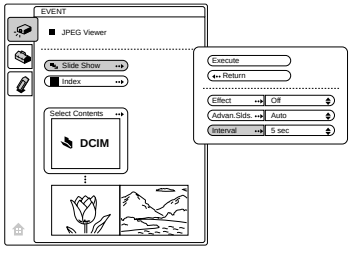

9 After setting all the items, press ↑ or ↓ to select "Execute" and press ENTER.

When you set "Advan. Slids" to "Auto," the slide show starts automatically.
When you set to "Manual," use the ← or ↓ button to advance a next slide. To return to the previous slide, use the → or ↑ button.

To end the slide show
Press MS SLIDE or ENTER.

To return to the MS home before executing the slide show
Select "Return" in step **9** above.

Executing the Slide Show Promptly
As the settings are stored even if you change the input after performing steps **1** to **8**, press MS SLIDE just as you start the slide show. The input is changed to MS and the slide show starts promptly.

Displaying Index Pictures on the Full Screen

You can display 9 index pictures (thumbnail pictures) contained in the selected contents at one time.

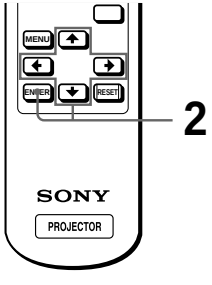

1 Perform steps 1 through 5 in "Viewing Still Images in Sequence — Slide Show." (☞ page 24)

2 Press ↑ or ↓ to select "Index," and press ENTER.

The index screen appears, and 9 index pictures of the selected contents are displayed.

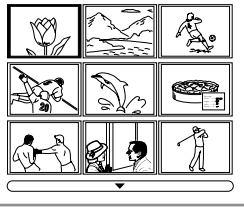

When more than 9 pictures are contained in the contents
You can display the pictures other than the displyed ones by pressing ▲ (previous 9 pictures) or ▼ (next 9 pictures) and ENTER.

To start a slide show with the index screen
Press ↑, ↓, ← or → to select a picture from which a slide show starts, then press MS SLIDE.

Note
The index pictures are sorted numerically and alphabetically up to 256 pictures. The later pictures will not be sorted.

Displaying the Index Menu

Press ↑, ↓, ← or ↓ to select a picture, and press ENTER.
The index menu for the selected picture is displayed. With this menu you can make various settings for each picture. (☞ pages 27 to 32)

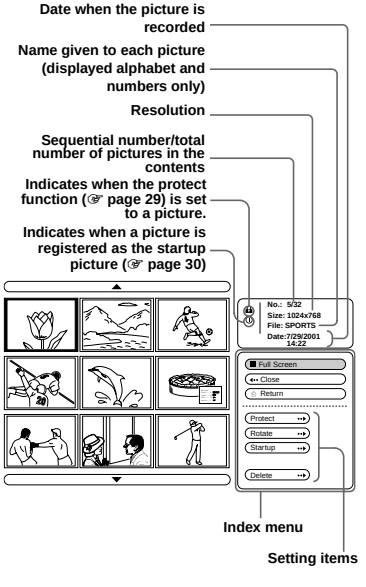

To return to the MS home
Select "Return" and press ENTER.

Displaying a Full-Screen Picture

You can project one of the index pictures on the full screen.

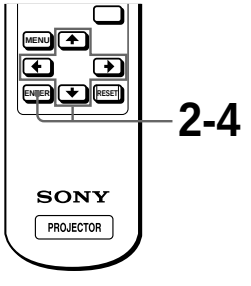

1 Perform steps 1 through 5 in "Viewing Still Images in Sequence — Slide Show." (☞ page 24)

2 Press ↑ or ↓ to select "Index," and press ENTER.

The index pictures of the selected contents are displayed.

Using a "Memory Stick"

3 **Press ↑, ↓, ← or → to select the picture you want to display on the full screen, and press ENTER.**

The Index menu appears.

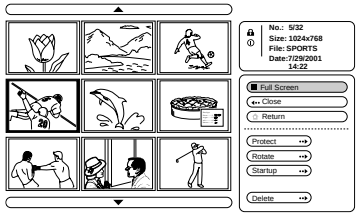

4 **Press ↑ or ↓ to select "Full Screen," and press ENTER.**

The selected picture is projected to fit the screen.

To display a previous or next slide

To display the next slide, press → or ↓. To return to the previous slide, press ← or ↑.

To return to the Index screen

Press MS SLIDE or ENTER.

Rotating a Still Picture

You can rotate a still picture in 90° steps.

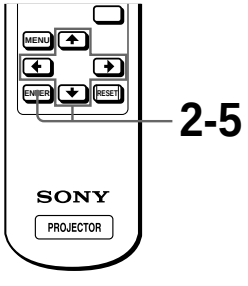

1 **Perform steps 1 through 5 in "Viewing Still Images in Sequence — Slide Show." (☞ page 24)**

2 **Press ↑ or ↓ to select "Index," and press ENTER.**

The index pictures of the selected contents are displayed.

3 **Press ↑, ↓, ← or → to select the picture you want to rotate, and press ENTER.**

The Index menu appears.

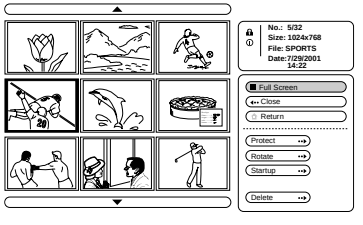

4 **Press ↑ or ↓ to select "Rotate," and press ENTER.**

5 **Press ↑ or ↓ to select the direction of rotation, ↺ (clockwise) or ↻ (counterclockwise), and press ENTER.**

The picture rotates 90° every pressing of the ENTER button.

Notes

- You cannot rotate a picture which is protected. (right column)
  To rotate it, release the protection on that picture.
- When the write-protect tab on the "Memory Stick" is set to LOCK, you cannot rotate the pictures stored in that "Memory Stick."

Protecting an Important Still Picture

You can protect a still picture to prevent it from accidental erasure.

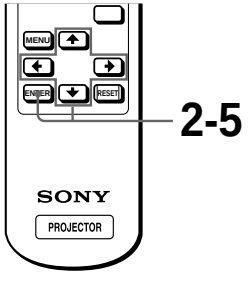

1 **Perform steps 1 through 5 in "Viewing Still Images in Sequence — Slide Show." (☞ page 24)**

2 **Press ↑ or ↓ to select "Index," and press ENTER.**

The index pictures of the selected contents are displayed.

3 **Press ↑, ↓, ← or → to select the picture you want to protect, and press ENTER.**

The Index menu appears.

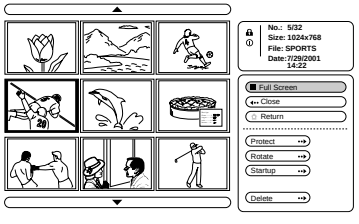

4 **Press ↑ or ↓ to select "Protect," and press ENTER.**

5 **Press ↑ or ↓ to select "On" or "All on," and press ENTER.**

On: A picture selected on the Index screen is protected.
All on: All the pictures in the selected contents are protected.
The protect mark appears in the Index menu for the protected picture.

To release protection

Select "Off" or "All off" in step **5**.
Selecting "Off" releases the protection for the selected picture. Selecting "All off" releases the protection for all the pictures in the selected contents.

Projecting a Selected Picture When the Power Is Turned On — Startup

When the projector is turned on, the specific still picture stored in the projector is projected automatically for about one minute, even if no signal is input. You can change this still picture to the one you prefer.

Registering a Still Picture as the Startup Picture

When you want to use a picture stored in your "Memory Stick" as the startup picture, register the picture in the "Memory Stick."

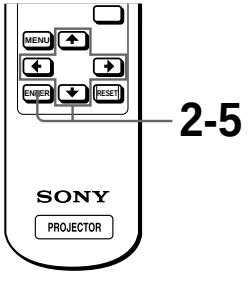

1 **Perform steps 1 through 5 in "Viewing Still Images in Sequence — Slide Show." (☞ page 24)**

2 **Press ↑ or ↓ to select "Index," and press ENTER.**

The index pictures of the selected contents are displayed.

3 **Press ↑, ↓, ← or → to select the picture you want to use as the startup picture, and press ENTER.**

The Index menu appears.

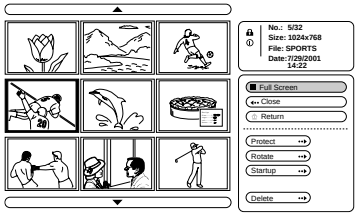

4 **Press ↑ or ↓ to select "Str. up," and press ENTER.**

5 **Press ↑ or ↓ to select "Entry," and press ENTER.**

The startup mark is displayed in the Index menu. You can register one picture used for the startup picture, per one "Memory Stick."

Setting the Startup Picture

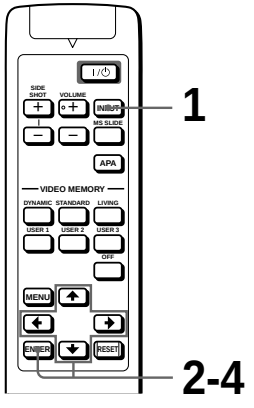

1 **Select MS by pressing the INPUT button to display MS home. (☞ page 24)**

2 **Press ↑ or ↓ to select SETTING , and press ENTER.**

3 **Press ↑ or ↓ to select "Startup," and press ENTER.**

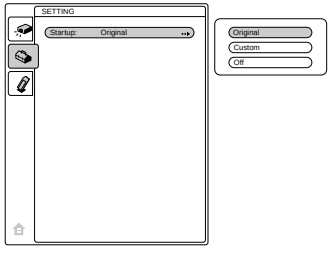

Using a "Memory Stick"

4 **Press ↑ or ↓ to select the item used for startup picture, and press ENTER.**

Original: Select to use the original picture stored in the projector. This is the factory setting.
Custom: Select to use the picture registered in the index screen and stored in the "Memory Stick." (☞ page 30)
Off: Select when you do not set the startup.

Notes
- When you want to clear the startup screen while displaying it, press ↑/↓/←/→, or ENTER.
- When you are using the registered picture, insert the "Memory Stick" where the registered picture is saved into the projector, then turn on the power.

Deleting a Still Picture

You can delete unnecessary picture from the "Memory Stick."

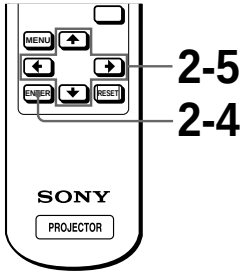

1 **Perform steps 1 through 5 in "Viewing Still Images in Sequence — Slide Show." (☞ page 24)**

2 **Press ↑ or ↓ to select "Index," and press ENTER.**

The index pictures of the selected contents are displayed.

3 **Press ↑, ↓, ← or → to select the picture you want to delete from the "Memory Stick," and press ENTER.**

The Index menu appears.

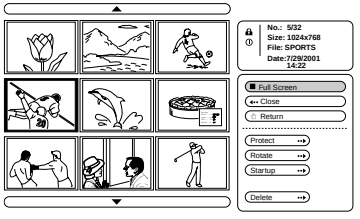

4 **Press ↑ or ↓ to select "Delete," and press ENTER.**

5 **Press ↑ or ↓ to select the item you want, then press ↑ to delete the picture(s).**

Sel. Img.: delete the selected picture
All Img.: delete all pictures of the selected contents
Close: when you do not delete the picture

Notes
- You cannot delete the picture which is protected. (☞ page 29) To delete it, release the protection on that picture.
- When the write-protect tab on the "Memory Stick" is set to LOCK, you cannot delete the pictures from that "Memory Stick."

Initializing a "Memory Stick"

When a "Memory Stick" cannot be used, initialize it by the projector.
All the data stored in a "Memory Stick" is cleared when the "Memory Stick" is initialized.

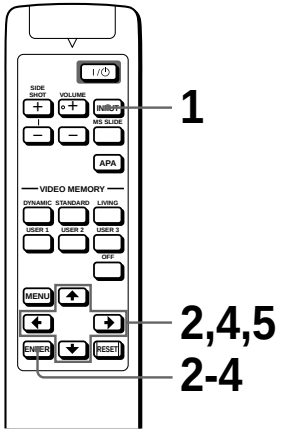

1 **Select MS by pressing the INPUT button to display the MS home. (☞ page 24)**

2 **Press ↑ or ↓ to select MEMORY STICK ✎, and press ENTER.**

3 **Press ENTER again.**

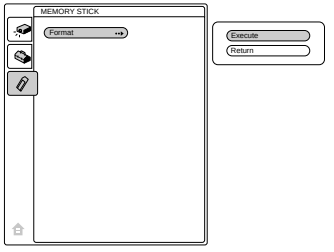

4 **Press ↑ or ↓ to select "Execute," and press ENTER.**

5 **Press ↑ to start initializing.**

To return to the MS home before initializing the "Memory Stick"

Select "Return," and press ENTER in step **4**.

Notes
- When the "Memory Stick" is initialized, the protected picture is also cleared.
- When the "Memory Stick" with the write-protect tab set to LOCK is initialized, the message "MEMORY STICK locked" is displayed.
- While initializing the "Memory Stick," you cannot use the buttons for operation in MS home.

Others

This section describes how to solve the problems, how to replace a lamp and air filter, etc.

Troubleshooting

Symptom	Cause and Remedy
The power is not turned on.	• The power has been turned off and on with the I/⏻ (on/standby) switch at a short interval. → Wait for about one minute before turning on the power (☞ page 15). • The lamp cover is detached. → Close the lamp cover securely (☞ page 38). • The air filter cover is detached. → Close the air filter cover securely (☞ page 39).
No picture.	• Cable is disconnected or the connections are wrong. → Check that the proper connections have been made (☞ pages 8 and 9). • Input selection is incorrect. → Select the input source correctly using the INPUT button (☞ page 15). • The computer signal is not set to output to an external monitor. → Set the computer signal to output to an external monitor. • The computer signal is set to output to both the LCD of the computer and external monitor. → Set the computer signal to output only to the external monitor.
The picture from the PJ MULTI connector is colored strange.	• Setting for INPUT-A in the SET SETTING menu is incorrect. → Select COMPUTER, COMPONENT or VIDEO GBR for INPUT-A in the SET SETTING menu according to the input signal (☞ page 20).
Color balance is incorrect.	• Picture has not been adjusted properly. → Adjust the picture in the PICTURE CTRL menu (☞ page 19). • Projector is set to wrong color system. → Set COLOR SYS in the PICTURE CTRL menu to match the color system being input (☞ page 19).
The picture is too dark.	• Contrast or brightness has not been adjusted properly. → Adjust the contrast or brightness in the PICTURE CTRL menu properly (☞ page 19).
The picture is not clear.	• Picture is out of focus. → Adjust the focus with the focus lever (☞ page 15). • The lens cap is attached to the lens. → Remove the lens cap. • Condensation has occurred on the lens. → Leave the projector for about two hours with the power on.

Symptom	Cause and Remedy
The picture flickers.	• DOT PHASE in the INPUT SETTING menu has not been adjusted properly. → Adjust DOT PHASE in the INPUT SETTING menu properly (☞ page 19).
On-screen display does not appear.	• STATUS in the SET SETTING menu is set to OFF. → Set STATUS in the SET SETTING menu to ON (☞ page 20).
No sound.	• Cable is disconnected or the connections are wrong. → Check that the proper connections have been made (☞ pages 8 and 9). • VOLUME setting is not correct. → Adjust VOLUME in the PICTURE CTRL menu, or press VOLUME + on the remote control.
When sound is input through the AUDIO connector, sound comes through one channel only.	• Monaural sound is being input through the AUDIO connector. → Input stereo sound.
The remote control does not work.	• Batteries cound be weak. → Replace the batteries (☞ page 5). • The polarity is not correct. → Insert the batteries with correct polarities (☞ page 5).
The “Memory Stick” cannot be inserted into the “Memory Stick” slot.	• The “Memory Stick” is not facing in the correct direction. → Insert the “Memory Stick” with the arrow mark pointing toward the “Memory Stick” slot of the projector.
A still picture in the “Memory Stick” cannot be rotated or deleted.	• The write-protect tab on the “Memory Stick” has been set to LOCK. → Cancel the lock (☞ page 22). • The picture is protected. → Release the protect in the Index screen (☞ page 29).
The “Memory Stick” cannot be formatted.	• The write-protect tab on the “Memory Stick” has been set to LOCK. → Cancel the lock (☞ page 22). • The “Memory Stick” is broken. → Use another “Memory Stick”.
When the slide show is made, the MS flashes.	• Pictures with different resolutions are used for the slide show. → Set STATUS of the SET SETTING menu to OFF (☞ page 20).
When the slide show is made, a black picture appears.	• When pictures with different resolutions are used, a black picture appears. → Set the resolution of the pictures to the same setting.
The thumbnails are not displayed.	• The pictures are the JPEG format but not DCF-compatible. → Use the DCF-compatible pictures.

Indicators

The LAMP/COVER or TEMP/FAN indicator on the control panel lights up or flashes if there is any trouble with your projector.

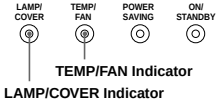

Indicator	Meaning and Remedy
LAMP/COVER flashes.	• The lamp cover or the air filter cover is detached. ➔Attach the cover securely (☞ pages 38 and 39).
LAMP/COVER lights up.	• The lamp has reached the end of its life. ➔Replace the lamp (☞ page 38). • The lamp becomes a high temperature. ➔Wait for one minute to cool down the lamp and turn on the power again (☞ page 15).
TEMP/FAN flashes.	• The fan is broken. ➔Consult with qualified Sony personnel.
TEMP/FAN lights up.	• The internal temperature is unusually high. ➔Check to see if nothing is blocking the ventilation holes.
LAMP/COVER and TEMP/FAN light up.	• The electrical system breaks down. ➔Consult with qualified Sony personnel.

Warning Messages

Use the list below to check the meaning of the messages displayed on the screen.

Message	Meaning and Remedy
High temp.! Lamp off in 1 min.	• Internal temperature is too high. ➔Turn off the power. ➔Check to see if nothing is blocking the ventilation holes.
Frequency is out of range!	• This input signal cannot be projected as the frequency is out of the acceptable range of the projector. ➔Input a signal that is within the range of the frequency. • The resolution setting of the output signal of a computer is too high. ➔Set the setting of output to SVGA.
Please check INPUT-A setting.	• You have input RGB signal from the computer when INPUT-A in the SET SETTING menu is set to COMPONENT or VIDEO GBR. ➔Set INPUT-A correctly (☞ page 20).
Please replace the LAMP.	• It is time to replace the lamp. ➔Replace the lamp (☞ page 38).
Please replace the filter.	• It is time to replace the air filter. ➔Replace the air filter (☞ page 39).

Caution Messages

Use the list below to check the meaning of the messages displayed on the screen.

Message	Meaning and Remedy
NO INPUT	• No input signal ➔Check connections (☞ page 8).
Not applicable!	• You have pressed the wrong button. ➔Press the appropriate button.
File error	• In the sub menu for selecting the contents when using a “Memory Stick,” the presently selected contents name consists of more than 66 characters (“/” included). ➔Reenter the name with less than 66 characters.
No MEMORY STICK	• The “Memory Stick” is not correctly inserted. ➔Check the “Memory Stick” and insert it correctly.

Caution displays while you are using the “Memory Stick”

When the following display appears on the screen, you cannot use this “Memory Stick.” Use another one.

?	• The image data is the JPEG format but not DCF-compatible. Resolution of the image data is out of the acceptable range of the projector. (The projector accepts images with resolution of 5120 ◊ 4096 dots.)
?	There is the thumbnail but it is not DCF-compatible.
	There is no selected image data.
	There is the image data but no thumbnail.
	There is the image data but the thumbnail is broken.
	The image data is broken.

Replacing the Lamp

The lamp used for the light source has a certain life. When the lamp dims, the color balance of the picture becomes strange, or "Please replace the LAMP." appears on the screen, the lamp is exhausted. Replace the lamp with a new one (not supplied).
Use LMP-H120 Projector Lamp as the replacement lamp.

When replacing the lamp after using the projector

Turn off the projector, then unplug the power cord. Wait for at least an hour for the lamp to cool.

Caution

The lamp becomes a high temperature after turning off the projector with the I/⏻ (on/standby) switch. If you touch the lamp, you may scald your finger. When you replace the lamp, wait for at least an hour for the lamp to cool.

1 Place a protective sheet (cloth) beneath the projector. Turn the projector over so you can see its underside.

Note

Be sure that the projector is stable after turning it over.

2 Slide the release lever on the adjuster outward and turn the adjuster clockwise to remove the adjuster.

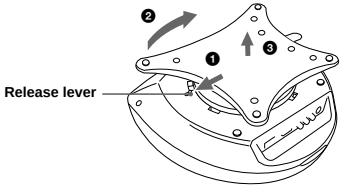

3 Open the lamp cover by loosening a screw with the Philips screwdriver.

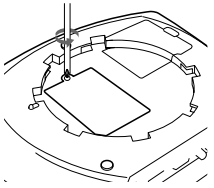

4 Loosen the two screws on the lamp unit with the Philips screwdriver. Pull out the lamp unit by the handle.

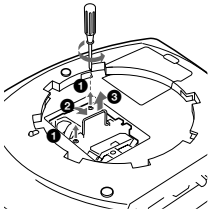

5 With the lamp surface facing toward the rear of the projector, insert the new lamp all the way in until it is securely in place. Tighten the two screws. Fold up the handle.

Notes

- Be careful not to touch the glass surface of the lamp.
- The power will not turn on if the lamp is not secured properly.

6 Close the lamp cover and tighten the screws.

7 Attach the adjuster.

8 Turn the projector back over.

9 Connect the power cord and turn the projector to standby mode.

10 Press the following buttons on the control panel in the following order for less than five seconds each: RESET, ←, →, ENTER.

Notes

- Do not put your hands into the lamp replacement spot, or not fall any liquid or object into it to avoid electrical shock or fire.
- Be sure to use the LMP-H120 Projector Lamp for replacement. If you use lamps other than LMP-H120, the projector may cause a malfunction.
- Be sure to turn off the projector and unplug the power cord before replacing the lamp.

Disposal of used projector lamp

As the materials used in this lamp are similar to those of a fluorescent lamp, you should dispose of a used projector lamp in the same way as a fluorescent lamp.

Replacing the Air Filter

The air filter should be replaced periodically. When "Please replace the filter." appears on the screen, replace the air filter immediately.

Notes

- Replacing the air filter is very important to maintain the high efficiency of the projector and to prevent a malfunction. When the replacement message appears on the screen, replace the air filter without delay.
- When removing the air filter from the projector, be careful that no dust or object gets into the inside of the projector.

1 Place a protective sheet (cloth) beneath the projector. Turn the projector over so you can see its underside.

Note

Be sure that the projector is stable after turning it over.

2 Slide the release lever on the adjuster outward and turn the adjuster clockwise to remove the adjuster.

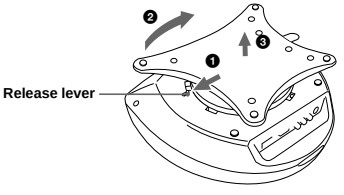

3 Push the knob on the filter cover to remove the filter cover.

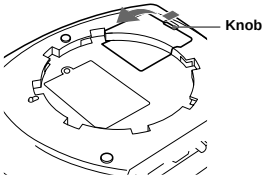

4 Remove the filter holder.

5 Remove the air filter from the filter holder by holding the tab on the air filter.

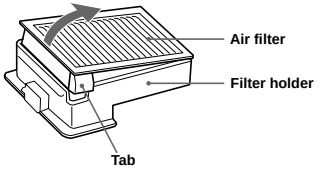

6 Insert the new air filter into the filter holder with the white surface up, then replace it in the projector.

7 Replace the filter cover.

8 Attach the adjuster.

Specifications

System

Projection system
3 LCD panels, 1 lens, projection system
LCD panel 0.7-inch TFT LCD panel, 1,440,000 pixels (480,000 pixels × 3)
Lens 1.3 times zoom lens (manual)
Lamp 120 W UHP type
Projection picture size
Range: 40 to 150 inches (measured diagonally)
Color system NTSC3.58/PAL/SECAM/NTSC4.43/PAL-M/PAL-N system, switched automatically/manually
Acceptable video signals
15k, DTV (480i/480p/1080i/720p)
Acceptable computer signals
fH: 19 to 72 kHz
fV: 48 to 92 Hz
Speaker Stereo speakers system, 33 mm (1 5/16 inches) diameter, max. 2 W × 2

Input/Output

Video input VIDEO: phono type
Composite video: 1 Vp-p ± 2 dB sync negative (75 ohms terminated)
S VIDEO: Y/C mini DIN 4-pin type (male)
Y (luminance): 1 Vp-p ±2 dB sync negative (75 ohms terminated)
C (chrominance): burst 0.286 Vp-p ±2 dB (NTSC) (75 ohms terminated), burst 0.3 Vp-p ±2 dB (PAL) (75 ohms terminated)
AUDIO Stereo minijack
500 mVrms, impedance more than 47 kilohms
PJ MULTI 32-pin multi connector
Analog RGB/component:
R/CR (PR): 0.7 Vp-p ±2 dB (75 ohms terminated)
G: 0.7 Vp-p ±2 dB (75 ohms terminated)
G with sync/Y: 1 Vp-p ±2 dB sync negative (75 ohms terminated)
B/CB (PB): 0.7 Vp-p ±2 dB (75 ohms terminated)
SYNC/HD: Composite sync input: 1-5 Vp-p high impedance, positive/ negative
Horizontal sync input: 1-5 Vp-p high impedance, positive/ negative
VD: Vertical sync input: 1-5 Vp-p high impedance, positive/ negative
"Memory Stick" slot 1

General

Dimensions 340 × 154 × 300 mm (13 1/2 × 6 1/8 × 11 7/8 inches) (w/h/d)
Mass Approx. 3.9 kg (8 lb 10 oz)
Power requirements
AC 100 to 240 V, 1.9-0.8 A, 50/60 Hz
Power consumption
Max. 190 W
(Standby mode: 5 W)
Supplied accessories
Remote control RM-PJHS1 (1)
Size AA (R6) batteries (2)
Signal interface cable SIC-HS10 (5 m) (1)
AC power cord (1)
Air filter (for replacement) (1)
Lens cap (1)
Operating Instructions (1)

Design and specifications are subject to change without notice.

Optional accesories

Signal interface unit IFU-HS1
Projector stand SU-HS1
Signal interface cable
SIC-HS10 (5 m)
SIC-HS20 (5 m)
SIC-HS30 (5 m)
SIC-HS40 (5 m)
Projector Lamp LMP-H120 (for replacement)
Air filter PK-HS1FL (for replacement)

Projection Distances for a 720p format signal, computer's signal, etc.

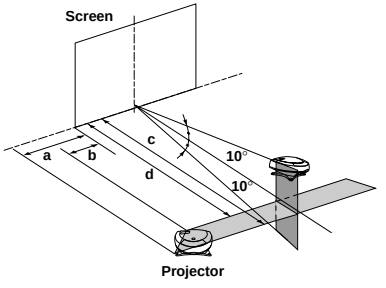

When projecting a 720p format signal

Unit: m (feet)

Screen size (inches)	40	60	80	100	120	150
a	0.3 (1.0)	0.5 (1.6)	0.7 (2.3)	0.9 (3.0)	1.1 (3.6)	1.3 (4.3)
b	0.1 (0.3)	0.2 (0.7)	0.3 (1.0)	0.4 (1.3)	0.5 (1.6)	0.6 (2.0)
c	2.0 (6.6)	3.0 (9.8)	4.0 (13.1)	5.1 (16.7)	6.1 (20.0)	7.6 (24.9)
d	1.8 (5.9)	2.7 (8.9)	3.6 (11.8)	4.5 (14.8)	5.4 (17.7)	6.8 (22.3)

When projecting a computer's signal or data stored in a "Memory Stick"

Unit: m (feet)

Screen size (inches)	40	60	80	100	120	150
a	0.1 (0.3)	0.1 (0.3)	0.2 (0.7)	0.3 (1.0)	0.4 (1.3)	0.4 (1.3)
b	0 (0)	0 (0)	0 (0)	0 (0)	0 (0)	0 (0)
c	1.8 (5.9)	2.8 (9.2)	3.7 (12.1)	4.7 (15.4)	5.6 (18.4)	7.0 (23.0)
d	1.6 (5.2)	2.5 (8.2)	3.3 (10.8)	4.2 (13.8)	5.0 (16.4)	6.3 (20.7)

Others

Input signals and adjustable/setting items

Some of the items in the menus cannot be adjusted depending on the input signal.

PICTURE CTRL menu

Item	Input signal			
	Video or S video (Y/C)	Component	Video GBR	Computer/MS
CONTRAST	●	●	●	●
BRIGHT	●	●	●	●
COLOR	● (except for B & W)	●	●	–
HUE	● (NTSC3.58/4.43 only, except for B & W)	●	●	–
SHARP	●	●	●	–
RGB ENHANCER	–	–	–	
D. PICTURE	●	● (15k RGB only)	● (15k RGB only)	–
GAMMA MODE	–	–	● (15k RGB only)	●
COLOR TEMP	●	●	●	●
COLOR SYS	●	–	–	–
VOLUME	●	●	●	●

● : Adjustable/can be set
– : Not adjustable/cannot be set

INPUT SETTING menu

Item	Input signal				
	Video or S video (Y/C)	Component	Video GBR	Computer	MS
DOT PHASE	–	– (except for HDTV)	– (except for HDTV)	●	–
SIZE H	–	– (except for HDTV)	– (except for HDTV)	●	–
SHIFT	●	●	●	●	–
SCAN CONV	–	–	–	● (lower than VGA)	–
ASPECT	●	● (except for preset memory numbers 5, 45, 47, 48 and 50 of HDTV)	● (except for preset memory numbers 5, 45, 47, 48 and 50 of HDTV)	–	–
VIDEO MEMORY	●	●	●	●	–

● : Adjustable/can be set
– : Not adjustable/cannot be set

Preset Signals

Memory No.	Preset signal		fH (kHz)	fV (Hz)	Sync	SIZE
1	Video 60 Hz		15.734	59.940	—	—
2	Video 50 Hz		15.625	50.000	—	—
3	15k RGB/Component 60 Hz		15.734	59.940	SonG/Y or Composite Sync	—
4	15k RGB/Component 50 Hz		15.625	50.000	SonG/Y or Composite sync/ Composite video	—
5	1080/60i, 1035/60i (DTV)		33.750	60.000	SonG/Y	1800
6	640 × 350	VGA mode 1	31.469	70.086	H-pos, V-neg	800
7		VGA VESA 85Hz	37.861	85.080	H-pos, V-neg	832
8	640 × 400	PC-9801 Normal	24.823	56.416	H-neg, V-neg	848
9		VGA mode 2	31.469	70.086	H-neg, V-pos	800
10		VGA VESA 85Hz	37.861	85.080	H-neg, V-pos	832
11	640 480	VGA mode 3	31.469	59.940	H-neg, V-neg	800
12		Macintosh 13”	35.000	66.667	H-neg, V-neg	864
13		VGA VESA 72Hz	37.861	72.809	H-neg, V-neg	832
14		VGA VESA 75Hz	37.500	75.000	H-neg, V-neg	840
15		VGA VESA 85Hz	43.269	85.008	H-neg, V-neg	832
16	800 × 600	SVGA VESA 56Hz	35.156	56.250	H-pos, V-pos	1024
17		SVGA VESA 60Hz	37.879	60.317	H-pos, V-pos	1056
18		SVGA VESA 72Hz	48.077	72.188	H-pos, V-pos	1040
19		SVGA VESA 75Hz	46.875	75.000	H-pos, V-pos	1056
20		SVGA VESA 85Hz	53.674	85.061	H-pos, V-pos	1048
21	832 × 624	Macintosh 16”	49.724	74.550	H-neg, V-neg	1152
22	1024 × 768	XGA VESA 43Hz	35.522	43.479	H-pos, V-pos	1264
23		XGA VESA 60Hz	48.363	60.004	H-neg, V-neg	1344
24		XGA VESA 70Hz	56.476	70.069	H-neg, V-neg	1328
25		XGA VESA 75Hz	60.023	75.029	H-pos, V-pos	1312
26		XGA VESA 85Hz	68.677	84.997	H-pos, V-pos	1376
43	480/60p (Progressive component)		31.470	60.000	SonG/Y	—
44	525/50p (Progressive component)		31.250	50.000		—
45	1080/50i (DTV)		28.130	50.000		2000
47	720/60p (DTV)		45.000	60.000		2150
48	720/50p (DTV)		37.500	50.000		2342
50	540/60p		33.750	60.000		1796

Notes

- Whan a signal other than the preset signals shown above is input, the picture may not appear properly.
- The signal from the Memory Stick is displayed as No. 53 to 60.

Warning on power connection

Use a proper power cord for your local power supply.

	The United States, Canada	Continental Europe	UK	Australlia	Japan
Plug type	YP-11	YP-21	SP-61	B8	YP-13
Female end	YC-13L	YC-13L	YC-13L	C7-2	YC-13L
Cord type	SPT-2	H03VVH2-F	H03VVH2-F	H03VVH2-F	VCTFK
Rated Voltage & Current	10A/125V	2.5A/250V	2.5A/250V	2.5A/250V	7A/125V
Safety approval	UL/CSA	VDE	BS	SAA	DENANHO

Location of Controls

Front

You can use the buttons on the control panel with the same names as those on the remote control to operate the projector.

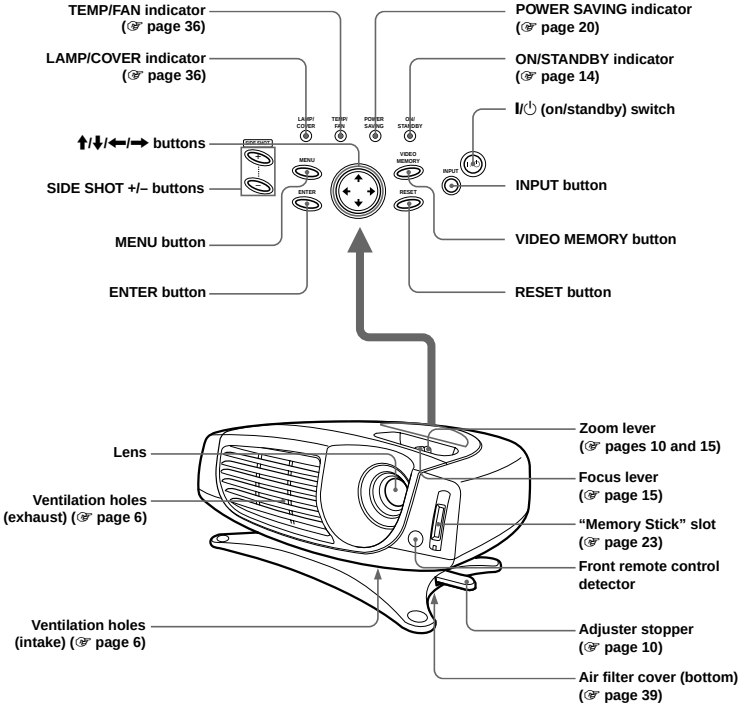

Rear

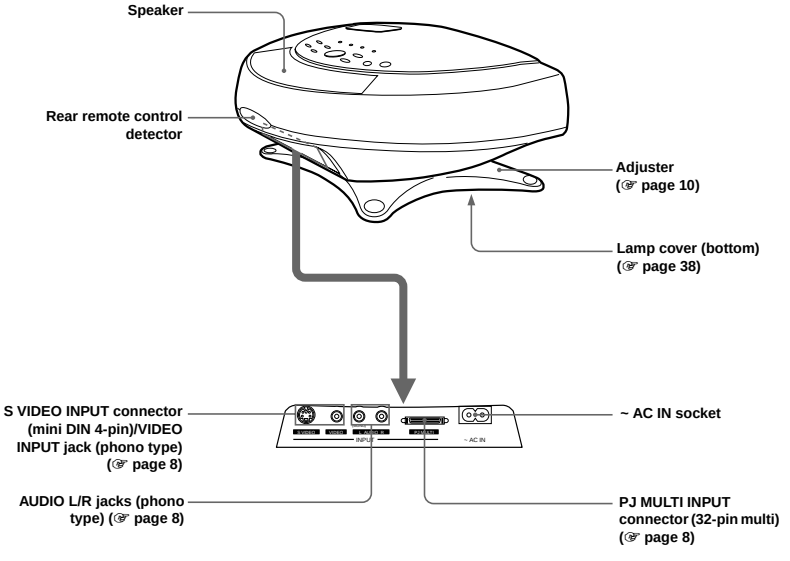

Others

Others

Remote control

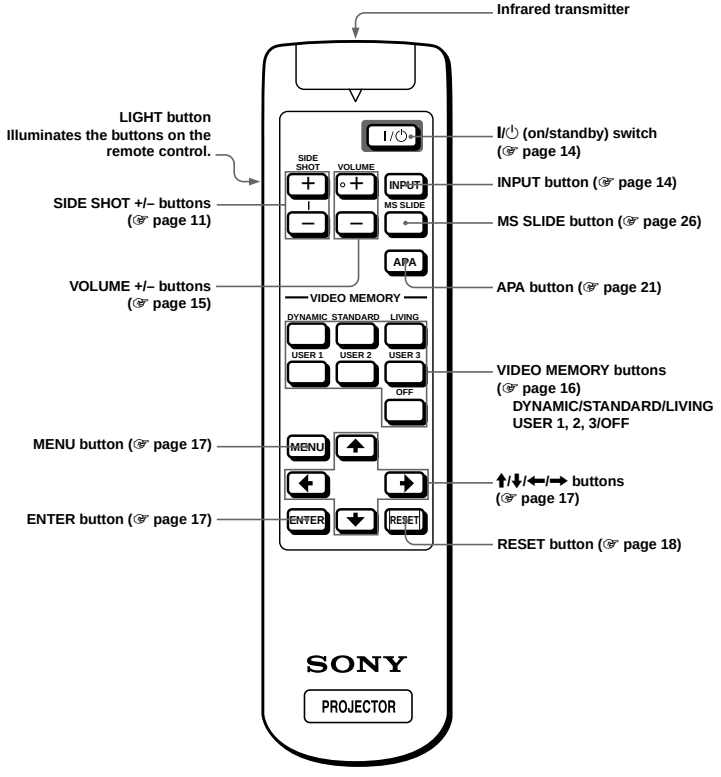

Index

SONY

4-085-351-**01** (1)

Projector Stand

お買い上げいただきありがとうございます。

⚠警告 安全のための注意事項を守らないと、人身事故になることがあります。

この組み立て説明書には、事故を防ぐための重要な注意事項と製品の取り扱いかたを示してあります。**この組み立て説明書をよくお読みのうえ、**製品を安全にお使いください。お読みになったあとは、いつでも見られるところに必ず保管してください。

SU-HS1

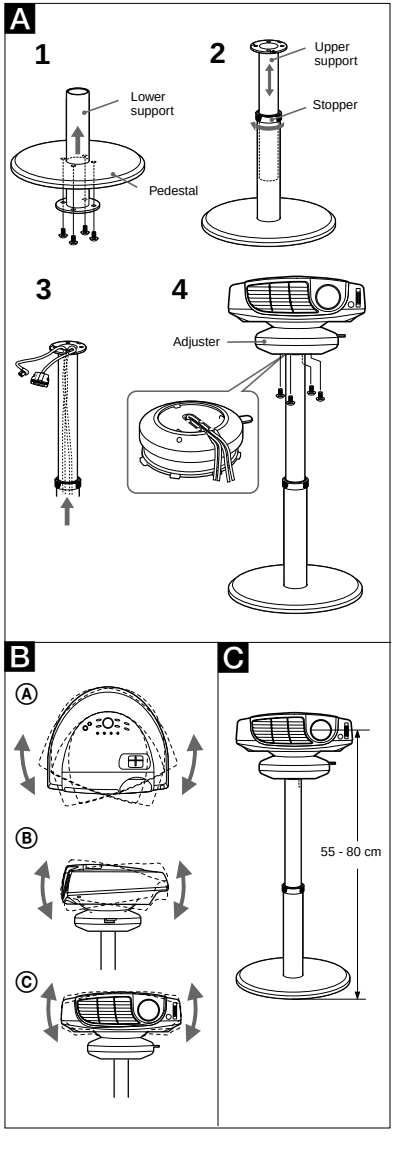

English

The SU-HS1 is a Projector Stand for the LCD Video Projector only. Assemble the Projector Stand and adjust it as follows:

Assembling the Projector Stand A

Before assembling

Remove the adjuster mounted on the LCD Video Projector. To remove it, refer to the Video Projector Operating Instructions.

1. Pass a lower support part through the hole of a pedestal, then fix it with the supplied 4 long screws.
2. Mount a upper support part and stopper to the lower support part and adjust it height, then fix it.
3. Pass a AC power cord and PJ Multi cable through the supports.
   Pull out the cables from the top of the upper support for 20 to 30 cm so that they reach to the projector.
4. Store the cables into the groove at the back of the adjuster, and fix the adjuster to the support with the four short screws.
5. Connect the cables passed through the supports to the projector.

Adjusting the adjuster B

Using the adjuster of the projector stand, you can adjust the projecting picture position.
Hold down and slide the adjuster stopper to the right, move the projector, then replace the stopper.

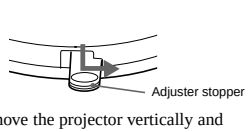

You can move the projector vertically and horizontally within the following ranges:
Ⓐ Up to 20° each for horizontal angle
Ⓑ Up to 10° each for vertical angle
Ⓒ Up to 2° each for tilting angle

Adjusting the height of the supports C

You can adjust the height of the supports within the following range:
55 to 80 cm (Distance between the center of the lens and the floor)

Specifications

Dimensions: 420 × 420 × 750mm (W × D × H)
Mass: Approx. 5.5 kg (13 lb)

SONY

4-085-602-**02** (1)

Signal Interface Unit

シグナルインターフェースユニット

取扱説明書
Operating instructions
Mode d'emploi
Bedienungsanleitung
Instrucciones de uso
Istruzioni per l'uso
使用说明书

IFU-HS1

 Printed in China

English

Connection (Connecting with a TV Game or VCR Equipment or 15k RGB/Component Equipment)

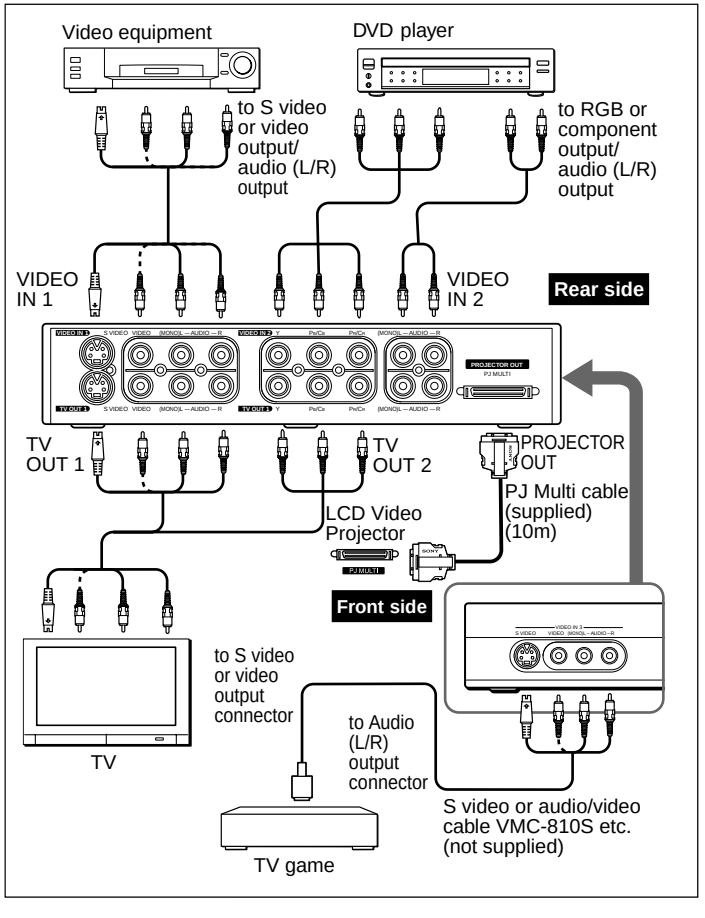

How to Use

INPUT: Press INPUT select switch to select a equipment connected to the Signal Interface Unit.
OUTPUT: Select TV/PROJECTOR select switch to suite your preference.

Specifications

Dimensions: 230 × 90 × 50 mm (without the cable) (W × D × H)
Mass: Approx. 850 g (1 lb 12 oz)

Supplied Accessory

Multi cable 10 m (length)

Section 2
Service Informations

2-1. Board Layout

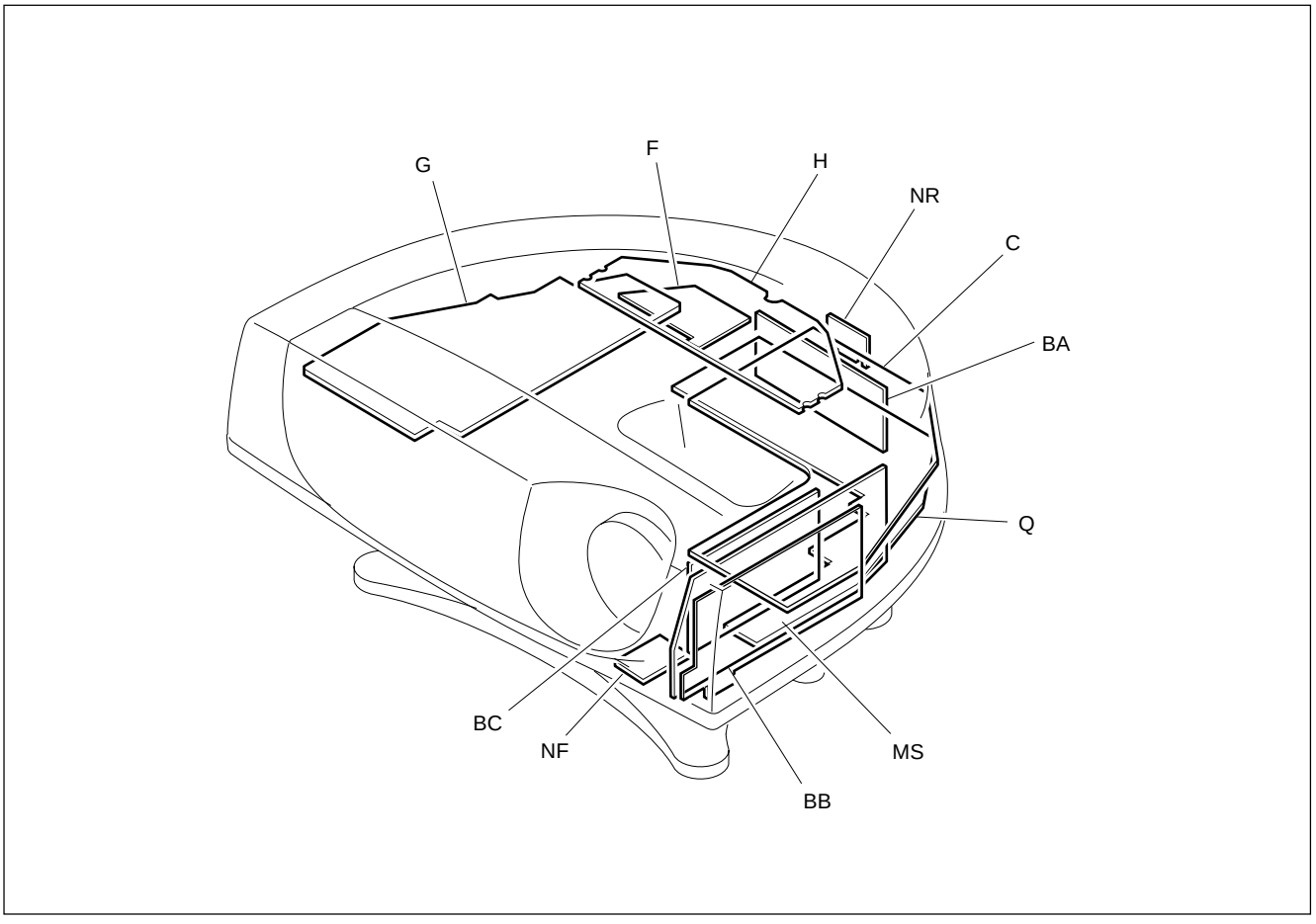

2-2. Disassembly and Extension Boards

2-2-1. Hood Block Assy Removal

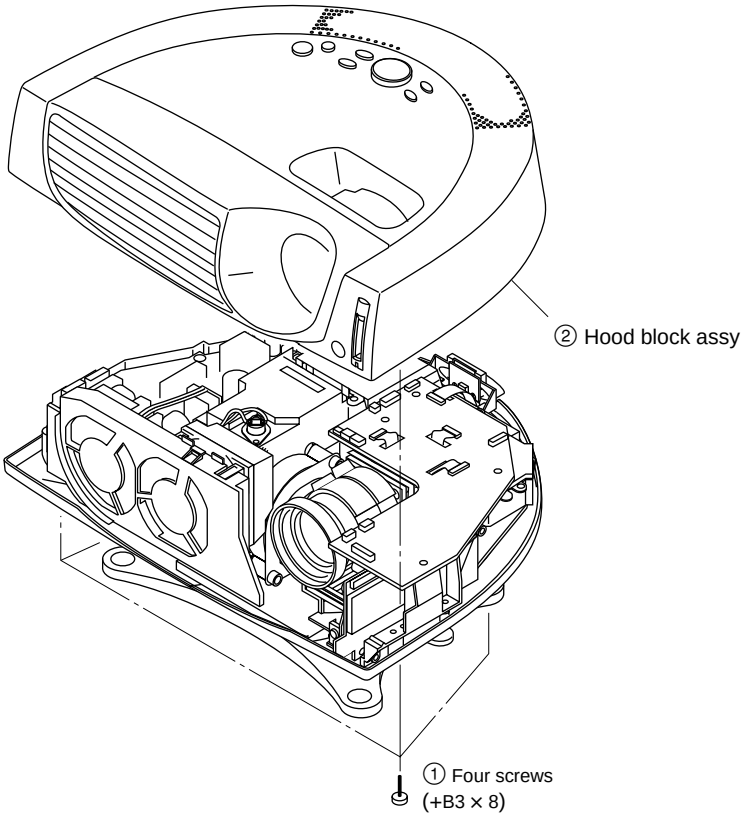

2-2-2. H Board Removal

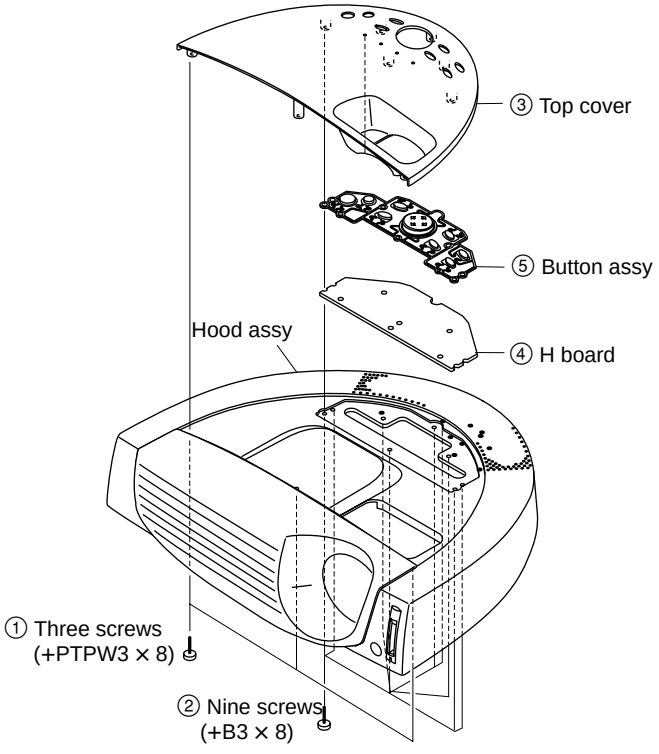

2-2-3. C Board Removal

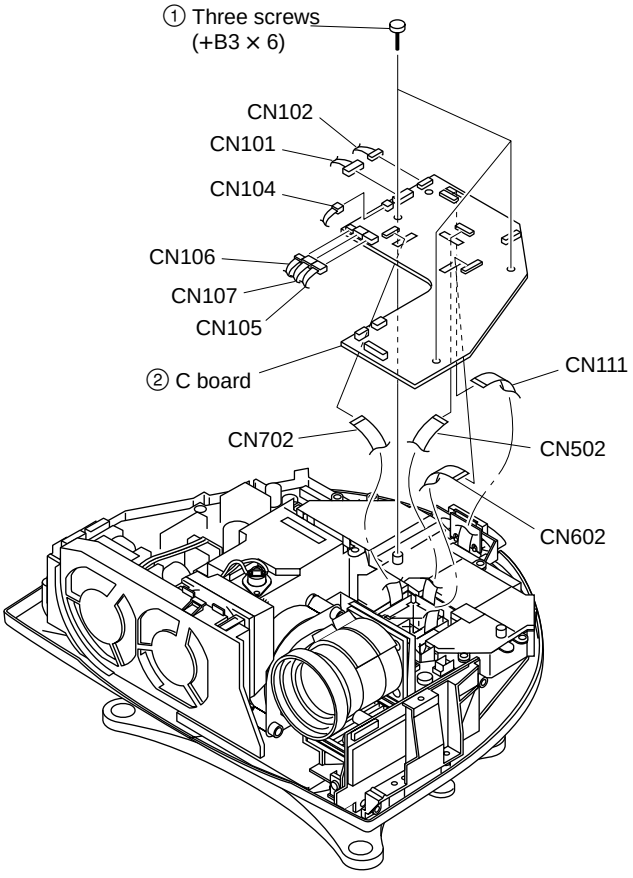

2-2-4. MS Board Removal

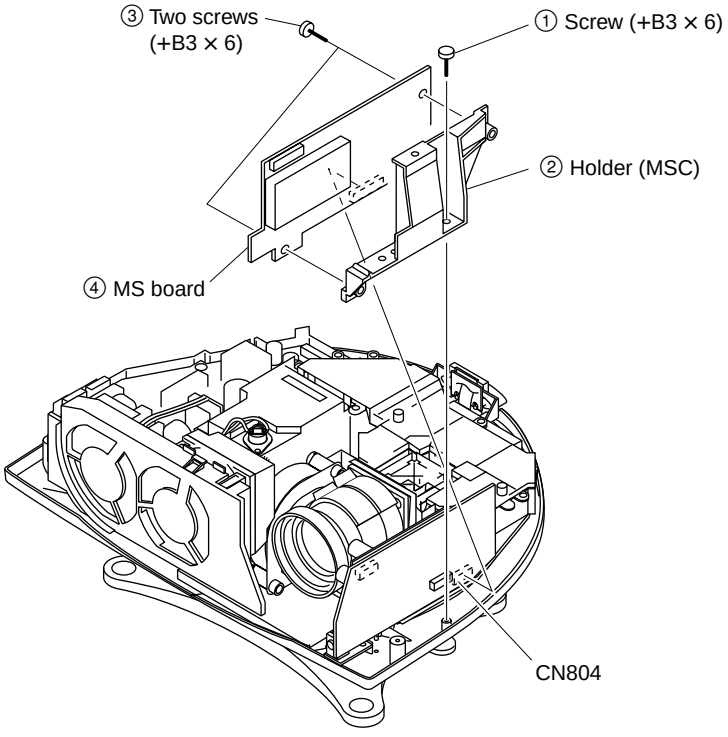

2-2-5. BB and NF Boards Removal

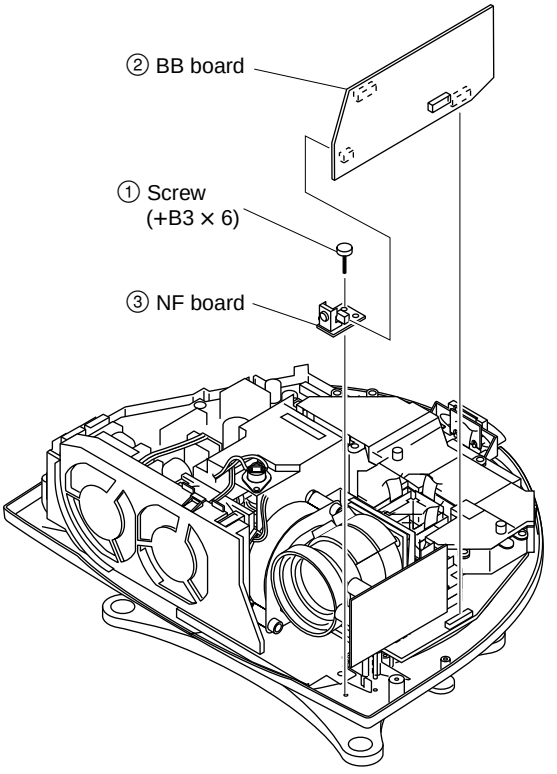

2-2-6. BC Board Removal

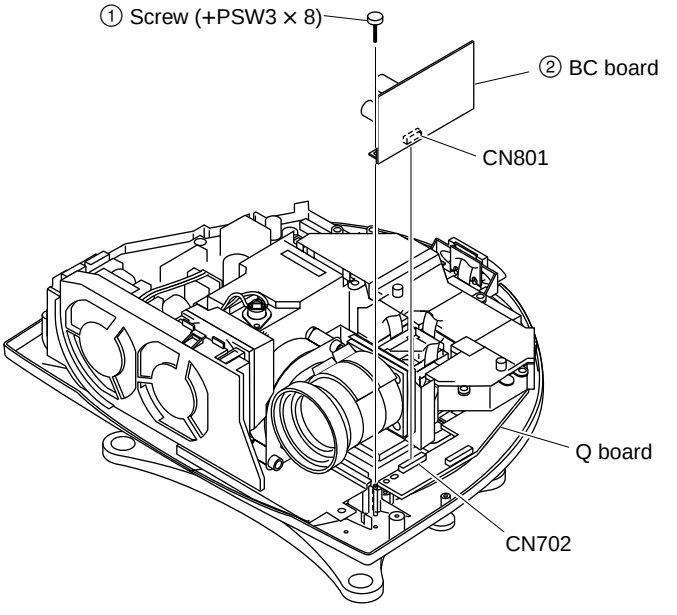

2-2-7. Optics block assy Removal

∗ Remove the C board. (Refer to Sec.2-2-3.)
∗ Remove the MS board. (Refer to Sec.2-2-4.)
∗ Remove the BB and NF boards. (Refer to Sec.2-2-5.)

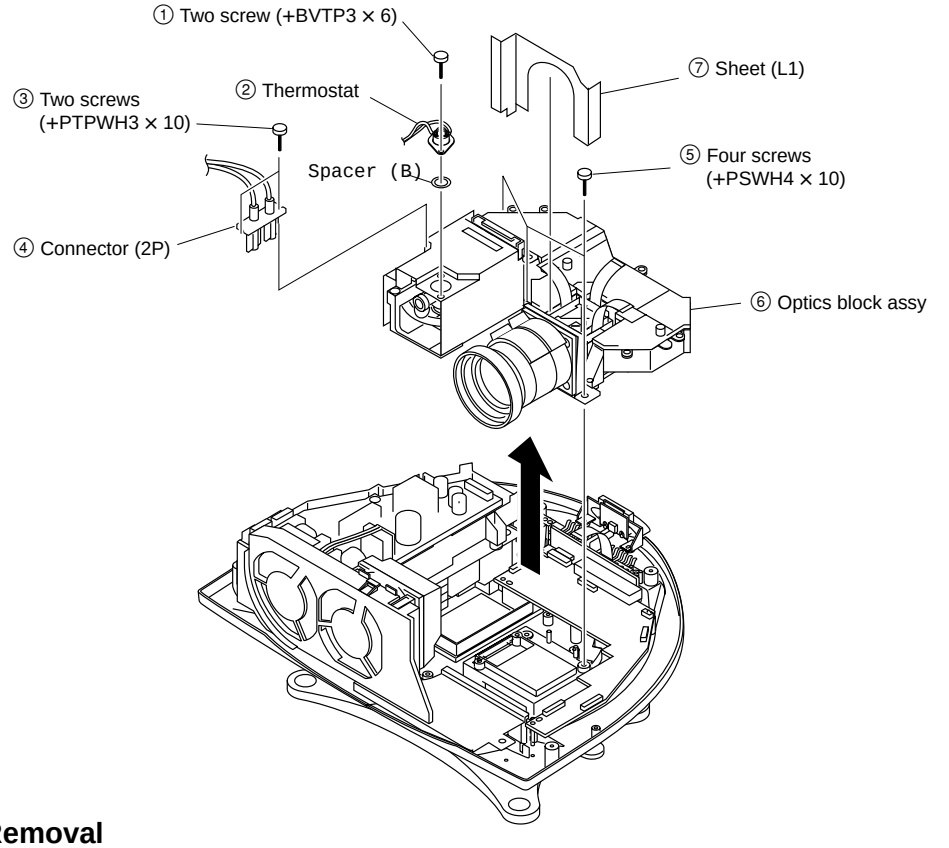

2-2-8. Q Board Removal

∗ Remove the Optics block assy. (Refer to Sec.2-2-7.)

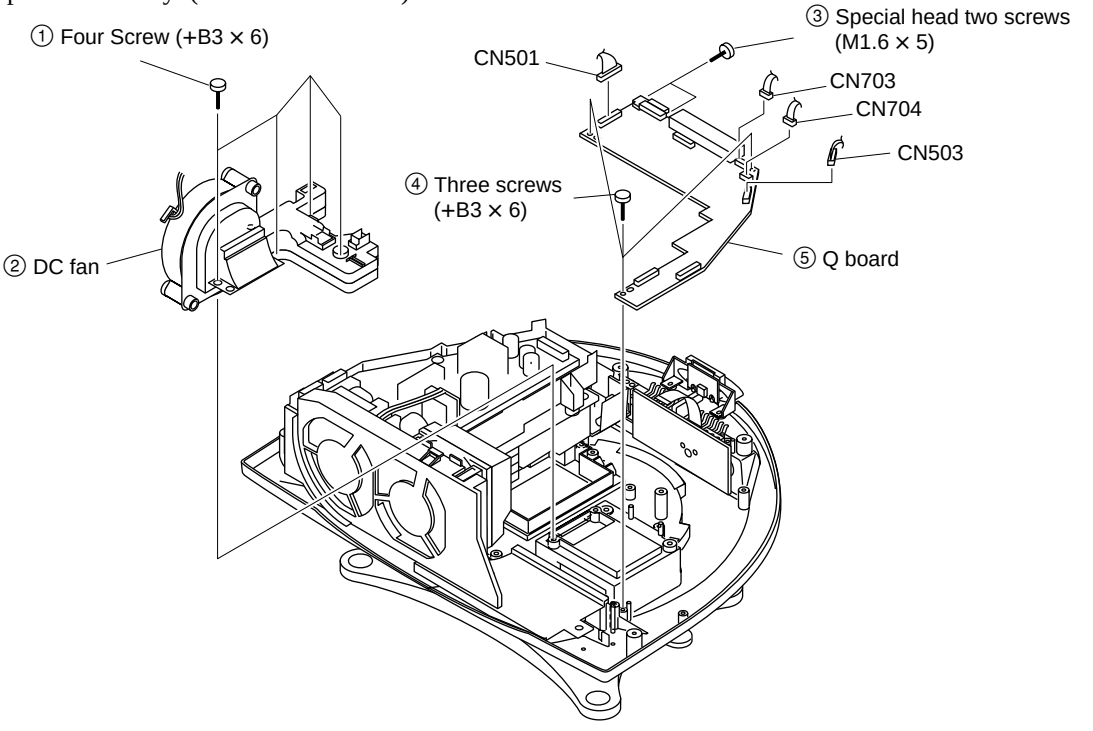

2-2-9. BA Board Removal

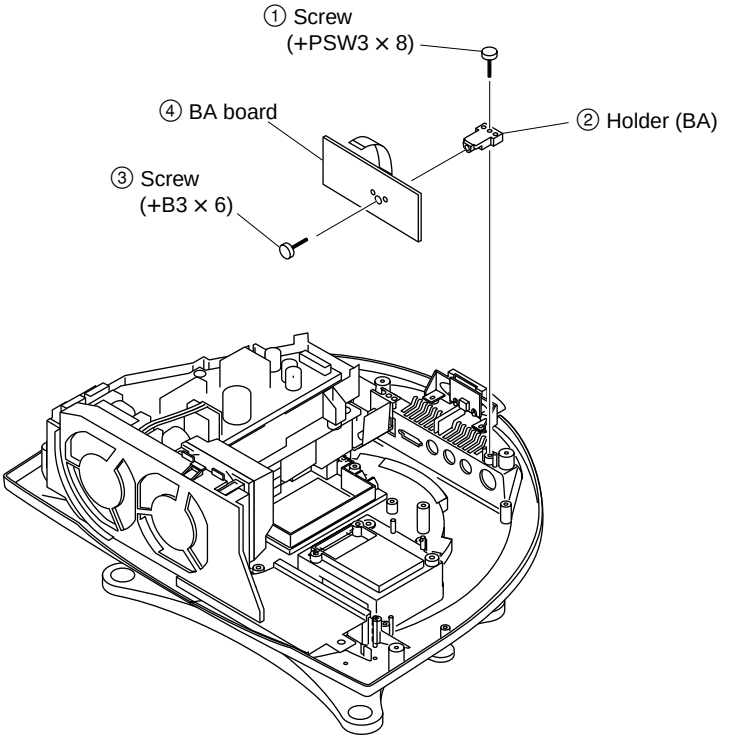

2-2-10. NR Board Removal

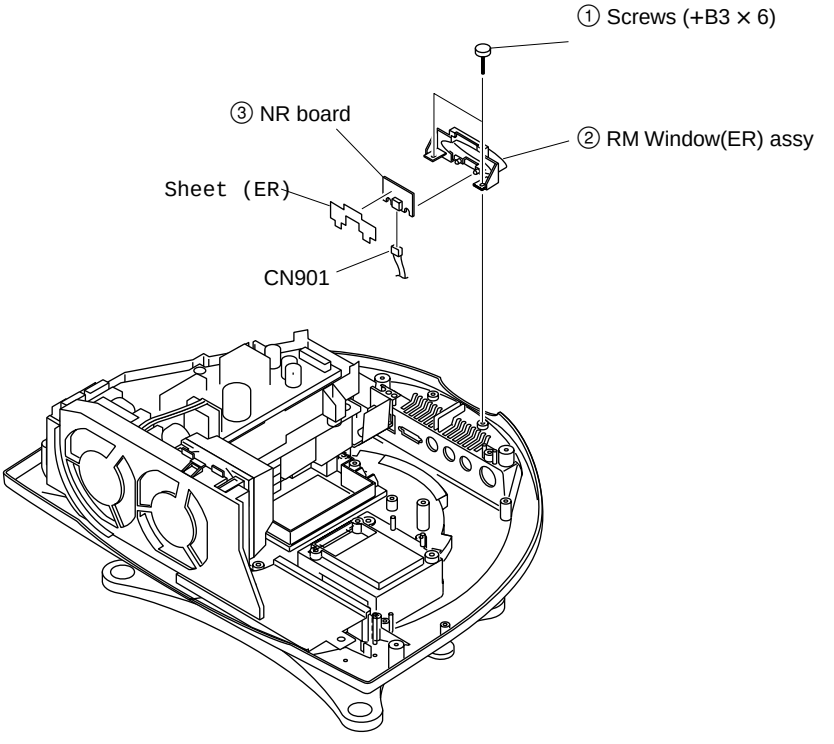

2-2-11. F Board Removal

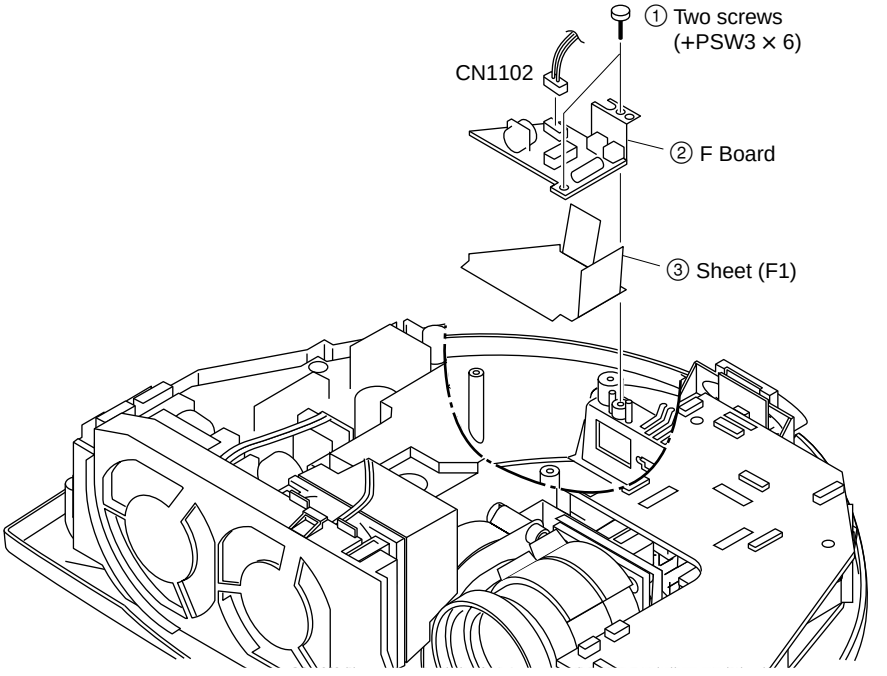

2-2-12. Hi-voltage block and G Board Removal

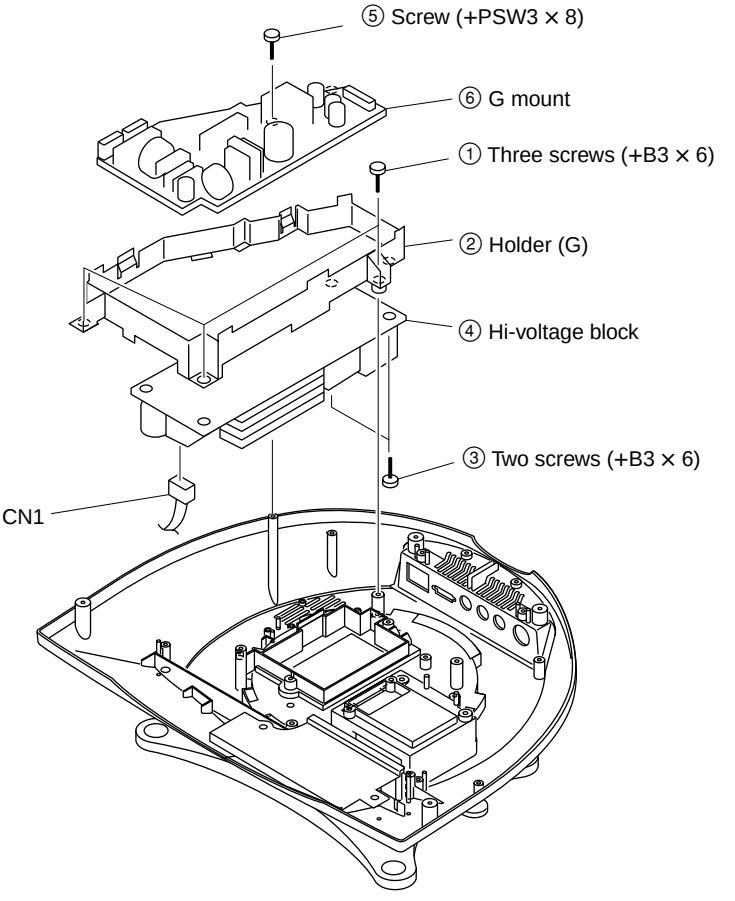

2-2-13. Projection Lens Removal

∗ Remove the Optics block assy. (Refer to Sec.2-2-7.)

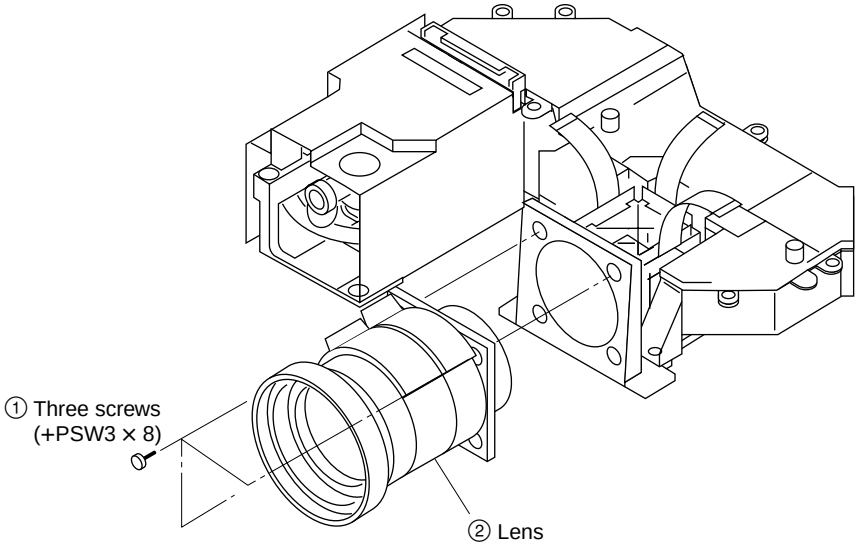

2-2-14. Prism Block Assy and In-polarizer Removal

∗ Remove the Projection Lens. (Refer to Sec.2-2-13.)

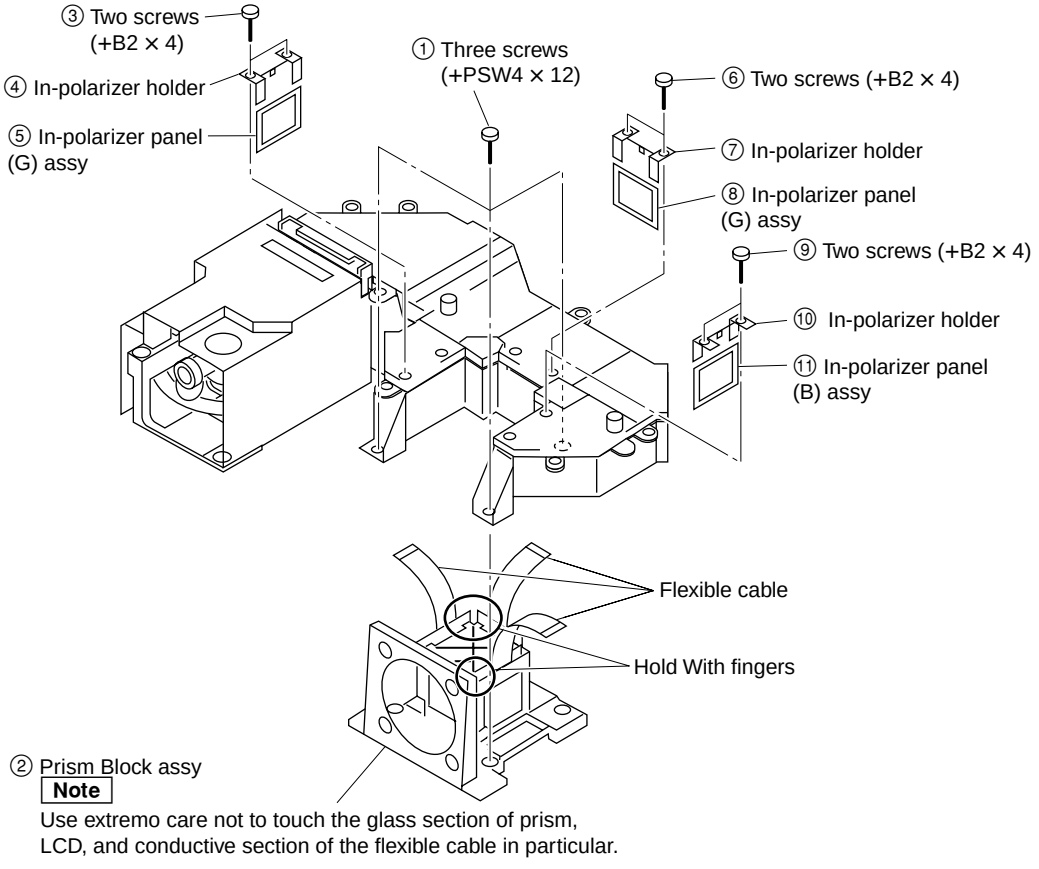

Note

Use extremo care not to touch the glass section of prism, LCD, and conductive section of the flexible cable in particular.

2-2-15. Extension Boards and Extension Cables

X KIT ASSY(A-1502-036-A)

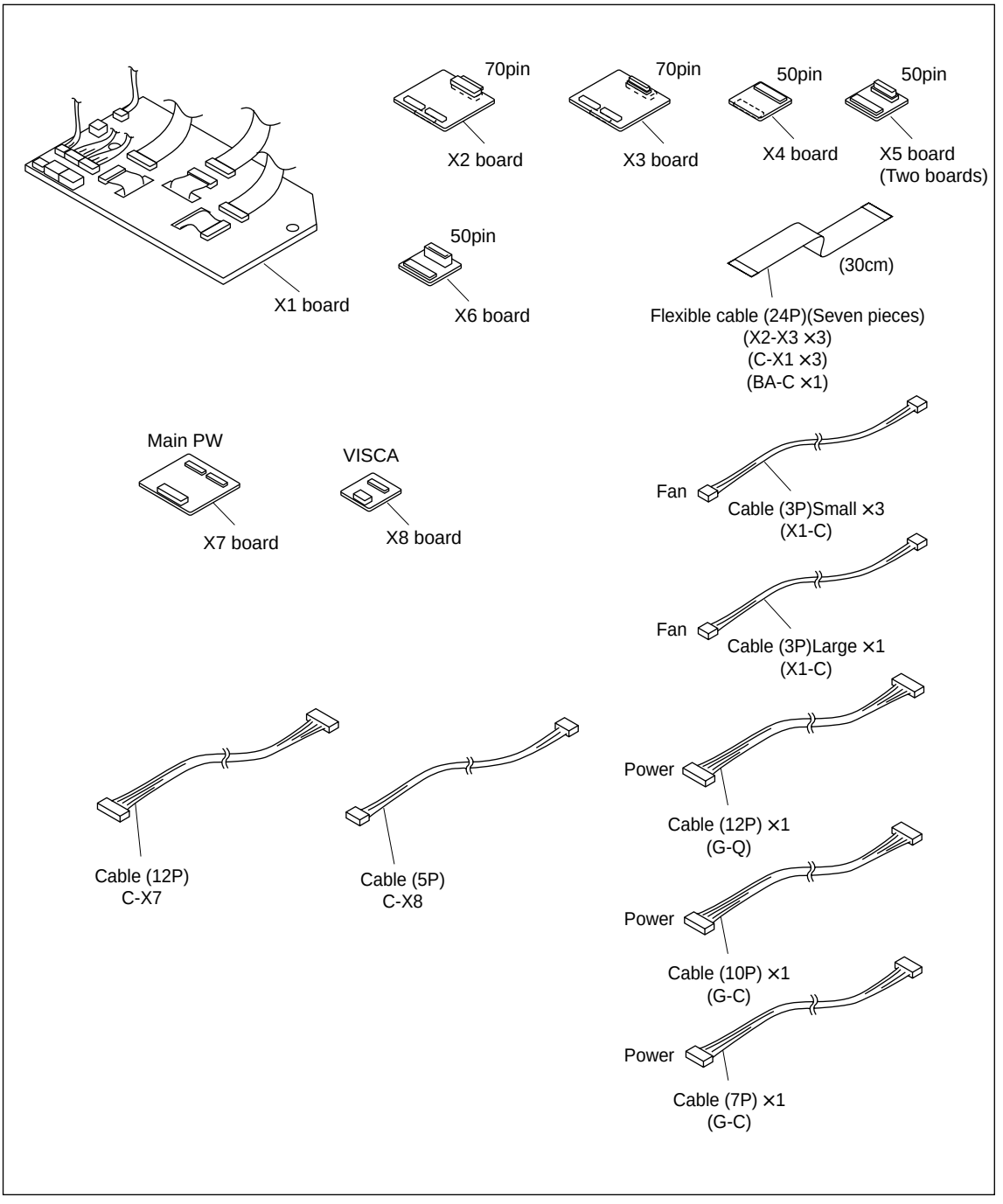

2-2-16. Extension Boards and Extension Cables Connecti

(1) BC Board

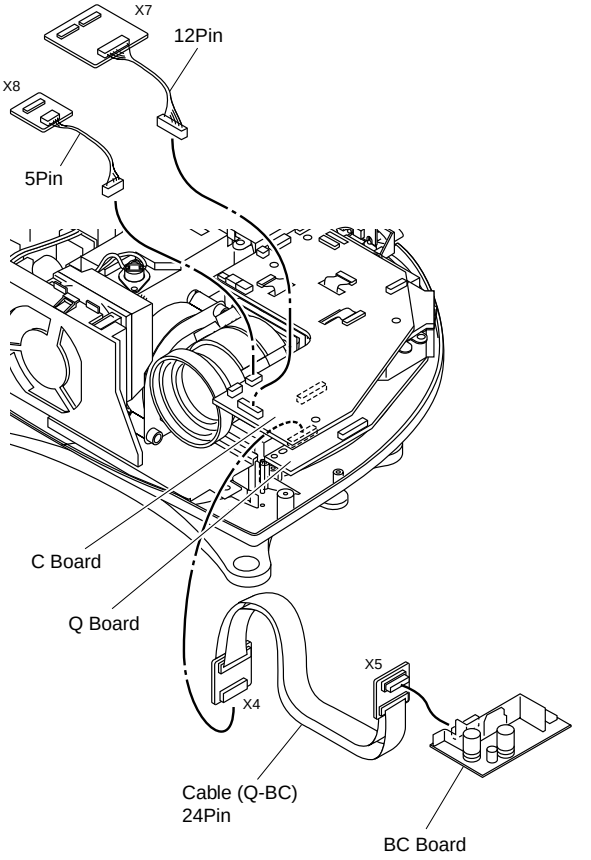

(2) BB and MS Boards

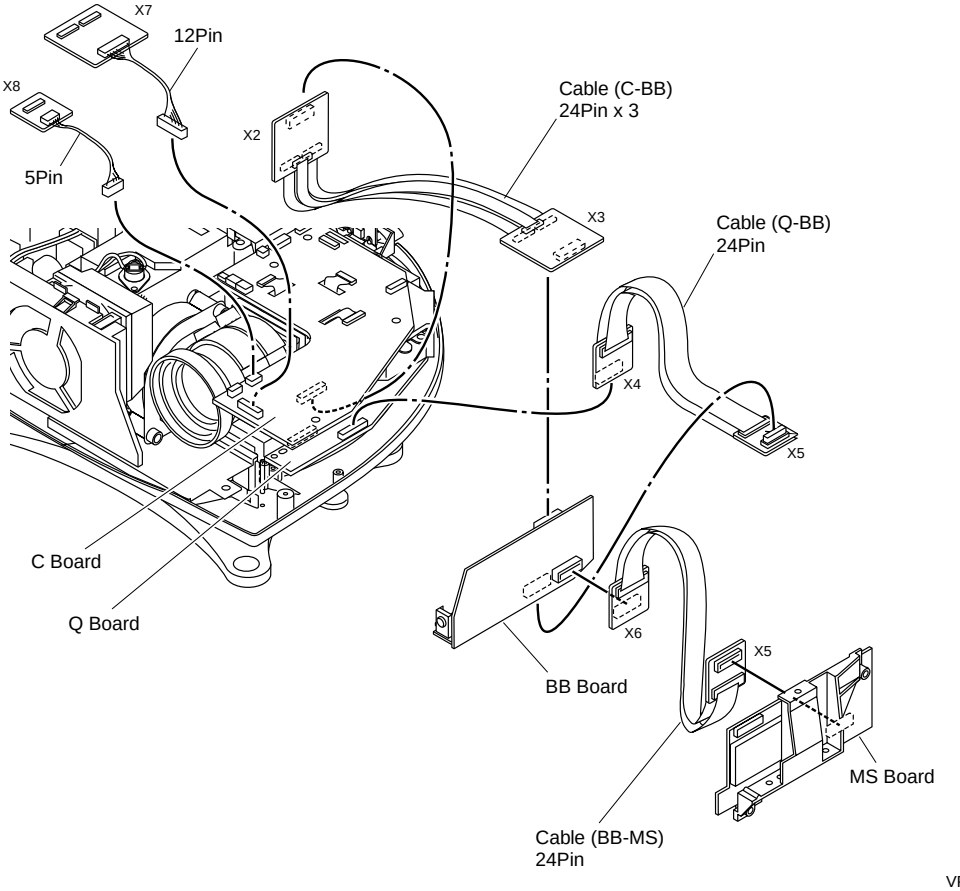

(3) C Board

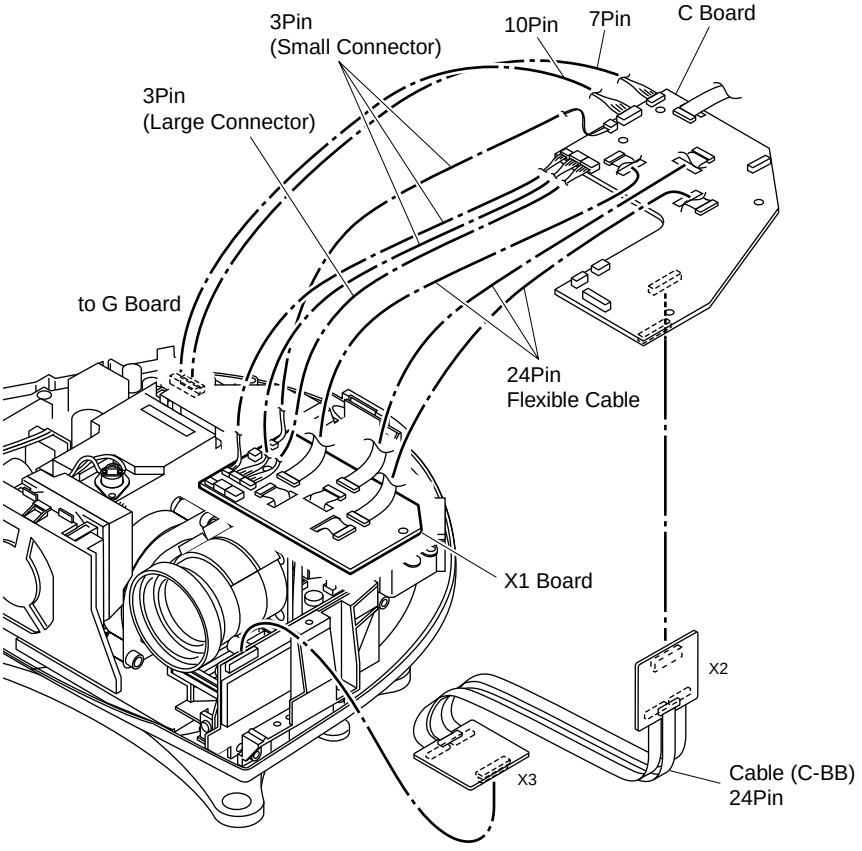

(4) BA Board

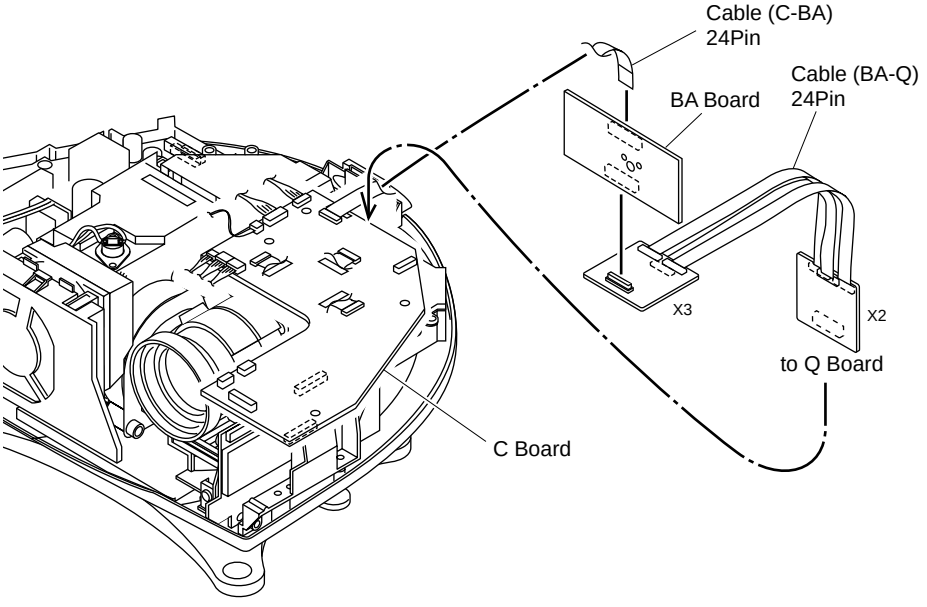

(5) Q Board

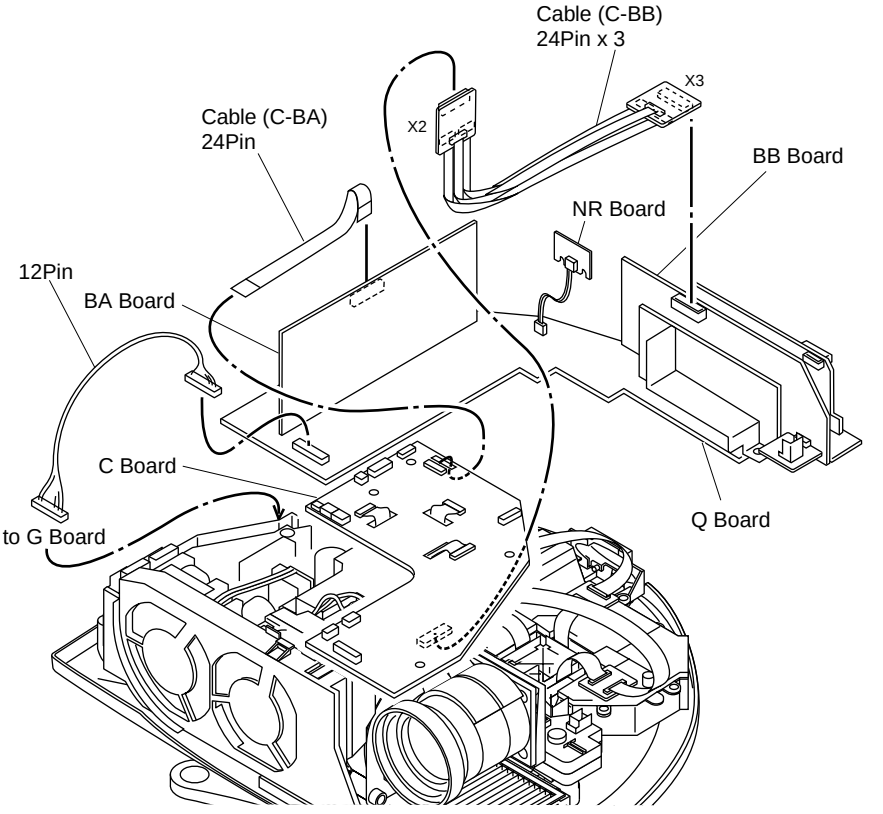

2-3. Power Cord

Use a proper power cord for your local power supply.

	The United States, Canada	Continental Europe	UK	Australia	Japan
Plug type	YP-11	YP-21	SP-61	B8	YP-13
Female end	YC-13L	YC-13L	YC-13L	C7-2	YC-13L
Cord type	SPT-2	H03VVH2-F	H03VVH2-F	H03VVH2-F	VCTFK
Rated Voltage & Current	10 A/125 V	2.5 A/250 V	2.5 A/250 V	2.5 A/250 V	7 A/125 V
Safety approval	UL/CSA	VDE	BS	SAA	DENNANHO

1)Use the correct Plug for your country.

Section 3
Electrical Adjustments

3-1. Preparations

3-1-1. Equipment Required

- Oscilloscope
  Tektronix 2465 or equivalent
  (bandwidth: 350 MHz or more)
- NTSC, PAL, SECAM component signal generator
  Tektronix TG2000 + AVG1 (optional module) + AWVG1 (optional module) or equivalent
- VG (Programmable video signal generator)
  VG814 or equivalent
- Digital voltmeter
  Advantest TR6845 or equivalent
- Luminance meter
- Chrominance difference gauge

Note

Perform the following adjustments at least 5 minutes after turning on the power.

3-1-2. Optical Unit Adjustment

Drive the cooling fan and turn on the lamp.

1) Mirror Adjustment

Set the screen size to 80-inch at the wide-end.

1. Set the unit in green-only.
2. Adjust the blanking sections at the top, bottom, left, and right for minimum by moving the adjusting plate of the G dichromatics mirror.
3. Tighten the adjusting plate fixing screws.
4. Set the unit in cyan.
5. Adjust the blanking sections at the top, bottom, left, and right for minimum by moving the adjusting plate of the RB mirror, and then maximize the intensity of the blue.
6. Tighten the adjusting plate fixing screws.
7. Set the unit in all white.
8. Adjust the blanking sections at the top, bottom, left, and right for minimum by moving the adjusting plate of the RB mirror, and then maximize the intensity of the red.
9. Tighten the adjusting plate fixing screws.
10. Secure the six adjusting plate fixing screws using a torque screwdriver.
    Tightening torque: 8 kgf/cm
11. Make sure that the deviation of the lighting range is within the specific range.

3-1-3. Factory Mode Setting

1. Make sure that the MENU is indicated.
2. Exit the menu.
3. Press the keys in the following order:
   "ENTER" → "ENTER" → "LEFT" → "ENTER"
4. The message "Do you wish to enter into the FACTORY MODE? Yes:↑ No:↓ " will be displayed.
5. Select "Yes:↑".

Note

- When leaving the FACTORY MODE, perform item 3. "Do you wish to return to the USER MODE? Yes:↑ No:↓ " will be displayed. Select "Yes:↑".
- Cannot enter FACTORY MODE by MS channel.

3-2. V-COM Adjustment

1. Input the green-only 30 IRE all white signal to INPUT-A.
2. Set the CONTRAST to 80, BRIGHT to 50 and COLOR TEMP to MID.
3. Set the screen to G VCOM adjustment of "Device Adjust."
   Adjust the G VCOM so that the vertical line on the screen is minimum.
4. Input the red-only and blue-only 30 IRE all white signal respectively and adjust R VCOM and B VCOM respectively so that the vertical line becomes minimum.
5. Save the value adjusted.

3-3. Adjustment Item Initialize Data

MenuTitle	ItemName	SET MEMORY	CH MEMORY			CH MEMORY			STATUS MEMORY
			VIDEO 1	S Video 1	INPUT-A	VIDEO 2	S Video 2	MS	
PICTURE CTRL	CONTRAST		80	80	80	80	80	80	
	BRIGHT		50	50	50	50	50	50	
	COLOR		50	50	-	50	50	-	
	HUE		50	50	-	50	50	-	
	SHARP		50	50	-	50	50	-	
	RGB ENHANCER		-	-	30	-	-	30	
	D.PICTURE		OFF	OFF	OFF	OFF	OFF	-	
	GAMMA MODE		-	-	GRAPHICS	-	-	GRAPHICS	
	COLOR TEMP		HIGH	HIGH	HIGH	HIGH	HIGH	HIGH	
	COLOR SYS		AUTO	AUTO	-	AUTO	AUTO	-	
	VOLUE		30	30	30	30	30	30	
INPUT SETTING	DOT PHASE								15 (*)
	SIZE H								*
	SHIFT								*
	SCAN CONV								ON (*)
	ASPECT								4:3 (*)
	BLANKING								0 (*)
	VIDEO MEMORY								OFF
SET SETTING	STATUS	ON							
	INPUT-A	COMPONENT							
	LANGUAGE	ENGLISH							
	POWER SAVING	OFF							
INSTALL SETTING	KEYSTONE MEM.	ON							
	DIGIT KEYSTONE	0							
	KEY DIRECTION	V							
	MENU POSITION	CENTER							
	MENU COLOR	STANDARD							
	MENU BACKGROUND	STANDARD							
	LAMP TIMER	INDICATION ONLY							
INFORMATION	fH	INDICATION ONLY							
	fV	INDICATION ONLY							
	ROM Ver	INDICATION ONLY							
	OPERATION TIMER	INDICATION ONLY							
	PREVIOUS LAMP TIMER	INDICATION ONLY							
W/B ADJUST	GAIN R								
	G								
	B								
	BIAS R								
	G								
	B								

* : "DOT PHASE, SIZE H, SHIFT H/V, SCAN CONV, ASPECT and BLANKING" in the "INPUT SETTING" menu have an initial value respectively in accordance with the input signal (PRESET MEMORY No.).

Note : There are nonadjustable items in accordance with the input signal.

MemoryName												Remarks
W/B MEMORY						VIDEO MEMORY						
VIDEO-HIGH	VIDEO-LOW	VIDEO-MIDDLE	RGB-HIGH	RGB-LOW	RGB-MIDDLE	DYNAMIC	STANDARD	LIVING	USER 1	USER 2	USER 3	
						90	80	70	80	80	80	
						30	50	50	50	50	50	
						70	60	50	50	50	50	
						50	50	50	50	50	50	
						60	60	50	50	50	50	
						0	0	0	0	0	0	
						OFF	OFF	OFF	OFF	OFF	OFF	
						GRAPHICS	GRAPHICS	GRAPHICS	GRAPHICS	GRAPHICS	GRAPHICS	
						MIDDLE	HIGH	LOW	HIGH	HIGH	HIGH	
						AUTO	AUTO	AUTO	AUTO	AUTO	AUTO	
						ON	ON	ON	ON	ON	ON	
						4:3	4:3	4:3	4:3	4:3	4:3	
						0	0	0	0	0	0	
200	200	200	180	180	180							
158	158	200	140	140	180							
200	158	200	180	140	180							
80	80	80	180	80	80							
80	80	80	140	80	80							
80	80	80	140	80	80							

DeviceName	ItemName	MemoryName										Remarks
		SET MEMORY	CHROMA MEMORY							INSTALL MEMORY		
			NT3.58/NT4,43 /BW60	Pal/Pal-M/N/ Secam/BW50	15kRGB	Component (15k)	Two times speed Component	HDTV(YPbPr)	HDTV(GBR) Include two times speed	Top/bottom Inversion	Top/bottom Not Inversion	
RGB MTRX/	CONTRAST	16										
	R DRIVE		9	9	9	9	9	9	9			Fixed Value
	G DRIVE		9	9	9	9	9	9	9			Fixed Value
	B DRIVE		9	9	9	9	9	9	9			Fixed Value
	SUB BRT	54										
	YUV CON		5	5	4	4	4	4	4			
	YUV COL		8	8	7	7	7	7	7			
	SUB HUE		7	9	8	8	8	8	8			
	CTI LVL		2	2	1	1	1	1	1			Fixed Value
	R-Y/R		12	11	11	13	13	12	12			Fixed Value
	R-Y/B		12	13	15	15	15	15	15			Fixed Value
	G-Y/R		7	5	6	8	8	7	6			Fixed Value
	G-Y/B		5	5	5	5	5	6	5			Fixed Value
	SUB SHP		1	1	3	3	3	3	3			Fixed Value
	SHPF0		1	1	1	1	1	1	1			Fixed Value
	PRE OVER		0	0	0	0	0	0	0			Fixed Value
	DMIC PIC	3										Fixed Value
	LTI LVL		1	1	1	1	0	0	0			Fixed Value
D.COM/	VENH	5										Fixed Value
CHROMA/	SHP GAIN		8	8	8	8	8	8	8			Fixed Value
	SHP EQ		0	0	0	0	0	0	0			Fixed Value
	SHP F0		2	2	2	2	2	2	2			Fixed Value
	Y-OUT LVL	51										Fixed Value
	C-OUT LVL	46										Fixed Value
	Y-DL	✻										Fixed Value
	S B-Y ADJ	7										Fixed Value
	S R-Y ADJ	7										Fixed Value
	S-INHBT	0										Fixed Value
	S-ID	0										Fixed Value
	S GP	0										Fixed Value
	S V-ID	0										Fixed Value
	BELL F0	0										Fixed Value
	HPF	0										Fixed Value
P.DRV/	OFFSET R(E)									168	168	Fixed Value
	OFFSET (GE)									168	168	Fixed Value
	OFFSET B(E)									168	168	Fixed Value
	VCOM R									50	50	
	VCOM G									55	55	
	VCOM B									65	65	
	SIG CEN	148										Fixed Value
	CALIB	138										Fixed Value
	INV CONT	1										Fixed Value
	SID LVL	95										Fixed Value
	PRG LVL	215										Fixed Value
SH/	SH1	7										Fixed Value
	SH2 R	227										Fixed Value
	SH2(G)	229										Fixed Value
	SH2 B	227										Fixed Value
VAMP/	CONT(E)	160										
	SUB CON R(E)									128	128	
	SUB CON G(E)									128	128	Fixed Value
	SUB CON B(E)									128	128	
	BRT(E)	195										Fixed Value
	INSTALLATION	0										Fixed Value

Note : There are nonadjustable items in accordance with the input signal.
✻ : Depends on the color system and the input terminal.

DeviceName	ItemName	MemoryName										Remarks
		SET MEMORY	CHROMA MEMORY							INSTALL MEMORY		
			NT358/NT443 /BW60	Pal/Pal-M/N/ Secam/BW50	15kRGB	Component (15k)	Two times speed Component	HDTV(YPbPr)	HDTV(GBR) Include two times speed	Top/bottom Inversion	Top/bottom Not Inversion	
3D GAMMA/	SUB CONT	0										Fixed Value
	SUB BRT	0										Fixed Value
	R OSD LVL	31										Fixed Value
	G OSD LVL	31										Fixed Value
	B OSD LVL	31										Fixed Value
	THROUGH	0										Fixed Value
	SW	1										Fixed Value
	APC THRES	25										Fixed Value
	APC LIMIT	32										Fixed Value
OTHER/	H START	104										Fixed Value
	V START	22										Fixed Value
	H POSITION	23										Fixed Value
	TEMP LAMP	Adjustment is impossible										Fixed Value
	TEMP PANEL	Adjustment is impossible										Fixed Value
	LAMP FAN 1	Adjustment is impossible										Fixed Value
	PANEL FAN 1	Adjustment is impossible										Fixed Value
	LAMP FAN 2	Adjustment is impossible										Fixed Value
	PANEL FAN 2	Adjustment is impossible										Fixed Value
	SYNCHRONOUS	1										Fixed Value
GAMMA		Factory default setting value										

Note : There are nonadjustable items in accordance with the input signal.

3-4. Service Knowhow

3-4-1. After Replacing the Prism Block

1. Perform Section “3-2. V-COM Adjustment.”
2. Perform the Gamma data writing of the Prism Block.
3. Perform Section “3-5. White Balance Adjustment on Servicing.”

3-4-2. After Replacing the Board

- Refer to the cross table shown on right.
- There are no need to perform the adjustment when the board other than the Q board or C board had been replaced.

1) When Replacing the Q Board

When the data before replacement can be read properly

1. Make a note of the data before replacement. After replacement, write the data into the new board with service mode.
2. If the white balance is extremely deteriorated, perform the white balance adjustment (Refer to Section 3-5.).

When the data before replacement cannot be read

1. Perform Section “3-2. V-COM Adjustment.”
2. Perform Section “3-5. White Balance Adjustment on Servicing.”

2) When Replacing the C Board

1. Before replacement, unsolder the IC305 from the replaced C board and then mount it to the new board.
2. Perform Section “3-2. V-COM Adjustment.”
3. If the white balance is extremely deteriorated, perform the white balance adjustment (Refer to Section 3-5.).

3) When Replacing the Other Board

There are no need to perform the adjustment.

Cross Table of Board Replacement

Device Name	Item Name	Board Name	
		BA	C
P.DRV	VCOM (R)	✻	○
	VCOM (G)	✻	○
	VCOM (B)	✻	○
VAMP	CONT (E)	✻	○
	SUB CON R (E)	✻	○
	SUB CON B (E)	✻	○
W/B ADJUST			
INPUT-A HIGH	GAIN R	✻	○
	GAIN G	✻	○
	GAIN B	✻	○
	BIAS R	✻	○
	BIAS G	✻	○
	BIAS B	✻	○
INPUT-A LOW	GAIN R	✻	○
	GAIN G	✻	○
	GAIN B	✻	○
	BIAS R	✻	○
	BIAS G	✻	○
	BIAS B	✻	○
INPUT-A HIGH	GAIN R	✻	○
	GAIN G	✻	○
	GAIN B	✻	○
	BIAS R	✻	○
	BIAS G	✻	○
	BIAS B	✻	○
INPUT-A MID	GAIN R	✻	○
	GAIN G	✻	○
	GAIN B	✻	○
	BIAS R	✻	○
	BIAS G	✻	○
	BIAS B	✻	○
VIDEO MID	GAIN R	✻	○
	GAIN G	✻	○
	GAIN B	✻	○
	BIAS R	✻	○
	BIAS G	✻	○
	BIAS B	✻	○
VIDEO LOW	GAIN R	✻	○
	GAIN G	✻	○
	GAIN B	✻	○
	BIAS R	✻	○
	BIAS G	✻	○
	BIAS B	✻	○

✻ : When down the data before replacement, and then write in the data after the board replacement.
○ : Need adjustment
Value : See description.

3-5. White Balance Adjustment on Servicing

3-5-1. Signal Level Adjustment

1. Input the 80 IRE FLAT FIELD signal to INPUT-A. (COMPONENT)
2. Warm up the unit at least 10 minutes.

3. Enter the Factory Mode (Please refer to 3-1-3)

   Press the keys in the following order.
   "ENTER"→"ENTER"→"←"→"ENTER"
   The message "Do you wish to enter into the FACTORY MODE? Yes:↑ No:↓ " will be displayed.
   Select "Yes:↑".

   Note

   - When leaving the FACTORY MODE, perform item 3.
     "Do you wish to return to the USER MODE? Yes:↑ No:↓ " will be displayed. Select "Yes:↑".
   - Cannot enter FACTORY MODE by MS channel.

4. Set the COLOR TEMP to MID mode.
5. Set the INPUT signal to the 80 IRE FLAT FIELD GREEN-only mode.
6. Change the CONTRAST: MAX to BRIGHT: MAX.
7. Measure the brightness (Ygmax).
8. Change CONTRAST: 80 to BRIGHT: 50.
9. Enter the P. DRV on the MENU screen by the DEV. ADJ.
10. Adjust the brightness to (0.65 × Ygmax) by the VAMP/CONT (E) of P DRV.
11. Change the INPUT signal to 80 IRE FLAT FIELD white signal.
12. Change the CONTRAST: MAX to BRIGHT: MAX.
13. Measure the chromaticity (xmax, ymax)
14. Change CONTRAST: 80 to BRIGHT: 50.
15. Adjust the chromaticity to (xmax ± 0.002, ymax ± 0.004) by the VAMP/SUB CON R(E) or SUB CON B (E) of P. DRV.

3-5-2. White Balance Adjustment

nput the 10 STEP signal to INPUT-A, and observe the chromaticity of each luminance.
When varying the chromaticity of each luminance, perform the following adjustments.

1) MID Mode of INPUT-A

1. Input the 100 IRE FLAT FIELD signal to INPUT-A
2. Measure the chromaticity (x, y)
3. Input the 80 IRE FLAT FIELD signal to INPUT-A.
4. Adjust the chromaticity (x, y) to the values measured in step 2, by the GAIN R and B of W/B MID mode.
5. Set the INPUT signal to the 30 IRE.
6. Adjust the chromaticity (x, y) to the values measured in step 2, by the BIAS R and B.
7. Repeat above steps 3. to 6. until the chromaticity become the following values.
   x ± 0.002, y ± 0.004 (The x and y are the values measured in step 2.)

2) HIGH Mode of INPUT-A

1. Input the 80 IRE FLAT FIELD signal to INPUT-A.
2. Set the GAIN G to MID mode value at "−32" with the HIGH mode of the W/B. And set the GAIN R to MID mode value at "−23".
3. Set the GAIN R and B that are equal to MID mode values. (Set the GAIN R and B to the same as MID mode values.)
4. Set the BIAS R, G and B that are equal to MID mode values. (Set the BIAS R, G and B to the same as MID mode values.)
5. Measure the chromaticity (x, y)
6. Input the 30 IRE signal to INPUT-A.
7. Adjust the chromaticity (x, y) to the values measured in step 2, by the BIAS R and B of W/B HIGH mode.
8. Input the 80 IRE signal to INPUT-A.
9. Adjust the chromaticity (x, y) to the values measured in step 2, by the GAIN R and B.
10. Repeat above steps 6. to 9. until the chromaticity become the following values.
    x ± 0.002, y ± 0.004 (The x and y are the values measured in step 5.)

3) LOW Mode of INPUT-A

1. Input the 80 IRE FLAT FIELD signal to INPUT-A.
2. Set the GAIN G to MID mode value at "−35" with the LOW mode of the W/B.
   Set the GAIN B that is equal to MID mode value at "−30". (Set the GAIN B to the same as MID mode value "−30".)
3. Set the GAIN R that is equal to MID mode value. (Set the GAIN R to the same as MID mode value.)
4. Set the BIAS R, G and B that are equal to MID mode value. (Set the BIAS R, G and B to the same as MID mode value).
5. Measure the chromaticity (x, y).
6. Input the 30 IRE signal to INPUT-A.
7 Adjust the chromaticity (x, y) to the values measured in step 2, by the BIAS R and B of W/B HIGH mode.
8. Input the 80 IRE signal to INPUT-A.
9. Adjust the chromaticity (x, y) to the values measured in step 2, by the GAIN R and B.
10. Repeat above steps 6. to 9. until the chromaticity become the following values.
    $x \pm 0.002$, $y \pm 0.004$ (The x and y are the values measured in step 5.)

4) MID/HIGH/LOW Mode of VIDEO

1. Input the VIDEO signal of NTSC or PAL.
2. Set the BIAS R, G and B and GAIN R, G and B of MID, HIGH and LOW mode of W/B that are equal to the values of corresponding items in INPUT-A. (Altogether 18 items)
3. Set the GAIN G only of MID mode value at "−16" in INPUT-A.

3-6. Memory

Memory structure consists of the following five memory blocks.

1. Set memory
2. Status memory
3. Channel memory
4. Chroma memory
5. W/B memory

CPU internal ROM : 256 kbyte Flash Memory
CPU internal ROM : 16 kbyte
External NVM memory : 8 kbyte EEPROM

Gamma memory is actualized through Gamma mode functions'offsetting the output values to the Contrast and Brightness devices.
When the power plug is connected to the power line (Standby status), all data inside the internal ROM are written into the NVM (Nonvolatile Memory). When the power is turned to on, required data for the current picture, such as status memory data, etc., are selected, and they are written into the internal RAM.
When adjustment is carried out, adjustment data are written into the NVM automatically (items on the user mode) or by the trigger of memory operation (items on the service mode and factory mode), then stored them.
Adjustable items (W/B and Device Adjust) of the service mode and special service mode are memorized into the NVM by the memory operation. At the same time, the factory preset (adjusted) data are all eliminated from the memory.

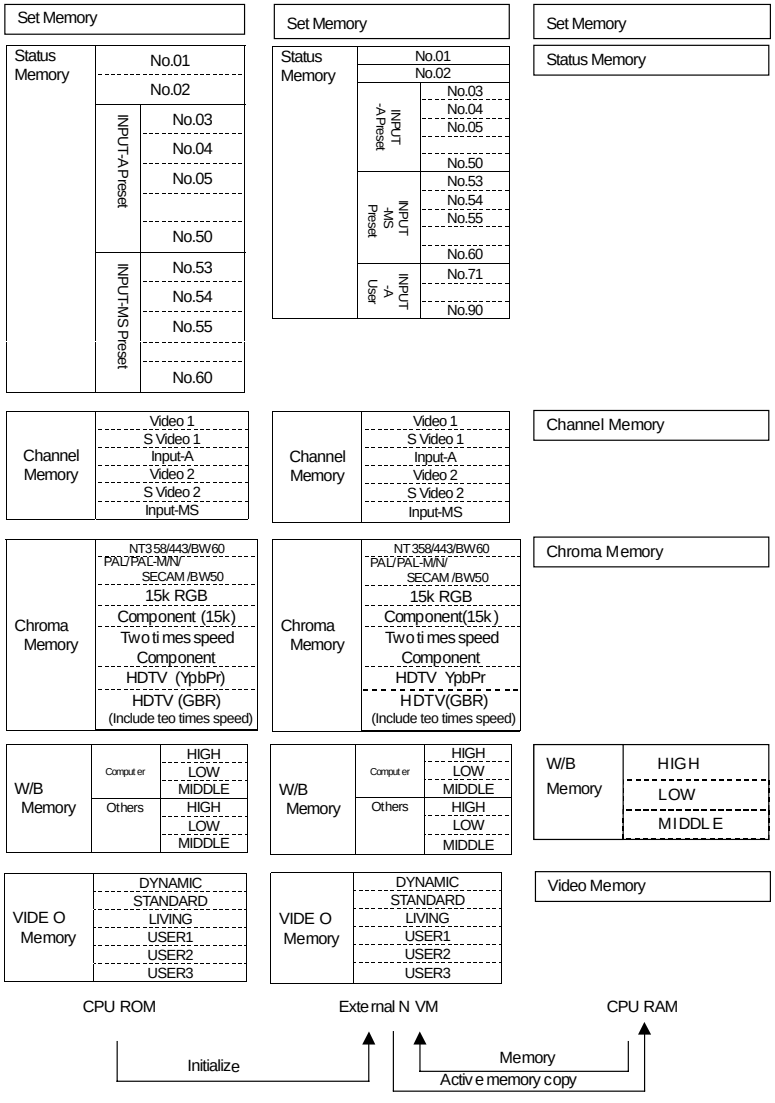

Section 4
Semiconductors

24LC21AT/SN
BA10393F
BA10393F-E2
IRMF-A0T-QTP
LT1767EMS8-TR
M24C64
M24C64-WMN6T(A)
MM1096AFF
NJM2533M(TE2)
TA75W393FU-TE12R
TC7W00FU(TE12R)
TC7W14FU(TE12R)
TC7W240FU
TC7W240FU(TE12R)
TC7WH74FK
TC7WH74FK(TE85R)
TC7WH74FU(TE12R)
TL431BCDR2

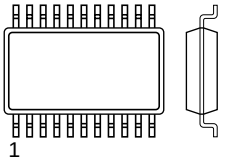

8PIN SOP

74VHC221AMYCX
CXA1875AM
CXA1875AM-T4
TC4053BF(EL)
TC74HC148AF(EL)
LT1399CGN-TR
MM1231XFBE

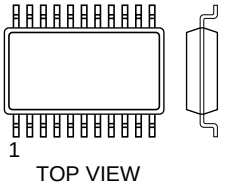

16PIN SOP

74VHC08MTCX
74VHC14MTCX
74VHC125MTCX
BA10339FV
BA10339FV-E2
TC74LCX125FT
TC74LCX125FT(EL)

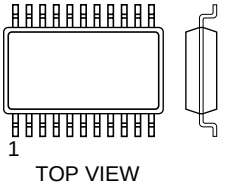

14PIN SOP

74VHC240MTCX
74VHC541MTCX
74VHCT541MTCX
CXA1846BN-T4
MK1714-01
MK1714-01RT
M52347FP-TE

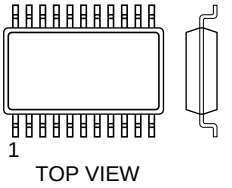

20PIN SOP

AD9884AKS-100

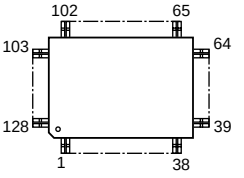

ADV7123KST140

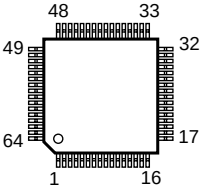

BA033F-E2
BA033FP-E2
BA05FP-E2
BA09F-E2
BA12FP-E2
BA15FP-
E2E2LP2985IM5X-3.3

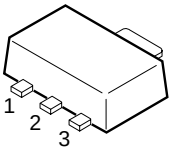

BA12FP-E2

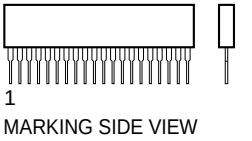

CXA2101AQ
CXA2101AQ-TL

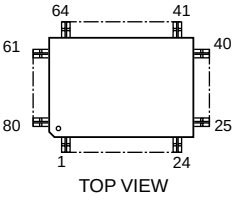

CXA2123AQ
CXA2123AQ-T6

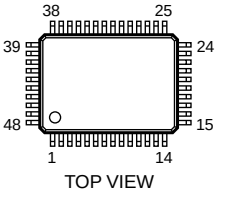

CXA3512R-T6

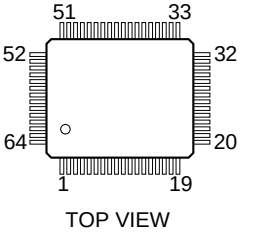

CXD9607GB

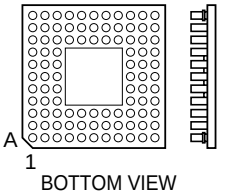

144PIN PGA

HD64F2633
HD64F2633TE

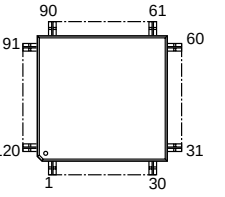

HM62V16256CLT5SLZ

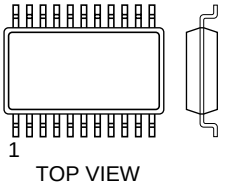

44PIN SOP

ISPLSI2032VE-110
ISPLSI2032VE-110LT44/1714A
MB86189
MB86189PFV-G-BND-ER

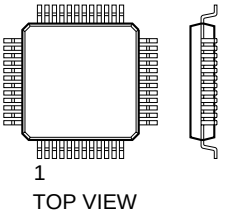

48PIN QFP

LM4041DIM3-1.2
LM4041DIM3-1.2(T&R)

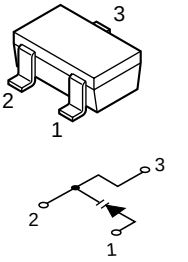

LM7131BCM5X

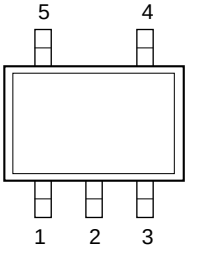

LMC7101BIM5X
TC7S08FU
TC7S08FU(TE85R)
TC7SET08FU(TE85R)

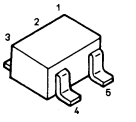

NC7SZ04P5
LP2985IM5X-3.3
TC75S56F(TE85R)
TC7S04FU(TE85R)
TC7S14FU(TE85R)

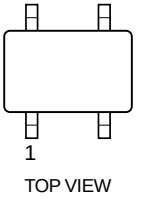

5PIN CHIP

M52749FP
M52749FP-TP

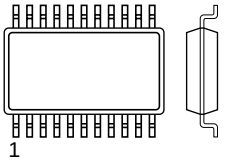

42PIN SOP

MC14162FT

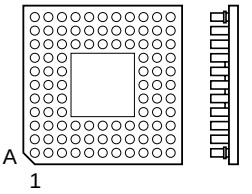

48PIN PGA

MT48LC8M16A2TG75
MT48LC8M16A2TG-75TR

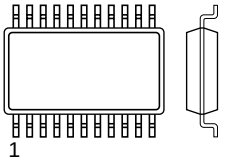

54PIN TSOP

PQ2TZ15U

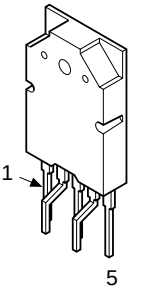

SST39VF800A-70
SST39VF800A-70-1719A-T

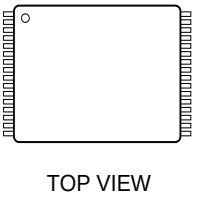

48PIN

M52758FP

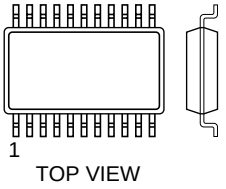

36PIN SOP

MCZ3001D

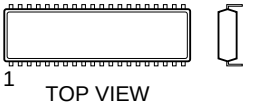

18PIN DIP

MZ1540

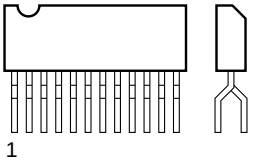

PW365-10U

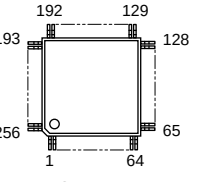

TDA2009A

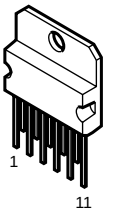

M62392FP

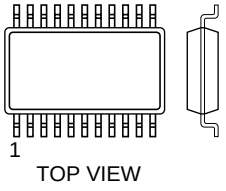

24PIN SOP

MD2305F

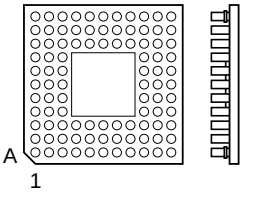

280PIN PGA

PC123F2
PC123FY2

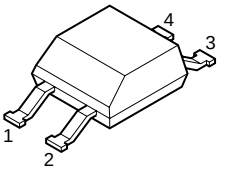

RS-140-T

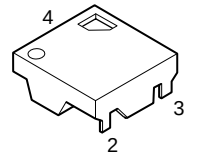

TK11900MTL

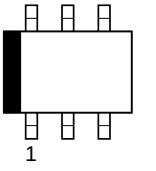

MBM29LV800TA-90PFTN

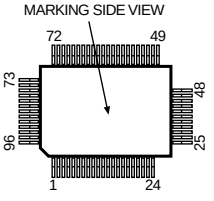

MSM514265C-60JSDR1

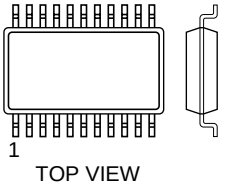

40PIN SOP

PQ20VZ1U

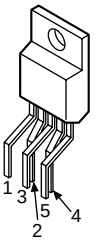

1: DC IN
2: ON/OFF CTL
3: DC OUT
4: DC OUT ADJ
5: GND

S-80828ANNP
S-80828ANNP-EDR-T2
S-80842ANNP
S-80842ANNP-ED6
S-80842ANNP-ED6-T2

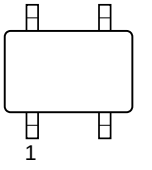

4PIN CHIP

UPD64082GF-3BA

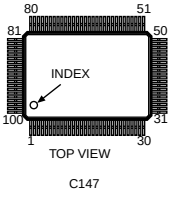

2SA1037AK
2SA1037AK-T146-QR
2SA1162
2SA1162-G
2SA1162-YG-TE85L
2SA1462-T1Y33Y34
2SA1611
2SA1611-M5M6
2SA1611T1-M5M6
2SC2712
2SC2712-YG-TE85L
2SC3326N
2SC3326N-TE85L-AB
DTA144EKA
DTA144EKA-T106
DTC114EK
DTC144EKA-T146
DTC144EUA
DTC144EUA-T10

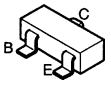

2SJ530S-TL

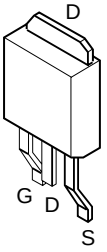

HN1B01FU-T
HN1B01FU-TE85R
HN1C01FU-TE85R

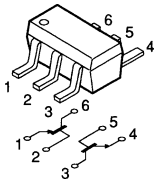

XP4501-TXE

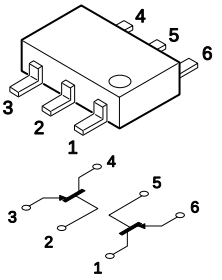

Diode

1SS355
1SS355TE-17
D2FS4-T
MA111-(K8).S0
MA111-TX
RD9.1SB2
RD9.1SB2-T1
UDZ-TE-17-3.9B

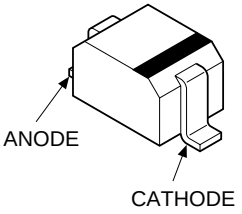

BZA456A

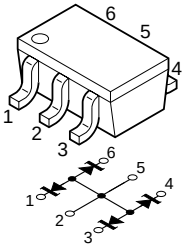

D1FS4A-TA

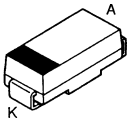

D6SB80

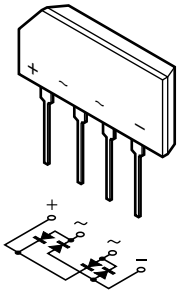

DAN202K
DAN202K-T-146
MA157-TX

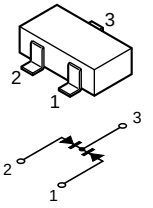

DAP202K-T-146

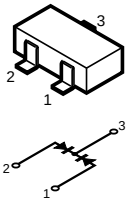

DF10SC4M
DF10SC6M

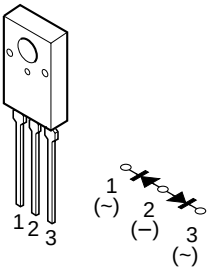

GP1U28Y

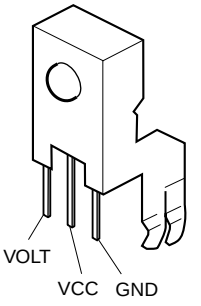

HN1D03FU-TE85
HN1D03FU-TE85L
HN1D03FU-TE85R

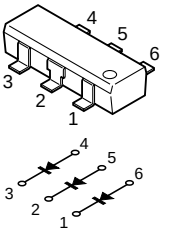

RD16M-T1B2
RD18M-T1B1
RD33M-B
RD33M-T1B
RD6.8M
RD6.8M-B1
RD6.8M-T1B1

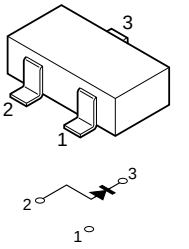

RM11C-V1
RM11C(RECTI)

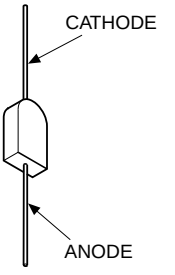

SEC1901C
SEC2422C

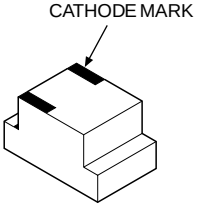

UF4005PKG23

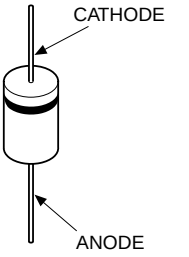

UMZ6.8M
UMZ6.8M-T106

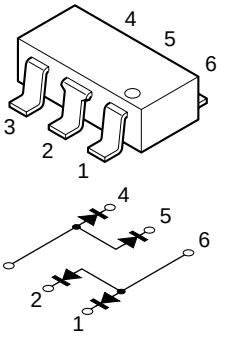

Section 5
Spare Parts

5-1. Notes on Repair Parts

1. Safety Related Components Warning

WARNING

Components marked ⚠ are critical to safe operation. Therefore, specified parts should be used in the case of replacement.

WARNHINWEIS

Les composants identifiés par la marque ⚠ sont critiques pour la sécurité.
Ne les remplacer que par une pièce portant le numéro spécifié.

2. Standardization of Parts

Some repair parts supplied by Sony differ from those used for the unit. These are because of parts commonality and improvement.
Parts List has the present standardized repair parts.

3. Stock of Parts

Parts marked with “o” at SP (Supply Code) column of the Spare Parts list may not be stocked. Therefore, the delivery date will be delayed.
Items with no part number and no description are not stocked because they are seldom required for routine service.

4. Units for Capacitors, Inductors and Resistors

The following units are assumed in Schematic Diagrams, Electrical Parts List and Exploded Views unless otherwise specified.

Capacitors	: µF
Inductors	: µH
Resistors	: Ω

5-2. Exploded Views

5-2-1. Cover

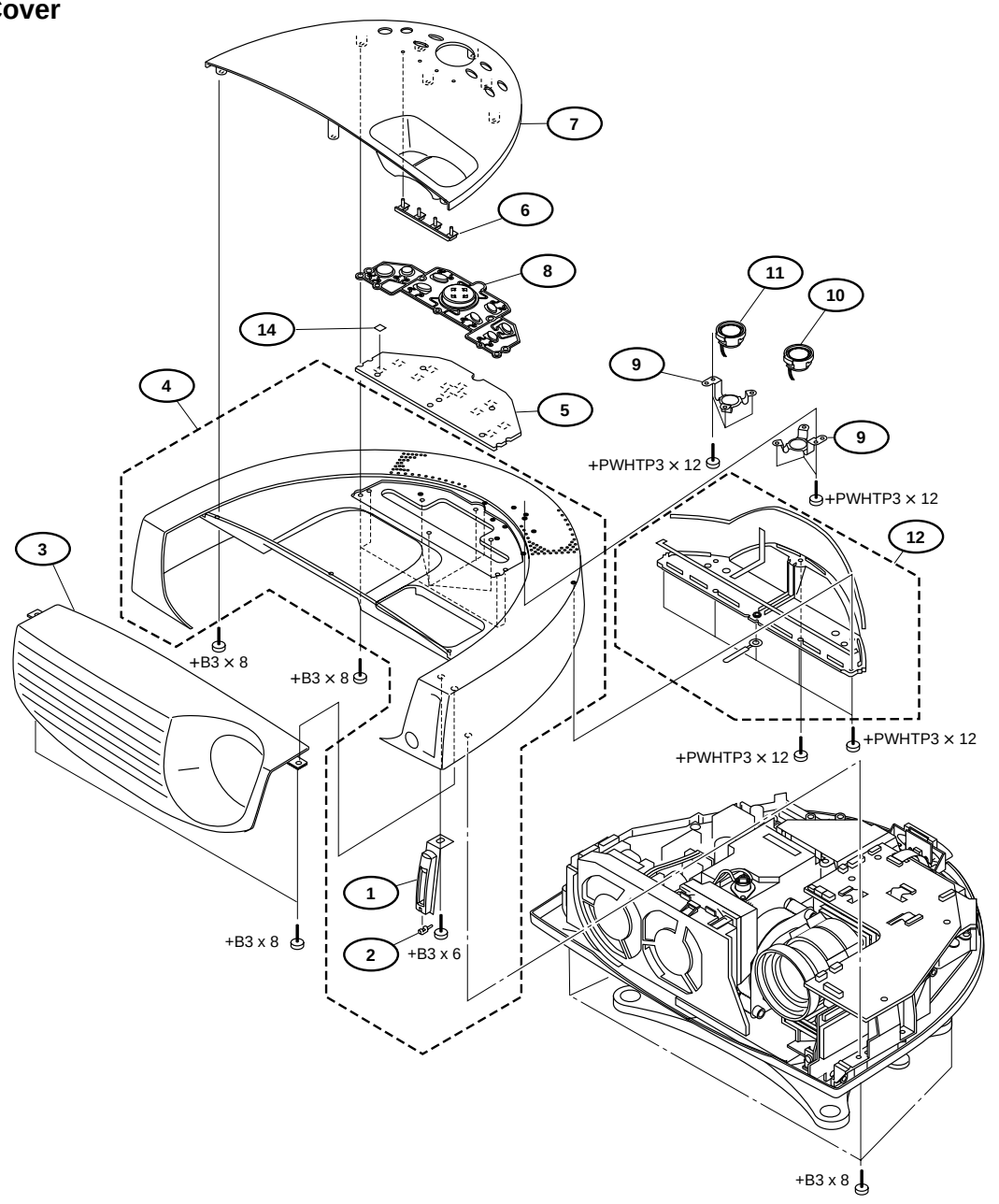

No.	Part No.	SP	Description
1	4-085-079-01	s	SLOT, MS
2	4-085-042-01	s	GUIDE (MS), LED
3	4-085-033-01	s	COVER, FRONT
4	X-4039-440-1	s	HOOD ASSY
5	A-1375-226-A	o	MOUNTED CIRCUIT BOARD, H
6	4-085-036-01	s	GUIDE, LED
7	4-085-032-01	s	COVER, TOP
8	X-4039-442-1	s	BUTTON ASSY
9	X-4039-453-1	o	SPRING ASSY, SPEAKER
10	A-1501-949-A	s	SPEAKER (L) ASSY
11	A-1501-985-A	s	SPEAKER (R) ASSY
12	X-4039-444-1	o	BOX ASSY, SPEAKER
14	4-085-610-01	s	CUSHION (H)
Screws			
	7-682-547-04	s	SCREW +B3X6
	7-682-547-09	s	SCREW +B3X6
	7-682-548-04	s	SCREW +B3X8
	3-703-136-11	s	SCREW +PWHTP3X12

5-2-2. Chassis 1

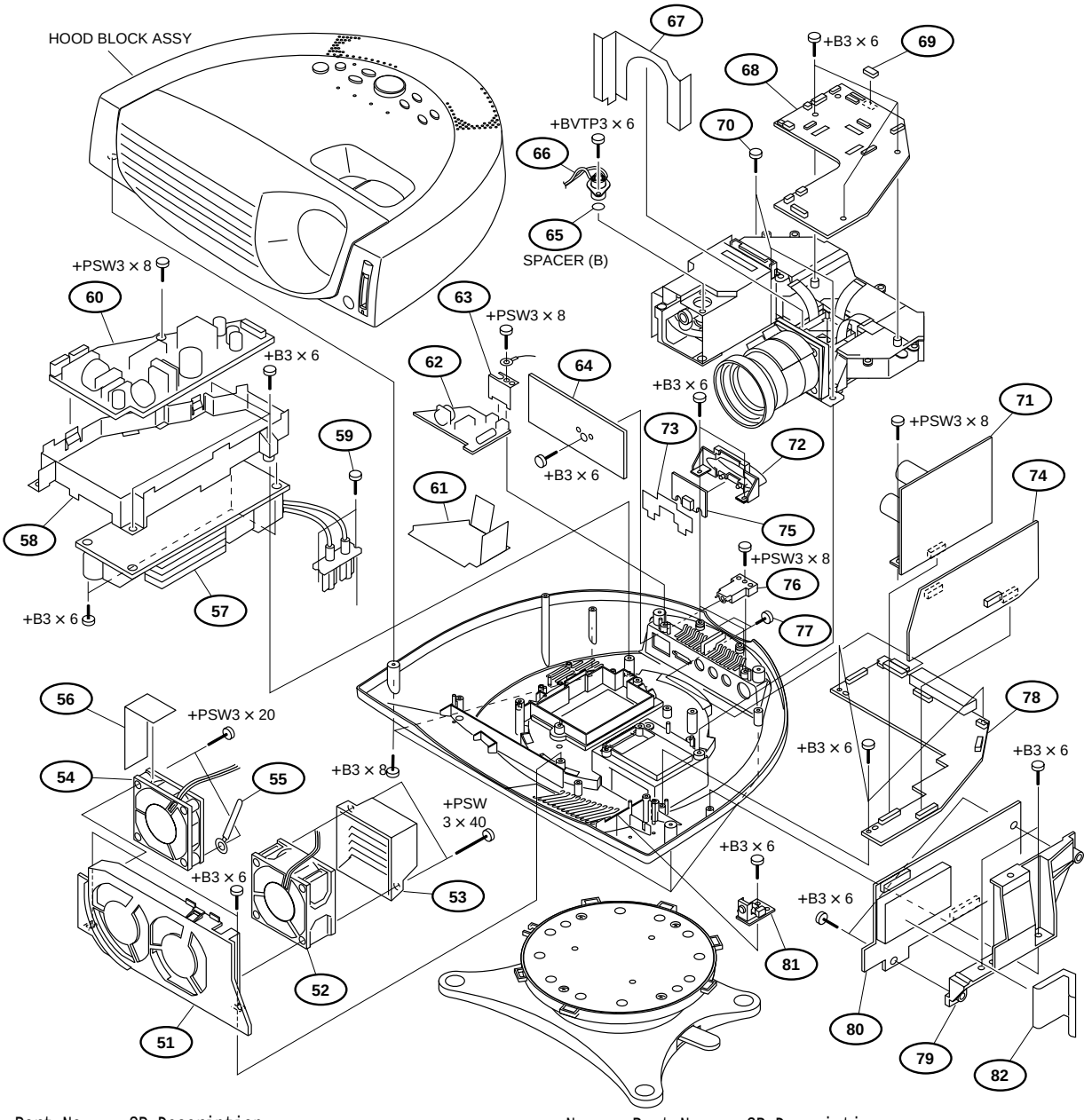

No.	Part No.	SP	Description
51	4-085-084-01	o	HOLDER, FAN
52	1-763-759-11	s	FAN, DC
53	4-085-050-01	o	LOUVER, LAMP
55	3-701-822-00	s	HOLDER, WIRE
56	4-085-073-01	o	SHEET (G2)
57	1-468-625-11	s	POWER BLOCK
58	4-085-051-01	o	HOLDER (G)
59	4-084-345-01	s	+)P TAPPING SCREW B-O (W)
60	A-1316-582-A	o	MOUNTED CIRCUIT BOARD, G
61	4-085-053-01	o	SHEET (F1)
62	A-1245-606-A	o	MOUNTED CIRCUIT BOARD, F
63	4-085-052-01	o	HOLDER (AC)
64	A-1136-230-A	o	MOUNTED CIRCUIT BOARD, BA
65	4-085-509-01	s	SPACER (B)
66	1-576-576-11	s	THERMOSTAT
67	4-085-072-01	o	SHEET (U1)
68	A-1335-148-A	o	MOUNTED CIRCUIT BOARD, C
69	4-085-538-01	s	GASKET (C1)
70	4-083-075-01	s	SCREW, MACHINE, (+) PM4X10

No.	Part No.	SP	Description
71	A-1136-232-A	o	MOUNTED CIRCUIT BOARD, BC
72	X-4039-438-1	s	WINDOW (ER) ASSY, RM
73	4-085-074-01	o	SHEET (ER)
74	A-1136-231-A	o	MOUNTED CIRCUIT BOARD, BB
75	A-1391-155-A	o	MOUNTED CIRCUIT BOARD, NR
76	4-085-071-01	o	HOLDER (BA)
77	4-085-075-01	s	SCREW M1.6X5, SPECIAL HEAD
78	A-1275-212-A	o	MOUNTED CIRCUIT BOARD, Q
79	4-085-054-01	o	HOLDER (MSC)
80	A-1306-610-A	o	MOUNTED CIRCUIT BOARD, MS
81	A-1391-165-A	o	MOUNTED CIRCUIT BOARD, NF
82	4-085-744-01	o	GASKET (MS)

Screws

	7-682-547-04	s	SCREW +B3X6
	7-682-948-09	s	CREW +PSW 3X8
	7-682-953-09	s	SCREW +PSW 3X20
	7-682-954-09	s	SCREW +PSW 3X25
	7-682-957-09	s	SCREW +PSW 3X40
	7-685-645-79	s	SCREW +BVTP3X6

5-2-3. Chassis 2

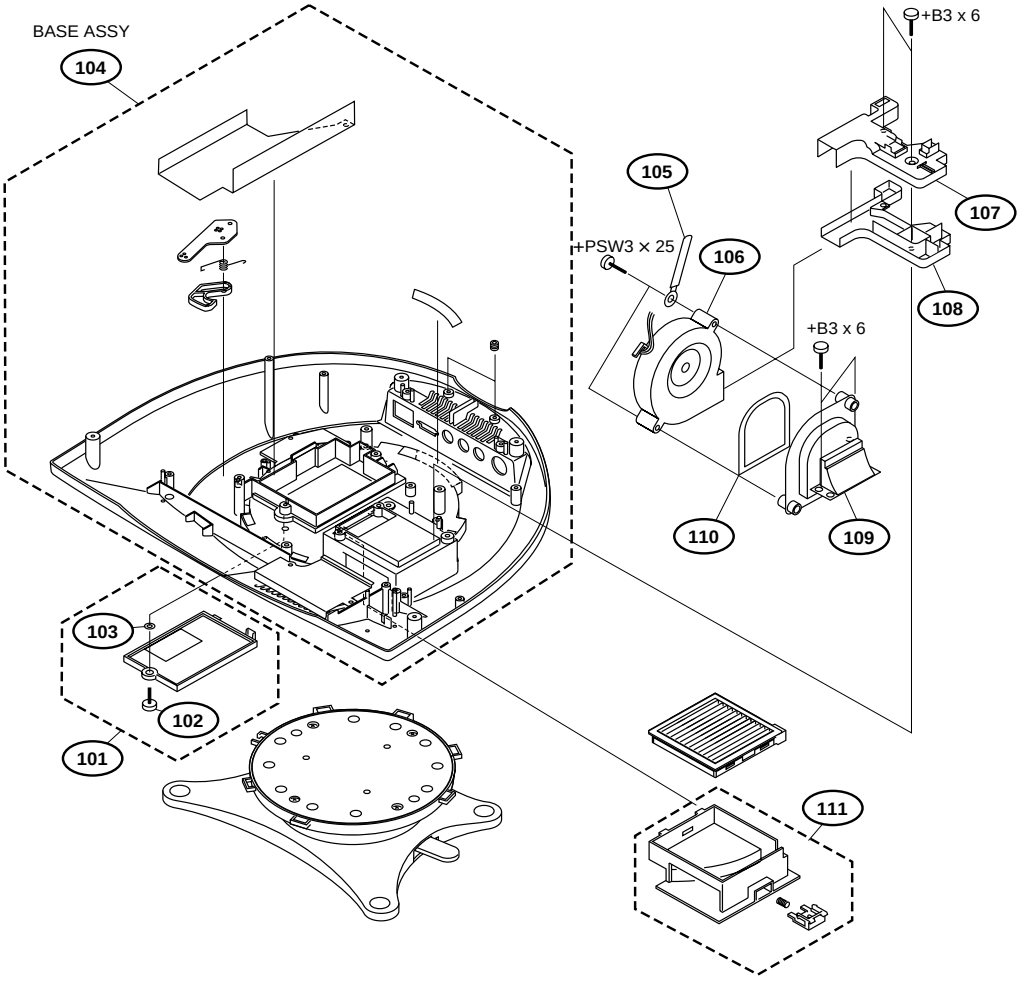

No.	Part No.	SP	Description	
101	X-4039-445-1	s	COVER ASSY, LAMP	
102	4-066-202-01	s	SCREW, M3	
103	3-715-526-01	o	WASHER (M3)	(PLA)
104	X-4039-439-1	s	BASE ASSY	
105	3-701-822-01	s	HOLDER,WIRE	
106	1-763-757-11	s	FAN, BLOWER	
107	4-085-063-01	o	DUCT (U), HS	
108	4-085-064-01	o	DUCT (B), HS	
109	4-085-082-01	o	HOLDER (S), FAN	
110	4-085-083-01	o	PACKING (FHS)	
111	X-4039-443-1	s	COVER ASSY, FILTER	
Screws				
	7-682-547-04	s	SCREW +B3X6	
	7-682-954-09	s	SCREW +PSW 3X25	

5-2-4. Stand

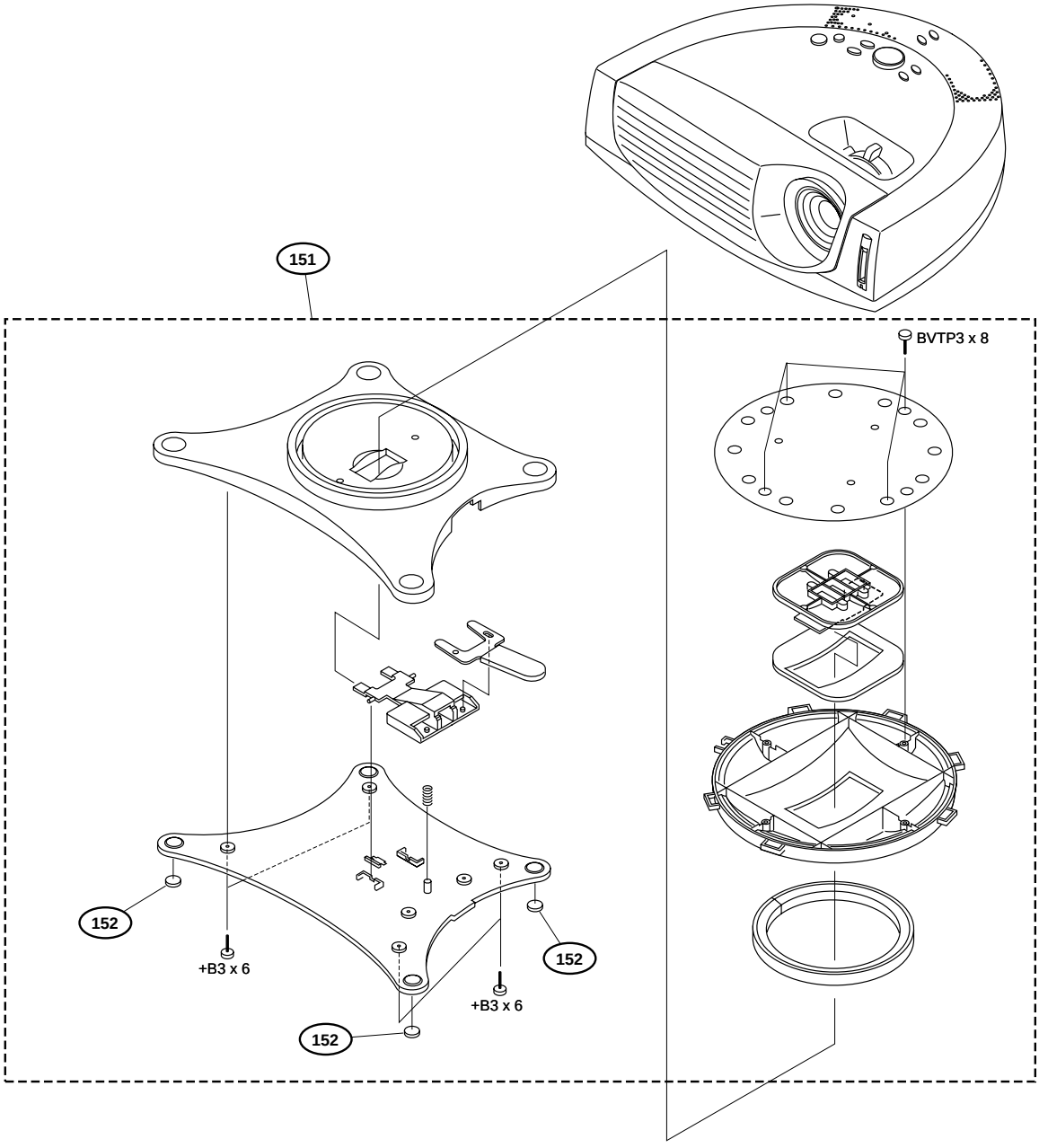

No.	Part No.	SP	Description
151	X-4039-448-1	s	STAND ASSY
152	4-085-329-01	s	FOOT, STAND
Screws			
	7-682-548-04	s	SCREW +B3X8
	7-682-948-09	s	SCREW +BVTP 3X8

5-2-5. Optics 1

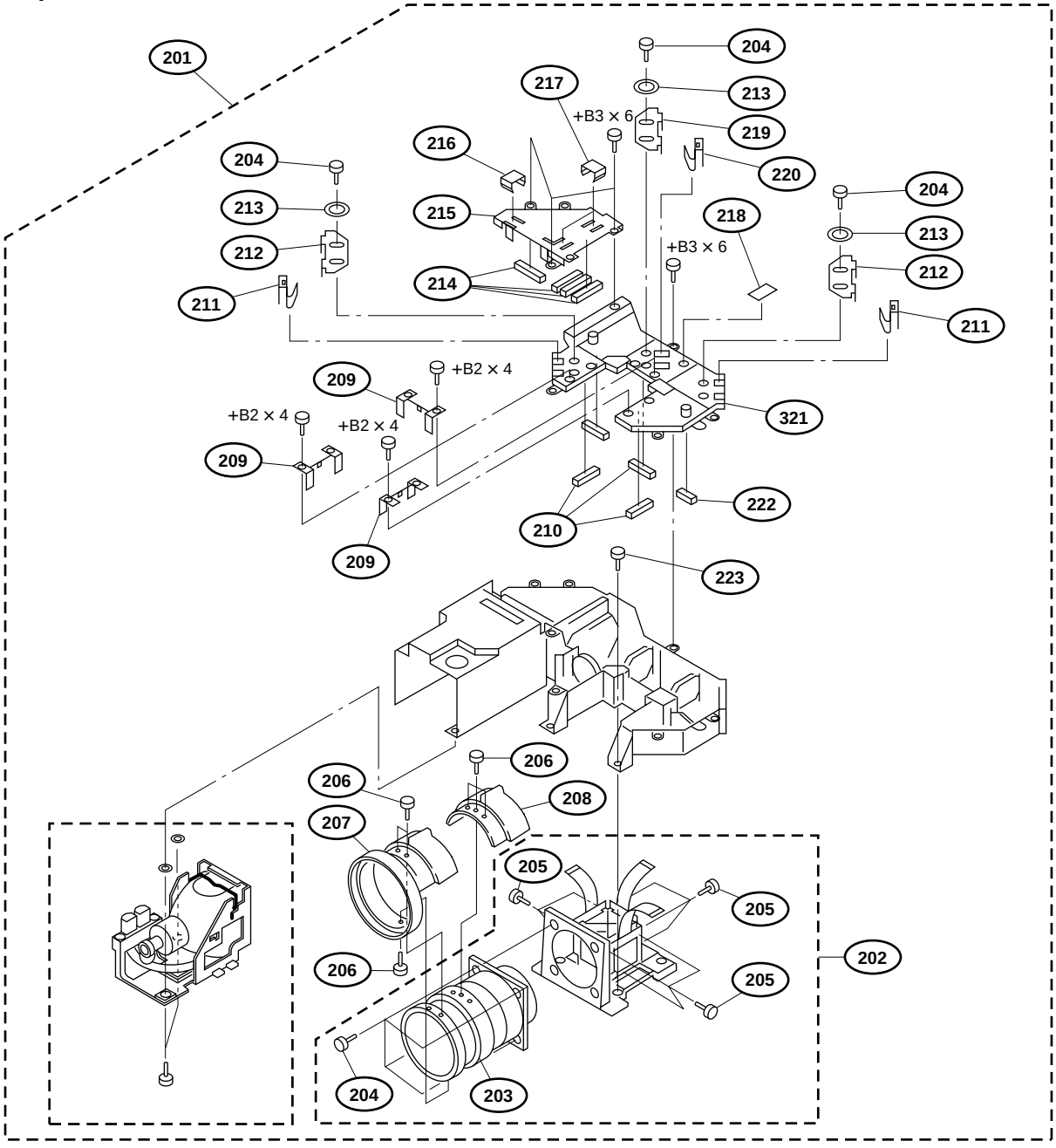

No.	Part No.	SP	Description
201	A-1485-363-A	s	OPTICS BLOCK ASSY
202	A-1485-364-A	s	PRISM BLOCK ASSY
203	A-1502-015-A	s	PROJECTION LENS
204	4-074-474-01	s	+BSW M3X8
205	4-074-473-01	s	+K M1.7X6
206	4-887-321-01	s	SCREW(B1.7X4)(G),TAPPING (ST)
207	4-085-337-01	o	RING, F
208	4-085-338-01	o	RING, Z
209	4-082-784-01	o	HOLDER, IN-POLARIZER
210	4-082-764-01	o	STOPPER, CH CONDENCER
211	4-074-405-01	o	FASTENER (RB)
212	4-082-749-01	o	ADJUSTER, RB-MIRROR
213	4-066-174-01	s	STOPPER (OPT), ROTATION
214	4-082-763-01	o	STOPPER, P/S
215	4-082-824-01	o	COVER (B), UNIT
216	4-082-744-01	o	SPRING (FY-PS)
217	4-082-754-01	o	SPRING (UV-FY)
218	4-074-425-01	s	TAPE (A), SEAL (NYLON)
219	4-082-750-01	o	ADJUSTMENT, G-MIRROR
220	4-082-748-01	o	FASTENER (G)
221	4-082-826-01	o	COVER (F), UNIT
222	4-082-765-01	o	STOPPER, RELAY LENS-2
223	4-082-759-01	s	SCREW, MACHINE, (+)P M4X12
224	4-074-426-01	o	CUSHION (FLY EYE)
225	4-082-758-01	s	FLAT HEAD SCREWS WASHER M3X6
226	4-084-369-01	s	(+) SPECIAL MACHINE SCREW (SW)
Screws			
	7-621-772-10	s	SCREW +B2X4
	7-682-547-04	s	SCREW +B3X6
	7-685-903-31	s	SCREW,+PWHTP 3X10

5-2-6. Optics 2

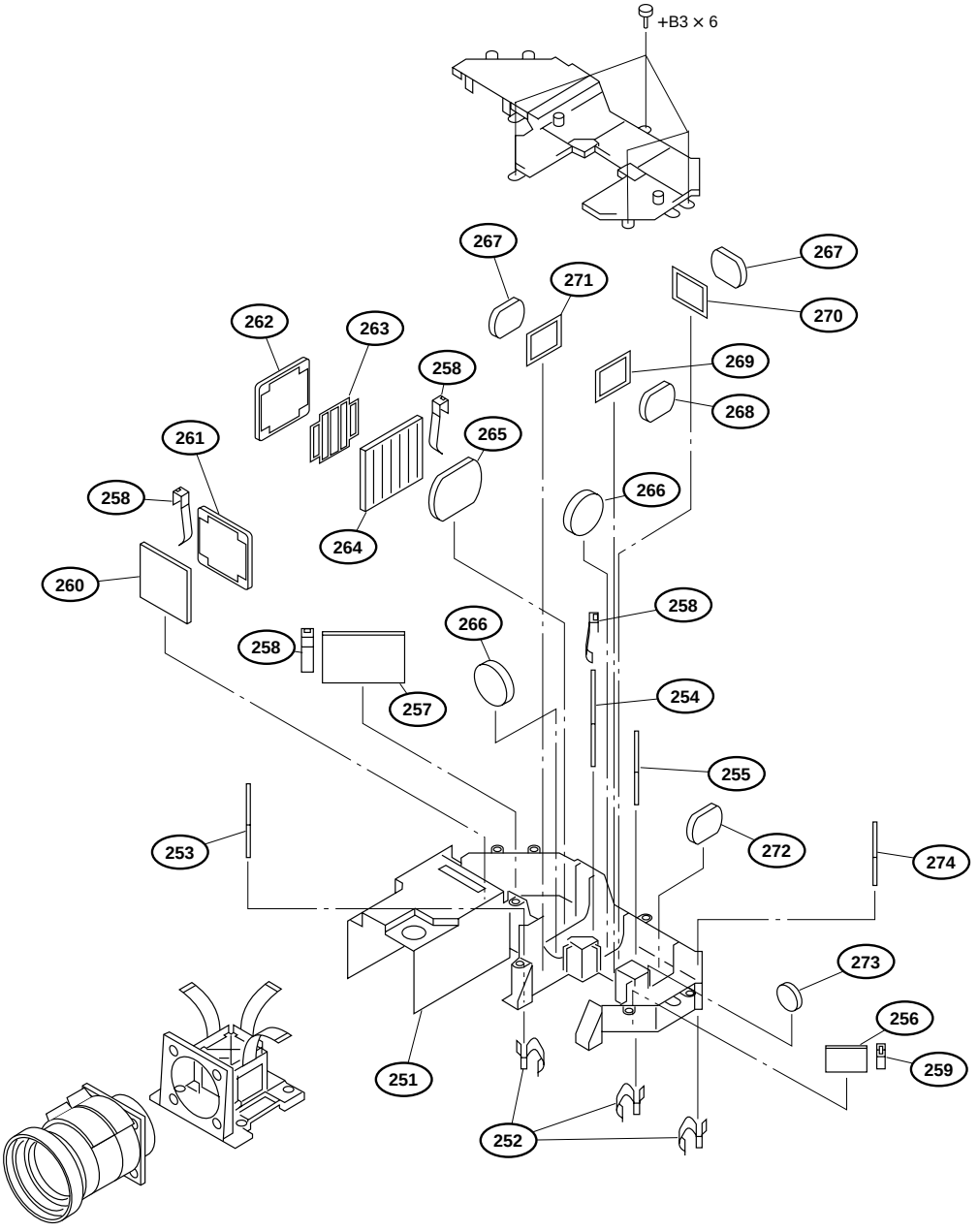

No.	Part No.	SP	Description
251	4-082-825-01	o	BASE, UNIT
252	4-066-172-01	s	FASTENER (OPT), MIRROR
253	4-082-773-01	o	MIRROR, B-CHANNEL
254	4-082-771-01	o	DICHROICMIRROR, B-REFRECT
255	4-082-772-01	o	DICHROICMIRROR, G-REFRECT
256	4-082-775-01	o	MIRROR, R-CHANNEL-2
257	4-082-768-01	o	MIRROR, WIDE BAND
258	4-082-745-01	o	SPRING (FY)
259	4-082-746-01	o	SPRING (R)
260	4-082-783-01	o	FILTER, UV-CUT
261	4-082-792-01	o	FLY EYE, LENSE-1
262	4-082-793-01	o	FLY EYE, LENSE-2
263	4-082-747-01	o	SLIT, P/S
264	A-1501-924-A	s	PS ASSY
265	4-082-778-11	o	LENS, MAIN CONDENSER

No.	Part No.	SP	Description
266	4-082-779-11	o	LENS, MAIN-2
267	4-082-766-11	o	LENS, GB-CH CONDENSER
268	4-082-767-11	o	LENS, R-CH CONDENSER
269	A-1501-911-A	s	IN POLARIZOR (R) ASSY
270	A-1501-912-A	s	IN-POLARIZER (G) ASSY
271	A-1502-017-A	s	IN-POLARIZER (B) ASSY
272	4-082-776-11	o	LENS, RELAY-1
273	4-082-777-11	o	LENS, RELAY-2
274	4-082-774-01	o	MIRROR, R-CHANNEL-1

Screws

	7-682-547-04	s	SCREW +B3X6

5-2-7. Stand (SU-HS1)

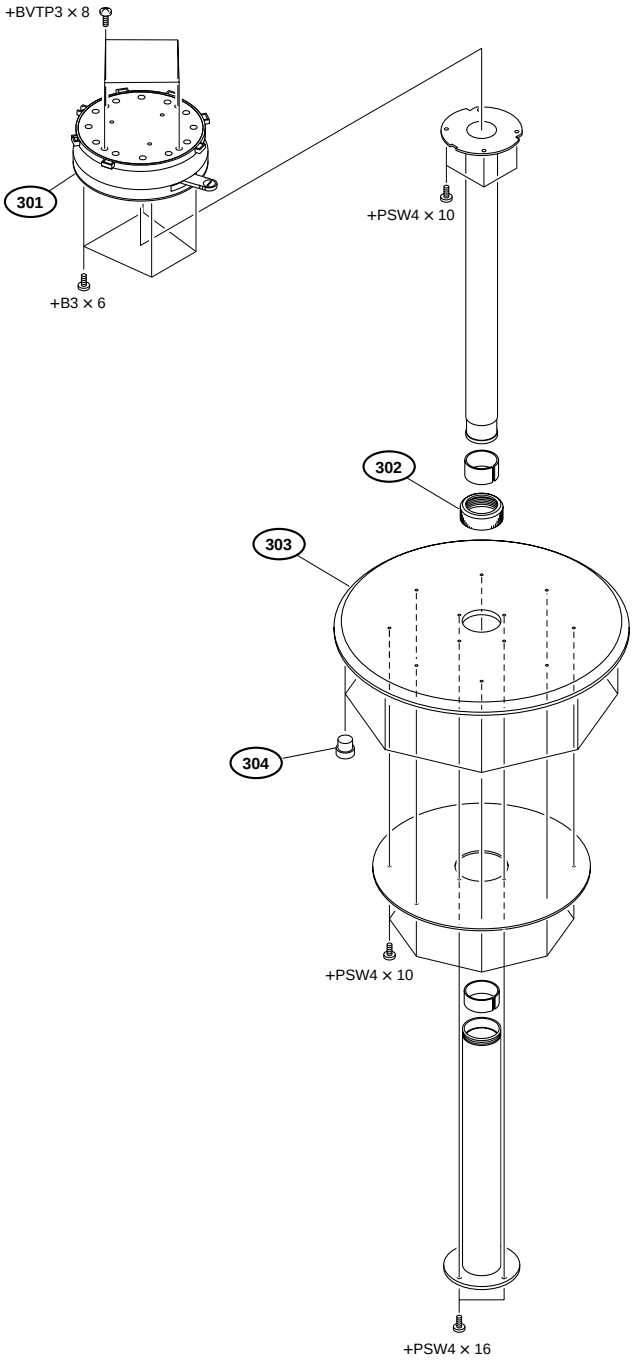

No.	Part No.	SP	Description
301	X-4039-498-1	s	STAND ASSY
302	4-085-350-01	s	NUT ADJUSTOR
303	4-085-355-01	s	BASES
304	4-085-663-01	O	FOOT, RUBBER

Screws

	7-682-547-09	s	SCREW +B 3X6
	7-682-548-04	s	SCREW +BVTP 3X8 TYPE2
	7-682-962-01	s	SCREW +PSW 4X10
	7-682-965-01	s	SCREW +PSW 4X16

5-3. Electrical Parts List

BA BOARD

Ref. No. or Q'ty	Part No.	SP	Description
1pc	A-1136-230-A	s	MOUNTEC C.BOARD,BA COMPL
C101	1-117-681-11	s	CAPACITOR, ELECT 100MF/16V
C102	1-125-891-11	s	CAPACITOR CERAMIC 0.47MF/10V
C103	1-164-227-11	s	CAPACITOR,CERAMIC 0.022MF/25V
C105	1-162-970-11	s	CAPACITOR CERAMIC 0.01MF/25V B
C106	1-107-682-11	s	CAPACITOR,CHIP 1MF/16V (3216)
C107	1-162-970-11	s	CAPACITOR CERAMIC 0.01MF/25V B
C108	1-126-601-11	s	CAPACITOR,ELECT 2.2MF/50V
C110	1-162-970-11	s	CAPACITOR CERAMIC 0.01MF/25V B
C111	1-128-004-11	s	CAPACITOR ELECT 10MF/16V(CHIP)
C112	1-107-826-11	s	CAPACITOR,CHIP CERAMIC 0.1MF
C113	1-117-681-11	s	CAPACITOR, ELECT 100MF/16V
C114	1-117-681-11	s	CAPACITOR, ELECT 100MF/16V
C115	1-162-970-11	s	CAPACITOR CERAMIC 0.01MF/25V B
C116	1-162-970-11	s	CAPACITOR CERAMIC 0.01MF/25V B
C117	1-127-820-11	s	CAPACITOR, SQUARE CHIP 4.7MF
C118	1-117-681-11	s	CAPACITOR, ELECT 100MF/16V
C119	1-107-826-11	s	CAPACITOR,CHIP CERAMIC 0.1MF
C120	1-162-915-11	s	CAPACITOR,CERAMIC 10PF/50V CH
C121	1-128-004-11	s	CAPACITOR ELECT 10MF/16V(CHIP)
C122	1-107-826-11	s	CAPACITOR,CHIP CERAMIC 0.1MF
C123	1-125-898-11	s	CAPACITOR, CERAMIC 0.22MF 50V
C124	1-162-970-11	s	CAPACITOR CERAMIC 0.01MF/25V B
C125	1-162-970-11	s	CAPACITOR CERAMIC 0.01MF/25V B
C126	1-162-970-11	s	CAPACITOR CERAMIC 0.01MF/25V B
C127	1-107-826-11	s	CAPACITOR,CHIP CERAMIC 0.1MF
C128	1-107-826-11	s	CAPACITOR,CHIP CERAMIC 0.1MF
C129	1-107-826-11	s	CAPACITOR,CHIP CERAMIC 0.1MF
C130	1-127-820-11	s	CAPACITOR, SQUARE CHIP 4.7MF
C131	1-107-826-11	s	CAPACITOR,CHIP CERAMIC 0.1MF
C132	1-107-826-11	s	CAPACITOR,CHIP CERAMIC 0.1MF
C133	1-107-826-11	s	CAPACITOR,CHIP CERAMIC 0.1MF
C137	1-128-004-11	s	CAPACITOR ELECT 10MF/16V(CHIP)
C138	1-128-004-11	s	CAPACITOR ELECT 10MF/16V(CHIP)
C139	1-162-970-11	s	CAPACITOR CERAMIC 0.01MF/25V B
C140	1-117-681-11	s	CAPACITOR, ELECT 100MF/16V
C141	1-107-826-11	s	CAPACITOR,CHIP CERAMIC 0.1MF
C142	1-107-826-11	s	CAPACITOR,CHIP CERAMIC 0.1MF
C143	1-107-826-11	s	CAPACITOR,CHIP CERAMIC 0.1MF
C144	1-162-970-11	s	CAPACITOR CERAMIC 0.01MF/25V B
C145	1-128-398-11	s	CAP, ELECT 220MF/16V (CHIP)
C201	1-162-970-11	s	CAPACITOR CERAMIC 0.01MF/25V B
C202	1-107-826-11	s	CAPACITOR,CHIP CERAMIC 0.1MF
C203	1-107-826-11	s	CAPACITOR,CHIP CERAMIC 0.1MF
C204	1-126-205-11	s	CAPACITOR,ELECT 47M/6.3
C205	1-107-826-11	s	CAPACITOR,CHIP CERAMIC 0.1MF
C206	1-128-004-11	s	CAPACITOR ELECT 10MF/16V(CHIP)
C207	1-126-205-11	s	CAPACITOR,ELECT 47M/6.3
C208	1-107-826-11	s	CAPACITOR,CHIP CERAMIC 0.1MF
C209	1-107-826-11	s	CAPACITOR,CHIP CERAMIC 0.1MF
C210	1-107-826-11	s	CAPACITOR,CHIP CERAMIC 0.1MF
C211	1-107-826-11	s	CAPACITOR,CHIP CERAMIC 0.1MF
C212	1-107-826-11	s	CAPACITOR,CHIP CERAMIC 0.1MF
C214	1-128-390-11	s	CAPACITOR ELECT 220MF/6.3V
C215	1-107-826-11	s	CAPACITOR,CHIP CERAMIC 0.1MF
C216	1-107-826-11	s	CAPACITOR,CHIP CERAMIC 0.1MF
C217	1-107-826-11	s	CAPACITOR,CHIP CERAMIC 0.1MF
C218	1-126-205-11	s	CAPACITOR,ELECT 47M/6.3

(BA BOARD)

Ref. No. or Q'ty	Part No.	SP	Description
C219	1-162-970-11	s	CAPACITOR CERAMIC 0.01MF/25V B
C220	1-162-920-11	s	CAPACITOR,CERAMIC 27PF/50V CH
C221	1-162-920-11	s	CAPACITOR,CERAMIC 27PF/50V CH
C222	1-162-924-11	s	CAPACITOR,CERAMIC 56PF/50V CH
C223	1-162-924-11	s	CAPACITOR,CERAMIC 56PF/50V CH
C224	1-162-970-11	s	CAPACITOR CERAMIC 0.01MF/25V B
C225	1-128-004-11	s	CAPACITOR ELECT 10MF/16V(CHIP)
C226	1-126-204-11	s	CAPACITOR, ELECT 47MF/16V(CHIP
C228	1-162-919-11	s	CAPACITOR,CERAMIC 22PF/50V CH
C229	1-162-924-11	s	CAPACITOR,CERAMIC 56PF/50V CH
C230	1-162-919-11	s	CAPACITOR,CERAMIC 22PF/50V CH
C231	1-117-681-11	s	CAPACITOR, ELECT 100MF/16V
C232	1-107-826-11	s	CAPACITOR,CHIP CERAMIC 0.1MF
C301	1-117-681-11	s	CAPACITOR, ELECT 100MF/16V
C303	1-107-826-11	s	CAPACITOR,CHIP CERAMIC 0.1MF
C304	1-107-826-11	s	CAPACITOR,CHIP CERAMIC 0.1MF
C305	1-164-392-11	s	CAPACITOR CERAMIC 390PF/50V CH
C306	1-117-681-11	s	CAPACITOR, ELECT 100MF/16V
C307	1-162-966-11	s	CAPACITOR,CERAMIC 2200PF/50V B
C308	1-107-826-11	s	CAPACITOR,CHIP CERAMIC 0.1MF
C309	1-117-681-11	s	CAPACITOR, ELECT 100MF/16V
C310	1-162-916-11	s	CAPACITOR,CERAMIC 12PF/50V CH
C311	1-162-916-11	s	CAPACITOR,CERAMIC 12PF/50V CH
C312	1-162-916-11	s	CAPACITOR,CERAMIC 12PF/50V CH
C313	1-162-916-11	s	CAPACITOR,CERAMIC 12PF/50V CH
C314	1-107-826-11	s	CAPACITOR,CHIP CERAMIC 0.1MF
C315	1-107-826-11	s	CAPACITOR,CHIP CERAMIC 0.1MF
C317	1-107-826-11	s	CAPACITOR,CHIP CERAMIC 0.1MF
C318	1-107-826-11	s	CAPACITOR,CHIP CERAMIC 0.1MF
C319	1-107-826-11	s	CAPACITOR,CHIP CERAMIC 0.1MF
C321	1-109-982-11	s	CAPACITOR,CHIP CERAMIC 1MF/10V
C322	1-107-826-11	s	CAPACITOR,CHIP CERAMIC 0.1MF
C323	1-162-927-11	s	CAPACITOR,CERAMIC 100PF/50V CH
C325	1-107-826-11	s	CAPACITOR,CHIP CERAMIC 0.1MF
C326	1-107-826-11	s	CAPACITOR,CHIP CERAMIC 0.1MF
C327	1-107-826-11	s	CAPACITOR,CHIP CERAMIC 0.1MF
C328	1-162-966-11	s	CAPACITOR,CERAMIC 2200PF/50V B
C329	1-107-826-11	s	CAPACITOR,CHIP CERAMIC 0.1MF
C330	1-107-826-11	s	CAPACITOR,CHIP CERAMIC 0.1MF
C331	1-107-826-11	s	CAPACITOR,CHIP CERAMIC 0.1MF
C332	1-107-826-11	s	CAPACITOR,CHIP CERAMIC 0.1MF
C333	1-107-826-11	s	CAPACITOR,CHIP CERAMIC 0.1MF
C334	1-107-826-11	s	CAPACITOR,CHIP CERAMIC 0.1MF
C335	1-107-826-11	s	CAPACITOR,CHIP CERAMIC 0.1MF
C336	1-128-391-11	s	CAPACITOR,ELECT 330MF/6.3V
C337	1-107-826-11	s	CAPACITOR,CHIP CERAMIC 0.1MF
C338	1-117-681-11	s	CAPACITOR, ELECT 100MF/16V
C339	1-128-013-11	s	CAPACITOR ERECT 1MF/50V
C340	1-162-920-11	s	CAPACITOR,CERAMIC 27PF/50V CH
C341	1-162-917-11	s	CAPACITOR,CERAMIC 15PF/50V CH
C342	1-162-917-11	s	CAPACITOR,CERAMIC 15PF/50V CH
C344	1-128-004-11	s	CAPACITOR ELECT 10MF/16V(CHIP)
C346	1-164-315-11	s	CAPACITOR,CERAMIC 470PF/50V CH
C347	1-128-013-11	s	CAPACITOR ERECT 1MF/50V
C348	1-107-826-11	s	CAPACITOR,CHIP CERAMIC 0.1MF
C349	1-117-681-11	s	CAPACITOR, ELECT 100MF/16V
C353	1-162-917-11	s	CAPACITOR,CERAMIC 15PF/50V CH
C354	1-128-004-11	s	CAPACITOR ELECT 10MF/16V(CHIP)
C355	1-164-505-11	s	CAPACITOR,CHIP CERAMIC 2.2MF

(BA BOARD)

Ref. No. or Q'ty	Part No.	SP	Description
C356	1-162-917-11	s	CAPACITOR,CERAMIC 15PF/50V CH
C359	1-107-826-11	s	CAPACITOR,CHIP CERAMIC 0.1MF
C360	1-117-681-11	s	CAPACITOR, ELECT 100MF/16V
C361	1-126-205-11	s	CAPACITOR,ELECT 47M/6.3
CN101	1-770-449-21	o	CONNECTOR, BOARD TO BOARD 70P
CN201	1-779-730-11	s	CONNECTOR, FFC/FPC (ZIF) 24P
FB101	1-414-234-11	s	INDUCTOR,FERRITE BEAD
FB301	1-543-775-11	s	BEAD, FERRITE
FB302	1-543-775-11	s	BEAD, FERRITE
FB303	1-543-775-11	s	BEAD, FERRITE
FB304	1-414-753-91	s	INDUCTOR 4.7UH
FB305	1-414-234-11	s	INDUCTOR,FERRITE BEAD
FB306	1-414-234-11	s	INDUCTOR,FERRITE BEAD
FB307	1-414-234-11	s	INDUCTOR,FERRITE BEAD
FL101	1-233-736-21	s	FILTER, EMI
FL102	1-233-736-21	s	FILTER, EMI
FL201	1-233-736-21	s	FILTER, EMI
FL202	1-233-736-21	s	FILTER, EMI
FL203	1-233-736-21	s	FILTER, EMI
FL204	1-233-736-21	s	FILTER, EMI
FL301	1-239-848-11	s	FILTER, LOW PASS
FL302	1-239-848-11	s	FILTER, LOW PASS
FL303	1-239-848-11	s	FILTER, LOW PASS
IC101	8-759-524-85	s	IC TC7W240FU(TE12R)
IC102	8-752-094-47	s	IC CXA2123AQ-T6
IC103	8-759-353-02	s	IC NJM2533M (TE2)
IC104	8-759-082-55	s	IC TC7W00FU
IC105	8-759-353-02	s	IC NJM2533M (TE2)
IC201	8-752-072-81	s	IC CXA1875AM
IC202	8-759-436-89	s	IC MC141627FT
IC301	8-759-652-56	s	IC BA033F-E2
IC302	8-759-533-85	s	IC L88M05T-FA-TL
IC304	8-759-568-27	s	IC MSM514265C-60JSDR1
IC305	8-759-594-44	s	IC UPD64082GF-3BA
L102	1-412-058-11	s	INDUCTOR,SMALL TYPE 10UH
L103	1-412-058-11	s	INDUCTOR,SMALL TYPE 10UH
L201	1-410-389-31	s	INDUCTOR,CHIP 47UH (3225)
L202	1-410-383-31	s	INDUCTOR,CHIP 15UH (3225)
L203	1-410-383-31	s	INDUCTOR,CHIP 15UH (3225)
L204	1-410-389-31	s	INDUCTOR,CHIP 47UH (3225)
L205	1-410-389-31	s	INDUCTOR,CHIP 47UH (3225)
L206	1-412-058-11	s	INDUCTOR,SMALL TYPE 10UH
L301	1-412-058-11	s	INDUCTOR,SMALL TYPE 10UH
L302	1-410-200-31	s	CHIP INDUCTOR
L304	1-412-058-11	s	INDUCTOR,SMALL TYPE 10UH
L305	1-412-058-11	s	INDUCTOR,SMALL TYPE 10UH
L307	1-412-058-11	s	INDUCTOR,SMALL TYPE 10UH
Q101	8-729-216-22	s	TRANSISTOR 2SA1162-G
Q102	8-729-230-49	s	TRANSISTOR 2SC2712-YG
Q103	8-729-216-22	s	TRANSISTOR 2SA1162-G
Q104	8-729-216-22	s	TRANSISTOR 2SA1162-G
Q105	8-729-216-22	s	TRANSISTOR 2SA1162-G
Q106	8-729-216-22	s	TRANSISTOR 2SA1162-G
Q201	1-801-806-11	s	TRANSISTOR DTC144EKA
Q202	8-729-216-22	s	TRANSISTOR 2SA1162-G
Q203	8-729-216-22	s	TRANSISTOR 2SA1162-G
Q204	8-729-216-22	s	TRANSISTOR 2SA1162-G

(BA BOARD)

Ref. No. or Q'ty	Part No.	SP	Description
Q205	8-729-230-49	s	TRANSISTOR 2SC2712-YG
Q206	8-729-230-49	s	TRANSISTOR 2SC2712-YG
Q207	8-729-230-49	s	TRANSISTOR 2SC2712-YG
Q208	8-729-230-49	s	TRANSISTOR 2SC2712-YG
Q209	8-729-230-49	s	TRANSISTOR 2SC2712-YG
Q210	8-729-216-22	s	TRANSISTOR 2SA1162-G
Q211	8-729-216-22	s	TRANSISTOR 2SA1162-G
Q212	8-729-230-49	s	TRANSISTOR 2SC2712-YG
Q213	8-729-230-49	s	TRANSISTOR 2SC2712-YG
Q214	8-729-230-49	s	TRANSISTOR 2SC2712-YG
Q301	8-729-216-22	s	TRANSISTOR 2SA1162-G
Q302	8-729-216-22	s	TRANSISTOR 2SA1162-G
Q303	8-729-216-22	s	TRANSISTOR 2SA1162-G
Q304	8-729-230-49	s	TRANSISTOR 2SC2712-YG
Q305	8-729-216-22	s	TRANSISTOR 2SA1162-G
Q306	8-729-230-49	s	TRANSISTOR 2SC2712-YG
Q307	8-729-216-22	s	TRANSISTOR 2SA1162-G
Q308	8-729-230-49	s	TRANSISTOR 2SC2712-YG
Q309	8-729-230-49	s	TRANSISTOR 2SC2712-YG
Q310	8-729-216-22	s	TRANSISTOR 2SA1162-G
Q311	8-729-230-49	s	TRANSISTOR 2SC2712-YG
Q312	8-729-230-49	s	TRANSISTOR 2SC2712-YG
Q313	8-729-230-49	s	TRANSISTOR 2SC2712-YG
Q314	8-729-230-49	s	TRANSISTOR 2SC2712-YG
Q315	8-729-230-49	s	TRANSISTOR 2SC2712-YG
R101	1-216-809-11	s	RESISTOR,CHIP 100 1/16W 1608
R102	1-216-809-11	s	RESISTOR,CHIP 100 1/16W 1608
R103	1-216-809-11	s	RESISTOR,CHIP 100 1/16W 1608
R104	1-216-805-11	s	RESISTOR,CHIP 47 1/16W 1608
R105	1-218-719-11	s	RESISTOR,METAL 13K 1/16
R106	1-216-835-11	s	RESISTOR,CHIP 15K 1/16W
R107	1-216-864-11	s	CONDUCTOR, CHIP (1608)
R108	1-216-825-11	s	RESISTOR,CHIP 2.2K 1/16W 1608
R109	1-216-864-11	s	CONDUCTOR, CHIP (1608)
R110	1-218-726-11	s	RESISTOR CHIP 27K 1/16W (1608)
R111	1-216-805-11	s	RESISTOR,CHIP 47 1/16W 1608
R112	1-216-828-11	s	RESISTOR, CHIP 3.9K 1/16W 1608
R113	1-216-841-11	s	RESISTOR, CHIP 47K 1/16W 1608
R114	1-216-841-11	s	RESISTOR, CHIP 47K 1/16W 1608
R115	1-216-855-11	s	RESISTOR, CHIP 680K 1/16W 1608
R116	1-218-692-11	s	RESISTOR,CHIP 1.0K 1/16W(1608)
R117	1-216-805-11	s	RESISTOR,CHIP 47 1/16W 1608
R118	1-216-855-11	s	RESISTOR, CHIP 680K 1/16W 1608
R119	1-216-809-11	s	RESISTOR,CHIP 100 1/16W 1608
R120	1-216-805-11	s	RESISTOR,CHIP 47 1/16W 1608
R121	1-216-809-11	s	RESISTOR,CHIP 100 1/16W 1608
R122	1-218-713-11	s	RESISTOR,METAL 7.5K 1/16W
R123	1-216-809-11	s	RESISTOR,CHIP 100 1/16W 1608
R124	1-216-809-11	s	RESISTOR,CHIP 100 1/16W 1608
R125	1-216-809-11	s	RESISTOR,CHIP 100 1/16W 1608
R126	1-216-821-11	s	RESISTOR,CHIP 1.0K 1/16W(1608)
R127	1-216-809-11	s	RESISTOR,CHIP 100 1/16W 1608
R128	1-216-821-11	s	RESISTOR,CHIP 1.0K 1/16W(1608)
R130	1-218-692-11	s	RESISTOR,CHIP 1.0K 1/16W(1608)
R133	1-218-692-11	s	RESISTOR,CHIP 1.0K 1/16W(1608)
R136	1-218-692-11	s	RESISTOR,CHIP 1.0K 1/16W(1608)
R138	1-216-805-11	s	RESISTOR,CHIP 47 1/16W 1608
R139	1-216-805-11	s	RESISTOR,CHIP 47 1/16W 1608
R140	1-216-825-11	s	RESISTOR,CHIP 2.2K 1/16W 1608

(BA BOARD)

Ref. No. or Q'ty	Part No.	SP	Description
R141	1-216-825-11	s	RESISTOR,CHIP 2.2K 1/16W 1608
R142	1-216-825-11	s	RESISTOR,CHIP 2.2K 1/16W 1608
R143	1-216-805-11	s	RESISTOR,CHIP 47 1/16W 1608
R144	1-216-805-11	s	RESISTOR,CHIP 47 1/16W 1608
R145	1-218-694-11	s	RESISTOR,CHIP 1.2K1/16W(1608)
R146	1-218-694-11	s	RESISTOR,CHIP 1.2K1/16W(1608)
R147	1-218-694-11	s	RESISTOR,CHIP 1.2K1/16W(1608)
R201	1-216-833-11	s	RESISTOR,CHIP 10K 1/16W (1608)
R202	1-216-809-11	s	RESISTOR,CHIP 100 1/16W 1608
R203	1-216-809-11	s	RESISTOR,CHIP 100 1/16W 1608
R204	1-216-833-11	s	RESISTOR,CHIP 10K 1/16W (1608)
R205	1-216-809-11	s	RESISTOR,CHIP 100 1/16W 1608
R206	1-216-833-11	s	RESISTOR,CHIP 10K 1/16W (1608)
R207	1-216-809-11	s	RESISTOR,CHIP 100 1/16W 1608
R210	1-216-809-11	s	RESISTOR,CHIP 100 1/16W 1608
R211	1-218-661-11	s	RESISTOR,CHIP 51 1/16W (1608)
R212	1-216-809-11	s	RESISTOR,CHIP 100 1/16W 1608
R213	1-216-833-11	s	RESISTOR,CHIP 10K 1/16W (1608)
R214	1-216-809-11	s	RESISTOR,CHIP 100 1/16W 1608
R215	1-216-833-11	s	RESISTOR,CHIP 10K 1/16W (1608)
R216	1-216-809-11	s	RESISTOR,CHIP 100 1/16W 1608
R217	1-218-731-11	s	RESISTOR,METAL 43K 1/16
R218	1-216-809-11	s	RESISTOR,CHIP 100 1/16W 1608
R219	1-216-809-11	s	RESISTOR,CHIP 100 1/16W 1608
R220	1-216-809-11	s	RESISTOR,CHIP 100 1/16W 1608
R221	1-216-809-11	s	RESISTOR,CHIP 100 1/16W 1608
R222	1-216-809-11	s	RESISTOR,CHIP 100 1/16W 1608
R223	1-216-809-11	s	RESISTOR,CHIP 100 1/16W 1608
R224	1-216-809-11	s	RESISTOR,CHIP 100 1/16W 1608
R225	1-216-809-11	s	RESISTOR,CHIP 100 1/16W 1608
R226	1-216-809-11	s	RESISTOR,CHIP 100 1/16W 1608
R227	1-216-833-11	s	RESISTOR,CHIP 10K 1/16W (1608)
R228	1-216-809-11	s	RESISTOR,CHIP 100 1/16W 1608
R229	1-216-809-11	s	RESISTOR,CHIP 100 1/16W 1608
R231	1-216-813-11	s	RESISTOR, CHIP 220 1/16W 1608
R232	1-216-809-11	s	RESISTOR,CHIP 100 1/16W 1608
R233	1-216-809-11	s	RESISTOR,CHIP 100 1/16W 1608
R234	1-216-822-11	s	RESISTOR, CHIP 1.2K 1/16W 1608
R235	1-216-827-11	s	RESISTOR, CHIP 3.3K 1/16W 1608
R236	1-218-685-11	s	RESISTOR,CHIP 510 1/16W
R237	1-216-827-11	s	RESISTOR, CHIP 3.3K 1/16W 1608
R238	1-218-685-11	s	RESISTOR,CHIP 510 1/16W
R239	1-216-813-11	s	RESISTOR, CHIP 220 1/16W 1608
R241	1-216-837-11	s	RESISTOR,CHIP 22K 1/16W 1608
R242	1-218-723-11	s	RESISTOR,CHIP 20K 1/16W(1608)
R243	1-216-837-11	s	RESISTOR,CHIP 22K 1/16W 1608
R244	1-218-723-11	s	RESISTOR,CHIP 20K 1/16W(1608)
R245	1-216-821-11	s	RESISTOR,CHIP 1.0K 1/16W(1608)
R246	1-218-692-11	s	RESISTOR,CHIP 1.0K 1/16W(1608)
R247	1-216-814-11	s	RESISTOR,CHIP 270 1/16W 1608
R248	1-216-814-11	s	RESISTOR,CHIP 270 1/16W 1608
R249	1-218-660-91	s	RESISTOR,CHIP 47 1/16W (1608)
R250	1-218-690-11	s	RESISTOR,CHIP 820 1/16W (1608)
R251	1-218-684-11	s	RESISTOR,CHIP 470 1/16W (1608)
R252	1-218-690-11	s	RESISTOR,CHIP 820 1/16W (1608)
R253	1-218-676-11	s	RESISTOR,CHIP 220 1/16W(1608)
R254	1-216-821-11	s	RESISTOR,CHIP 1.0K 1/16W(1608)
R255	1-216-825-11	s	RESISTOR,CHIP 2.2K 1/16W 1608
R256	1-216-825-11	s	RESISTOR,CHIP 2.2K 1/16W 1608

(BA BOARD)

Ref. No. or Q'ty	Part No.	SP	Description
R257	1-216-809-11	s	RESISTOR,CHIP 100 1/16W 1608
R258	1-216-809-11	s	RESISTOR,CHIP 100 1/16W 1608
R259	1-216-809-11	s	RESISTOR,CHIP 100 1/16W 1608
R301	1-216-821-11	s	RESISTOR,CHIP 1.0K 1/16W(1608)
R306	1-216-824-11	s	RESISTOR, CHIP 1.8K 1/16W 1608
R307	1-216-823-11	s	RESISTOR, CHIP 1.5K 1/16W
R308	1-216-824-11	s	RESISTOR, CHIP 1.8K 1/16W 1608
R309	1-216-817-11	s	RESISTOR,CHIP 470 1/16W 1608
R310	1-216-824-11	s	RESISTOR, CHIP 1.8K 1/16W 1608
R311	1-216-824-11	s	RESISTOR, CHIP 1.8K 1/16W 1608
R312	1-216-864-11	s	CONDUCTOR, CHIP (1608)
R313	1-216-809-11	s	RESISTOR,CHIP 100 1/16W 1608
R314	1-216-833-11	s	RESISTOR,CHIP 10K 1/16W (1608)
R315	1-216-809-11	s	RESISTOR,CHIP 100 1/16W 1608
R316	1-216-824-11	s	RESISTOR, CHIP 1.8K 1/16W 1608
R317	1-216-824-11	s	RESISTOR, CHIP 1.8K 1/16W 1608
R318	1-218-664-11	s	RESISTOR,CHIP 68 1/16W (1608)
R319	1-216-805-11	s	RESISTOR,CHIP 47 1/16W 1608
R320	1-216-864-11	s	CONDUCTOR, CHIP (1608)
R321	1-216-829-11	s	RESISTOR,CHIP 4.7K 1/16W(1608)
R322	1-216-821-11	s	RESISTOR,CHIP 1.0K 1/16W(1608)
R323	1-216-821-11	s	RESISTOR,CHIP 1.0K 1/16W(1608)
R324	1-218-686-11	s	RESISTOR CHIP 560 1/16W (1608)
R325	1-218-686-11	s	RESISTOR CHIP 560 1/16W (1608)
R326	1-216-817-11	s	RESISTOR,CHIP 470 1/16W 1608
R327	1-216-817-11	s	RESISTOR,CHIP 470 1/16W 1608
R328	1-216-821-11	s	RESISTOR,CHIP 1.0K 1/16W(1608)
R329	1-216-825-11	s	RESISTOR,CHIP 2.2K 1/16W 1608
R330	1-216-821-11	s	RESISTOR,CHIP 1.0K 1/16W(1608)
R331	1-216-841-11	s	RESISTOR, CHIP 47K 1/16W 1608
R332	1-216-849-11	s	RESISTOR,CHIP 220K 1/16W 1608
R333	1-216-809-11	s	RESISTOR,CHIP 100 1/16W 1608
R335	1-216-813-11	s	RESISTOR, CHIP 220 1/16W 1608
R336	1-218-710-11	s	RESISTOR,CHIP 5.6K 1/16W(1608)
R337	1-218-710-11	s	RESISTOR,CHIP 5.6K 1/16W(1608)
R338	1-216-825-11	s	RESISTOR,CHIP 2.2K 1/16W 1608
R339	1-216-825-11	s	RESISTOR,CHIP 2.2K 1/16W 1608
R340	1-218-696-11	s	RESISTOR,CHIP 1.5K 1/16W(1608)
R341	1-216-820-11	s	RESISTOR, CHIP 820 1/16W 1608
R342	1-218-686-11	s	RESISTOR CHIP 560 1/16W (1608)
R343	1-218-682-11	s	RESISTOR,CHIP 390 1/16W (1608)
R344	1-218-692-11	s	RESISTOR,CHIP 1.0K 1/16W(1608)
R346	1-218-674-11	s	RESISTOR CHIP 180 1/16W (1608)
R347	1-216-864-11	s	CONDUCTOR, CHIP (1608)
R348	1-218-710-11	s	RESISTOR,CHIP 5.6K 1/16W(1608)
R349	1-218-700-11	s	RESISTOR,CHIP 2.2K 1/16W(1608)
R350	1-216-820-11	s	RESISTOR, CHIP 820 1/16W 1608
R351	1-218-700-11	s	RESISTOR,CHIP 2.2K 1/16W(1608)
R352	1-216-820-11	s	RESISTOR, CHIP 820 1/16W 1608
R353	1-216-839-11	s	RESISTOR,CHIP 33K 1/16W 1608
R354	1-216-834-11	s	RESISTOR,CHIP 12K 1/16W 1608
R355	1-216-839-11	s	RESISTOR,CHIP 33K 1/16W 1608
R356	1-216-834-11	s	RESISTOR,CHIP 12K 1/16W 1608
R357	1-216-821-11	s	RESISTOR,CHIP 1.0K 1/16W(1608)
R358	1-216-821-11	s	RESISTOR,CHIP 1.0K 1/16W(1608)
R359	1-216-805-11	s	RESISTOR,CHIP 47 1/16W 1608
R360	1-218-686-11	s	RESISTOR CHIP 560 1/16W (1608)
R361	1-216-805-11	s	RESISTOR,CHIP 47 1/16W 1608
R362	1-216-821-11	s	RESISTOR,CHIP 1.0K 1/16W(1608)

(BA BOARD)

Ref. No. or Q'ty	Part No.	SP	Description
R363	1-216-809-11	s	RESISTOR,CHIP 100 1/16W 1608
R364	1-216-864-11	s	CONDUCTOR, CHIP (1608)
TP101	1-535-757-11	s	CHIP, CHECKER (CONNECTOR)
TP102	1-535-757-11	s	CHIP, CHECKER (CONNECTOR)
TP103	1-535-757-11	s	CHIP, CHECKER (CONNECTOR)
TP104	1-535-757-11	s	CHIP, CHECKER (CONNECTOR)
TP105	1-535-757-11	s	CHIP, CHECKER (CONNECTOR)
TP106	1-535-757-11	s	CHIP, CHECKER (CONNECTOR)
TP107	1-535-757-11	s	CHIP, CHECKER (CONNECTOR)
TP108	1-535-757-11	s	CHIP, CHECKER (CONNECTOR)
TP109	1-535-757-11	s	CHIP, CHECKER (CONNECTOR)
TP110	1-535-757-11	s	CHIP, CHECKER (CONNECTOR)
TP111	1-535-757-11	s	CHIP, CHECKER (CONNECTOR)
TP301	1-535-757-11	s	CHIP, CHECKER (CONNECTOR)
TP302	1-535-757-11	s	CHIP, CHECKER (CONNECTOR)
X101	1-781-914-21	s	VIBRATOR, CRYSTAL
X301	1-760-273-11	s	VIBRATOR, CRYSTAL

BB BOARD

Ref. No. or Q'ty	Part No.	SP	Description
1pc	A-1136-231-A	s	MOUNTED CIRCUIT BOARD, BB
C101	1-107-826-11	s	CAPACITOR,CHIP CERAMIC 0.1MF
C102	1-162-927-11	s	CAPACITOR,CERAMIC 100PF/50V CH
C103	1-107-826-11	s	CAPACITOR,CHIP CERAMIC 0.1MF
C104	1-162-927-11	s	CAPACITOR,CERAMIC 100PF/50V CH
C105	1-109-982-11	s	CAPACITOR,CHIP CERAMIC 1MF/10V
C106	1-128-994-11	s	CAP, ELECT 47MF/10V
C201	1-125-891-11	s	CAPACITOR CERAMIC 0.47MF/10V
C202	1-124-778-00	s	CAPACITOR,ELECT 22MF/6.3V
C203	1-165-176-11	s	CAPACITOR,CERAMIC 47000PF/16V
C204	1-164-505-11	s	CAPACITOR,CHIP CERAMIC 2.2MF
C205	1-165-176-11	s	CAPACITOR,CERAMIC 47000PF/16V
C206	1-107-826-11	s	CAPACITOR,CHIP CERAMIC 0.1MF
C207	1-165-176-11	s	CAPACITOR,CERAMIC 47000PF/16V
C208	1-162-970-11	s	CAPACITOR CERAMIC 0.01MF/25V B
C209	1-107-826-11	s	CAPACITOR,CHIP CERAMIC 0.1MF
C210	1-107-826-11	s	CAPACITOR,CHIP CERAMIC 0.1MF
C211	1-165-176-11	s	CAPACITOR,CERAMIC 47000PF/16V
C212	1-107-826-11	s	CAPACITOR,CHIP CERAMIC 0.1MF
C213	1-162-970-11	s	CAPACITOR CERAMIC 0.01MF/25V B
C214	1-107-826-11	s	CAPACITOR,CHIP CERAMIC 0.1MF
C215	1-162-970-11	s	CAPACITOR CERAMIC 0.01MF/25V B
C216	1-162-970-11	s	CAPACITOR CERAMIC 0.01MF/25V B
C217	1-107-826-11	s	CAPACITOR,CHIP CERAMIC 0.1MF
C218	1-127-692-11	s	CAP, CHIP CERAMIC 10MF B 3216
C219	1-107-826-11	s	CAPACITOR,CHIP CERAMIC 0.1MF
C220	1-126-205-11	s	CAPACITOR,ELECT 47M/6.3
C221	1-107-826-11	s	CAPACITOR,CHIP CERAMIC 0.1MF
C222	1-162-970-11	s	CAPACITOR CERAMIC 0.01MF/25V B
C223	1-107-826-11	s	CAPACITOR,CHIP CERAMIC 0.1MF
C224	1-164-173-11	s	CAPACITOR,CERAMIC 3900PF/50V B
C225	1-137-652-91	s	CAPACITOR,CERAMIC 39000PF /16V
C226	1-107-826-11	s	CAPACITOR,CHIP CERAMIC 0.1MF
C227	1-107-826-11	s	CAPACITOR,CHIP CERAMIC 0.1MF
C228	1-162-970-11	s	CAPACITOR CERAMIC 0.01MF/25V B
C229	1-107-826-11	s	CAPACITOR,CHIP CERAMIC 0.1MF
C230	1-162-970-11	s	CAPACITOR CERAMIC 0.01MF/25V B
C231	1-162-970-11	s	CAPACITOR CERAMIC 0.01MF/25V B
C232	1-107-826-11	s	CAPACITOR,CHIP CERAMIC 0.1MF
C233	1-107-826-11	s	CAPACITOR,CHIP CERAMIC 0.1MF
C234	1-162-970-11	s	CAPACITOR CERAMIC 0.01MF/25V B
C235	1-107-826-11	s	CAPACITOR,CHIP CERAMIC 0.1MF
C236	1-162-970-11	s	CAPACITOR CERAMIC 0.01MF/25V B
C237	1-164-505-11	s	CAPACITOR,CHIP CERAMIC 2.2MF
C401	1-162-916-11	s	CAPACITOR,CERAMIC 12PF/50V CH
C402	1-162-916-11	s	CAPACITOR,CERAMIC 12PF/50V CH
C403	1-107-826-11	s	CAPACITOR,CHIP CERAMIC 0.1MF
C404	1-162-970-11	s	CAPACITOR CERAMIC 0.01MF/25V B
C501	1-126-205-11	s	CAPACITOR,ELECT 47M/6.3
C503	1-126-205-11	s	CAPACITOR,ELECT 47M/6.3
C504	1-107-826-11	s	CAPACITOR,CHIP CERAMIC 0.1MF
C505	1-107-826-11	s	CAPACITOR,CHIP CERAMIC 0.1MF
C506	1-107-826-11	s	CAPACITOR,CHIP CERAMIC 0.1MF
C508	1-107-826-11	s	CAPACITOR,CHIP CERAMIC 0.1MF
C509	1-107-826-11	s	CAPACITOR,CHIP CERAMIC 0.1MF
C510	1-107-826-11	s	CAPACITOR,CHIP CERAMIC 0.1MF
C511	1-107-826-11	s	CAPACITOR,CHIP CERAMIC 0.1MF
C512	1-107-826-11	s	CAPACITOR,CHIP CERAMIC 0.1MF

(BB BOARD)

Ref. No. or Q'ty	Part No.	SP	Description
C513	1-107-826-11	s	CAPACITOR,CHIP CERAMIC 0.1MF
C514	1-107-826-11	s	CAPACITOR,CHIP CERAMIC 0.1MF
C515	1-107-826-11	s	CAPACITOR,CHIP CERAMIC 0.1MF
C516	1-107-826-11	s	CAPACITOR,CHIP CERAMIC 0.1MF
C517	1-107-826-11	s	CAPACITOR,CHIP CERAMIC 0.1MF
C518	1-107-826-11	s	CAPACITOR,CHIP CERAMIC 0.1MF
C519	1-126-205-11	s	CAPACITOR,ELECT 47M/6.3
C520	1-107-826-11	s	CAPACITOR,CHIP CERAMIC 0.1MF
C521	1-107-826-11	s	CAPACITOR,CHIP CERAMIC 0.1MF
C522	1-107-826-11	s	CAPACITOR,CHIP CERAMIC 0.1MF
C523	1-107-826-11	s	CAPACITOR,CHIP CERAMIC 0.1MF
C524	1-107-826-11	s	CAPACITOR,CHIP CERAMIC 0.1MF
C525	1-107-826-11	s	CAPACITOR,CHIP CERAMIC 0.1MF
C526	1-107-826-11	s	CAPACITOR,CHIP CERAMIC 0.1MF
C527	1-107-826-11	s	CAPACITOR,CHIP CERAMIC 0.1MF
C528	1-107-826-11	s	CAPACITOR,CHIP CERAMIC 0.1MF
C529	1-107-826-11	s	CAPACITOR,CHIP CERAMIC 0.1MF
C530	1-126-205-11	s	CAPACITOR,ELECT 47M/6.3
C531	1-107-826-11	s	CAPACITOR,CHIP CERAMIC 0.1MF
C533	1-107-826-11	s	CAPACITOR,CHIP CERAMIC 0.1MF
C535	1-107-826-11	s	CAPACITOR,CHIP CERAMIC 0.1MF
C536	1-107-826-11	s	CAPACITOR,CHIP CERAMIC 0.1MF
C537	1-107-826-11	s	CAPACITOR,CHIP CERAMIC 0.1MF
C538	1-107-826-11	s	CAPACITOR,CHIP CERAMIC 0.1MF
C539	1-107-826-11	s	CAPACITOR,CHIP CERAMIC 0.1MF
C540	1-126-205-11	s	CAPACITOR,ELECT 47M/6.3
C541	1-107-826-11	s	CAPACITOR,CHIP CERAMIC 0.1MF
C542	1-107-826-11	s	CAPACITOR,CHIP CERAMIC 0.1MF
C543	1-107-826-11	s	CAPACITOR,CHIP CERAMIC 0.1MF
C544	1-107-826-11	s	CAPACITOR,CHIP CERAMIC 0.1MF
C545	1-107-826-11	s	CAPACITOR,CHIP CERAMIC 0.1MF
CN101	1-793-797-21	o	CONNECTOR, BOARD TO BOARD
CN102	1-770-449-21	o	CONNECTOR, BOARD TO BOARD 70P
CN103	1-568-323-51	s	CONNECTOR, BOARD TO BOARD 4P
CN401	1-770-620-21	s	PIN, CONNECTOR 3P
CN403	1-815-354-11	o	CONNECTOR, BOARD TO BOARD 50P
D401	8-719-914-43	s	DIODE DAN202K
FB101	1-414-921-11	s	INDUCTOR, FERRITE BEAD
FB102	1-414-921-11	s	INDUCTOR, FERRITE BEAD
FB201	1-414-748-11	s	INDUCTOR, MICRO (CHIP TYPE)
FB202	1-414-748-11	s	INDUCTOR, MICRO (CHIP TYPE)
FB203	1-414-748-11	s	INDUCTOR, MICRO (CHIP TYPE)
FB204	1-414-921-11	s	INDUCTOR, FERRITE BEAD
FB205	1-414-921-11	s	INDUCTOR, FERRITE BEAD
FB206	1-414-921-11	s	INDUCTOR, FERRITE BEAD
FB401	1-414-921-11	s	INDUCTOR, FERRITE BEAD
FB501	1-500-451-11	s	MICRO INDUCTOR (CHIP) 41P750S
FB502	1-500-451-11	s	MICRO INDUCTOR (CHIP) 41P750S
FB503	1-414-921-11	s	INDUCTOR, FERRITE BEAD
FB504	1-500-451-11	s	MICRO INDUCTOR (CHIP) 41P750S
FB505	1-414-921-11	s	INDUCTOR, FERRITE BEAD
FB506	1-414-921-11	s	INDUCTOR, FERRITE BEAD
IC102	8-759-681-47	s	IC IRMF-A0T-QTP
IC201	8-759-652-56	s	IC BA033F-E2
IC202	8-759-659-65	s	IC LP2985IM5X-3.3
IC203	8-759-670-41	s	IC AD9884AKS-100
IC204	8-759-472-14	s	IC 74VHC125MTCX

(BB BOARD)

Ref. No. or Q'ty	Part No.	SP	Description
IC401	8-759-544-01	s	IC S-80828ANNP-EDR-T2
IC402	8-759-472-00	s	IC 74VHC14MTCX
IC403	8-759-683-96	s	IC MK1714-01RT
IC404	8-759-582-37	s	IC PQ2TZ15U
IC405	6-701-045-01	s	IC PW365-10U
IC406	6-800-755-02	s	IC MBM29LV800TA-90PFTN-SX1719
IC408	8-759-471-96	s	IC 74VHC08MTCX
L201	1-412-057-11	s	INDUCTOR (SMALL TYPE) 6.8UH
Q201	8-729-427-72	s	TRANSISTOR XP4501-TXE
Q202	8-729-907-00	s	TRANSISTOR DTC114EU
R101	1-216-801-11	s	RESISTOR,CHIP 22 1/16W (1608)
R102	1-216-809-11	s	RESISTOR,CHIP 100 1/16W 1608
R103	1-216-809-11	s	RESISTOR,CHIP 100 1/16W 1608
R104	1-216-809-11	s	RESISTOR,CHIP 100 1/16W 1608
R105	1-216-809-11	s	RESISTOR,CHIP 100 1/16W 1608
R106	1-216-841-11	s	RESISTOR, CHIP 47K 1/16W 1608
R107	1-216-830-11	s	RESISTOR,CHIP 5.6K 1/16W 1608
R108	1-216-841-11	s	RESISTOR, CHIP 47K 1/16W 1608
R109	1-216-809-11	s	RESISTOR,CHIP 100 1/16W 1608
R110	1-216-809-11	s	RESISTOR,CHIP 100 1/16W 1608
R111	1-216-809-11	s	RESISTOR,CHIP 100 1/16W 1608
R201	1-216-631-11	s	RESISTOR,CHIP 150 1/10W (2012)
R202	1-216-631-11	s	RESISTOR,CHIP 150 1/10W (2012)
R203	1-216-631-11	s	RESISTOR,CHIP 150 1/10W (2012)
R204	1-216-631-11	s	RESISTOR,CHIP 150 1/10W (2012)
R205	1-216-631-11	s	RESISTOR,CHIP 150 1/10W (2012)
R206	1-216-631-11	s	RESISTOR,CHIP 150 1/10W (2012)
R207	1-216-809-11	s	RESISTOR,CHIP 100 1/16W 1608
R208	1-216-805-11	s	RESISTOR,CHIP 47 1/16W 1608
R209	1-216-845-11	s	RESISTOR,CHIP 100K 1/16W(1608)
R211	1-216-805-11	s	RESISTOR,CHIP 47 1/16W 1608
R212	1-216-801-11	s	RESISTOR,CHIP 22 1/16W (1608)
R213	1-216-801-11	s	RESISTOR,CHIP 22 1/16W (1608)
R214	1-216-851-11	s	RESISTOR,CHIP 330K 1/16W 1608
R215	1-216-809-11	s	RESISTOR,CHIP 100 1/16W 1608
R216	1-216-833-11	s	RESISTOR,CHIP 10K 1/16W (1608)
R218	1-216-809-11	s	RESISTOR,CHIP 100 1/16W 1608
R219	1-216-805-11	s	RESISTOR,CHIP 47 1/16W 1608
R220	1-216-833-11	s	RESISTOR,CHIP 10K 1/16W (1608)
R221	1-216-825-11	s	RESISTOR,CHIP 2.2K 1/16W 1608
R222	1-218-704-11	s	RESISTOR,CHIP 3.3K 1/16W(1608)
R223	1-216-805-11	s	RESISTOR,CHIP 47 1/16W 1608
R224	1-216-805-11	s	RESISTOR,CHIP 47 1/16W 1608
R225	1-216-801-11	s	RESISTOR,CHIP 22 1/16W (1608)
R226	1-216-809-11	s	RESISTOR,CHIP 100 1/16W 1608
R227	1-216-809-11	s	RESISTOR,CHIP 100 1/16W 1608
R401	1-216-809-11	s	RESISTOR,CHIP 100 1/16W 1608
R402	1-216-864-11	s	CONDUCTOR, CHIP (1608)
R403	1-216-864-11	s	CONDUCTOR, CHIP (1608)
R404	1-216-829-11	s	RESISTOR,CHIP 4.7K 1/16W(1608)
R405	1-216-864-11	s	CONDUCTOR, CHIP (1608)
R406	1-216-864-11	s	CONDUCTOR, CHIP (1608)
R408	1-216-809-11	s	RESISTOR,CHIP 100 1/16W 1608
R409	1-216-809-11	s	RESISTOR,CHIP 100 1/16W 1608
R410	1-216-809-11	s	RESISTOR,CHIP 100 1/16W 1608
R411	1-216-809-11	s	RESISTOR,CHIP 100 1/16W 1608
R413	1-216-821-11	s	RESISTOR,CHIP 1.0K 1/16W(1608)

(BB BOARD)

Ref. No. or Q'ty	Part No.	SP	Description
R414	1-216-821-11	s	RESISTOR,CHIP 1.0K 1/16W(1608)
R415	1-216-805-11	s	RESISTOR,CHIP 47 1/16W 1608
R416	1-216-821-11	s	RESISTOR,CHIP 1.0K 1/16W(1608)
R417	1-216-801-11	s	RESISTOR,CHIP 22 1/16W (1608)
R418	1-216-809-11	s	RESISTOR,CHIP 100 1/16W 1608
R419	1-216-809-11	s	RESISTOR,CHIP 100 1/16W 1608
R420	1-216-805-11	s	RESISTOR,CHIP 47 1/16W 1608
R423	1-216-821-11	s	RESISTOR,CHIP 1.0K 1/16W(1608)
R424	1-216-821-11	s	RESISTOR,CHIP 1.0K 1/16W(1608)
R425	1-216-821-11	s	RESISTOR,CHIP 1.0K 1/16W(1608)
R430	1-216-821-11	s	RESISTOR,CHIP 1.0K 1/16W(1608)
R501	1-216-809-11	s	RESISTOR,CHIP 100 1/16W 1608
R502	1-216-809-11	s	RESISTOR,CHIP 100 1/16W 1608
R503	1-216-809-11	s	RESISTOR,CHIP 100 1/16W 1608
R504	1-216-809-11	s	RESISTOR,CHIP 100 1/16W 1608
R505	1-216-832-11	s	RESISTOR,CHIP 8.2K 1/16W 1608
R506	1-216-833-11	s	RESISTOR,CHIP 10K 1/16W (1608)
R508	1-216-809-11	s	RESISTOR,CHIP 100 1/16W 1608
R510	1-216-809-11	s	RESISTOR,CHIP 100 1/16W 1608
R511	1-216-809-11	s	RESISTOR,CHIP 100 1/16W 1608
R512	1-216-827-11	s	RESISTOR, CHIP 3.3K 1/16W 1608
R513	1-216-827-11	s	RESISTOR, CHIP 3.3K 1/16W 1608
R514	1-216-809-11	s	RESISTOR,CHIP 100 1/16W 1608
R515	1-216-805-11	s	RESISTOR,CHIP 47 1/16W 1608
R523	1-216-801-11	s	RESISTOR,CHIP 22 1/16W (1608)
R524	1-216-801-11	s	RESISTOR,CHIP 22 1/16W (1608)
R532	1-216-864-11	s	CONDUCTOR, CHIP (1608)
R533	1-216-829-11	s	RESISTOR,CHIP 4.7K 1/16W(1608)
R535	1-216-829-11	s	RESISTOR,CHIP 4.7K 1/16W(1608)
R538	1-216-864-11	s	CONDUCTOR, CHIP (1608)
R539	1-216-829-11	s	RESISTOR,CHIP 4.7K 1/16W(1608)
R541	1-216-864-11	s	CONDUCTOR, CHIP (1608)
R542	1-216-829-11	s	RESISTOR,CHIP 4.7K 1/16W(1608)
R544	1-216-864-11	s	CONDUCTOR, CHIP (1608)
R545	1-216-864-11	s	CONDUCTOR, CHIP (1608)
R546	1-216-864-11	s	CONDUCTOR, CHIP (1608)
R547	1-216-864-11	s	CONDUCTOR, CHIP (1608)
R550	1-216-864-11	s	CONDUCTOR, CHIP (1608)
R551	1-216-864-11	s	CONDUCTOR, CHIP (1608)
R552	1-216-864-11	s	CONDUCTOR, CHIP (1608)
R553	1-216-864-11	s	CONDUCTOR, CHIP (1608)
R554	1-216-825-11	s	RESISTOR,CHIP 2.2K 1/16W 1608
R556	1-216-864-11	s	CONDUCTOR, CHIP (1608)
R557	1-216-809-11	s	RESISTOR,CHIP 100 1/16W 1608
RB201	1-233-575-11	s	RES, CHIP NETWORK 22
RB202	1-233-575-11	s	RES, CHIP NETWORK 22
RB203	1-233-575-11	s	RES, CHIP NETWORK 22
RB204	1-233-575-11	s	RES, CHIP NETWORK 22
RB205	1-233-575-11	s	RES, CHIP NETWORK 22
RB206	1-233-575-11	s	RES, CHIP NETWORK 22
RB207	1-233-575-11	s	RES, CHIP NETWORK 22
RB208	1-233-575-11	s	RES, CHIP NETWORK 22
RB209	1-233-575-11	s	RES, CHIP NETWORK 22
RB210	1-233-575-11	s	RES, CHIP NETWORK 22
RB211	1-233-575-11	s	RES, CHIP NETWORK 22
RB212	1-233-575-11	s	RES, CHIP NETWORK 22
RB402	1-233-574-11	s	RESISTOR,CHIP NETWORK 10
RB403	1-233-574-11	s	RESISTOR,CHIP NETWORK 10
RB404	1-233-574-11	s	RESISTOR,CHIP NETWORK 10

(BB BOARD)

Ref. No. or Q'ty	Part No.	SP	Description
RB405	1-233-574-11	s	RESISTOR,CHIP NETWORK 10
RB406	1-233-574-11	s	RESISTOR,CHIP NETWORK 10
RB407	1-233-574-11	s	RESISTOR,CHIP NETWORK 10
TP101	1-535-757-11	s	CHIP, CHECKER (CONNECTOR)
TP102	1-535-757-11	s	CHIP, CHECKER (CONNECTOR)
TP112	1-535-757-11	s	CHIP, CHECKER (CONNECTOR)
TP201	1-535-757-11	s	CHIP, CHECKER (CONNECTOR)
TP202	1-535-757-11	s	CHIP, CHECKER (CONNECTOR)
TP203	1-535-757-11	s	CHIP, CHECKER (CONNECTOR)
TP204	1-535-757-11	s	CHIP, CHECKER (CONNECTOR)
TP205	1-535-757-11	s	CHIP, CHECKER (CONNECTOR)
TP206	1-535-757-11	s	CHIP, CHECKER (CONNECTOR)
TP207	1-535-757-11	s	CHIP, CHECKER (CONNECTOR)
TP401	1-535-757-11	s	CHIP, CHECKER (CONNECTOR)
X201	1-767-908-11	s	VIBRATOR, CRYSTAL 13.08384MHZ
X501	1-795-282-21	s	OSCILLATOR, CRYSTAL

BC BOARD

Ref. No. or Q'ty	Part No.	SP	Description
1pc	A-1136-232-A	s	MOUNTED CIRCUIT BOARD, BC
1pc	7-682-648-09	s	SCREW +PS 3X8(EP-FE/ZNBK/CM2)
C801	1-124-779-00	s	CAPACITOR,ELECT 10MF/16V
C802	1-124-779-00	s	CAPACITOR,ELECT 10MF/16V
C803	1-124-779-00	s	CAPACITOR,ELECT 10MF/16V
C804	1-162-970-11	s	CAPACITOR CERAMIC 0.01MF/25V B
C805	1-126-204-11	s	CAPACITOR, ELECT 47MF/16V(CHIP
C806	1-107-826-11	s	CAPACITOR,CHIP CERAMIC 0.1MF
C807	1-125-889-11	s	CAPACITOR, C.CERAMIC 2.2MF
C808	1-125-889-11	s	CAPACITOR, C.CERAMIC 2.2MF
C809	1-164-677-11	s	CAPACITOR,CERAMIC 0.033MF/16V
C810	1-162-970-11	s	CAPACITOR CERAMIC 0.01MF/25V B
C811	1-126-397-11	s	CAPACITOR ELECT 33MF/25V(CHIP)
C812	1-111-066-11	s	CAPACITOR,ELECT 820MF/25V 105
C813	1-164-156-11	s	CAPACITOR,CERAMIC 0.1MF/25V F
C814	1-164-227-11	s	CAPACITOR,CERAMIC 0.022MF/25V
C815	1-164-227-11	s	CAPACITOR,CERAMIC 0.022MF/25V
C816	1-111-066-11	s	CAPACITOR,ELECT 820MF/25V 105
C818	1-126-200-11	s	CAPACITOR,ELECT 10MF/35V
C819	1-115-340-11	s	CAPACITOR CERAMIC 0.22MF/25V B
C820	1-115-340-11	s	CAPACITOR CERAMIC 0.22MF/25V B
C821	1-126-200-11	s	CAPACITOR,ELECT 10MF/35V
C822	1-111-066-11	s	CAPACITOR,ELECT 820MF/25V 105
C823	1-128-401-11	s	CAPACITOR,ELECT100MF/25V(CHIP)
C825	1-128-399-11	s	CAPACITOR ELECT 330MF/16V(CHIP
C826	1-128-399-11	s	CAPACITOR ELECT 330MF/16V(CHIP
CN801	1-793-797-21	o	CONNECTOR, BOARD TO BOARD
IC801	8-752-091-06	s	IC CXA1846BN-T4
IC802	8-759-980-43	s	IC TDA2009A
IC803	8-759-388-31	s	IC PQ20VZ1U
L801	1-412-028-11	s	INDUCTOR,CHIP 4.7UH (3225)
L802	1-406-980-51	s	COIL, CHOKE 330UH
Q803	8-729-013-28	s	TRANSISTOR HN1B01FU-TE85R
R807	1-216-809-11	s	RESISTOR,CHIP 100 1/16W 1608
R808	1-216-809-11	s	RESISTOR,CHIP 100 1/16W 1608
R809	1-216-809-11	s	RESISTOR,CHIP 100 1/16W 1608
R810	1-216-833-11	s	RESISTOR,CHIP 10K 1/16W (1608)
R811	1-216-833-11	s	RESISTOR,CHIP 10K 1/16W (1608)
R812	1-216-834-11	s	RESISTOR,CHIP 12K 1/16W 1608
R813	1-216-834-11	s	RESISTOR,CHIP 12K 1/16W 1608
R814	1-216-824-11	s	RESISTOR, CHIP 1.8K 1/16W 1608
R815	1-216-824-11	s	RESISTOR, CHIP 1.8K 1/16W 1608
R816	1-216-845-11	s	RESISTOR,CHIP 100K 1/16W(1608)
R817	1-216-833-11	s	RESISTOR,CHIP 10K 1/16W (1608)
R818	1-216-823-11	s	RESISTOR, CHIP 1.5K 1/16W
R819	1-216-827-11	s	RESISTOR, CHIP 3.3K 1/16W 1608
R820	1-216-833-11	s	RESISTOR,CHIP 10K 1/16W (1608)
R821	1-216-829-11	s	RESISTOR,CHIP 4.7K 1/16W(1608)
R822	1-218-716-11	s	RESISTOR,CHIP 10K 1/16W(1608)
R823	1-218-717-11	s	RESISTOR,CHIP 11K 1/16W (1608)
R824	1-218-685-11	s	RESISTOR,CHIP 510 1/16W
R825	1-216-800-11	s	RESISTOR,CHIP 18 1/16W 1608
R826	1-218-231-11	s	RESISTOR, CHIP 1 1/2W (4532)
R827	1-218-231-11	s	RESISTOR, CHIP 1 1/2W (4532)
R828	1-216-800-11	s	RESISTOR,CHIP 18 1/16W 1608
R829	1-216-822-11	s	RESISTOR, CHIP 1.2K 1/16W 1608

(BC BOARD)

Ref. No. or Q'ty	Part No.	SP	Description
R830	1-216-822-11	s	RESISTOR, CHIP 1.2K 1/16W 1608
TP801	1-535-757-11	s	CHIP, CHECKER (CONNECTOR)
TP802	1-535-757-11	s	CHIP, CHECKER (CONNECTOR)
TP803	1-535-757-11	s	CHIP, CHECKER (CONNECTOR)
TP804	1-535-757-11	s	CHIP, CHECKER (CONNECTOR)
TP805	1-535-757-11	s	CHIP, CHECKER (CONNECTOR)
TP806	1-535-757-11	s	CHIP, CHECKER (CONNECTOR)
TP807	1-535-757-11	s	CHIP, CHECKER (CONNECTOR)

C BOARD

Ref. No. or Q'ty	Part No.	SP	Description
1pc	A-1335-148-A	s	MOUNTED CIRCUIT BOARD, C
C102	1-128-992-11	s	CAPACITOR ELECT 47MF 25V
C103	1-126-204-11	s	CAPACITOR, ELECT 47MF/16V(CHIP
C104	1-162-970-11	s	CAPACITOR CERAMIC 0.01MF/25V B
C105	1-164-156-11	s	CAPACITOR,CERAMIC 0.1MF/25V F
C106	1-164-156-11	s	CAPACITOR,CERAMIC 0.1MF/25V F
C107	1-164-156-11	s	CAPACITOR,CERAMIC 0.1MF/25V F
C108	1-128-995-11	s	CAPACITOR ELECT 100MF / 10 V
C109	1-107-826-11	s	CAPACITOR,CHIP CERAMIC 0.1MF
C110	1-126-205-11	s	CAPACITOR,ELECT 47M/6.3
C111	1-107-826-11	s	CAPACITOR,CHIP CERAMIC 0.1MF
C112	1-128-995-11	s	CAPACITOR ELECT 100MF / 10 V
C113	1-107-826-11	s	CAPACITOR,CHIP CERAMIC 0.1MF
C114	1-126-205-11	s	CAPACITOR,ELECT 47M/6.3
C115	1-107-826-11	s	CAPACITOR,CHIP CERAMIC 0.1MF
C116	1-107-826-11	s	CAPACITOR,CHIP CERAMIC 0.1MF
C117	1-107-826-11	s	CAPACITOR,CHIP CERAMIC 0.1MF
C118	1-164-004-11	s	CAPACITOR,CERAMIC 0.1MF/25V
C119	1-126-397-11	s	CAPACITOR ELECT 33MF/25V(CHIP)
C120	1-126-397-11	s	CAPACITOR ELECT 33MF/25V(CHIP)
C121	1-164-004-11	s	CAPACITOR,CERAMIC 0.1MF/25V
C122	1-117-681-11	s	CAPACITOR, ELECT 100MF/16V
C123	1-164-004-11	s	CAPACITOR,CERAMIC 0.1MF/25V
C124	1-107-826-11	s	CAPACITOR,CHIP CERAMIC 0.1MF
C125	1-107-826-11	s	CAPACITOR,CHIP CERAMIC 0.1MF
C127	1-126-205-11	s	CAPACITOR,ELECT 47M/6.3
C128	1-107-826-11	s	CAPACITOR,CHIP CERAMIC 0.1MF
C129	1-162-970-11	s	CAPACITOR CERAMIC 0.01MF/25V B
C201	1-109-982-11	s	CAPACITOR,CHIP CERAMIC 1MF/10V
C202	1-109-982-11	s	CAPACITOR,CHIP CERAMIC 1MF/10V
C203	1-125-889-11	s	CAPACITOR, C.CERAMIC 2.2MF
C204	1-109-982-11	s	CAPACITOR,CHIP CERAMIC 1MF/10V
C205	1-162-970-11	s	CAPACITOR CERAMIC 0.01MF/25V B
C206	1-115-566-11	s	CAPACITOR,CERAMIC 4.7MF B/6.3V
C207	1-107-826-11	s	CAPACITOR,CHIP CERAMIC 0.1MF
C208	1-107-826-11	s	CAPACITOR,CHIP CERAMIC 0.1MF
C209	1-107-826-11	s	CAPACITOR,CHIP CERAMIC 0.1MF
C210	1-162-915-11	s	CAPACITOR,CERAMIC 10PF/50V CH
C211	1-107-826-11	s	CAPACITOR,CHIP CERAMIC 0.1MF
C212	1-162-915-11	s	CAPACITOR,CERAMIC 10PF/50V CH
C213	1-162-970-11	s	CAPACITOR CERAMIC 0.01MF/25V B
C214	1-164-315-11	s	CAPACITOR,CERAMIC 470PF/50V CH
C215	1-107-826-11	s	CAPACITOR,CHIP CERAMIC 0.1MF
C216	1-107-826-11	s	CAPACITOR,CHIP CERAMIC 0.1MF
C217	1-107-826-11	s	CAPACITOR,CHIP CERAMIC 0.1MF
C301	1-107-826-11	s	CAPACITOR,CHIP CERAMIC 0.1MF
C302	1-109-982-11	s	CAPACITOR,CHIP CERAMIC 1MF/10V
C303	1-107-826-11	s	CAPACITOR,CHIP CERAMIC 0.1MF
C305	1-162-970-11	s	CAPACITOR CERAMIC 0.01MF/25V B
C306	1-107-826-11	s	CAPACITOR,CHIP CERAMIC 0.1MF
C307	1-107-826-11	s	CAPACITOR,CHIP CERAMIC 0.1MF
C308	1-107-826-11	s	CAPACITOR,CHIP CERAMIC 0.1MF
C309	1-107-826-11	s	CAPACITOR,CHIP CERAMIC 0.1MF
C310	1-107-826-11	s	CAPACITOR,CHIP CERAMIC 0.1MF
C311	1-107-826-11	s	CAPACITOR,CHIP CERAMIC 0.1MF
C312	1-107-826-11	s	CAPACITOR,CHIP CERAMIC 0.1MF
C313	1-107-826-11	s	CAPACITOR,CHIP CERAMIC 0.1MF
C314	1-107-826-11	s	CAPACITOR,CHIP CERAMIC 0.1MF

(C BOARD)

Ref. No. or Q'ty	Part No.	SP	Description
C315	1-126-205-11	s	CAPACITOR,ELECT 47M/6.3
C316	1-107-826-11	s	CAPACITOR,CHIP CERAMIC 0.1MF
C317	1-107-826-11	s	CAPACITOR,CHIP CERAMIC 0.1MF
C318	1-107-826-11	s	CAPACITOR,CHIP CERAMIC 0.1MF
C319	1-162-910-11	s	CAPACITOR,CERAMIC 5PF/50V 1608
C320	1-107-826-11	s	CAPACITOR,CHIP CERAMIC 0.1MF
C321	1-126-205-11	s	CAPACITOR,ELECT 47M/6.3
C322	1-107-826-11	s	CAPACITOR,CHIP CERAMIC 0.1MF
C401	1-126-205-11	s	CAPACITOR,ELECT 47M/6.3
C402	1-107-826-11	s	CAPACITOR,CHIP CERAMIC 0.1MF
C403	1-164-156-11	s	CAPACITOR,CERAMIC 0.1MF/25V F
C404	1-107-826-11	s	CAPACITOR,CHIP CERAMIC 0.1MF
C405	1-107-826-11	s	CAPACITOR,CHIP CERAMIC 0.1MF
C406	1-126-205-11	s	CAPACITOR,ELECT 47M/6.3
C407	1-135-347-11	s	CAP, SOLID ELECT 82MF
C408	1-162-970-11	s	CAPACITOR CERAMIC 0.01MF/25V B
C409	1-126-602-11	s	CAPACITOR,ELECT 3.3MF/50V(CHIP
C410	1-162-970-11	s	CAPACITOR CERAMIC 0.01MF/25V B
C411	1-107-826-11	s	CAPACITOR,CHIP CERAMIC 0.1MF
C412	1-124-779-00	s	CAPACITOR,ELECT 10MF/16V
C413	1-126-602-11	s	CAPACITOR,ELECT 3.3MF/50V(CHIP
C414	1-162-970-11	s	CAPACITOR CERAMIC 0.01MF/25V B
C415	1-115-467-11	s	CAPACITOR CERAMIC 0.22MF/10V B
C416	1-107-826-11	s	CAPACITOR,CHIP CERAMIC 0.1MF
C417	1-124-779-00	s	CAPACITOR,ELECT 10MF/16V
C418	1-126-602-11	s	CAPACITOR,ELECT 3.3MF/50V(CHIP
C419	1-115-467-11	s	CAPACITOR CERAMIC 0.22MF/10V B
C420	1-162-970-11	s	CAPACITOR CERAMIC 0.01MF/25V B
C421	1-124-779-00	s	CAPACITOR,ELECT 10MF/16V
C422	1-107-826-11	s	CAPACITOR,CHIP CERAMIC 0.1MF
C423	1-126-205-11	s	CAPACITOR,ELECT 47M/6.3
C424	1-162-970-11	s	CAPACITOR CERAMIC 0.01MF/25V B
C501	1-107-826-11	s	CAPACITOR,CHIP CERAMIC 0.1MF
C502	1-107-826-11	s	CAPACITOR,CHIP CERAMIC 0.1MF
C503	1-128-992-11	s	CAPACITOR ELECT 47MF 25V
C504	1-107-826-11	s	CAPACITOR,CHIP CERAMIC 0.1MF
C505	1-107-826-11	s	CAPACITOR,CHIP CERAMIC 0.1MF
C506	1-162-925-11	s	CAPACITOR,CERAMIC 68PF/50V CH
C507	1-164-156-11	s	CAPACITOR,CERAMIC 0.1MF/25V F
C508	1-128-992-11	s	CAPACITOR ELECT 47MF 25V
C510	1-127-760-11	s	CAPACITOR,CERAMIC 4.7MF/6.3V
C511	1-115-467-11	s	CAPACITOR CERAMIC 0.22MF/10V B
C512	1-164-156-11	s	CAPACITOR,CERAMIC 0.1MF/25V F
C513	1-107-826-11	s	CAPACITOR,CHIP CERAMIC 0.1MF
C514	1-107-826-11	s	CAPACITOR,CHIP CERAMIC 0.1MF
C515	1-164-156-11	s	CAPACITOR,CERAMIC 0.1MF/25V F
C516	1-162-970-11	s	CAPACITOR CERAMIC 0.01MF/25V B
C517	1-164-156-11	s	CAPACITOR,CERAMIC 0.1MF/25V F
C518	1-107-826-11	s	CAPACITOR,CHIP CERAMIC 0.1MF
C519	1-115-340-11	s	CAPACITOR CERAMIC 0.22MF/25V B
C521	1-164-156-11	s	CAPACITOR,CERAMIC 0.1MF/25V F
C522	1-115-467-11	s	CAPACITOR CERAMIC 0.22MF/10V B
C523	1-115-467-11	s	CAPACITOR CERAMIC 0.22MF/10V B
C524	1-117-681-11	s	CAPACITOR, ELECT 100MF/16V
C525	1-164-156-11	s	CAPACITOR,CERAMIC 0.1MF/25V F
C526	1-164-156-11	s	CAPACITOR,CERAMIC 0.1MF/25V F
C601	1-107-826-11	s	CAPACITOR,CHIP CERAMIC 0.1MF
C602	1-107-826-11	s	CAPACITOR,CHIP CERAMIC 0.1MF
C603	1-128-992-11	s	CAPACITOR ELECT 47MF 25V

(C BOARD)

Ref. No. or Q'ty	Part No.	SP	Description
C604	1-107-826-11	s	CAPACITOR,CHIP CERAMIC 0.1MF
C605	1-107-826-11	s	CAPACITOR,CHIP CERAMIC 0.1MF
C606	1-162-925-11	s	CAPACITOR,CERAMIC 68PF/50V CH
C607	1-164-156-11	s	CAPACITOR,CERAMIC 0.1MF/25V F
C608	1-128-992-11	s	CAPACITOR ELECT 47MF 25V
C610	1-127-760-11	s	CAPACITOR,CERAMIC 4.7MF/6.3V
C611	1-115-467-11	s	CAPACITOR CERAMIC 0.22MF/10V B
C612	1-164-156-11	s	CAPACITOR,CERAMIC 0.1MF/25V F
C613	1-107-826-11	s	CAPACITOR,CHIP CERAMIC 0.1MF
C614	1-107-826-11	s	CAPACITOR,CHIP CERAMIC 0.1MF
C615	1-164-156-11	s	CAPACITOR,CERAMIC 0.1MF/25V F
C616	1-107-826-11	s	CAPACITOR,CHIP CERAMIC 0.1MF
C617	1-164-156-11	s	CAPACITOR,CERAMIC 0.1MF/25V F
C618	1-115-467-11	s	CAPACITOR CERAMIC 0.22MF/10V B
C619	1-115-467-11	s	CAPACITOR CERAMIC 0.22MF/10V B
C620	1-117-681-11	s	CAPACITOR, ELECT 100MF/16V
C621	1-164-156-11	s	CAPACITOR,CERAMIC 0.1MF/25V F
C622	1-164-156-11	s	CAPACITOR,CERAMIC 0.1MF/25V F
C701	1-162-970-11	s	CAPACITOR CERAMIC 0.01MF/25V B
C702	1-107-826-11	s	CAPACITOR,CHIP CERAMIC 0.1MF
C703	1-128-992-11	s	CAPACITOR ELECT 47MF 25V
C704	1-107-826-11	s	CAPACITOR,CHIP CERAMIC 0.1MF
C705	1-107-826-11	s	CAPACITOR,CHIP CERAMIC 0.1MF
C706	1-162-925-11	s	CAPACITOR,CERAMIC 68PF/50V CH
C707	1-164-156-11	s	CAPACITOR,CERAMIC 0.1MF/25V F
C708	1-128-992-11	s	CAPACITOR ELECT 47MF 25V
C710	1-127-760-11	s	CAPACITOR,CERAMIC 4.7MF/6.3V
C711	1-115-467-11	s	CAPACITOR CERAMIC 0.22MF/10V B
C712	1-164-156-11	s	CAPACITOR,CERAMIC 0.1MF/25V F
C713	1-107-826-11	s	CAPACITOR,CHIP CERAMIC 0.1MF
C714	1-107-826-11	s	CAPACITOR,CHIP CERAMIC 0.1MF
C715	1-164-156-11	s	CAPACITOR,CERAMIC 0.1MF/25V F
C716	1-107-826-11	s	CAPACITOR,CHIP CERAMIC 0.1MF
C717	1-164-156-11	s	CAPACITOR,CERAMIC 0.1MF/25V F
C718	1-115-467-11	s	CAPACITOR CERAMIC 0.22MF/10V B
C719	1-115-467-11	s	CAPACITOR CERAMIC 0.22MF/10V B
C720	1-117-681-11	s	CAPACITOR, ELECT 100MF/16V
C721	1-164-156-11	s	CAPACITOR,CERAMIC 0.1MF/25V F
C722	1-164-156-11	s	CAPACITOR,CERAMIC 0.1MF/25V F
CN101	1-695-223-21	o	PIN,CONNECTOR (SMD) 10P
CN102	1-580-756-21	o	PIN, CONNECTOR 7P
CN104	1-580-056-21	o	PIN,CONNECTOR 3P
CN105	1-774-730-21	s	PIN, CONNECTOR (PC BOARD) 3P
CN106	1-580-056-21	o	PIN,CONNECTOR 3P
CN107	1-580-056-21	o	PIN,CONNECTOR 3P
CN108	1-770-622-21	s	PIN, CONNECTOR 5P
CN109	1-778-965-21	s	PIN, CONNECTOR (PC BOARD) 12P
CN110	1-770-629-21	s	PIN, CONNECTOR 12P
CN111	1-779-730-11	s	CONNECTOR, FFC/FPC (ZIF) 24P
CN112	1-770-454-21	o	CONNECTOR, BOARD TO BOARD 70P
CN301	1-779-884-11	s	PLUG, CONNECTOR 4P
CN502	1-779-730-11	s	CONNECTOR, FFC/FPC (ZIF) 24P
CN602	1-779-730-11	s	CONNECTOR, FFC/FPC (ZIF) 24P
CN702	1-779-730-11	s	CONNECTOR, FFC/FPC (ZIF) 24P
D101	8-719-073-11	s	DIODE BZA456A
D102	8-719-073-11	s	DIODE BZA456A
D103	8-719-914-43	s	DIODE DAN202K
D104	8-719-914-43	s	DIODE DAN202K
D201	8-719-024-77	s	DIODE HN1D03FU-TE85L

(C BOARD)

Ref. No. or Q'ty	Part No.	SP	Description
D202	8-719-024-77	s	DIODE HN1D03FU-TE85L
D301	8-719-914-43	s	DIODE DAN202K
D401	8-719-988-61	s	DIODE 1SS355TE-17
FB101	1-500-451-11	s	MICRO INDUCTOR (CHIP) 41P750S
FB102	1-500-451-11	s	MICRO INDUCTOR (CHIP) 41P750S
FB103	1-500-451-11	s	MICRO INDUCTOR (CHIP) 41P750S
FB104	1-500-451-11	s	MICRO INDUCTOR (CHIP) 41P750S
FB105	1-414-921-11	s	INDUCTOR, FERRITE BEAD
FB106	1-414-921-11	s	INDUCTOR, FERRITE BEAD
FB107	1-414-921-11	s	INDUCTOR, FERRITE BEAD
FB108	1-414-921-11	s	INDUCTOR, FERRITE BEAD
FB109	1-414-921-11	s	INDUCTOR, FERRITE BEAD
FB110	1-414-921-11	s	INDUCTOR, FERRITE BEAD
FB111	1-414-921-11	s	INDUCTOR, FERRITE BEAD
FB113	1-414-921-11	s	INDUCTOR, FERRITE BEAD
FB114	1-414-921-11	s	INDUCTOR, FERRITE BEAD
FB115	1-414-921-11	s	INDUCTOR, FERRITE BEAD
FB116	1-414-921-11	s	INDUCTOR, FERRITE BEAD
FB117	1-500-451-11	s	MICRO INDUCTOR (CHIP) 41P750S
FB118	1-500-451-11	s	MICRO INDUCTOR (CHIP) 41P750S
FB119	1-500-451-11	s	MICRO INDUCTOR (CHIP) 41P750S
FB120	1-414-921-11	s	INDUCTOR, FERRITE BEAD
FB121	1-414-921-11	s	INDUCTOR, FERRITE BEAD
FB122	1-414-921-11	s	INDUCTOR, FERRITE BEAD
FB301	1-414-921-11	s	INDUCTOR, FERRITE BEAD
FB302	1-414-921-11	s	INDUCTOR, FERRITE BEAD
FB303	1-414-921-11	s	INDUCTOR, FERRITE BEAD
FB304	1-414-921-11	s	INDUCTOR, FERRITE BEAD
FB401	1-414-921-11	s	INDUCTOR, FERRITE BEAD
FB402	1-414-921-11	s	INDUCTOR, FERRITE BEAD
FB403	1-414-921-11	s	INDUCTOR, FERRITE BEAD
FB501	1-414-921-11	s	INDUCTOR, FERRITE BEAD
FB502	1-414-921-11	s	INDUCTOR, FERRITE BEAD
FB503	1-414-921-11	s	INDUCTOR, FERRITE BEAD
FB505	1-414-921-11	s	INDUCTOR, FERRITE BEAD
FB601	1-414-921-11	s	INDUCTOR, FERRITE BEAD
FB602	1-414-921-11	s	INDUCTOR, FERRITE BEAD
FB603	1-414-921-11	s	INDUCTOR, FERRITE BEAD
FB701	1-414-921-11	s	INDUCTOR, FERRITE BEAD
FB702	1-414-921-11	s	INDUCTOR, FERRITE BEAD
FB703	1-414-921-11	s	INDUCTOR, FERRITE BEAD
IC101	8-759-388-31	s	IC PQ20VZ1U
IC102	8-759-460-81	s	IC BA12FP-E2
IC103	8-759-533-85	s	IC L88M05T-FA-TL
IC104	8-759-533-85	s	IC L88M05T-FA-TL
IC105	8-759-660-98	s	IC NC7SZ02P5
IC106	8-759-472-14	s	IC 74VHC125MTCX
IC107	8-759-388-31	s	IC PQ20VZ1U
IC108	8-759-447-77	s	IC TC7WH74FU (TE12R)
IC109	8-759-485-79	s	IC TC7SET08FU (TE85L)
IC110	8-759-485-79	s	IC TC7SET08FU (TE85L)
IC201	8-759-582-91	s	IC S-80842ANNP-ED6-T2
IC202	8-759-575-16	s	IC LMC7101BIM5X
IC203	8-759-544-01	s	IC S-80828ANNP-EDR-T2
IC204	8-759-659-65	s	IC LP2985IM5X-3.3
IC205	8-759-648-10	s	IC HD64F2633TE
IC301	8-759-472-14	s	IC 74VHC125MTCX
IC302	8-759-824-29	s	IC CXD9607GB

(C BOARD)

Ref. No. or Q'ty	Part No.	SP	Description
IC303	8-759-544-01	s	IC S-80828ANNP-EDR-T2
IC304	8-759-447-77	s	IC TC7WH74FU (TE12R)
IC305	8-759-684-72	s	IC M24C64-WMN6T(A)
IC306	8-759-082-57	s	IC TC7W04FU
IC307	8-759-683-83	s	IC 74VHCT541AMTCX
IC308	8-759-683-83	s	IC 74VHCT541AMTCX
IC309	8-759-683-83	s	IC 74VHCT541AMTCX
IC310	8-759-449-58	s	IC LM7131BCM5X
IC401	8-759-542-46	s	IC M62392FP
IC402	8-759-571-03	s	IC LM4041DIM3-1.2(T&R)
IC403	8-759-584-86	s	IC M52749FP-TP
IC404	8-759-645-13	s	IC ADV7123KST140
IC501	8-752-093-18	s	IC CXA3512R-T6
IC503	8-759-252-41	s	IC TK11900MTL
IC601	8-752-093-18	s	IC CXA3512R-T6
IC701	8-752-093-18	s	IC CXA3512R-T6
L301	1-469-525-91	s	INDUCTOR 10UH (NLFV25)
L401	1-469-525-91	s	INDUCTOR 10UH (NLFV25)
L402	1-469-525-91	s	INDUCTOR 10UH (NLFV25)
L403	1-469-525-91	s	INDUCTOR 10UH (NLFV25)
L404	1-469-525-91	s	INDUCTOR 10UH (NLFV25)
L405	1-469-525-91	s	INDUCTOR 10UH (NLFV25)
L501	1-410-369-11	s	INDUCTOR,CHIP 1UH (3225)
L502	1-410-369-11	s	INDUCTOR,CHIP 1UH (3225)
L601	1-410-369-11	s	INDUCTOR,CHIP 1UH (3225)
L602	1-410-369-11	s	INDUCTOR,CHIP 1UH (3225)
L701	1-410-369-11	s	INDUCTOR,CHIP 1UH (3225)
L702	1-410-369-11	s	INDUCTOR,CHIP 1UH (3225)
Q101	8-729-230-49	s	TRANSISTOR 2SC2712-YG
Q102	8-729-230-49	s	TRANSISTOR 2SC2712-YG
Q103	8-729-230-49	s	TRANSISTOR 2SC2712-YG
Q301	8-729-230-49	s	TRANSISTOR 2SC2712-YG
Q302	8-729-026-49	s	TRANSISTOR 2SA1037AK-T146-R
Q303	8-729-202-38	s	TRANSISTOR 2SC3326N-A
Q304	8-729-202-38	s	TRANSISTOR 2SC3326N-A
Q401	8-729-112-65	s	TRANSISTOR 2SA1462
Q402	8-729-112-65	s	TRANSISTOR 2SA1462
Q403	8-729-112-65	s	TRANSISTOR 2SA1462
Q404	8-729-112-65	s	TRANSISTOR 2SA1462
Q501	8-729-013-28	s	TRANSISTOR HN1B01FU-TE85R
Q502	8-729-013-28	s	TRANSISTOR HN1B01FU-TE85R
Q601	8-729-013-28	s	TRANSISTOR HN1B01FU-TE85R
Q602	8-729-013-28	s	TRANSISTOR HN1B01FU-TE85R
Q701	8-729-013-28	s	TRANSISTOR HN1B01FU-TE85R
Q702	8-729-013-28	s	TRANSISTOR HN1B01FU-TE85R
R101	1-218-716-11	s	RESISTOR,CHIP 10K 1/16W(1608)
R102	1-218-716-11	s	RESISTOR,CHIP 10K 1/16W(1608)
R103	1-216-809-11	s	RESISTOR,CHIP 100 1/16W 1608
R104	1-216-809-11	s	RESISTOR,CHIP 100 1/16W 1608
R105	1-218-724-11	s	RESISTOR,CHIP 22K 1/16W(1608)
R106	1-218-706-11	s	RESISTOR,CHIP 3.9K 1/16W(1608)
R107	1-218-706-11	s	RESISTOR,CHIP 3.9K 1/16W(1608)
R108	1-218-716-11	s	RESISTOR,CHIP 10K 1/16W(1608)
R109	1-216-833-11	s	RESISTOR,CHIP 10K 1/16W (1608)
R110	1-216-829-11	s	RESISTOR,CHIP 4.7K 1/16W(1608)
R111	1-216-844-11	s	RESISTOR,CHIP 82K 1/16W 1608
R112	1-216-833-11	s	RESISTOR,CHIP 10K 1/16W (1608)

(C BOARD)

Ref. No. or Q'ty	Part No.	SP	Description
R113	1-216-841-11	s	RESISTOR, CHIP 47K 1/16W 1608
R114	1-218-723-11	s	RESISTOR,CHIP 20K 1/16W(1608)
R115	1-218-714-11	s	RESISTOR,CHIP 8.2K 1/16W(1608)
R116	1-218-685-11	s	RESISTOR,CHIP 510 1/16W
R117	1-216-841-11	s	RESISTOR, CHIP 47K 1/16W 1608
R118	1-216-837-11	s	RESISTOR,CHIP 22K 1/16W 1608
R119	1-216-837-11	s	RESISTOR,CHIP 22K 1/16W 1608
R120	1-216-837-11	s	RESISTOR,CHIP 22K 1/16W 1608
R121	1-216-041-00	s	RESISTOR, CHIP 470 1/10W(2012)
R122	1-216-809-11	s	RESISTOR,CHIP 100 1/16W 1608
R123	1-218-692-11	s	RESISTOR,CHIP 1.0K 1/16W(1608)
R125	1-216-833-11	s	RESISTOR,CHIP 10K 1/16W (1608)
R126	1-218-692-11	s	RESISTOR,CHIP 1.0K 1/16W(1608)
R127	1-216-809-11	s	RESISTOR,CHIP 100 1/16W 1608
R128	1-216-815-11	s	RESISTOR,CHIP 330 1/16W 1608
R129	1-216-815-11	s	RESISTOR,CHIP 330 1/16W 1608
R130	1-216-815-11	s	RESISTOR,CHIP 330 1/16W 1608
R131	1-216-815-11	s	RESISTOR,CHIP 330 1/16W 1608
R132	1-216-833-11	s	RESISTOR,CHIP 10K 1/16W (1608)
R133	1-216-809-11	s	RESISTOR,CHIP 100 1/16W 1608
R134	1-216-809-11	s	RESISTOR,CHIP 100 1/16W 1608
R135	1-216-809-11	s	RESISTOR,CHIP 100 1/16W 1608
R136	1-216-805-11	s	RESISTOR,CHIP 47 1/16W 1608
R137	1-216-805-11	s	RESISTOR,CHIP 47 1/16W 1608
R138	1-216-805-11	s	RESISTOR,CHIP 47 1/16W 1608
R140	1-216-805-11	s	RESISTOR,CHIP 47 1/16W 1608
R142	1-216-864-11	s	CONDUCTOR, CHIP (1608)
R143	1-216-864-11	s	CONDUCTOR, CHIP (1608)
R144	1-216-041-00	s	RESISTOR, CHIP 470 1/10W(2012)
R146	1-216-833-11	s	RESISTOR,CHIP 10K 1/16W (1608)
R201	1-216-833-11	s	RESISTOR,CHIP 10K 1/16W (1608)
R202	1-216-839-11	s	RESISTOR,CHIP 33K 1/16W 1608
R203	1-218-734-11	s	RESISTOR,CHIP 56K 1/16W(1608)
R204	1-216-833-11	s	RESISTOR,CHIP 10K 1/16W (1608)
R205	1-218-726-11	s	RESISTOR CHIP 27K 1/16W (1608)
R206	1-216-839-11	s	RESISTOR,CHIP 33K 1/16W 1608
R207	1-216-809-11	s	RESISTOR,CHIP 100 1/16W 1608
R208	1-216-841-11	s	RESISTOR, CHIP 47K 1/16W 1608
R210	1-216-833-11	s	RESISTOR,CHIP 10K 1/16W (1608)
R212	1-216-833-11	s	RESISTOR,CHIP 10K 1/16W (1608)
R214	1-216-833-11	s	RESISTOR,CHIP 10K 1/16W (1608)
R215	1-216-825-11	s	RESISTOR,CHIP 2.2K 1/16W 1608
R216	1-216-825-11	s	RESISTOR,CHIP 2.2K 1/16W 1608
R217	1-216-833-11	s	RESISTOR,CHIP 10K 1/16W (1608)
R218	1-216-833-11	s	RESISTOR,CHIP 10K 1/16W (1608)
R219	1-216-833-11	s	RESISTOR,CHIP 10K 1/16W (1608)
R220	1-216-833-11	s	RESISTOR,CHIP 10K 1/16W (1608)
R221	1-216-833-11	s	RESISTOR,CHIP 10K 1/16W (1608)
R222	1-216-821-11	s	RESISTOR,CHIP 1.0K 1/16W(1608)
R223	1-216-825-11	s	RESISTOR,CHIP 2.2K 1/16W 1608
R224	1-216-825-11	s	RESISTOR,CHIP 2.2K 1/16W 1608
R225	1-216-833-11	s	RESISTOR,CHIP 10K 1/16W (1608)
R226	1-216-833-11	s	RESISTOR,CHIP 10K 1/16W (1608)
R227	1-216-797-11	s	RESISTOR,CHIP 10 1/16W 1608
R228	1-218-703-11	s	RESISTOR,CHIP 3.0K 1/16(1608)
R229	1-218-675-11	s	RESISTOR,CHIP 200 1/16W (1608)
R230	1-216-809-11	s	RESISTOR,CHIP 100 1/16W 1608
R231	1-216-833-11	s	RESISTOR,CHIP 10K 1/16W (1608)
R232	1-216-833-11	s	RESISTOR,CHIP 10K 1/16W (1608)

(C BOARD)

Ref. No. or Q'ty	Part No.	SP	Description
R233	1-216-809-11	s	RESISTOR,CHIP 100 1/16W 1608
R234	1-216-809-11	s	RESISTOR,CHIP 100 1/16W 1608
R236	1-216-825-11	s	RESISTOR,CHIP 2.2K 1/16W 1608
R237	1-216-825-11	s	RESISTOR,CHIP 2.2K 1/16W 1608
R238	1-216-833-11	s	RESISTOR,CHIP 10K 1/16W (1608)
R239	1-216-826-11	s	RESISTOR,CHIP 2.7K 1/16W(1608)
R240	1-216-833-11	s	RESISTOR,CHIP 10K 1/16W (1608)
R241	1-216-833-11	s	RESISTOR,CHIP 10K 1/16W (1608)
R242	1-216-833-11	s	RESISTOR,CHIP 10K 1/16W (1608)
R301	1-216-833-11	s	RESISTOR,CHIP 10K 1/16W (1608)
R302	1-216-833-11	s	RESISTOR,CHIP 10K 1/16W (1608)
R303	1-216-839-11	s	RESISTOR,CHIP 33K 1/16W 1608
R304	1-216-833-11	s	RESISTOR,CHIP 10K 1/16W (1608)
R305	1-216-809-11	s	RESISTOR,CHIP 100 1/16W 1608
R306	1-216-809-11	s	RESISTOR,CHIP 100 1/16W 1608
R307	1-216-809-11	s	RESISTOR,CHIP 100 1/16W 1608
R308	1-216-809-11	s	RESISTOR,CHIP 100 1/16W 1608
R309	1-216-809-11	s	RESISTOR,CHIP 100 1/16W 1608
R310	1-216-809-11	s	RESISTOR,CHIP 100 1/16W 1608
R311	1-216-841-11	s	RESISTOR, CHIP 47K 1/16W 1608
R312	1-216-833-11	s	RESISTOR,CHIP 10K 1/16W (1608)
R313	1-216-821-11	s	RESISTOR,CHIP 1.0K 1/16W(1608)
R314	1-216-833-11	s	RESISTOR,CHIP 10K 1/16W (1608)
R315	1-216-864-11	s	CONDUCTOR, CHIP (1608)
R316	1-216-864-11	s	CONDUCTOR, CHIP (1608)
R318	1-216-833-11	s	RESISTOR,CHIP 10K 1/16W (1608)
R319	1-216-833-11	s	RESISTOR,CHIP 10K 1/16W (1608)
R320	1-216-864-11	s	CONDUCTOR, CHIP (1608)
R321	1-216-864-11	s	CONDUCTOR, CHIP (1608)
R322	1-216-805-11	s	RESISTOR,CHIP 47 1/16W 1608
R323	1-216-805-11	s	RESISTOR,CHIP 47 1/16W 1608
R324	1-216-805-11	s	RESISTOR,CHIP 47 1/16W 1608
R325	1-216-805-11	s	RESISTOR,CHIP 47 1/16W 1608
R326	1-216-805-11	s	RESISTOR,CHIP 47 1/16W 1608
R327	1-216-805-11	s	RESISTOR,CHIP 47 1/16W 1608
R328	1-216-829-11	s	RESISTOR,CHIP 4.7K 1/16W(1608)
R329	1-216-829-11	s	RESISTOR,CHIP 4.7K 1/16W(1608)
R330	1-216-825-11	s	RESISTOR,CHIP 2.2K 1/16W 1608
R331	1-216-825-11	s	RESISTOR,CHIP 2.2K 1/16W 1608
R332	1-216-805-11	s	RESISTOR,CHIP 47 1/16W 1608
R333	1-216-805-11	s	RESISTOR,CHIP 47 1/16W 1608
R334	1-216-845-11	s	RESISTOR,CHIP 100K 1/16W(1608)
R335	1-216-845-11	s	RESISTOR,CHIP 100K 1/16W(1608)
R337	1-216-805-11	s	RESISTOR,CHIP 47 1/16W 1608
R338	1-216-864-11	s	CONDUCTOR, CHIP (1608)
R339	1-216-817-11	s	RESISTOR,CHIP 470 1/16W 1608
R340	1-216-805-11	s	RESISTOR,CHIP 47 1/16W 1608
R341	1-216-814-11	s	RESISTOR,CHIP 270 1/16W 1608
R342	1-216-864-11	s	CONDUCTOR, CHIP (1608)
R401	1-218-716-11	s	RESISTOR,CHIP 10K 1/16W(1608)
R402	1-218-710-11	s	RESISTOR,CHIP 5.6K 1/16W(1608)
R403	1-216-809-11	s	RESISTOR,CHIP 100 1/16W 1608
R404	1-216-809-11	s	RESISTOR,CHIP 100 1/16W 1608
R405	1-216-805-11	s	RESISTOR,CHIP 47 1/16W 1608
R406	1-216-805-11	s	RESISTOR,CHIP 47 1/16W 1608
R407	1-216-805-11	s	RESISTOR,CHIP 47 1/16W 1608
R408	1-216-805-11	s	RESISTOR,CHIP 47 1/16W 1608
R409	1-216-805-11	s	RESISTOR,CHIP 47 1/16W 1608
R410	1-216-827-11	s	RESISTOR, CHIP 3.3K 1/16W 1608

(C BOARD)

Ref. No. or Q'ty	Part No.	SP	Description
R411	1-216-809-11	s	RESISTOR,CHIP 100 1/16W 1608
R412	1-218-688-11	s	RESISTOR,CHIP 680 1/16W(1608)
R413	1-216-057-00	s	RESISTOR CHIP 2.2K 1/10W(2012)
R414	1-216-057-00	s	RESISTOR CHIP 2.2K 1/10W(2012)
R415	1-216-808-11	s	RESISTOR,CHIP 82 1/16W 1608
R416	1-218-665-11	s	RESISTOR,CHIP 75 1/16W (1608)
R417	1-216-819-11	s	RESISTOR,CHIP 680 1/16W 1608
R418	1-216-797-11	s	RESISTOR,CHIP 10 1/16W 1608
R419	1-216-816-11	s	RESISTOR, CHIP 390 1/16W 1608
R420	1-216-057-00	s	RESISTOR CHIP 2.2K 1/10W(2012)
R421	1-216-057-00	s	RESISTOR CHIP 2.2K 1/10W(2012)
R423	1-216-819-11	s	RESISTOR,CHIP 680 1/16W 1608
R424	1-216-797-11	s	RESISTOR,CHIP 10 1/16W 1608
R425	1-218-665-11	s	RESISTOR,CHIP 75 1/16W (1608)
R426	1-216-808-11	s	RESISTOR,CHIP 82 1/16W 1608
R428	1-216-853-11	s	RESISTOR,CHIP 470K 1/16W(1608)
R429	1-216-816-11	s	RESISTOR, CHIP 390 1/16W 1608
R430	1-216-797-11	s	RESISTOR,CHIP 10 1/16W 1608
R431	1-216-833-11	s	RESISTOR,CHIP 10K 1/16W (1608)
R433	1-218-665-11	s	RESISTOR,CHIP 75 1/16W (1608)
R434	1-216-057-00	s	RESISTOR CHIP 2.2K 1/10W(2012)
R435	1-216-057-00	s	RESISTOR CHIP 2.2K 1/10W(2012)
R436	1-216-841-11	s	RESISTOR, CHIP 47K 1/16W 1608
R437	1-216-819-11	s	RESISTOR,CHIP 680 1/16W 1608
R438	1-216-808-11	s	RESISTOR,CHIP 82 1/16W 1608
R439	1-216-809-11	s	RESISTOR,CHIP 100 1/16W 1608
R440	1-216-816-11	s	RESISTOR, CHIP 390 1/16W 1608
R441	1-216-809-11	s	RESISTOR,CHIP 100 1/16W 1608
R442	1-216-809-11	s	RESISTOR,CHIP 100 1/16W 1608
R502	1-218-699-11	s	RESISTOR,CHIP 2.0K 1/16W(1608)
R503	1-218-706-11	s	RESISTOR,CHIP 3.9K 1/16W(1608)
R504	1-218-706-11	s	RESISTOR,CHIP 3.9K 1/16W(1608)
R505	1-218-699-11	s	RESISTOR,CHIP 2.0K 1/16W(1608)
R506	1-216-805-11	s	RESISTOR,CHIP 47 1/16W 1608
R507	1-216-864-11	s	CONDUCTOR, CHIP (1608)
R508	1-216-864-11	s	CONDUCTOR, CHIP (1608)
R509	1-216-864-11	s	CONDUCTOR, CHIP (1608)
R510	1-216-864-11	s	CONDUCTOR, CHIP (1608)
R511	1-218-720-11	s	RESISTOR,CHIP 15K 1/16W(1608)
R512	1-218-744-11	s	RESISTOR,CHIP 150K 1/16W
R513	1-216-864-11	s	CONDUCTOR, CHIP (1608)
R514	1-216-864-11	s	CONDUCTOR, CHIP (1608)
R516	1-216-864-11	s	CONDUCTOR, CHIP (1608)
R518	1-216-864-11	s	CONDUCTOR, CHIP (1608)
R519	1-216-809-11	s	RESISTOR,CHIP 100 1/16W 1608
R522	1-216-833-11	s	RESISTOR,CHIP 10K 1/16W (1608)
R523	1-216-825-11	s	RESISTOR,CHIP 2.2K 1/16W 1608
R524	1-216-809-11	s	RESISTOR,CHIP 100 1/16W 1608
R525	1-216-789-11	s	RESISTOR,CHIP 2.2 1/16W(1608)
R526	1-216-864-11	s	CONDUCTOR, CHIP (1608)
R527	1-216-789-11	s	RESISTOR,CHIP 2.2 1/16W(1608)
R528	1-216-825-11	s	RESISTOR,CHIP 2.2K 1/16W 1608
R602	1-218-699-11	s	RESISTOR,CHIP 2.0K 1/16W(1608)
R603	1-218-706-11	s	RESISTOR,CHIP 3.9K 1/16W(1608)
R604	1-218-706-11	s	RESISTOR,CHIP 3.9K 1/16W(1608)
R605	1-218-699-11	s	RESISTOR,CHIP 2.0K 1/16W(1608)
R606	1-216-805-11	s	RESISTOR,CHIP 47 1/16W 1608
R607	1-216-864-11	s	CONDUCTOR, CHIP (1608)
R608	1-216-864-11	s	CONDUCTOR, CHIP (1608)

(C BOARD)

Ref. No. or Q'ty	Part No.	SP	Description
R609	1-216-864-11	s	CONDUCTOR, CHIP (1608)
R610	1-216-864-11	s	CONDUCTOR, CHIP (1608)
R611	1-216-864-11	s	CONDUCTOR, CHIP (1608)
R612	1-216-864-11	s	CONDUCTOR, CHIP (1608)
R614	1-216-864-11	s	CONDUCTOR, CHIP (1608)
R616	1-216-864-11	s	CONDUCTOR, CHIP (1608)
R617	1-216-809-11	s	RESISTOR,CHIP 100 1/16W 1608
R620	1-216-833-11	s	RESISTOR,CHIP 10K 1/16W (1608)
R621	1-216-825-11	s	RESISTOR,CHIP 2.2K 1/16W 1608
R622	1-216-809-11	s	RESISTOR,CHIP 100 1/16W 1608
R623	1-216-789-11	s	RESISTOR,CHIP 2.2 1/16W(1608)
R624	1-216-864-11	s	CONDUCTOR, CHIP (1608)
R625	1-216-789-11	s	RESISTOR,CHIP 2.2 1/16W(1608)
R626	1-216-825-11	s	RESISTOR,CHIP 2.2K 1/16W 1608
R702	1-218-699-11	s	RESISTOR,CHIP 2.0K 1/16W(1608)
R703	1-218-706-11	s	RESISTOR,CHIP 3.9K 1/16W(1608)
R704	1-218-706-11	s	RESISTOR,CHIP 3.9K 1/16W(1608)
R705	1-218-699-11	s	RESISTOR,CHIP 2.0K 1/16W(1608)
R706	1-216-805-11	s	RESISTOR,CHIP 47 1/16W 1608
R707	1-216-864-11	s	CONDUCTOR, CHIP (1608)
R708	1-216-864-11	s	CONDUCTOR, CHIP (1608)
R709	1-216-864-11	s	CONDUCTOR, CHIP (1608)
R710	1-216-864-11	s	CONDUCTOR, CHIP (1608)
R711	1-216-864-11	s	CONDUCTOR, CHIP (1608)
R712	1-216-864-11	s	CONDUCTOR, CHIP (1608)
R714	1-216-864-11	s	CONDUCTOR, CHIP (1608)
R716	1-216-864-11	s	CONDUCTOR, CHIP (1608)
R717	1-216-809-11	s	RESISTOR,CHIP 100 1/16W 1608
R720	1-216-833-11	s	RESISTOR,CHIP 10K 1/16W (1608)
R721	1-216-825-11	s	RESISTOR,CHIP 2.2K 1/16W 1608
R722	1-216-809-11	s	RESISTOR,CHIP 100 1/16W 1608
R723	1-216-789-11	s	RESISTOR,CHIP 2.2 1/16W(1608)
R724	1-216-864-11	s	CONDUCTOR, CHIP (1608)
R725	1-216-789-11	s	RESISTOR,CHIP 2.2 1/16W(1608)
R726	1-216-825-11	s	RESISTOR,CHIP 2.2K 1/16W 1608
RB101	1-233-576-11	s	RESISTOR,CHIP NETWORK 100
RB102	1-233-576-11	s	RESISTOR,CHIP NETWORK 100
RB103	1-233-576-11	s	RESISTOR,CHIP NETWORK 100
RB201	1-233-412-11	s	RESISTOR,CHIP NETWORK 1K
RB202	1-233-576-11	s	RESISTOR,CHIP NETWORK 100
RB203	1-233-576-11	s	RESISTOR,CHIP NETWORK 100
RB204	1-236-908-11	s	RESISTOR,NETWORK 10K (3216)
RB205	1-233-576-11	s	RESISTOR,CHIP NETWORK 100
RB206	1-233-576-11	s	RESISTOR,CHIP NETWORK 100
RB207	1-233-576-11	s	RESISTOR,CHIP NETWORK 100
RB208	1-233-576-11	s	RESISTOR,CHIP NETWORK 100
RB209	1-233-576-11	s	RESISTOR,CHIP NETWORK 100
RB210	1-233-576-11	s	RESISTOR,CHIP NETWORK 100
RB211	1-233-576-11	s	RESISTOR,CHIP NETWORK 100
RB212	1-233-576-11	s	RESISTOR,CHIP NETWORK 100
RB213	1-233-576-11	s	RESISTOR,CHIP NETWORK 100
RB301	1-233-576-11	s	RESISTOR,CHIP NETWORK 100
RB302	1-233-576-11	s	RESISTOR,CHIP NETWORK 100
RB303	1-233-576-11	s	RESISTOR,CHIP NETWORK 100
RB304	1-233-576-11	s	RESISTOR,CHIP NETWORK 100
RB305	1-233-576-11	s	RESISTOR,CHIP NETWORK 100
RB306	1-233-576-11	s	RESISTOR,CHIP NETWORK 100
RB307	1-233-575-11	s	RES, CHIP NETWORK 22
RB309	1-233-388-11	s	FILTER, BAND PASS

(C BOARD)

Ref. No. or Q'ty	Part No.	SP	Description
RB310	1-233-388-11	s	FILTER, BAND PASS
RB311	1-233-575-11	s	RES, CHIP NETWORK 22
RB312	1-233-575-11	s	RES, CHIP NETWORK 22
RB402	1-233-576-11	s	RESISTOR,CHIP NETWORK 100
RB403	1-233-576-11	s	RESISTOR,CHIP NETWORK 100
S301	1-771-337-21	s	SWITCH, SLIDE
TH101	1-808-656-11	s	THERMISTOR
TP101	1-535-757-11	s	CHIP, CHECKER (CONNECTOR)
TP102	1-535-757-11	s	CHIP, CHECKER (CONNECTOR)
TP103	1-535-757-11	s	CHIP, CHECKER (CONNECTOR)
TP104	1-535-757-11	s	CHIP, CHECKER (CONNECTOR)
TP105	1-535-757-11	s	CHIP, CHECKER (CONNECTOR)
TP106	1-535-757-11	s	CHIP, CHECKER (CONNECTOR)
TP107	1-535-757-11	s	CHIP, CHECKER (CONNECTOR)
TP108	1-535-757-11	s	CHIP, CHECKER (CONNECTOR)
TP109	1-535-757-11	s	CHIP, CHECKER (CONNECTOR)
TP110	1-535-757-11	s	CHIP, CHECKER (CONNECTOR)
TP111	1-535-757-11	s	CHIP, CHECKER (CONNECTOR)
TP112	1-535-757-11	s	CHIP, CHECKER (CONNECTOR)
TP201	1-535-757-11	s	CHIP, CHECKER (CONNECTOR)
TP202	1-535-757-11	s	CHIP, CHECKER (CONNECTOR)
TP301	1-535-757-11	s	CHIP, CHECKER (CONNECTOR)
TP302	1-535-757-11	s	CHIP, CHECKER (CONNECTOR)
TP303	1-535-757-11	s	CHIP, CHECKER (CONNECTOR)
TP304	1-535-757-11	s	CHIP, CHECKER (CONNECTOR)
TP305	1-535-757-11	s	CHIP, CHECKER (CONNECTOR)
TP306	1-535-757-11	s	CHIP, CHECKER (CONNECTOR)
TP307	1-535-757-11	s	CHIP, CHECKER (CONNECTOR)
TP308	1-535-757-11	s	CHIP, CHECKER (CONNECTOR)
TP309	1-535-757-11	s	CHIP, CHECKER (CONNECTOR)
TP310	1-535-757-11	s	CHIP, CHECKER (CONNECTOR)
TP311	1-535-757-11	s	CHIP, CHECKER (CONNECTOR)
TP312	1-535-757-11	s	CHIP, CHECKER (CONNECTOR)
TP313	1-535-757-11	s	CHIP, CHECKER (CONNECTOR)
TP401	1-535-757-11	s	CHIP, CHECKER (CONNECTOR)
TP402	1-535-757-11	s	CHIP, CHECKER (CONNECTOR)
TP403	1-535-757-11	s	CHIP, CHECKER (CONNECTOR)
TP404	1-535-757-11	s	CHIP, CHECKER (CONNECTOR)
TP502	1-535-757-11	s	CHIP, CHECKER (CONNECTOR)
TP503	1-535-757-11	s	CHIP, CHECKER (CONNECTOR)
TP504	1-535-757-11	s	CHIP, CHECKER (CONNECTOR)
TP505	1-535-757-11	s	CHIP, CHECKER (CONNECTOR)
TP602	1-535-757-11	s	CHIP, CHECKER (CONNECTOR)
TP603	1-535-757-11	s	CHIP, CHECKER (CONNECTOR)
TP604	1-535-757-11	s	CHIP, CHECKER (CONNECTOR)
TP702	1-535-757-11	s	CHIP, CHECKER (CONNECTOR)
TP703	1-535-757-11	s	CHIP, CHECKER (CONNECTOR)
TP704	1-535-757-11	s	CHIP, CHECKER (CONNECTOR)
X201	1-781-659-11	s	VIBRATOR, CRYSTAL

F BOARD

Ref. No. or Q'ty	Part No.	SP	Description
1pc	A-1245-606-A	s	MOUNTED CIRCUIT BOARD, F
C1101 ⚠	1-113-900-11	s	CAPACITOR,CERAMIC 470PF/250V
C1103 ⚠	1-115-166-11	s	CAPACITOR,FILM 0.22MF/250VAC
C1106 ⚠	1-113-900-11	s	CAPACITOR,CERAMIC 470PF/250V
CN1101	1-793-305-11	s	INLET, AC (AC-M11PB52)
CN1102	1-691-960-11	o	PIN,CONNECTOR (PC BOARD) 3P
F1101 ⚠	1-576-233-11	s	FUSE (H.B.C.) 6.3A/250V
FH1101	1-533-223-11	s	CLIP,FUSE
FH1102	1-533-223-11	s	CLIP,FUSE
L1101 ⚠	1-424-968-11	s	COIL, LINE FILTER
R1101 ⚠	1-202-847-00	s	RESISTOR,SOLID 560K 1/2W
VD1101 ⚠	1-801-268-11	s	VARISTOR (TNR14V471K660)

G BOARD

Ref. No. or Q'ty	Part No.	SP	Description
1pc	A-1316-582-A	s	MOUNTED CIRCUIT BOARD, G
1pc	7-682-949-01	s	SCREW +PSW 3X10
C2004 ⚠	1-104-708-11	s	CAP, FILM 0.47MF/250VAC
C2101	1-117-227-11	s	CAPACITOR,PE FILM 1.0MF/450V
C2102	1-117-751-11	s	CAPACITOR, ELECT 220MF/450V
C2103 ⚠	1-137-477-11	s	CAPCITOR,FILM 0.47MF/400V
C2104	1-107-909-11	s	CAPACITOR,ELECT 47MF/50V
C2105	1-115-339-11	s	CAPACITOR,CERAMIC 0.1MF/50V
C2106	1-115-340-11	s	CAPACITOR CERAMIC 0.22MF/25V B
C2107	1-163-251-11	s	CAPACITOR CERAMIC 100PF/50V
C3107	1-163-021-91	s	CAPACITOR, CERAMIC 0.01MF/50V
C3108	1-136-479-11	s	CAPACITOR FILM 0.001MF/100V PP
C3109	1-163-021-91	s	CAPACITOR, CERAMIC 0.01MF/50V
C3110	1-124-779-00	s	CAPACITOR,ELECT 10MF/16V
C3111	1-109-994-11	s	CAPACITOR,CHIP CERAMIC 2.2MF B
C3112	1-126-967-11	s	CAPACITOR,ELECT 47MF/50V
C3113	1-130-495-00	s	CAPACITOR FILM 0.1MF/50V PETP
C3114	1-128-551-11	s	CAPACITOR ERECT 22MF/63V
C3119	1-137-725-21	s	CAP METALIZED PP FILM 8200PF
C3120	1-115-566-11	s	CAPACITOR,CERAMIC 4.7MF B/6.3V
C3121	1-107-911-11	s	CAPACITOR,ELECT 220MF/50V
C3122	1-164-004-11	s	CAPACITOR,CERAMIC 0.1MF/25V
C3123	1-115-789-11	s	CAPACITOR ELECT 1000MF/25V 105
C3124	1-115-789-11	s	CAPACITOR ELECT 1000MF/25V 105
C3125	1-128-946-11	s	CAP, ELECT 2200MF / 10V
C3126	1-115-339-11	s	CAPACITOR,CERAMIC 0.1MF/50V
C3128	1-115-339-11	s	CAPACITOR,CERAMIC 0.1MF/50V
C3130	1-113-900-11	s	CAPACITOR,CERAMIC 470PF/250V
C3131	1-164-004-11	s	CAPACITOR,CERAMIC 0.1MF/25V
C3203	1-126-205-11	s	CAPACITOR,ELECT 47M/6.3
C3204	1-131-999-11	s	CAPACITOR,SOLID ELECT 150MF
C3205	1-163-263-11	s	CAPACITOR CERAMIC 330PF/50V
C3206	1-163-259-91	s	CAPACITOR,CHIP CERAMIC 220PF
C3207	1-164-004-11	s	CAPACITOR,CERAMIC 0.1MF/25V
C3209	1-109-982-11	s	CAPACITOR,CHIP CERAMIC 1MF/10V
C3210	1-117-808-91	s	CAPACITOR,CERAMIC 10MF/10V(B)
C3211	1-135-960-91	s	CAP, CHIP CERAMIC 10MF B(3225)
C3212	1-135-346-11	s	CAP, SOLID ELECT 39MF 16V
C3213	1-164-004-11	s	CAPACITOR,CERAMIC 0.1MF/25V
C3214	1-163-251-11	s	CAPACITOR CERAMIC 100PF/50V
C3318	1-164-004-11	s	CAPACITOR,CERAMIC 0.1MF/25V
C3328	1-126-205-11	s	CAPACITOR,ELECT 47M/6.3
C3330	1-107-823-11	s	CAPACITOR,CERAMIC 0.47MF/16V
CN2001	1-691-960-11	o	PIN,CONNECTOR (PC BOARD) 3P
CN3204	1-580-689-11	o	PIN,CONNECTOR (PC BOARD)
CN3205	1-764-101-11	s	PIN, CONNECTOR (PC BOARD) 2P
CN3301	1-564-515-11	o	PLUG,CONNECTOR (12P)
CN3302	1-564-510-11	o	PLUG,CONNECTOR (7P)
CN3303	1-764-333-11	o	PIN, CONNECTOR (10P)(V TYPE)
D2101	8-719-304-63	s	DIODE RM11C (RECTI)
D2102 ⚠	8-719-066-75	s	DIODE D6SB80
D2103 ⚠	8-719-055-30	s	DIODE D1FS4A-TA
D2104	8-719-055-30	s	DIODE D1FS4A-TA
D2105	8-719-106-98	s	DIODE RD16M-B2
D3103	8-719-107-13	s	DIODE RD18M-B1
D3104	8-719-055-30	s	DIODE D1FS4A-TA
D3107	8-719-979-64	s	DIODE UF4005PKG23

(G BOARD)

Ref. No. or Q'ty	Part No.	SP	Description
D3108	8-719-118-12	s	DIODE RD33M-B
D3109	8-719-057-85	s	DIODE D2FS4-TA
D3110	8-719-510-09	s	DIODE D10SC6M (RECTI)
D3111	8-719-510-09	s	DIODE D10SC6M (RECTI)
D3112	8-719-510-12	s	DIODE D10SC4M
D3113	8-719-106-16	s	DIODE RD6.8M-B1
D3116	8-719-073-01	s	DIODE MA111-(K8).S0
D3117	8-719-073-01	s	DIODE MA111-(K8).S0
D3118	8-719-073-01	s	DIODE MA111-(K8).S0
D3119	8-719-073-01	s	DIODE MA111-(K8).S0
D3120	8-719-073-01	s	DIODE MA111-(K8).S0
D3121	8-719-073-01	s	DIODE MA111-(K8).S0
D3201	8-719-078-04	s	DIODE EC31QS03L-TE12L
D3202	8-719-058-24	s	DIODE RB501V-40TE17
D3203	8-719-078-04	s	DIODE EC31QS03L-TE12L
FB3101	1-500-451-11	s	MICRO INDUCTOR (CHIP) 41P750S
FB3102	1-500-451-11	s	MICRO INDUCTOR (CHIP) 41P750S
IC2101	8-749-015-27	s	IC MZ1540
IC3100	8-759-670-30	s	IC MCZ3001D
IC3102	8-759-388-23	s	IC TL431BCDR2
IC3201	6-701-013-01	s	IC LT1767EMS8#TR
IC3202	8-759-713-98	s	IC LTC1772CS6
IC3304	8-759-533-85	s	IC L88M05T-FA-TL
IC3307	8-759-066-55	s	IC TA75W393FU
L2002 ⚠	1-424-822-11	s	COIL, LINE FILTER
L2101	1-424-820-11	s	COIL, CHOKE
L3204	1-406-977-21	s	COIL, CHOKE 100UH
L3205	1-424-674-11	s	COIL, CHOKE 22UH
L3206	1-424-673-11	s	COIL, CHOKE 4.7UH
PH3100	8-749-010-64	s	PHOTO COUPLER PC123F2
PH3101	8-749-010-64	s	PHOTO COUPLER PC123F2
PH3102	8-749-010-64	s	PHOTO COUPLER PC123F2
Q2101	8-729-101-07	s	TRANSISTOR 2SB798
Q3102	8-729-052-29	s	TRANSISTOR 2SK2876-01MR-F122
Q3103	8-729-052-29	s	TRANSISTOR 2SK2876-01MR-F122
Q3104	8-729-216-22	s	TRANSISTOR 2SA1162-G
Q3105	8-729-230-49	s	TRANSISTOR 2SC2712-YG
Q3106	8-729-230-49	s	TRANSISTOR 2SC2712-YG
Q3107	8-729-048-69	s	TRANSISTOR 2SJ530S-TL
Q3108	8-729-048-69	s	TRANSISTOR 2SJ530S-TL
Q3109	8-729-048-69	s	TRANSISTOR 2SJ530S-TL
Q3110	8-729-230-49	s	TRANSISTOR 2SC2712-YG
Q3201	8-729-034-98	s	TRANSISTOR SI9434DY-T1
Q3601	8-729-101-07	s	TRANSISTOR 2SB798
R2101 ⚠	1-211-748-11	s	RES, CEMENT-COATED (FUSE) 5.6
R2102	1-216-065-91	s	RESISTOR,CHIP 4.7K 1/10W(2012)
R2104	1-220-269-11	s	RESISTOR, CHIP 330 1/2W (4532)
R2105	1-220-269-11	s	RESISTOR, CHIP 330 1/2W (4532)
R2106	1-216-063-91	s	RESISTOR,CHIP 3.9K 1/10W(2125)
R2107	1-216-065-91	s	RESISTOR,CHIP 4.7K 1/10W(2012)
R2109	1-216-065-91	s	RESISTOR,CHIP 4.7K 1/10W(2012)
R3107	1-249-389-11	s	RES,CARBON 4.7 1/4W
R3111	1-216-681-11	s	RESISTOR,CHIP 18K 1/10W (2012)
R3112	1-216-647-11	s	RESISTOR,CHIP 680 1/10W (2012)
R3113	1-216-677-11	s	RESISTOR,CHIP 12K 1/10W(2012)
R3114	1-216-627-11	s	RESISTOR,CHIP 100 1/10W (2012)
R3115	1-216-681-11	s	RESISTOR,CHIP 18K 1/10W (2012)

(G BOARD)

Ref. No. or Q'ty	Part No.	SP	Description
R3116	1-220-338-11	s	RESISTOR,CHIP 330K 1/2W (4532)
R3117	1-220-338-11	s	RESISTOR,CHIP 330K 1/2W (4532)
R3119	1-220-338-11	s	RESISTOR,CHIP 330K 1/2W (4532)
R3120	1-216-001-00	s	RESISTOR, CHIP 10 1/10W(2012)
R3121	1-216-001-00	s	RESISTOR, CHIP 10 1/10W(2012)
R3122	1-249-417-11	s	RESISTOR,CARBON 1K 1/4W(SMALL)
R3123	1-216-035-00	s	RESISTOR, CHIP 270 1/10W(2012)
R3124	1-216-073-00	s	RESISTOR,CHIP 10K 1/10W(2012)
R3125	1-216-073-00	s	RESISTOR,CHIP 10K 1/10W(2012)
R3126	1-202-933-61	s	RESISTOR, FUSE 0.1 1/2W
R3127	1-216-089-91	s	RESISTOR, CHIP 47K 1/10W(2012)
R3128	1-216-073-00	s	RESISTOR,CHIP 10K 1/10W(2012)
R3129	1-220-993-91	s	RESISTOR,CHIP 0.68 5025
R3130	1-220-993-91	s	RESISTOR,CHIP 0.68 5025
R3131	1-216-073-00	s	RESISTOR,CHIP 10K 1/10W(2012)
R3132	1-216-097-00	s	RESISTOR CHIP 100K 1/10W(2012)
R3133	1-216-073-00	s	RESISTOR,CHIP 10K 1/10W(2012)
R3134	1-216-049-11	s	RESISTOR, CHIP 1K 1/10W(2012)
R3135	1-216-047-91	s	RESISTOR, CHIP 820 1/10W(2125)
R3136	1-216-081-00	s	RESISTOR,CHIP 22K 1/10W(2012)
R3137	1-216-061-00	s	RESISTOR CHIP 3.3K 1/10W(2012)
R3138	1-216-041-00	s	RESISTOR, CHIP 470 1/10W(2012)
R3139	1-216-073-00	s	RESISTOR,CHIP 10K 1/10W(2012)
R3140	1-216-073-00	s	RESISTOR,CHIP 10K 1/10W(2012)
R3141	1-216-663-11	s	RESISTOR,CHIP 3.3K 1/10W(2012)
R3142	1-216-665-11	s	RESISTOR,CHIP 3.9K 1/10W(2012)
R3143	1-216-661-11	s	RESISTOR,CHIP 2.7K 1/10W(2012)
R3144	1-216-659-11	s	RESISTOR,CHIP 2.2K 1/10W(2012)
R3145	1-216-691-11	s	RESISTOR,CHIP 47K 1/10W(2012)
R3152	1-216-095-00	s	RESISTOR, CHIP 82K 1/10W(2012)
R3153	1-216-089-91	s	RESISTOR, CHIP 47K 1/10W(2012)
R3156	1-216-061-00	s	RESISTOR CHIP 3.3K 1/10W(2012)
R3157	1-216-089-91	s	RESISTOR, CHIP 47K 1/10W(2012)
R3158	1-216-073-00	s	RESISTOR,CHIP 10K 1/10W(2012)
R3161	1-216-073-00	s	RESISTOR,CHIP 10K 1/10W(2012)
R3201	1-216-073-00	s	RESISTOR,CHIP 10K 1/10W(2012)
R3202	1-216-057-00	s	RESISTOR CHIP 2.2K 1/10W(2012)
R3203	1-216-073-00	s	RESISTOR,CHIP 10K 1/10W(2012)
R3204	1-216-073-00	s	RESISTOR,CHIP 10K 1/10W(2012)
R3205	1-216-073-00	s	RESISTOR,CHIP 10K 1/10W(2012)
R3206	1-217-156-00	s	RESISTOR METAL 0.22/5W
R3207	1-216-049-11	s	RESISTOR, CHIP 1K 1/10W(2012)
R3209	1-216-675-11	s	RESISTOR,CHIP 10K 1/10W(2012)
R3210	1-216-295-91	s	CONDUCTOR, CHIP (2012)
R3211	1-216-095-00	s	RESISTOR, CHIP 82K 1/10W(2012)
R3212	1-216-089-91	s	RESISTOR, CHIP 47K 1/10W(2012)
R3213	1-216-698-11	s	RESISTOR,CHIP 91K 1/10W(2012)
R3214	1-216-691-11	s	RESISTOR,CHIP 47K 1/10W(2012)
R3216	1-216-073-00	s	RESISTOR,CHIP 10K 1/10W(2012)
R3217	1-216-679-11	s	RESISTOR,CHIP 15K 1/10W (2012)
R3218	1-216-691-11	s	RESISTOR,CHIP 47K 1/10W(2012)
R3219	1-240-182-11	s	RESISTOR,SQURE TYPE 47M
R3606	1-249-389-11	s	RES,CARBON 4.7 1/4W
R3608	1-216-057-00	s	RESISTOR CHIP 2.2K 1/10W(2012)
R3609	1-216-073-00	s	RESISTOR,CHIP 10K 1/10W(2012)
RY2101	1-755-275-11	s	RELAY, AC POWER (12V)
T1101	1-437-537-11	s	TRANSFORMER, CONVERTER

H BOARD

Ref. No. or Q'ty	Part No.	SP	Description
1pc	A-1375-226-A	s	MOUNTED CIRCUIT BOARD, H
C801	1-107-826-11	s	CAPACITOR,CHIP CERAMIC 0.1MF
CN801	1-770-629-21	s	PIN, CONNECTOR 12P
D801	8-719-045-61	s	DIODE SEC1901C
D802	8-719-045-61	s	DIODE SEC1901C
D803	8-719-045-51	s	DIODE SEC2422C
D804	8-719-045-53	s	DIODE SEC1801C
D805	8-719-914-43	s	DIODE DAN202K
D806	8-719-914-44	s	DIODE DAP202K (DUAL)
D807	8-719-914-43	s	DIODE DAN202K
D808	8-719-914-44	s	DIODE DAP202K (DUAL)
D809	8-719-914-43	s	DIODE DAN202K
D810	8-719-914-44	s	DIODE DAP202K (DUAL)
D811	8-719-914-43	s	DIODE DAN202K
D812	8-719-914-44	s	DIODE DAP202K (DUAL)
D813	8-719-914-43	s	DIODE DAN202K
D814	8-719-914-44	s	DIODE DAP202K (DUAL)
Q801	8-729-027-38	s	TRANSISTOR DTA144EKA-T146
R801	1-216-838-11	s	RESISTOR CHIP 27K 1/16W(1608)
R802	1-216-834-11	s	RESISTOR,CHIP 12K 1/16W 1608
R803	1-216-831-11	s	RESISTOR,CHIP 6.8K 1/16W(1608)
R804	1-216-828-11	s	RESISTOR, CHIP 3.9K 1/16W 1608
R805	1-216-826-11	s	RESISTOR,CHIP 2.7K 1/16W(1608)
R806	1-216-838-11	s	RESISTOR CHIP 27K 1/16W(1608)
R807	1-216-825-11	s	RESISTOR,CHIP 2.2K 1/16W 1608
R808	1-216-823-11	s	RESISTOR, CHIP 1.5K 1/16W
R809	1-216-834-11	s	RESISTOR,CHIP 12K 1/16W 1608
R810	1-216-835-11	s	RESISTOR,CHIP 15K 1/16W
R811	1-216-824-11	s	RESISTOR, CHIP 1.8K 1/16W 1608
R812	1-216-824-11	s	RESISTOR, CHIP 1.8K 1/16W 1608
R813	1-216-828-11	s	RESISTOR, CHIP 3.9K 1/16W 1608
R814	1-216-833-11	s	RESISTOR,CHIP 10K 1/16W (1608)
R815	1-216-833-11	s	RESISTOR,CHIP 10K 1/16W (1608)
R816	1-216-833-11	s	RESISTOR,CHIP 10K 1/16W (1608)
R817	1-216-815-11	s	RESISTOR,CHIP 330 1/16W 1608
R818	1-216-821-11	s	RESISTOR,CHIP 1.0K 1/16W(1608)
R819	1-216-833-11	s	RESISTOR,CHIP 10K 1/16W (1608)
R820	1-216-838-11	s	RESISTOR CHIP 27K 1/16W(1608)
R821	1-216-828-11	s	RESISTOR, CHIP 3.9K 1/16W 1608
S801	1-771-105-11	s	SWITCH, TACTILE
S802	1-771-105-11	s	SWITCH, TACTILE
S803	1-771-105-11	s	SWITCH, TACTILE
S804	1-771-105-11	s	SWITCH, TACTILE
S805	1-771-105-11	s	SWITCH, TACTILE
S806	1-771-105-11	s	SWITCH, TACTILE
S807	1-771-105-11	s	SWITCH, TACTILE
S808	1-771-105-11	s	SWITCH, TACTILE
S809	1-771-105-11	s	SWITCH, TACTILE
S810	1-771-105-11	s	SWITCH, TACTILE
S811	1-771-105-11	s	SWITCH, TACTILE
S812	1-771-105-11	s	SWITCH, TACTILE

MS BOARD

Ref. No. or Q'ty	Part No.	SP	Description
1pc	A-1306-610-A	s	MOUNTED CIRCUIT BOARD, MS
C801	1-107-826-11	s	CAPACITOR,CHIP CERAMIC 0.1MF
C802	1-107-826-11	s	CAPACITOR,CHIP CERAMIC 0.1MF
C803	1-107-826-11	s	CAPACITOR,CHIP CERAMIC 0.1MF
C804	1-107-826-11	s	CAPACITOR,CHIP CERAMIC 0.1MF
C805	1-107-826-11	s	CAPACITOR,CHIP CERAMIC 0.1MF
C806	1-110-501-11	s	CAPACITOR CERAMIC 0.33MF/16V
C807	1-119-667-11	s	CAPACITOR CERAMIC 22MF/10V(F)
C808	1-107-826-11	s	CAPACITOR,CHIP CERAMIC 0.1MF
C809	1-107-826-11	s	CAPACITOR,CHIP CERAMIC 0.1MF
C810	1-107-826-11	s	CAPACITOR,CHIP CERAMIC 0.1MF
C811	1-119-667-11	s	CAPACITOR CERAMIC 22MF/10V(F)
C812	1-107-826-11	s	CAPACITOR,CHIP CERAMIC 0.1MF
C813	1-162-916-11	s	CAPACITOR,CERAMIC 12PF/50V CH
C814	1-162-916-11	s	CAPACITOR,CERAMIC 12PF/50V CH
C815	1-115-416-11	s	CAPACITOR,CERAMIC 1000PF/25V
C816	1-115-416-11	s	CAPACITOR,CERAMIC 1000PF/25V
C817	1-162-927-11	s	CAPACITOR,CERAMIC 100PF/50V CH
C818	1-162-927-11	s	CAPACITOR,CERAMIC 100PF/50V CH
C823	1-107-826-11	s	CAPACITOR,CHIP CERAMIC 0.1MF
C824	1-107-826-11	s	CAPACITOR,CHIP CERAMIC 0.1MF
C825	1-127-715-11	s	CAPACITOR,CERAMIC 0.22MF B1608
C826	1-107-826-11	s	CAPACITOR,CHIP CERAMIC 0.1MF
C827	1-107-826-11	s	CAPACITOR,CHIP CERAMIC 0.1MF
C828	1-107-826-11	s	CAPACITOR,CHIP CERAMIC 0.1MF
C829	1-107-826-11	s	CAPACITOR,CHIP CERAMIC 0.1MF
C830	1-107-826-11	s	CAPACITOR,CHIP CERAMIC 0.1MF
C831	1-107-826-11	s	CAPACITOR,CHIP CERAMIC 0.1MF
C832	1-107-826-11	s	CAPACITOR,CHIP CERAMIC 0.1MF
C833	1-107-826-11	s	CAPACITOR,CHIP CERAMIC 0.1MF
C834	1-107-826-11	s	CAPACITOR,CHIP CERAMIC 0.1MF
C835	1-107-826-11	s	CAPACITOR,CHIP CERAMIC 0.1MF
C836	1-107-826-11	s	CAPACITOR,CHIP CERAMIC 0.1MF
C837	1-107-826-11	s	CAPACITOR,CHIP CERAMIC 0.1MF
C838	1-107-826-11	s	CAPACITOR,CHIP CERAMIC 0.1MF
C839	1-107-826-11	s	CAPACITOR,CHIP CERAMIC 0.1MF
C840	1-119-667-11	s	CAPACITOR CERAMIC 22MF/10V(F)
C841	1-107-826-11	s	CAPACITOR,CHIP CERAMIC 0.1MF
C842	1-107-826-11	s	CAPACITOR,CHIP CERAMIC 0.1MF
C843	1-107-826-11	s	CAPACITOR,CHIP CERAMIC 0.1MF
C844	1-107-826-11	s	CAPACITOR,CHIP CERAMIC 0.1MF
C845	1-107-826-11	s	CAPACITOR,CHIP CERAMIC 0.1MF
C846	1-107-826-11	s	CAPACITOR,CHIP CERAMIC 0.1MF
C847	1-107-826-11	s	CAPACITOR,CHIP CERAMIC 0.1MF
C849	1-107-826-11	s	CAPACITOR,CHIP CERAMIC 0.1MF
C850	1-107-826-11	s	CAPACITOR,CHIP CERAMIC 0.1MF
C851	1-107-826-11	s	CAPACITOR,CHIP CERAMIC 0.1MF
C852	1-107-826-11	s	CAPACITOR,CHIP CERAMIC 0.1MF
C853	1-107-826-11	s	CAPACITOR,CHIP CERAMIC 0.1MF
C860	1-107-826-11	s	CAPACITOR,CHIP CERAMIC 0.1MF
C861	1-107-826-11	s	CAPACITOR,CHIP CERAMIC 0.1MF
C862	1-107-826-11	s	CAPACITOR,CHIP CERAMIC 0.1MF
C863	1-119-667-11	s	CAPACITOR CERAMIC 22MF/10V(F)
C864	1-162-927-11	s	CAPACITOR,CERAMIC 100PF/50V CH
CN801	1-815-368-12	l	CONNECTOR, CARD (MEMORY STICK)
CN802	1-793-141-11	o	PIN, CONNECTOR (PC BOARD)
CN803	1-770-625-21	s	PIN, CONNECTOR 8P
CN804	1-815-353-21	o	CONNECTOR, BORD TO BOARD 50P

(MS BOARD)

Ref. No. or Q'ty	Part No.	SP	Description
D801	8-719-078-89	s	DIODE CL-190B1-X-T
D805	8-719-081-42	s	DIODE UMZ6.8N-T106
D806	8-719-081-42	s	DIODE UMZ6.8N-T106
D807	8-719-081-42	s	DIODE UMZ6.8N-T106
D808	8-719-083-58	s	DIODE UDZSTE-173.9B
FB801	1-414-921-11	s	INDUCTOR, FERRITE BEAD
FB802	1-414-921-11	s	INDUCTOR, FERRITE BEAD
FB803	1-414-921-11	s	INDUCTOR, FERRITE BEAD
FB804	1-414-921-11	s	INDUCTOR, FERRITE BEAD
FB805	1-414-921-11	s	INDUCTOR, FERRITE BEAD
FB806	1-500-451-11	s	MICRO INDUCTOR (CHIP) 41P750S
FB807	1-414-921-11	s	INDUCTOR, FERRITE BEAD
FB808	1-414-921-11	s	INDUCTOR, FERRITE BEAD
FB809	1-414-921-11	s	INDUCTOR, FERRITE BEAD
FB810	1-414-921-11	s	INDUCTOR, FERRITE BEAD
FB811	1-414-921-11	s	INDUCTOR, FERRITE BEAD
IC801	6-700-921-01	s	IC MD2305F
IC802	6-800-884-12		IC SST39VF800A70-1719A-T
IC803	6-701-043-11	s	IC HM62V16256CLTT-5SLZ
IC804	8-759-460-72	s	IC BA033FP
IC805	8-759-584-32	s	IC MB86189PFV-G-BND-ER
IC806	8-759-661-55	s	IC ST24FC21M6TR
IC807	8-759-331-27	s	IC MM1096AFF
IC808	8-759-831-91	s	IC MT48LC8M16A2TG-75TR
IC810	6-800-258-02	o	IC ISPLSI2032VE-110LT44/1714A
IC815	8-759-698-31	s	IC TC7WH74FK(TE85R)
IC816	6-700-379-01	s	IC TC74HC148AF(EL)
IC817	8-759-831-69	s	IC BA10339FV-E2
IC818	8-759-510-73	s	IC BA10393F-E2
Q801	8-729-029-14	s	TRANSISTOR DTC144EUA-T106
Q802	8-729-140-63	s	TRANSISTOR 2SA1611-M5M6
Q803	8-729-013-28	s	TRANSISTOR HN1B01FU-TE85R
Q804	8-729-140-63	s	TRANSISTOR 2SA1611-M5M6
Q805	8-729-427-72	s	TRANSISTOR XP4501-TXE
R801	1-216-864-11	s	CONDUCTOR, CHIP (1608)
R802	1-216-864-11	s	CONDUCTOR, CHIP (1608)
R803	1-216-864-11	s	CONDUCTOR, CHIP (1608)
R804	1-216-864-11	s	CONDUCTOR, CHIP (1608)
R805	1-216-864-11	s	CONDUCTOR, CHIP (1608)
R806	1-216-864-11	s	CONDUCTOR, CHIP (1608)
R807	1-216-864-11	s	CONDUCTOR, CHIP (1608)
R808	1-216-833-11	s	RESISTOR,CHIP 10K 1/16W (1608)
R809	1-216-857-11	s	RESISTOR,CHIP 1M 1/16W(1608)
R810	1-216-833-11	s	RESISTOR,CHIP 10K 1/16W (1608)
R811	1-216-833-11	s	RESISTOR,CHIP 10K 1/16W (1608)
R812	1-216-833-11	s	RESISTOR,CHIP 10K 1/16W (1608)
R813	1-216-833-11	s	RESISTOR,CHIP 10K 1/16W (1608)
R814	1-216-864-11	s	CONDUCTOR, CHIP (1608)
R815	1-216-845-11	s	RESISTOR,CHIP 100K 1/16W(1608)
R816	1-216-845-11	s	RESISTOR,CHIP 100K 1/16W(1608)
R817	1-216-864-11	s	CONDUCTOR, CHIP (1608)
R818	1-216-845-11	s	RESISTOR,CHIP 100K 1/16W(1608)
R819	1-216-845-11	s	RESISTOR,CHIP 100K 1/16W(1608)
R820	1-216-845-11	s	RESISTOR,CHIP 100K 1/16W(1608)
R821	1-216-864-11	s	CONDUCTOR, CHIP (1608)
R822	1-216-833-11	s	RESISTOR,CHIP 10K 1/16W (1608)
R823	1-216-833-11	s	RESISTOR,CHIP 10K 1/16W (1608)
R825	1-216-809-11	s	RESISTOR,CHIP 100 1/16W 1608

(MS BOARD)

Ref. No. or Q'ty	Part No.	SP	Description
R826	1-216-864-11	s	CONDUCTOR, CHIP (1608)
R827	1-216-864-11	s	CONDUCTOR, CHIP (1608)
R828	1-216-809-11	s	RESISTOR,CHIP 100 1/16W 1608
R829	1-216-864-11	s	CONDUCTOR, CHIP (1608)
R830	1-216-845-11	s	RESISTOR,CHIP 100K 1/16W(1608)
R831	1-216-864-11	s	CONDUCTOR, CHIP (1608)
R834	1-216-821-11	s	RESISTOR,CHIP 1.0K 1/16W(1608)
R835	1-216-825-11	s	RESISTOR,CHIP 2.2K 1/16W 1608
R836	1-216-809-11	s	RESISTOR,CHIP 100 1/16W 1608
R840	1-216-809-11	s	RESISTOR,CHIP 100 1/16W 1608
R841	1-216-809-11	s	RESISTOR,CHIP 100 1/16W 1608
R843	1-216-833-11	s	RESISTOR,CHIP 10K 1/16W (1608)
R844	1-216-809-11	s	RESISTOR,CHIP 100 1/16W 1608
R845	1-216-809-11	s	RESISTOR,CHIP 100 1/16W 1608
R846	1-216-829-11	s	RESISTOR,CHIP 4.7K 1/16W(1608)
R847	1-216-833-11	s	RESISTOR,CHIP 10K 1/16W (1608)
R848	1-216-839-11	s	RESISTOR,CHIP 33K 1/16W 1608
R849	1-216-839-11	s	RESISTOR,CHIP 33K 1/16W 1608
R850	1-216-833-11	s	RESISTOR,CHIP 10K 1/16W (1608)
R851	1-216-864-11	s	CONDUCTOR, CHIP (1608)
R852	1-216-833-11	s	RESISTOR,CHIP 10K 1/16W (1608)
R853	1-216-829-11	s	RESISTOR,CHIP 4.7K 1/16W(1608)
R854	1-216-864-11	s	CONDUCTOR, CHIP (1608)
R855	1-216-864-11	s	CONDUCTOR, CHIP (1608)
R856	1-216-845-11	s	RESISTOR,CHIP 100K 1/16W(1608)
R857	1-216-809-11	s	RESISTOR,CHIP 100 1/16W 1608
R858	1-216-864-11	s	CONDUCTOR, CHIP (1608)
R859	1-216-833-11	s	RESISTOR,CHIP 10K 1/16W (1608)
R860	1-216-833-11	s	RESISTOR,CHIP 10K 1/16W (1608)
R861	1-216-801-11	s	RESISTOR,CHIP 22 1/16W (1608)
R862	1-216-809-11	s	RESISTOR,CHIP 100 1/16W 1608
R863	1-216-809-11	s	RESISTOR,CHIP 100 1/16W 1608
R864	1-216-833-11	s	RESISTOR,CHIP 10K 1/16W (1608)
R865	1-216-809-11	s	RESISTOR,CHIP 100 1/16W 1608
R866	1-216-864-11	s	CONDUCTOR, CHIP (1608)
R867	1-216-807-11	s	RESISTOR, CHIP 68 1/16W 1608
R869	1-216-809-11	s	RESISTOR,CHIP 100 1/16W 1608
R870	1-216-864-11	s	CONDUCTOR, CHIP (1608)
R871	1-216-809-11	s	RESISTOR,CHIP 100 1/16W 1608
R872	1-216-821-11	s	RESISTOR,CHIP 1.0K 1/16W(1608)
R873	1-216-801-11	s	RESISTOR,CHIP 22 1/16W (1608)
R874	1-216-864-11	s	CONDUCTOR, CHIP (1608)
R876	1-216-864-11	s	CONDUCTOR, CHIP (1608)
R877	1-216-864-11	s	CONDUCTOR, CHIP (1608)
R878	1-216-828-11	s	RESISTOR, CHIP 3.9K 1/16W 1608
R879	1-216-831-11	s	RESISTOR,CHIP 6.8K 1/16W(1608)
R880	1-216-829-11	s	RESISTOR,CHIP 4.7K 1/16W(1608)
R881	1-216-833-11	s	RESISTOR,CHIP 10K 1/16W (1608)
R882	1-216-828-11	s	RESISTOR, CHIP 3.9K 1/16W 1608
R883	1-216-831-11	s	RESISTOR,CHIP 6.8K 1/16W(1608)
R884	1-216-809-11	s	RESISTOR,CHIP 100 1/16W 1608
R885	1-216-833-11	s	RESISTOR,CHIP 10K 1/16W (1608)
R887	1-216-833-11	s	RESISTOR,CHIP 10K 1/16W (1608)
R889	1-216-864-11	s	CONDUCTOR, CHIP (1608)
R890	1-216-864-11	s	CONDUCTOR, CHIP (1608)
R892	1-216-833-11	s	RESISTOR,CHIP 10K 1/16W (1608)
R893	1-216-833-11	s	RESISTOR,CHIP 10K 1/16W (1608)
R895	1-216-801-11	s	RESISTOR,CHIP 22 1/16W (1608)
R896	1-216-809-11	s	RESISTOR,CHIP 100 1/16W 1608

(MS BOARD)

Ref. No. or Q'ty	Part No.	SP	Description
R897	1-216-809-11	s	RESISTOR,CHIP 100 1/16W 1608
R899	1-216-833-11	s	RESISTOR,CHIP 10K 1/16W (1608)
R900	1-216-833-11	s	RESISTOR,CHIP 10K 1/16W (1608)
R902	1-216-864-11	s	CONDUCTOR, CHIP (1608)
R903	1-216-831-11	s	RESISTOR,CHIP 6.8K 1/16W(1608)
R904	1-216-828-11	s	RESISTOR, CHIP 3.9K 1/16W 1608
R905	1-216-833-11	s	RESISTOR,CHIP 10K 1/16W (1608)
R906	1-216-809-11	s	RESISTOR,CHIP 100 1/16W 1608
R907	1-216-809-11	s	RESISTOR,CHIP 100 1/16W 1608
R908	1-216-801-11	s	RESISTOR,CHIP 22 1/16W (1608)
R909	1-216-809-11	s	RESISTOR,CHIP 100 1/16W 1608
R910	1-216-809-11	s	RESISTOR,CHIP 100 1/16W 1608
R913	1-216-811-11	s	RESISTOR, CHIP 150 1/16W(1608)
R914	1-216-833-11	s	RESISTOR,CHIP 10K 1/16W (1608)
R915	1-216-809-11	s	RESISTOR,CHIP 100 1/16W 1608
R916	1-216-809-11	s	RESISTOR,CHIP 100 1/16W 1608
R917	1-216-833-11	s	RESISTOR,CHIP 10K 1/16W (1608)
R918	1-216-833-11	s	RESISTOR,CHIP 10K 1/16W (1608)
R919	1-216-841-11	s	RESISTOR, CHIP 47K 1/16W 1608
R920	1-216-841-11	s	RESISTOR, CHIP 47K 1/16W 1608
R921	1-216-809-11	s	RESISTOR,CHIP 100 1/16W 1608
R922	1-216-809-11	s	RESISTOR,CHIP 100 1/16W 1608
R923	1-216-841-11	s	RESISTOR, CHIP 47K 1/16W 1608
R926	1-218-704-11	s	RESISTOR,CHIP 3.3K 1/16W(1608)
R927	1-218-700-11	s	RESISTOR,CHIP 2.2K 1/16W(1608)
R928	1-218-696-11	s	RESISTOR,CHIP 1.5K 1/16W(1608)
R929	1-218-703-11	s	RESISTOR,CHIP 3.0K 1/16(1608)
R930	1-216-833-11	s	RESISTOR,CHIP 10K 1/16W (1608)
R931	1-216-833-11	s	RESISTOR,CHIP 10K 1/16W (1608)
R932	1-216-833-11	s	RESISTOR,CHIP 10K 1/16W (1608)
R933	1-216-833-11	s	RESISTOR,CHIP 10K 1/16W (1608)
R934	1-218-720-11	s	RESISTOR,CHIP 15K 1/16W(1608)
R935	1-218-712-11	s	RESISTOR,METAL 6.8K 1/16W
R936	1-218-710-11	s	RESISTOR,CHIP 5.6K 1/16W(1608)
R937	1-218-704-11	s	RESISTOR,CHIP 3.3K 1/16W(1608)
R938	1-218-704-11	s	RESISTOR,CHIP 3.3K 1/16W(1608)
R939	1-218-710-11	s	RESISTOR,CHIP 5.6K 1/16W(1608)
R940	1-218-710-11	s	RESISTOR,CHIP 5.6K 1/16W(1608)
R941	1-218-712-11	s	RESISTOR,METAL 6.8K 1/16W
R942	1-216-833-11	s	RESISTOR,CHIP 10K 1/16W (1608)
R943	1-216-833-11	s	RESISTOR,CHIP 10K 1/16W (1608)
R945	1-216-833-11	s	RESISTOR,CHIP 10K 1/16W (1608)
R946	1-216-809-11	s	RESISTOR,CHIP 100 1/16W 1608
RB801	1-233-810-21	s	RES, NETWORK 100K (3216)
RB802	1-233-810-21	s	RES, NETWORK 100K (3216)
RB803	1-233-810-21	s	RES, NETWORK 100K (3216)
RB804	1-233-810-21	s	RES, NETWORK 100K (3216)
RB805	1-233-576-11	s	RESISTOR,CHIP NETWORK 100
RB806	1-236-908-11	s	RESISTOR,NETWORK 10K (3216)
RB807	1-233-574-11	s	RESISTOR,CHIP NETWORK 10
RB808	1-233-574-11	s	RESISTOR,CHIP NETWORK 10
RB809	1-233-574-11	s	RESISTOR,CHIP NETWORK 10
RB810	1-233-574-11	s	RESISTOR,CHIP NETWORK 10
RB811	1-233-576-11	s	RESISTOR,CHIP NETWORK 100
TP801	1-535-757-11	s	CHIP, CHECKER (CONNECTOR)
X801	1-795-098-11	s	VIBRATOR, CRYSTAL
X804	1-781-976-11	s	OSCILLATOR, CRYSTAL

NF BOARD

Ref. No. or Q'ty	Part No.	SP	Description
1pc	A-1391-156-A	s	MOUNTED CIRCUIT BOARD, NF
C101	1-164-004-11	s	CAPACITOR,CERAMIC 0.1MF/25V
CN101	1-568-346-21	s	CONNECTOR, BOARD TO BOARD 4P
IC101	8-719-066-43	s	DIODE GP1U28Y
R101	1-216-025-00	s	RESISTOR,CHIP 100 1/10W(2012)

NR BOARD

Ref. No. or Q'ty	Part No.	SP	Description
1pc	A-1391-155-A	s	MOUNTED CIRCUIT BOARD, NR
C901	1-117-370-11	s	CAPASITER CERAMIC 10MF (3216)
C902	1-162-970-11	s	CAPACITOR CERAMIC 0.01MF/25V B
CN901	1-580-057-11	o	PIN,CONNECTOR 4P
IC901	8-749-012-17	s	IC RS-140-T
R901	1-216-805-11	s	RESISTOR,CHIP 47 1/16W 1608
R902	1-216-809-11	s	RESISTOR,CHIP 100 1/16W 1608
R903	1-218-702-11	s	RESISTOR CHIP 2.7K 1/16W(1608)
TH901	1-808-656-11	s	THERMISTOR

Q BOARD

Ref. No. or Q'ty	Part No.	SP	Description
1pc	A-1275-212-A	s	MOUNTED CIRCUIT BOARD, Q
C401	1-128-004-11	s	CAPACITOR ELECT 10MF/16V(CHIP)
C402	1-128-004-11	s	CAPACITOR ELECT 10MF/16V(CHIP)
C403	1-128-004-11	s	CAPACITOR ELECT 10MF/16V(CHIP)
C404	1-126-205-11	s	CAPACITOR,ELECT 47M/6.3
C405	1-107-826-11	s	CAPACITOR,CHIP CERAMIC 0.1MF
C406	1-126-205-11	s	CAPACITOR,ELECT 47M/6.3
C407	1-107-826-11	s	CAPACITOR,CHIP CERAMIC 0.1MF
C408	1-126-205-11	s	CAPACITOR,ELECT 47M/6.3
C409	1-107-826-11	s	CAPACITOR,CHIP CERAMIC 0.1MF
C410	1-128-004-11	s	CAPACITOR ELECT 10MF/16V(CHIP)
C411	1-128-004-11	s	CAPACITOR ELECT 10MF/16V(CHIP)
C412	1-107-826-11	s	CAPACITOR,CHIP CERAMIC 0.1MF
C413	1-128-004-11	s	CAPACITOR ELECT 10MF/16V(CHIP)
C414	1-128-004-11	s	CAPACITOR ELECT 10MF/16V(CHIP)
C415	1-128-004-11	s	CAPACITOR ELECT 10MF/16V(CHIP)
C416	1-128-004-11	s	CAPACITOR ELECT 10MF/16V(CHIP)
C417	1-107-826-11	s	CAPACITOR,CHIP CERAMIC 0.1MF
C418	1-107-826-11	s	CAPACITOR,CHIP CERAMIC 0.1MF
C419	1-107-826-11	s	CAPACITOR,CHIP CERAMIC 0.1MF
C420	1-107-826-11	s	CAPACITOR,CHIP CERAMIC 0.1MF
C421	1-117-681-11	s	CAPACITOR, ELECT 100MF/16V
C423	1-127-573-11	s	CAPACITOR,CERAMIC 1MFB(2012)
C424	1-107-826-11	s	CAPACITOR,CHIP CERAMIC 0.1MF
C425	1-107-826-11	s	CAPACITOR,CHIP CERAMIC 0.1MF
C426	1-107-826-11	s	CAPACITOR,CHIP CERAMIC 0.1MF
C427	1-117-681-11	s	CAPACITOR, ELECT 100MF/16V
C428	1-107-826-11	s	CAPACITOR,CHIP CERAMIC 0.1MF
C429	1-107-826-11	s	CAPACITOR,CHIP CERAMIC 0.1MF
C430	1-107-826-11	s	CAPACITOR,CHIP CERAMIC 0.1MF
C431	1-107-826-11	s	CAPACITOR,CHIP CERAMIC 0.1MF
C435	1-109-982-11	s	CAPACITOR,CHIP CERAMIC 1MF/10V
C436	1-115-566-11	s	CAPACITOR,CERAMIC 4.7MF B/6.3V
C437	1-115-566-11	s	CAPACITOR,CERAMIC 4.7MF B/6.3V
C438	1-110-563-11	s	CAPACITOR CERAMIC 0.068MF/16V
C439	1-128-004-11	s	CAPACITOR ELECT 10MF/16V(CHIP)
C440	1-117-681-11	s	CAPACITOR, ELECT 100MF/16V
C441	1-107-826-11	s	CAPACITOR,CHIP CERAMIC 0.1MF
C442	1-164-230-11	s	CAPACITOR,CERAMIC 220PF/50V
C443	1-162-927-11	s	CAPACITOR,CERAMIC 100PF/50V CH
C444	1-126-205-11	s	CAPACITOR,ELECT 47M/6.3
C445	1-107-826-11	s	CAPACITOR,CHIP CERAMIC 0.1MF
C446	1-162-927-11	s	CAPACITOR,CERAMIC 100PF/50V CH
C447	1-162-964-11	s	CAPACITOR,CERAMIC 1000PF/50V B
C448	1-115-156-11	s	CAPACITOR,CERAMIC 1MF/10V(1608
C449	1-115-156-11	s	CAPACITOR,CERAMIC 1MF/10V(1608
C450	1-162-927-11	s	CAPACITOR,CERAMIC 100PF/50V CH
C451	1-115-156-11	s	CAPACITOR,CERAMIC 1MF/10V(1608
C503	1-164-004-11	s	CAPACITOR,CERAMIC 0.1MF/25V
C505	1-165-112-11	s	CAPACITOR,CERAMIC 0.33MF/16V F
C506	1-164-506-11	s	CAPACITOR,CERAMIC 4.7MF/16V
C507	1-128-992-11	s	CAPACITOR ELECT 47MF 25V
C508	1-164-506-11	s	CAPACITOR,CERAMIC 4.7MF/16V
C509	1-162-924-11	s	CAPACITOR,CERAMIC 56PF/50V CH
C510	1-117-681-11	s	CAPACITOR, ELECT 100MF/16V
C511	1-164-004-11	s	CAPACITOR,CERAMIC 0.1MF/25V
C512	1-107-826-11	s	CAPACITOR,CHIP CERAMIC 0.1MF
C513	1-107-826-11	s	CAPACITOR,CHIP CERAMIC 0.1MF

(Q BOARD)

Ref. No. or Q'ty	Part No.	SP	Description
C514	1-126-396-11	s	CAPACITOR,ELECT 47MF/16V(CHIP)
C515	1-115-156-11	s	CAPACITOR,CERAMIC 1MF/10V(1608
C517	1-117-681-11	s	CAPACITOR, ELECT 100MF/16V
C518	1-117-681-11	s	CAPACITOR, ELECT 100MF/16V
C519	1-107-826-11	s	CAPACITOR,CHIP CERAMIC 0.1MF
C520	1-107-826-11	s	CAPACITOR,CHIP CERAMIC 0.1MF
C523	1-128-004-11	s	CAPACITOR ELECT 10MF/16V(CHIP)
C524	1-164-156-11	s	CAPACITOR,CERAMIC 0.1MF/25V F
C534	1-128-004-11	s	CAPACITOR ELECT 10MF/16V(CHIP)
C535	1-109-982-11	s	CAPACITOR,CHIP CERAMIC 1MF/10V
C536	1-126-400-11	s	CAPACITOR ELECT 22MF/35V(CHIP)
C539	1-115-566-11	s	CAPACITOR,CERAMIC 4.7MF B/6.3V
C540	1-115-566-11	s	CAPACITOR,CERAMIC 4.7MF B/6.3V
C541	1-107-826-11	s	CAPACITOR,CHIP CERAMIC 0.1MF
C542	1-107-826-11	s	CAPACITOR,CHIP CERAMIC 0.1MF
C543	1-107-826-11	s	CAPACITOR,CHIP CERAMIC 0.1MF
C544	1-107-826-11	s	CAPACITOR,CHIP CERAMIC 0.1MF
C545	1-162-964-11	s	CAPACITOR,CERAMIC 1000PF/50V B
C602	1-164-004-11	s	CAPACITOR,CERAMIC 0.1MF/25V
C603	1-107-826-11	s	CAPACITOR,CHIP CERAMIC 0.1MF
C604	1-164-004-11	s	CAPACITOR,CERAMIC 0.1MF/25V
C605	1-126-204-11	s	CAPACITOR, ELECT 47MF/16V(CHIP
C606	1-164-156-11	s	CAPACITOR,CERAMIC 0.1MF/25V F
C607	1-125-891-11	s	CAPACITOR CERAMIC 0.47MF/10V
C608	1-125-891-11	s	CAPACITOR CERAMIC 0.47MF/10V
C609	1-125-891-11	s	CAPACITOR CERAMIC 0.47MF/10V
C610	1-125-891-11	s	CAPACITOR CERAMIC 0.47MF/10V
C611	1-125-891-11	s	CAPACITOR CERAMIC 0.47MF/10V
C612	1-125-891-11	s	CAPACITOR CERAMIC 0.47MF/10V
C613	1-126-204-11	s	CAPACITOR, ELECT 47MF/16V(CHIP
C614	1-164-156-11	s	CAPACITOR,CERAMIC 0.1MF/25V F
C615	1-125-891-11	s	CAPACITOR CERAMIC 0.47MF/10V
C616	1-125-891-11	s	CAPACITOR CERAMIC 0.47MF/10V
C617	1-125-891-11	s	CAPACITOR CERAMIC 0.47MF/10V
C618	1-125-891-11	s	CAPACITOR CERAMIC 0.47MF/10V
C619	1-125-891-11	s	CAPACITOR CERAMIC 0.47MF/10V
C620	1-125-891-11	s	CAPACITOR CERAMIC 0.47MF/10V
C621	1-125-891-11	s	CAPACITOR CERAMIC 0.47MF/10V
C622	1-164-004-11	s	CAPACITOR,CERAMIC 0.1MF/25V
C623	1-125-891-11	s	CAPACITOR CERAMIC 0.47MF/10V
C624	1-125-891-11	s	CAPACITOR CERAMIC 0.47MF/10V
C625	1-125-891-11	s	CAPACITOR CERAMIC 0.47MF/10V
C626	1-162-959-11	s	CAPACITOR,CERAMIC 330PF/50V SL
C627	1-162-927-11	s	CAPACITOR,CERAMIC 100PF/50V CH
C628	1-125-891-11	s	CAPACITOR CERAMIC 0.47MF/10V
C629	1-125-891-11	s	CAPACITOR CERAMIC 0.47MF/10V
C630	1-125-891-11	s	CAPACITOR CERAMIC 0.47MF/10V
C631	1-128-004-11	s	CAPACITOR ELECT 10MF/16V(CHIP)
C632	1-125-891-11	s	CAPACITOR CERAMIC 0.47MF/10V
C633	1-125-891-11	s	CAPACITOR CERAMIC 0.47MF/10V
C634	1-125-891-11	s	CAPACITOR CERAMIC 0.47MF/10V
C635	1-125-891-11	s	CAPACITOR CERAMIC 0.47MF/10V
C636	1-125-891-11	s	CAPACITOR CERAMIC 0.47MF/10V
C637	1-125-891-11	s	CAPACITOR CERAMIC 0.47MF/10V
C638	1-125-891-11	s	CAPACITOR CERAMIC 0.47MF/10V
C639	1-125-891-11	s	CAPACITOR CERAMIC 0.47MF/10V
C640	1-125-891-11	s	CAPACITOR CERAMIC 0.47MF/10V
C641	1-125-891-11	s	CAPACITOR CERAMIC 0.47MF/10V
C642	1-107-826-11	s	CAPACITOR,CHIP CERAMIC 0.1MF

(Q BOARD)

Ref. No. or Q'ty	Part No.	SP	Description	
C643	1-125-891-11	s	CAPACITOR CERAMIC 0.47MF/10V	
C644	1-128-010-11	s	CAPACITOR,ERECT 0.22MF/50V	
C645	1-125-891-11	s	CAPACITOR CERAMIC 0.47MF/10V	
C646	1-125-891-11	s	CAPACITOR CERAMIC 0.47MF/10V	
C647	1-128-013-11	s	CAPACITOR ERECT 1MF/50V	
C648	1-125-891-11	s	CAPACITOR CERAMIC 0.47MF/10V	
C649	1-128-004-11	s	CAPACITOR ELECT 10MF/16V(CHIP)	
C650	1-125-891-11	s	CAPACITOR CERAMIC 0.47MF/10V	
C651	1-125-891-11	s	CAPACITOR CERAMIC 0.47MF/10V	
C652	1-125-891-11	s	CAPACITOR CERAMIC 0.47MF/10V	
C653	1-126-204-11	s	CAPACITOR, ELECT 47MF/16V(CHIP	
C654	1-107-826-11	s	CAPACITOR,CHIP CERAMIC 0.1MF	
C655	1-162-970-11	s	CAPACITOR CERAMIC 0.01MF/25V B	
C656	1-128-004-11	s	CAPACITOR ELECT 10MF/16V(CHIP)	
C657	1-107-826-11	s	CAPACITOR,CHIP CERAMIC 0.1MF	
C658	1-107-826-11	s	CAPACITOR,CHIP CERAMIC 0.1MF	
C659	1-164-156-11	s	CAPACITOR,CERAMIC 0.1MF/25V F	
C660	1-164-156-11	s	CAPACITOR,CERAMIC 0.1MF/25V F	
C661	1-164-156-11	s	CAPACITOR,CERAMIC 0.1MF/25V F	
C662	1-164-156-11	s	CAPACITOR,CERAMIC 0.1MF/25V F	
C663	1-126-204-11	s	CAPACITOR, ELECT 47MF/16V(CHIP	
C666	1-107-826-11	s	CAPACITOR,CHIP CERAMIC 0.1MF	
C667	1-115-416-11	s	CAPACITOR,CERAMIC 1000PF/25V	
C668	1-107-823-11	s	CAPACITOR,CERAMIC 0.47MF/16V	
C669	1-126-395-11	s	CAPACITOR,ELECT 22MF/16V(CHIP)	
C670	1-126-395-11	s	CAPACITOR,ELECT 22MF/16V(CHIP)	
C671	1-126-395-11	s	CAPACITOR,ELECT 22MF/16V(CHIP)	
C674	1-107-826-11	s	CAPACITOR,CHIP CERAMIC 0.1MF	
C675	1-107-826-11	s	CAPACITOR,CHIP CERAMIC 0.1MF	
C701	1-128-004-11	s	CAPACITOR ELECT 10MF/16V(CHIP)	
C702	1-128-004-11	s	CAPACITOR ELECT 10MF/16V(CHIP)	
C703	1-128-004-11	s	CAPACITOR ELECT 10MF/16V(CHIP)	
C704	1-128-004-11	s	CAPACITOR ELECT 10MF/16V(CHIP)	
C705	1-126-395-11	s	CAPACITOR,ELECT 22MF/16V(CHIP)	
C706	1-164-004-11	s	CAPACITOR,CERAMIC 0.1MF/25V	
C707	1-162-917-11	s	CAPACITOR,CERAMIC 15PF/50V CH	
C708	1-162-917-11	s	CAPACITOR,CERAMIC 15PF/50V CH	
CN401	1-815-914-11	s	CONNECTOR, SQUARE TYPE (32P)	
CN502	1-793-798-21	o	CONNECTOR, BOARD TO BOARD	
CN503	1-573-290-21	s	PIN,CONNECTOR (4P)(SMD)(1.5MM)	
CN601	1-770-454-21	o	CONNECTOR, BOARD TO BOARD 70P	
CN702	1-793-798-21	o	CONNECTOR, BOARD TO BOARD	
CN703	1-695-320-21	o	PIN, CONNECTOR(1.5MM)SMD 2P	
CN704	1-691-550-11	s	PIN,CONNECTOR (3P)(SMD)(1.5MM)	
D401	8-719-073-11	s	DIODE BZA456A	
D402	8-719-158-35	s	DIODE RD9.1SB	(ZENER)
D403	8-719-158-35	s	DIODE RD9.1SB	(ZENER)
D404	8-719-158-35	s	DIODE RD9.1SB	(ZENER)
D405	8-719-158-35	s	DIODE RD9.1SB	(ZENER)
D406	8-719-158-35	s	DIODE RD9.1SB	(ZENER)
D407	8-719-158-35	s	DIODE RD9.1SB	(ZENER)
D408	8-719-800-76	s	DIODE 1SS226	
D409	8-719-800-76	s	DIODE 1SS226	
D410	8-719-800-76	s	DIODE 1SS226	
D501	8-719-073-01	s	DIODE MA111-(K8).S0	
D502	8-719-800-76	s	DIODE 1SS226	
D506	8-719-024-77	s	DIODE HN1D03FU-TE85L	
D507	8-719-988-61	s	DIODE 1SS355TE-17	

(Q BOARD)

Ref. No. or Q'ty	Part No.	SP	Description
D508	8-719-988-61	s	DIODE 1SS355TE-17
D601	8-719-988-61	s	DIODE 1SS355TE-17
D701	8-719-158-37	s	DIODE RD9.1SB2
D702	8-719-158-37	s	DIODE RD9.1SB2
D703	8-719-158-37	s	DIODE RD9.1SB2
D704	8-719-158-37	s	DIODE RD9.1SB2
FB401	1-414-921-11	s	INDUCTOR, FERRITE BEAD
FB501	1-414-921-11	s	INDUCTOR, FERRITE BEAD
FB502	1-414-921-11	s	INDUCTOR, FERRITE BEAD
FB503	1-414-921-11	s	INDUCTOR, FERRITE BEAD
IC401	8-759-661-55	s	IC ST24FC21M6TR
IC402	8-759-492-19	s	IC MM1231XFBE
IC403	8-759-541-25	s	IC M52758FP
IC404	6-701-056-11	s	IC LT1399CGNTR
IC405	8-759-646-02	s	IC M52347FP-TE
IC406	8-752-072-81	s	IC CXA1875AM
IC407	8-759-472-37	s	IC 74VHC240MTCX
IC408	8-759-472-35	s	IC 74VHC221AMTCX
IC409	8-759-082-55	s	IC TC7W00FU
IC501	8-759-460-82	s	IC BA15FP-E2
IC502	8-759-533-85	s	IC L88M05T-FA-TL
IC503	8-759-460-81	s	IC BA12FP-E2
IC504	8-759-066-55	s	IC TA75W393FU
IC505	8-759-652-56	s	IC BA033F-E2
IC506	8-759-457-53	s	IC GS1881-CTA
IC507	8-759-460-79	s	IC BA09FP-E2
IC508	8-759-082-61	s	IC TC4W53FU
IC509	8-759-066-55	s	IC TA75W393FU
IC512	8-759-684-72	s	IC M24C64-WMN6T(A)
IC601	8-759-058-58	s	IC TC7S04FU-TE85R
IC602	8-759-494-88	s	IC TC75S56F(TE85R)
IC603	8-759-082-61	s	IC TC4W53FU
IC604	8-752-086-33	s	IC CXA2101AQ-TL
IC605	8-759-472-35	s	IC 74VHC221AMTCX
IC606	8-759-344-12	s	IC GS4981CTA
IC607	8-759-082-61	s	IC TC4W53FU
IC608	8-759-257-96	s	IC TC7S14FU (TE85R)
IC609	8-759-277-63	s	IC TC7W14FU (TE12R)
IC701	8-759-300-71	s	IC HD14053BFP
J401	1-770-053-11	s	TERMINAL BLOCK, S (FRONT)
L401	1-412-363-11	s	FERRITE, EMI (SMD)
L402	1-412-363-11	s	FERRITE, EMI (SMD)
L403	1-412-363-11	s	FERRITE, EMI (SMD)
L404	1-412-363-11	s	FERRITE, EMI (SMD)
L405	1-412-363-11	s	FERRITE, EMI (SMD)
L406	1-412-363-11	s	FERRITE, EMI (SMD)
L407	1-412-058-11	s	INDUCTOR,SMALL TYPE 10UH
L408	1-412-058-11	s	INDUCTOR,SMALL TYPE 10UH
L409	1-412-058-11	s	INDUCTOR,SMALL TYPE 10UH
L410	1-412-058-11	s	INDUCTOR,SMALL TYPE 10UH
L411	1-412-058-11	s	INDUCTOR,SMALL TYPE 10UH
L501	1-409-529-41	s	COIL, CHOKE 10UH
L502	1-409-529-41	s	COIL, CHOKE 10UH
L503	1-409-529-41	s	COIL, CHOKE 10UH
L504	1-412-058-11	s	INDUCTOR,SMALL TYPE 10UH
L505	1-412-058-11	s	INDUCTOR,SMALL TYPE 10UH
L601	1-412-058-11	s	INDUCTOR,SMALL TYPE 10UH

(Q BOARD)

Ref. No. or Q'ty	Part No.	SP	Description
L602	1-412-058-11	s	INDUCTOR,SMALL TYPE 10UH
L603	1-412-058-11	s	INDUCTOR,SMALL TYPE 10UH
L604	1-412-058-11	s	INDUCTOR,SMALL TYPE 10UH
L701	1-412-363-11	s	FERRITE, EMI (SMD)
L702	1-412-363-11	s	FERRITE, EMI (SMD)
L703	1-412-363-11	s	FERRITE, EMI (SMD)
L704	1-412-363-11	s	FERRITE, EMI (SMD)
L705	1-414-753-91	s	INDUCTOR 4.7UH
Q401	8-729-140-63	s	TRANSISTOR 2SA1611-M5M6
Q402	8-729-230-49	s	TRANSISTOR 2SC2712-YG
Q403	8-729-230-49	s	TRANSISTOR 2SC2712-YG
Q404	8-729-230-49	s	TRANSISTOR 2SC2712-YG
Q501	1-801-806-11	s	TRANSISTOR DTC144EKA
Q502	8-729-216-22	s	TRANSISTOR 2SA1162-G
Q505	8-729-230-49	s	TRANSISTOR 2SC2712-YG
Q510	8-729-013-28	s	TRANSISTOR HN1B01FU-TE85R
Q511	8-729-013-28	s	TRANSISTOR HN1B01FU-TE85R
Q512	8-729-013-28	s	TRANSISTOR HN1B01FU-TE85R
Q513	1-801-806-11	s	TRANSISTOR DTC144EKA
Q601	8-729-230-49	s	TRANSISTOR 2SC2712-YG
Q602	8-729-230-49	s	TRANSISTOR 2SC2712-YG
Q603	8-729-216-22	s	TRANSISTOR 2SA1162-G
Q604	8-729-427-72	s	TRANSISTOR XP4501-TXE
Q605	8-729-427-72	s	TRANSISTOR XP4501-TXE
Q606	8-729-427-72	s	TRANSISTOR XP4501-TXE
Q607	1-801-806-11	s	TRANSISTOR DTC144EKA
Q701	1-801-806-11	s	TRANSISTOR DTC144EKA
R403	1-216-624-11	s	RESISTOR,CHIP 75 1/10W(2012)
R404	1-216-624-11	s	RESISTOR,CHIP 75 1/10W(2012)
R405	1-216-803-11	s	RESISTOR,CHIP 33 1/16W (1608)
R406	1-216-624-11	s	RESISTOR,CHIP 75 1/10W(2012)
R407	1-216-821-11	s	RESISTOR,CHIP 1.0K 1/16W(1608)
R408	1-216-818-11	s	RESISTOR, CHIP 560 1/16W 1608
R409	1-216-625-11	s	RESISTOR,CHIP 82 1/10W
R410	1-216-625-11	s	RESISTOR,CHIP 82 1/10W
R411	1-216-625-11	s	RESISTOR,CHIP 82 1/10W
R412	1-216-805-11	s	RESISTOR,CHIP 47 1/16W 1608
R413	1-216-805-11	s	RESISTOR,CHIP 47 1/16W 1608
R414	1-216-624-11	s	RESISTOR,CHIP 75 1/10W(2012)
R415	1-216-624-11	s	RESISTOR,CHIP 75 1/10W(2012)
R416	1-216-813-11	s	RESISTOR, CHIP 220 1/16W 1608
R417	1-216-624-11	s	RESISTOR,CHIP 75 1/10W(2012)
R418	1-216-835-11	s	RESISTOR,CHIP 15K 1/16W
R419	1-216-835-11	s	RESISTOR,CHIP 15K 1/16W
R423	1-216-841-11	s	RESISTOR, CHIP 47K 1/16W 1608
R424	1-216-845-11	s	RESISTOR,CHIP 100K 1/16W(1608)
R425	1-216-805-11	s	RESISTOR,CHIP 47 1/16W 1608
R426	1-216-805-11	s	RESISTOR,CHIP 47 1/16W 1608
R427	1-216-805-11	s	RESISTOR,CHIP 47 1/16W 1608
R428	1-216-805-11	s	RESISTOR,CHIP 47 1/16W 1608
R429	1-216-805-11	s	RESISTOR,CHIP 47 1/16W 1608
R430	1-216-805-11	s	RESISTOR,CHIP 47 1/16W 1608
R431	1-216-841-11	s	RESISTOR, CHIP 47K 1/16W 1608
R432	1-216-841-11	s	RESISTOR, CHIP 47K 1/16W 1608
R433	1-216-841-11	s	RESISTOR, CHIP 47K 1/16W 1608
R434	1-216-841-11	s	RESISTOR, CHIP 47K 1/16W 1608
R435	1-216-805-11	s	RESISTOR,CHIP 47 1/16W 1608
R436	1-216-805-11	s	RESISTOR,CHIP 47 1/16W 1608

(Q BOARD)

Ref. No. or Q'ty	Part No.	SP	Description
R437	1-216-841-11	s	RESISTOR, CHIP 47K 1/16W 1608
R438	1-216-841-11	s	RESISTOR, CHIP 47K 1/16W 1608
R439	1-216-805-11	s	RESISTOR,CHIP 47 1/16W 1608
R440	1-216-821-11	s	RESISTOR,CHIP 1.0K 1/16W(1608)
R441	1-216-821-11	s	RESISTOR,CHIP 1.0K 1/16W(1608)
R442	1-216-821-11	s	RESISTOR,CHIP 1.0K 1/16W(1608)
R443	1-218-688-11	s	RESISTOR,CHIP 680 1/16W(1608)
R444	1-218-688-11	s	RESISTOR,CHIP 680 1/16W(1608)
R445	1-218-688-11	s	RESISTOR,CHIP 680 1/16W(1608)
R447	1-216-813-11	s	RESISTOR, CHIP 220 1/16W 1608
R448	1-216-864-11	s	CONDUCTOR, CHIP (1608)
R449	1-216-864-11	s	CONDUCTOR, CHIP (1608)
R450	1-216-864-11	s	CONDUCTOR, CHIP (1608)
R458	1-216-815-11	s	RESISTOR,CHIP 330 1/16W 1608
R459	1-216-815-11	s	RESISTOR,CHIP 330 1/16W 1608
R460	1-216-815-11	s	RESISTOR,CHIP 330 1/16W 1608
R461	1-216-829-11	s	RESISTOR,CHIP 4.7K 1/16W(1608)
R462	1-216-815-11	s	RESISTOR,CHIP 330 1/16W 1608
R463	1-216-842-11	s	RESISTOR,CHIP 56K 1/16W(1608)
R464	1-216-815-11	s	RESISTOR,CHIP 330 1/16W 1608
R465	1-216-815-11	s	RESISTOR,CHIP 330 1/16W 1608
R466	1-216-624-11	s	RESISTOR,CHIP 75 1/10W(2012)
R467	1-216-624-11	s	RESISTOR,CHIP 75 1/10W(2012)
R468	1-216-624-11	s	RESISTOR,CHIP 75 1/10W(2012)
R470	1-216-864-11	s	CONDUCTOR, CHIP (1608)
R471	1-218-731-11	s	RESISTOR,METAL 43K 1/16
R472	1-218-707-11	s	RESISTOR,CHIP 4.3K 1/16W(1608)
R473	1-216-833-11	s	RESISTOR,CHIP 10K 1/16W (1608)
R474	1-216-809-11	s	RESISTOR,CHIP 100 1/16W 1608
R475	1-216-809-11	s	RESISTOR,CHIP 100 1/16W 1608
R476	1-216-833-11	s	RESISTOR,CHIP 10K 1/16W (1608)
R477	1-216-833-11	s	RESISTOR,CHIP 10K 1/16W (1608)
R478	1-216-809-11	s	RESISTOR,CHIP 100 1/16W 1608
R480	1-218-684-11	s	RESISTOR,CHIP 470 1/16W (1608)
R481	1-216-809-11	s	RESISTOR,CHIP 100 1/16W 1608
R482	1-216-833-11	s	RESISTOR,CHIP 10K 1/16W (1608)
R483	1-218-670-11	s	RESISTOR,CHIP 120 1/16W (1608)
R484	1-216-809-11	s	RESISTOR,CHIP 100 1/16W 1608
R485	1-216-833-11	s	RESISTOR,CHIP 10K 1/16W (1608)
R486	1-218-706-11	s	RESISTOR,CHIP 3.9K 1/16W(1608)
R487	1-216-809-11	s	RESISTOR,CHIP 100 1/16W 1608
R488	1-216-833-11	s	RESISTOR,CHIP 10K 1/16W (1608)
R489	1-216-833-11	s	RESISTOR,CHIP 10K 1/16W (1608)
R490	1-218-704-11	s	RESISTOR,CHIP 3.3K 1/16W(1608)
R491	1-216-809-11	s	RESISTOR,CHIP 100 1/16W 1608
R492	1-216-809-11	s	RESISTOR,CHIP 100 1/16W 1608
R493	1-216-809-11	s	RESISTOR,CHIP 100 1/16W 1608
R494	1-216-809-11	s	RESISTOR,CHIP 100 1/16W 1608
R496	1-216-809-11	s	RESISTOR,CHIP 100 1/16W 1608
R497	1-216-809-11	s	RESISTOR,CHIP 100 1/16W 1608
R498	1-216-809-11	s	RESISTOR,CHIP 100 1/16W 1608
R499	1-216-805-11	s	RESISTOR,CHIP 47 1/16W 1608
R502	1-216-833-11	s	RESISTOR,CHIP 10K 1/16W (1608)
R503	1-216-833-11	s	RESISTOR,CHIP 10K 1/16W (1608)
R504	1-216-821-11	s	RESISTOR,CHIP 1.0K 1/16W(1608)
R505	1-216-833-11	s	RESISTOR,CHIP 10K 1/16W (1608)
R506	1-216-844-11	s	RESISTOR,CHIP 82K 1/16W 1608
R507	1-216-833-11	s	RESISTOR,CHIP 10K 1/16W (1608)
R508	1-216-809-11	s	RESISTOR,CHIP 100 1/16W 1608

(Q BOARD)

Ref. No. or Q'ty	Part No.	SP	Description
R509	1-216-845-11	s	RESISTOR,CHIP 100K 1/16W(1608)
R510	1-216-839-11	s	RESISTOR,CHIP 33K 1/16W 1608
R511	1-216-833-11	s	RESISTOR,CHIP 10K 1/16W (1608)
R512	1-216-833-11	s	RESISTOR,CHIP 10K 1/16W (1608)
R513	1-216-821-11	s	RESISTOR,CHIP 1.0K 1/16W(1608)
R515	1-216-821-11	s	RESISTOR,CHIP 1.0K 1/16W(1608)
R517	1-216-805-11	s	RESISTOR,CHIP 47 1/16W 1608
R518	1-216-845-11	s	RESISTOR,CHIP 100K 1/16W(1608)
R519	1-216-839-11	s	RESISTOR,CHIP 33K 1/16W 1608
R520	1-216-845-11	s	RESISTOR,CHIP 100K 1/16W(1608)
R521	1-218-767-11	s	RESISTOR,CHIP 430K 1/10W(2012)
R522	1-216-839-11	s	RESISTOR,CHIP 33K 1/16W 1608
R524	1-216-805-11	s	RESISTOR,CHIP 47 1/16W 1608
R528	1-216-833-11	s	RESISTOR,CHIP 10K 1/16W (1608)
R529	1-216-833-11	s	RESISTOR,CHIP 10K 1/16W (1608)
R530	1-216-809-11	s	RESISTOR,CHIP 100 1/16W 1608
R532	1-216-817-11	s	RESISTOR,CHIP 470 1/16W 1608
R541	1-216-841-11	s	RESISTOR, CHIP 47K 1/16W 1608
R542	1-216-821-11	s	RESISTOR,CHIP 1.0K 1/16W(1608)
R544	1-216-805-11	s	RESISTOR,CHIP 47 1/16W 1608
R545	1-216-805-11	s	RESISTOR,CHIP 47 1/16W 1608
R546	1-216-809-11	s	RESISTOR,CHIP 100 1/16W 1608
R547	1-216-809-11	s	RESISTOR,CHIP 100 1/16W 1608
R549	1-216-817-11	s	RESISTOR,CHIP 470 1/16W 1608
R550	1-216-821-11	s	RESISTOR,CHIP 1.0K 1/16W(1608)
R551	1-216-821-11	s	RESISTOR,CHIP 1.0K 1/16W(1608)
R552	1-216-817-11	s	RESISTOR,CHIP 470 1/16W 1608
R553	1-216-821-11	s	RESISTOR,CHIP 1.0K 1/16W(1608)
R554	1-216-821-11	s	RESISTOR,CHIP 1.0K 1/16W(1608)
R555	1-216-833-11	s	RESISTOR,CHIP 10K 1/16W (1608)
R556	1-216-844-11	s	RESISTOR,CHIP 82K 1/16W 1608
R601	1-216-809-11	s	RESISTOR,CHIP 100 1/16W 1608
R602	1-216-809-11	s	RESISTOR,CHIP 100 1/16W 1608
R603	1-216-809-11	s	RESISTOR,CHIP 100 1/16W 1608
R605	1-216-805-11	s	RESISTOR,CHIP 47 1/16W 1608
R606	1-218-708-11	s	RESISTOR,CHIP 4.7K 1/16W(1608)
R607	1-218-700-11	s	RESISTOR,CHIP 2.2K 1/16W(1608)
R608	1-216-805-11	s	RESISTOR,CHIP 47 1/16W 1608
R609	1-216-805-11	s	RESISTOR,CHIP 47 1/16W 1608
R610	1-216-816-11	s	RESISTOR, CHIP 390 1/16W 1608
R611	1-216-809-11	s	RESISTOR,CHIP 100 1/16W 1608
R612	1-216-816-11	s	RESISTOR, CHIP 390 1/16W 1608
R613	1-216-809-11	s	RESISTOR,CHIP 100 1/16W 1608
R614	1-216-809-11	s	RESISTOR,CHIP 100 1/16W 1608
R615	1-216-809-11	s	RESISTOR,CHIP 100 1/16W 1608
R616	1-216-809-11	s	RESISTOR,CHIP 100 1/16W 1608
R617	1-216-805-11	s	RESISTOR,CHIP 47 1/16W 1608
R618	1-216-797-11	s	RESISTOR,CHIP 10 1/16W 1608
R619	1-216-797-11	s	RESISTOR,CHIP 10 1/16W 1608
R620	1-218-724-11	s	RESISTOR,CHIP 22K 1/16W(1608)
R621	1-216-805-11	s	RESISTOR,CHIP 47 1/16W 1608
R622	1-216-805-11	s	RESISTOR,CHIP 47 1/16W 1608
R623	1-216-805-11	s	RESISTOR,CHIP 47 1/16W 1608
R624	1-218-706-11	s	RESISTOR,CHIP 3.9K 1/16W(1608)
R625	1-216-805-11	s	RESISTOR,CHIP 47 1/16W 1608
R626	1-218-706-11	s	RESISTOR,CHIP 3.9K 1/16W(1608)
R627	1-216-809-11	s	RESISTOR,CHIP 100 1/16W 1608
R628	1-216-809-11	s	RESISTOR,CHIP 100 1/16W 1608
R629	1-216-805-11	s	RESISTOR,CHIP 47 1/16W 1608

(Q BOARD)

Ref. No. or Q'ty	Part No.	SP	Description
R630	1-216-805-11	s	RESISTOR,CHIP 47 1/16W 1608
R631	1-218-690-11	s	RESISTOR,CHIP 820 1/16W (1608)
R632	1-216-805-11	s	RESISTOR,CHIP 47 1/16W 1608
R633	1-216-820-11	s	RESISTOR, CHIP 820 1/16W 1608
R634	1-216-817-11	s	RESISTOR,CHIP 470 1/16W 1608
R635	1-216-863-11	s	RESISTOR,CHIP 3.3M 1/16W 1608
R636	1-216-805-11	s	RESISTOR,CHIP 47 1/16W 1608
R637	1-216-838-11	s	RESISTOR CHIP 27K 1/16W(1608)
R638	1-218-750-11	s	RESISTOR,CHIP 270K 1/16W(1608)
R640	1-216-841-11	s	RESISTOR, CHIP 47K 1/16W 1608
R641	1-216-829-11	s	RESISTOR,CHIP 4.7K 1/16W(1608)
R644	1-216-805-11	s	RESISTOR,CHIP 47 1/16W 1608
R645	1-216-805-11	s	RESISTOR,CHIP 47 1/16W 1608
R646	1-218-732-11	s	RESISTOR,CHIP 47K 1/16W(1608)
R648	1-216-805-11	s	RESISTOR,CHIP 47 1/16W 1608
R649	1-216-805-11	s	RESISTOR,CHIP 47 1/16W 1608
R650	1-216-805-11	s	RESISTOR,CHIP 47 1/16W 1608
R651	1-216-825-11	s	RESISTOR,CHIP 2.2K 1/16W 1608
R652	1-216-825-11	s	RESISTOR,CHIP 2.2K 1/16W 1608
R653	1-216-805-11	s	RESISTOR,CHIP 47 1/16W 1608
R654	1-216-805-11	s	RESISTOR,CHIP 47 1/16W 1608
R655	1-216-805-11	s	RESISTOR,CHIP 47 1/16W 1608
R656	1-216-805-11	s	RESISTOR,CHIP 47 1/16W 1608
R657	1-216-805-11	s	RESISTOR,CHIP 47 1/16W 1608
R658	1-216-817-11	s	RESISTOR,CHIP 470 1/16W 1608
R662	1-216-805-11	s	RESISTOR,CHIP 47 1/16W 1608
R663	1-216-817-11	s	RESISTOR,CHIP 470 1/16W 1608
R667	1-216-805-11	s	RESISTOR,CHIP 47 1/16W 1608
R668	1-216-805-11	s	RESISTOR,CHIP 47 1/16W 1608
R670	1-216-805-11	s	RESISTOR,CHIP 47 1/16W 1608
R671	1-216-817-11	s	RESISTOR,CHIP 470 1/16W 1608
R672	1-216-833-11	s	RESISTOR,CHIP 10K 1/16W (1608)
R674	1-218-708-11	s	RESISTOR,CHIP 4.7K 1/16W(1608)
R682	1-216-809-11	s	RESISTOR,CHIP 100 1/16W 1608
R683	1-216-805-11	s	RESISTOR,CHIP 47 1/16W 1608
R685	1-218-710-11	s	RESISTOR,CHIP 5.6K 1/16W(1608)
R686	1-218-708-11	s	RESISTOR,CHIP 4.7K 1/16W(1608)
R687	1-218-716-11	s	RESISTOR,CHIP 10K 1/16W(1608)
R688	1-218-704-11	s	RESISTOR,CHIP 3.3K 1/16W(1608)
R701	1-216-853-11	s	RESISTOR,CHIP 470K 1/16W(1608)
R702	1-216-853-11	s	RESISTOR,CHIP 470K 1/16W(1608)
R703	1-216-853-11	s	RESISTOR,CHIP 470K 1/16W(1608)
R704	1-216-853-11	s	RESISTOR,CHIP 470K 1/16W(1608)
R705	1-216-809-11	s	RESISTOR,CHIP 100 1/16W 1608
R706	1-216-809-11	s	RESISTOR,CHIP 100 1/16W 1608
R707	1-216-809-11	s	RESISTOR,CHIP 100 1/16W 1608
R708	1-216-809-11	s	RESISTOR,CHIP 100 1/16W 1608
R709	1-216-845-11	s	RESISTOR,CHIP 100K 1/16W(1608)
R710	1-216-845-11	s	RESISTOR,CHIP 100K 1/16W(1608)
R711	1-216-845-11	s	RESISTOR,CHIP 100K 1/16W(1608)
R712	1-216-845-11	s	RESISTOR,CHIP 100K 1/16W(1608)
R713	1-216-845-11	s	RESISTOR,CHIP 100K 1/16W(1608)
R714	1-216-845-11	s	RESISTOR,CHIP 100K 1/16W(1608)
R715	1-216-845-11	s	RESISTOR,CHIP 100K 1/16W(1608)
R716	1-216-845-11	s	RESISTOR,CHIP 100K 1/16W(1608)
R717	1-216-841-11	s	RESISTOR, CHIP 47K 1/16W 1608
R718	1-216-864-11	s	CONDUCTOR, CHIP (1608)
R719	1-216-864-11	s	CONDUCTOR, CHIP (1608)

(Q BOARD)

Ref. No. or Q'ty	Part No.	SP	Description
S601	1-762-984-11	s	SWITCH, PUSH
S602	1-762-984-11	s	SWITCH, PUSH
TH401	1-809-020-11	s	THERMISTOR
TP404	1-535-757-11	s	CHIP, CHECKER (CONNECTOR)
TP505	1-535-757-11	s	CHIP, CHECKER (CONNECTOR)
TP506	1-535-757-11	s	CHIP, CHECKER (CONNECTOR)
TP507	1-535-757-11	s	CHIP, CHECKER (CONNECTOR)
TP508	1-535-757-11	s	CHIP, CHECKER (CONNECTOR)
TP509	1-535-757-11	s	CHIP, CHECKER (CONNECTOR)
TP510	1-535-757-11	s	CHIP, CHECKER (CONNECTOR)
TP606	1-535-757-11	s	CHIP, CHECKER (CONNECTOR)
TP607	1-535-757-11	s	CHIP, CHECKER (CONNECTOR)
TP701	1-535-757-11	s	CHIP, CHECKER (CONNECTOR)
TP702	1-535-757-11	s	CHIP, CHECKER (CONNECTOR)
TP703	1-535-757-11	s	CHIP, CHECKER (CONNECTOR)

5-4. Paking Materials

```
--------------------------------------
PAKING MATERIALS & SUPPLYED ACCESSORTES
--------------------------------------
Ref. No.
or Q'ty  Part No.    SP Description

1pc      1-476-957-11 s REMOTE COMMANDER(RM-PJHS1)
1pc      9-885-014-94 s BATTRY COVER(FOR RM-PJHS1)
1pc      1-500-386-21 s FILTER, CLAMP (FERRITE CORE)
1pc      1-751-271-12 s CORD, CONNECTION(VPL-HS1FP ONLY)
1pc      4-083-098-01 s INSTRUCTION

1pc      4-085-330-01 o OPERATING INSTRUCTION
                          (JAPANESE, SIMPLIFIED CHINESE)
1pc      4-085-330-11 o OPERATING INSTRUCTION
                          (ENGLISH, FRENCH, SPANISH)
1pc      4-085-330-21 o OPERATING INSTRUCTION
                          (GERMAN, ITALIAN)
1pc      X-4039-446-1 s CAP ASSY, LENS
1pc    ⚠               CORD, POWER
                       (See Sec.2-3.Power Cord)
```

5-5. IFU-HS1

```
1pc      1-786-281-11 s SWITCH BLOCK
1pc      1-823-499-11 s CORD WITH CONNECTOR(AV MULTI)
1pc      4-085-602-02 o MANUAL, INSTRUCTION
                            (JAPANESE, SIMPLIFIED CHINESE,
                 ENGLISH, FRENCH, SPANISH, GERMAN, ITALIAN)
```

5-6. SU-HS1

```
1pc      4-085-351-01 o MANUAL, INSTRUCTION
                            (JAPANESE, SIMPLIFIED CHINESE,
                 ENGLISH, FRENCH, SPANISH, GERMAN, ITALIAN)
```

Section 6
Block Diagrams

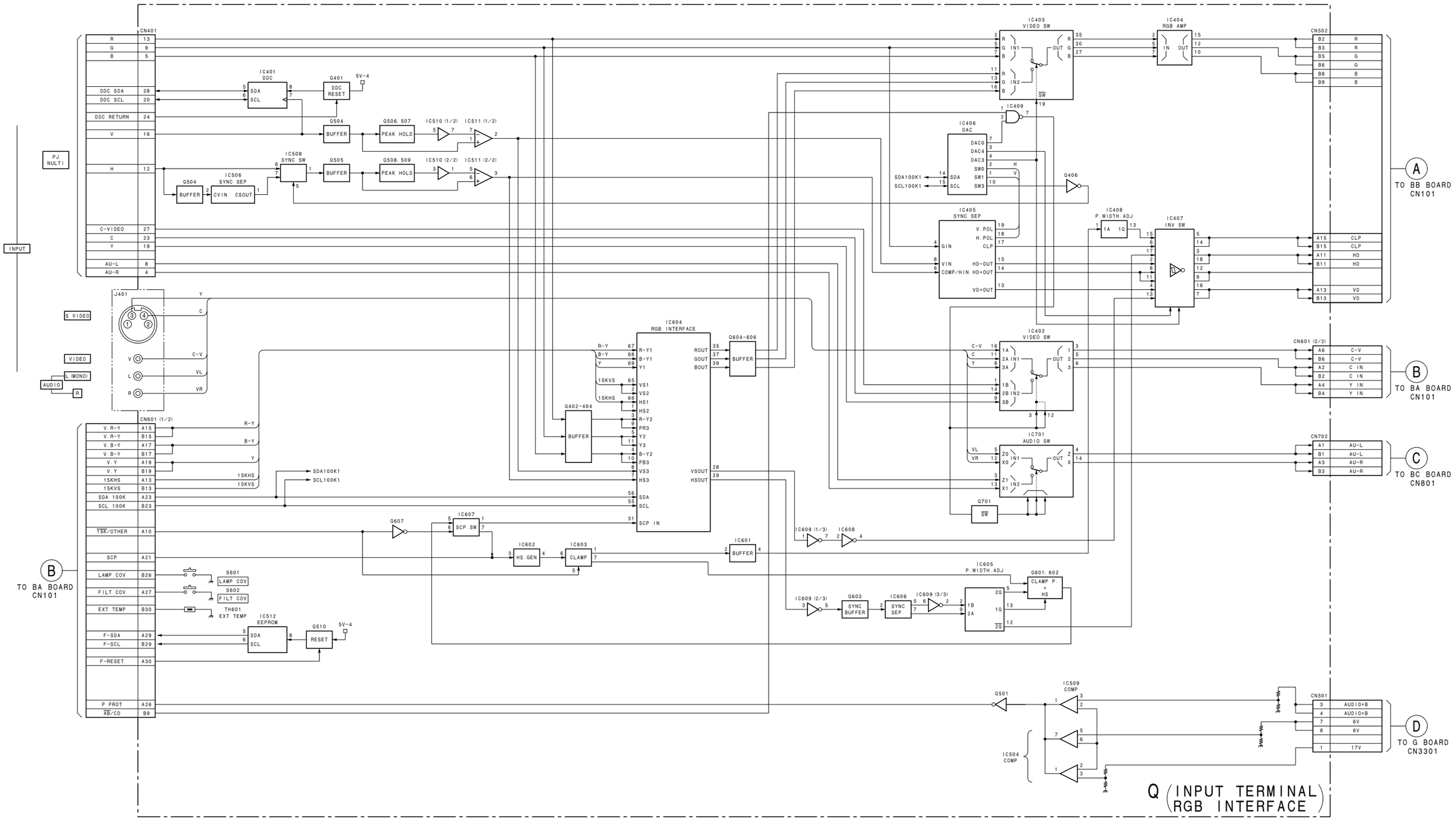

Q B0ARD

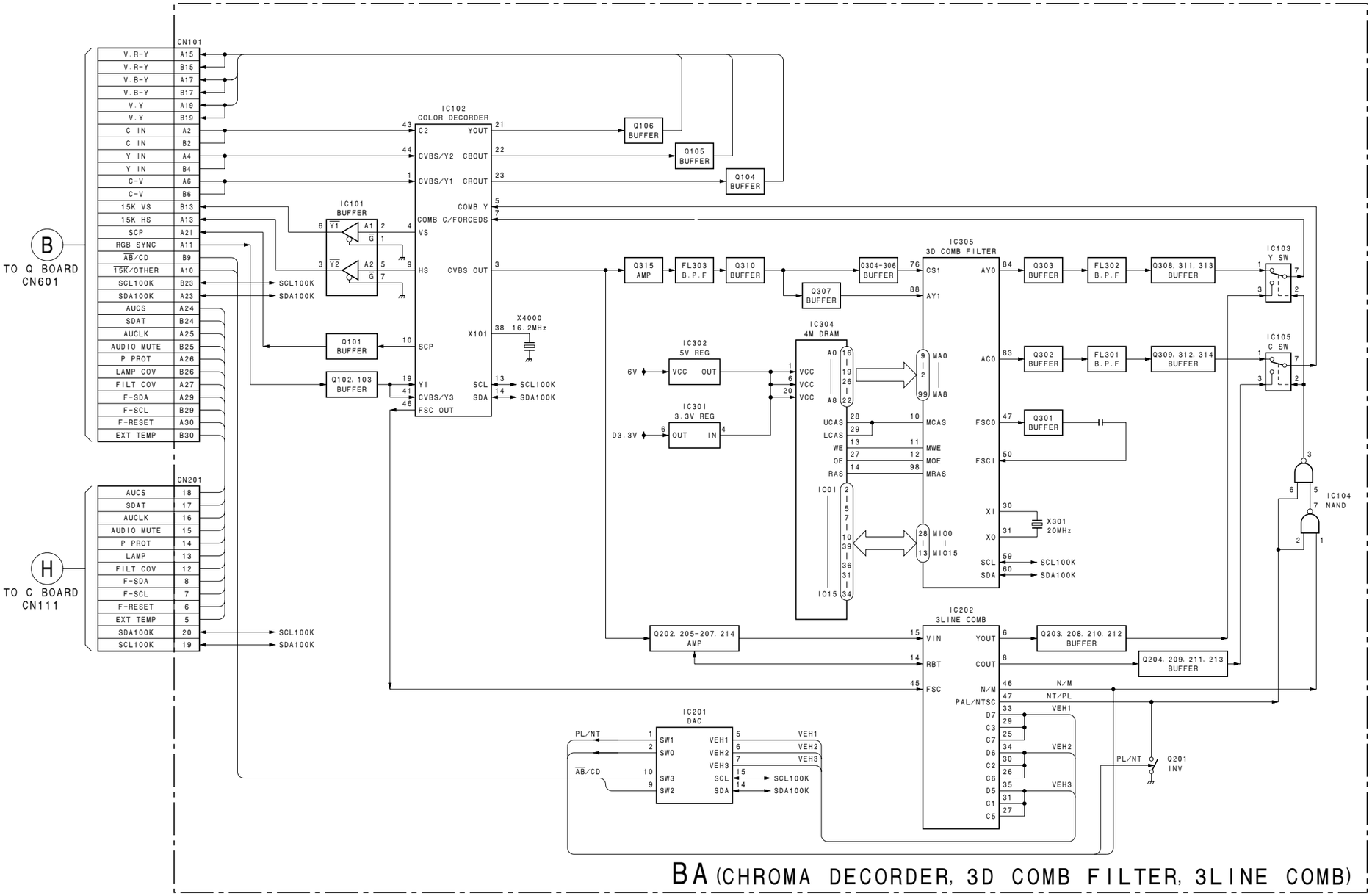

BA (CHROMA DECORDER, 3D COMB FILTER, 3LINE COMB)

BA Block

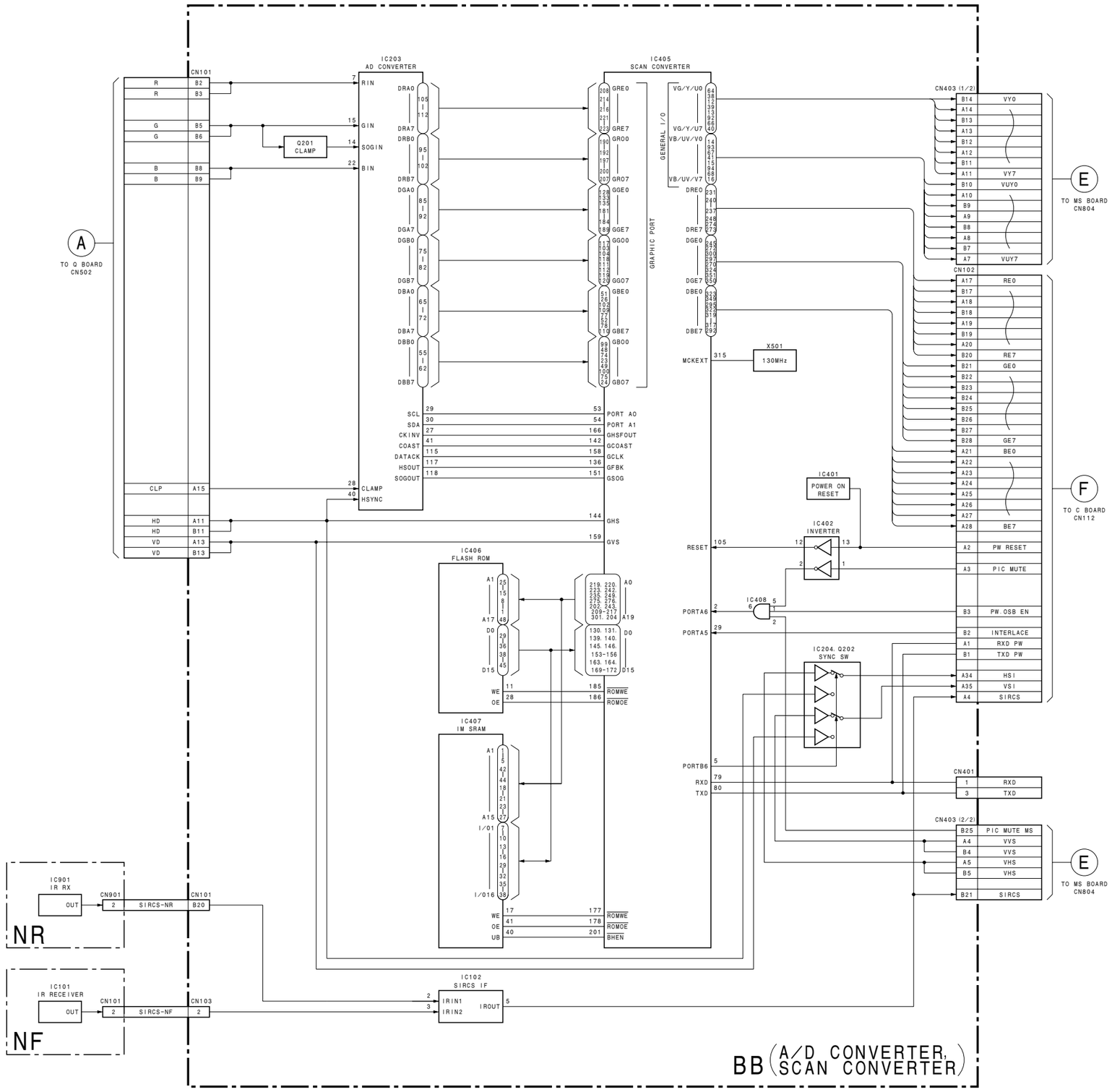
IC203
AD CONVERTER
IC405
SCAN CONVERTER
CN101
CN403 (1/2)
CN102
CN401
CN403 (2/2)
Q201
CLAMP
GRAPHIC PORT
GENERAL I/O
X501
130MHz
IC401
POWER ON
RESET
IC402
INVERTER
IC408
IC204, Q202
SYNC SW
IC406
FLASH ROM
IC407
IM SRAM
IC901
IR RX
IC101
IR RECEIVER
IC102
SIRCS IF
TO Q BOARD
CN502
TO MS BOARD
CN804
TO C BOARD
CN112
NR
NF
BB (A/D CONVERTER, SCAN CONVERTER)

BB Block

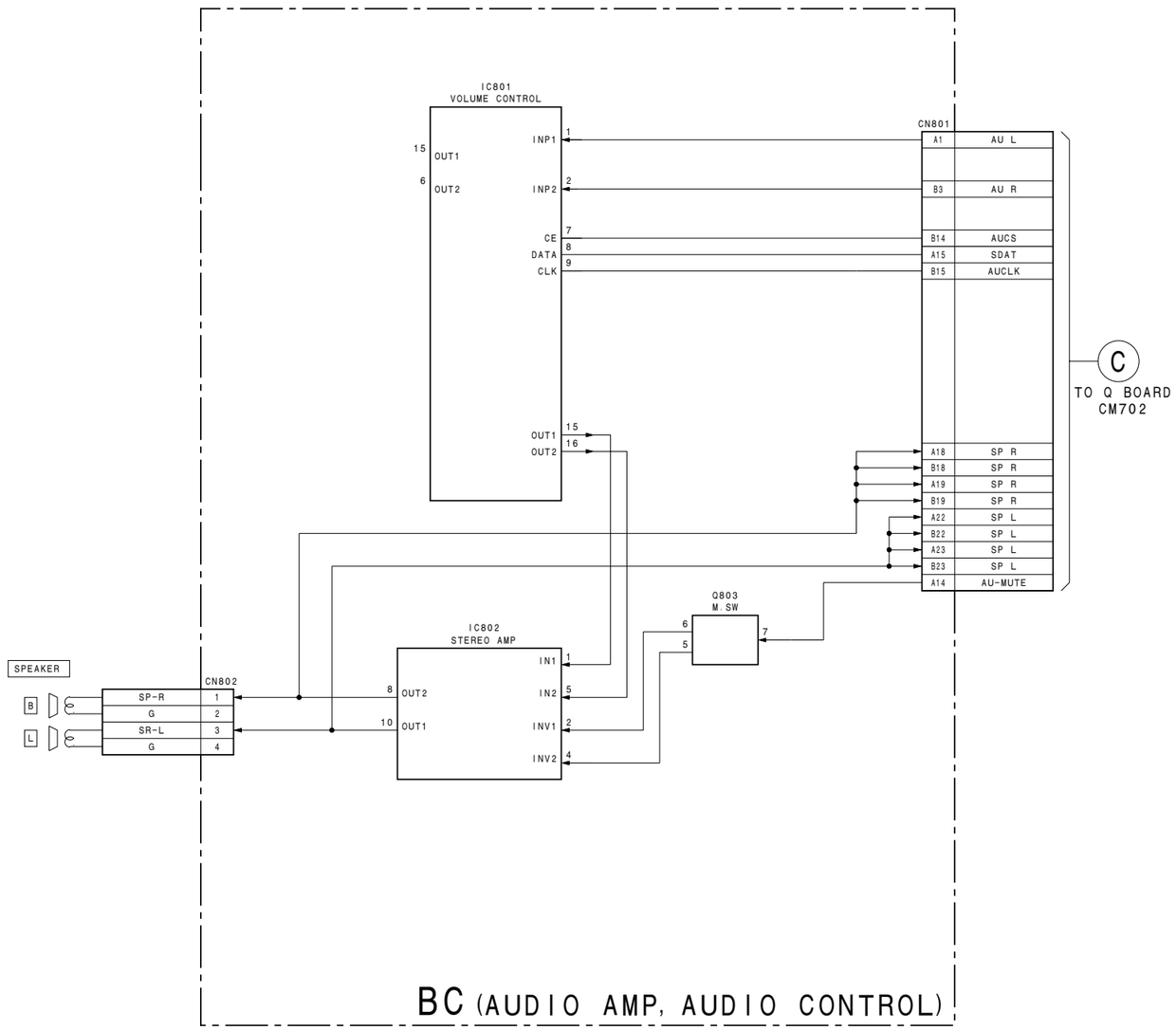

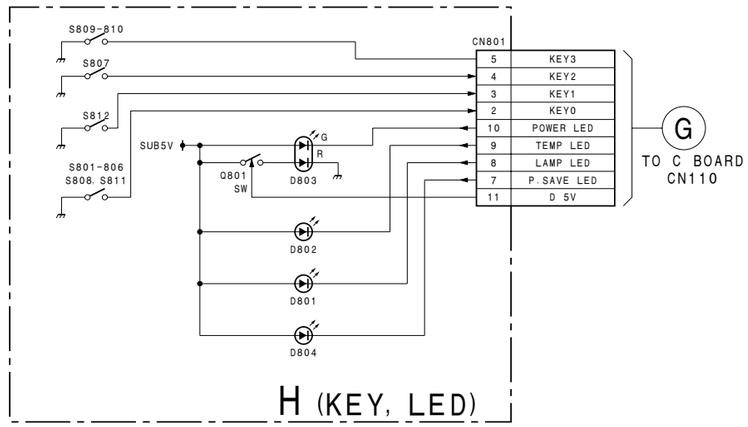

BC AND H Blocks

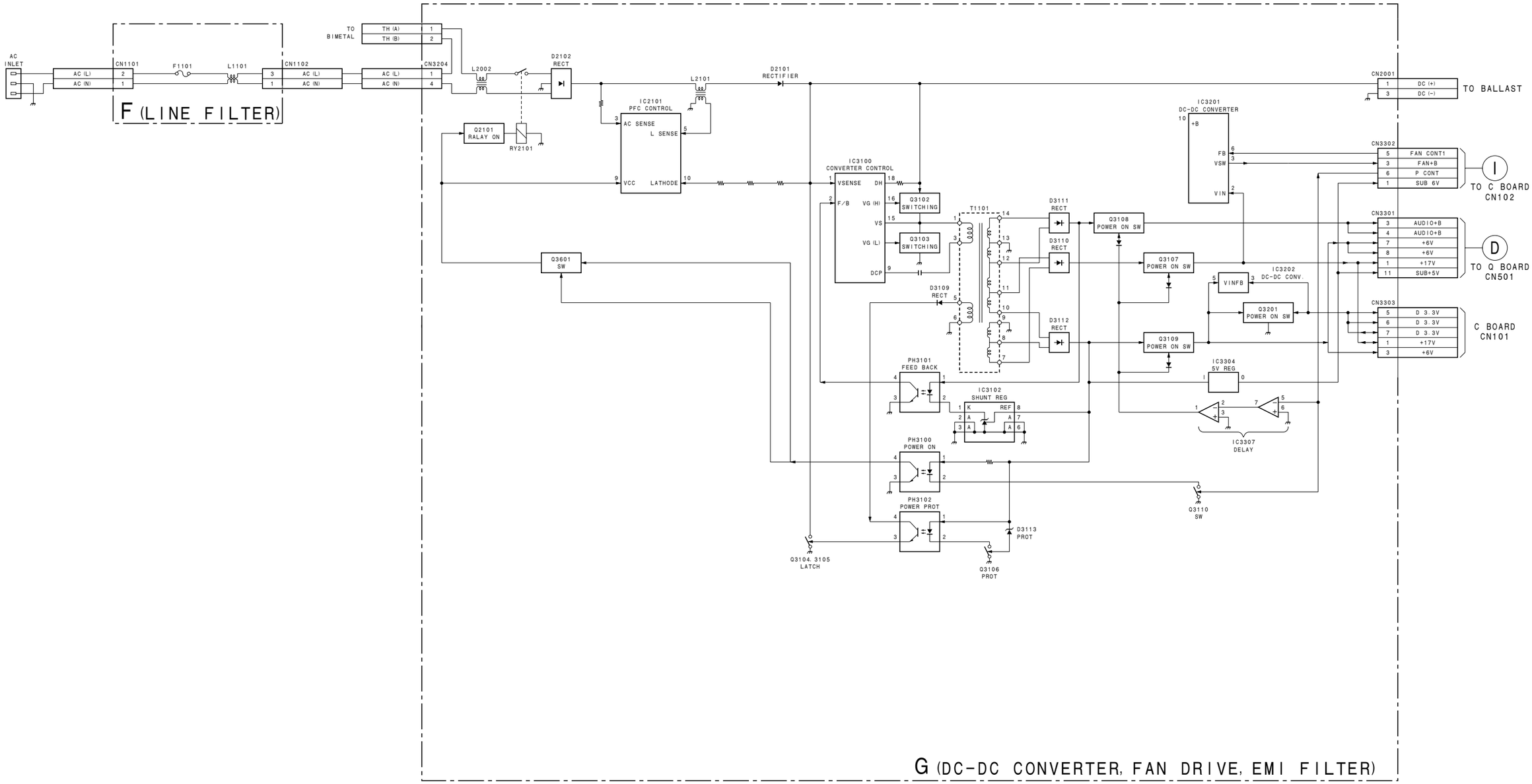
AC INLET
AC (L)
AC (N)
CN1101
F1101
L1101
CN1102
F (LINE FILTER)
TO BIMETAL
TH (A)
TH (B)
CN3204
L2002
D2102 RECT
Q2101 RALAY ON
RY2101
IC2101 PFC CONTROL
AC SENSE
L SENSE
VCC
LATHODE
L2101
D2101 RECTIFIER
IC3100 CONVERTER CONTROL
VSENSE
F/B
DH
VG (H)
VS
VG (L)
DCP
Q3102 SWITCHING
Q3103 SWITCHING
T1101
D3109 RECT
D3111 RECT
D3110 RECT
D3112 RECT
Q3108 POWER ON SW
Q3107 POWER ON SW
Q3109 POWER ON SW
Q3601 SW
PH3101 FEED BACK
IC3102 SHUNT REG
REF
PH3100 POWER ON
PH3102 POWER PROT
D3113 PROT
Q3104, 3105 LATCH
Q3106 PROT
Q3110 SW
IC3201 DC-DC CONVERTER
+B
FB
VSW
VIN
IC3202 DC-DC CONV.
VINFB
Q3201 POWER ON SW
IC3304 5V REG
IC3307 DELAY
CN2001
DC (+)
DC (-)
TO BALLAST
CN3302
FAN CONT1
FAN+B
P CONT
SUB 6V
I
TO C BOARD CN102
CN3301
AUDIO+B
AUDIO+B
+6V
+6V
+17V
SUB+5V
D
TO Q BOARD CN501
CN3303
D 3.3V
D 3.3V
D 3.3V
+17V
+6V
C BOARD CN101
G (DC-DC CONVERTER, FAN DRIVE, EMI FILTER)

G Block

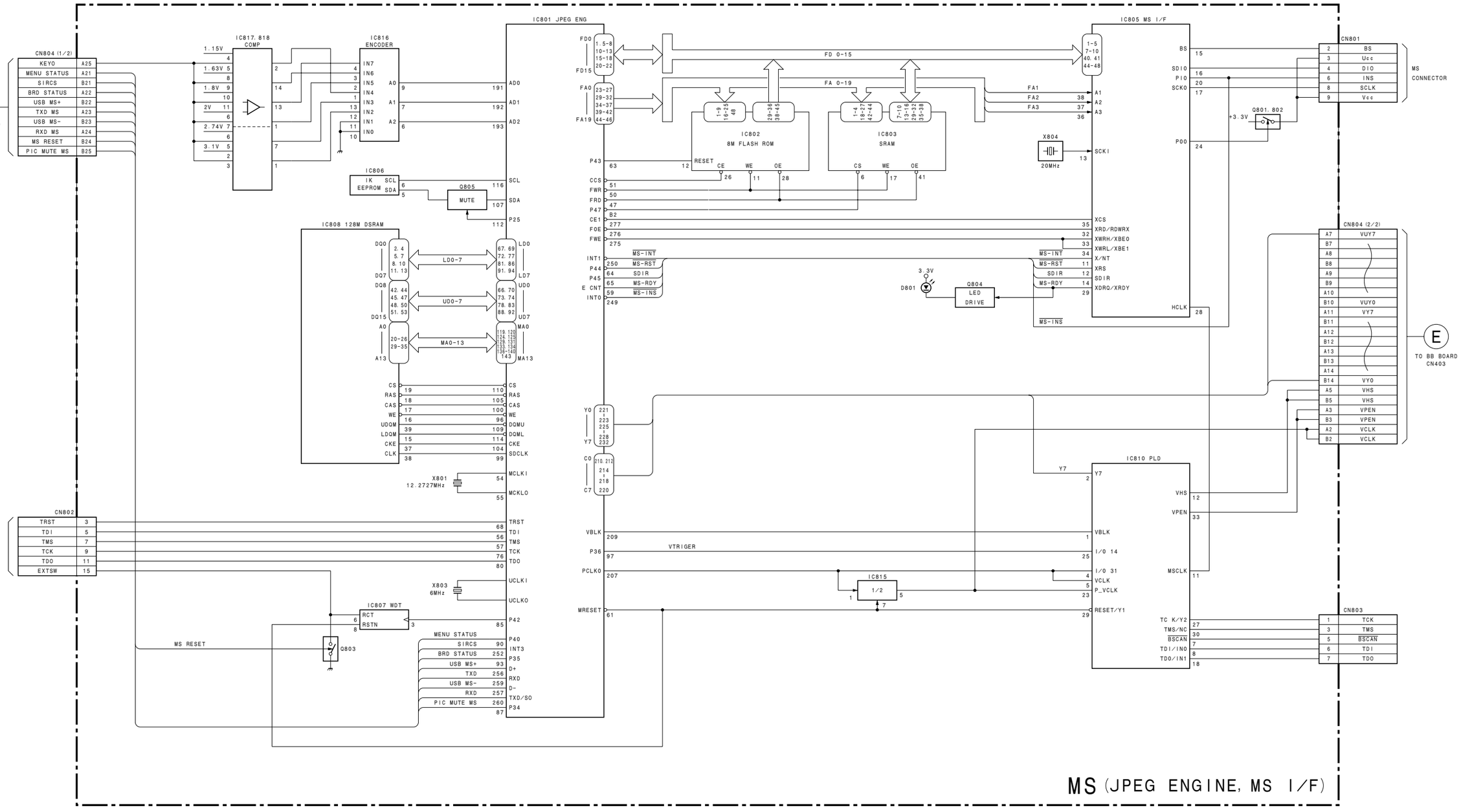
CN804 (1/2)
KEYO A25
MENU STATUS A21
SIRCS B21
BRD STATUS A22
USB MS+ B22
TXD MS A23
USB MS- B23
RXD MS A24
MS RESET B24
PIC MUTE MS B25
TO BB BOARD CN403
IC817, 818 COMP
IC816 ENCODER
IC806 EEPROM
Q805 MUTE
IC801 JPEG ENG
IC808 128M DSRAM
X801 12.2727MHz
CN802
TRST
TDI
TMS
TCK
TDO
EXTSW
X803 6MHz
IC807 WDT
Q803
MS RESET
MENU STATUS
SIRCS
BRD STATUS
USB MS+
TXD
USB MS-
RXD
PIC MUTE MS
IC802 8M FLASH ROM
IC803 SRAM
X804 20MHz
IC805 MS I/F
CN801
MS CONNECTOR
Q801, 802
D801
Q804 LED DRIVE
CN804 (2/2)
TO BB BOARD CN403
IC810 PLD
IC815 1/2
CN803
MS (JPEG ENGINE, MS I/F)

MS Block

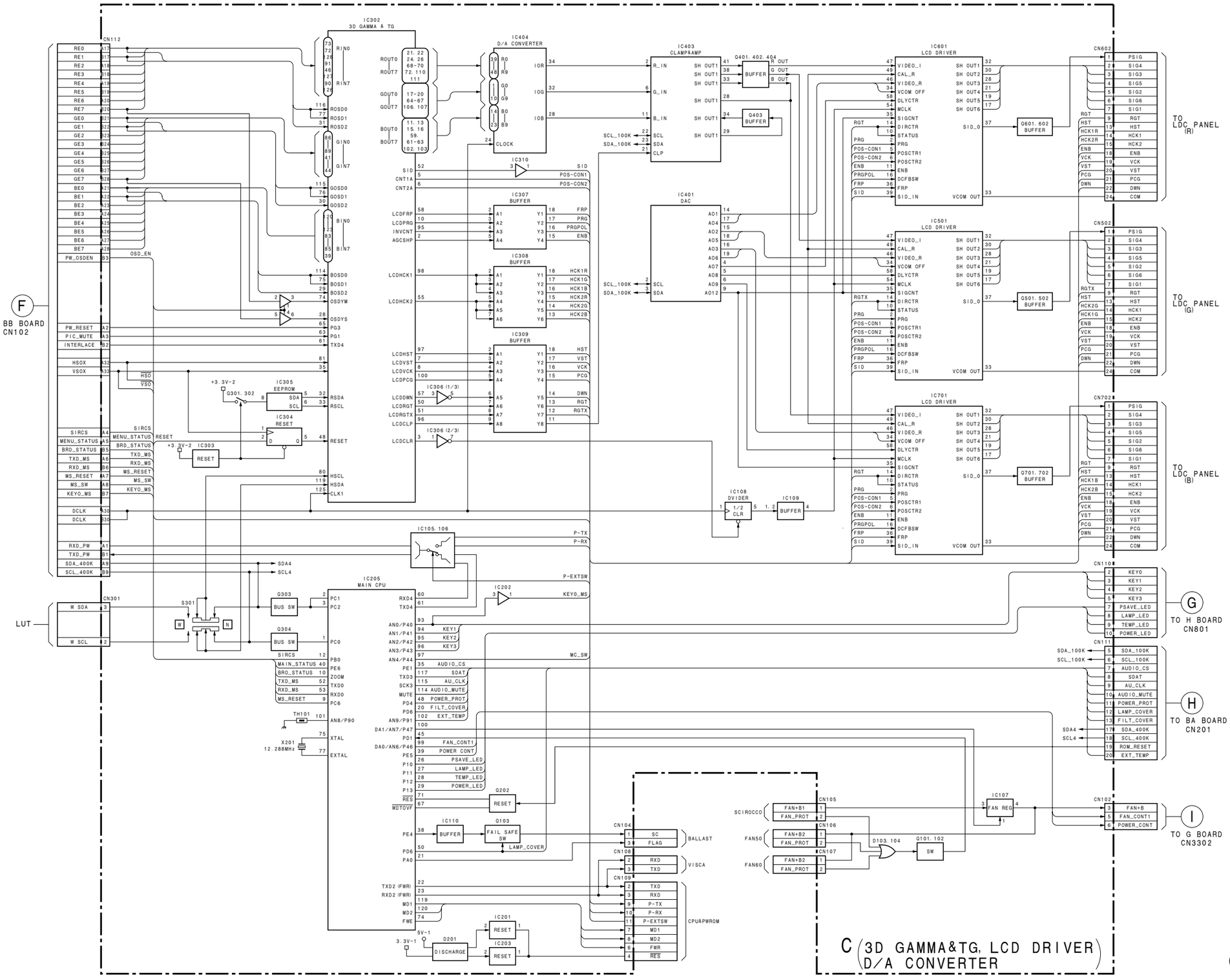
IC302
3D GAMMA & TG
IC404
D/A CONVERTER
IC403
CLAMP&AMP
Q401, 402, 404
BUFFER
Q403
BUFFER
IC601
LCD DRIVER
IC501
LCD DRIVER
IC701
LCD DRIVER
Q601, 602
BUFFER
Q501, 502
BUFFER
Q701, 702
BUFFER
CN602
CN502
CN702
TO
LDC PANEL
(R)
TO
LDC PANEL
(G)
TO
LDC PANEL
(B)
CN112
TO BB BOARD
CN102
IC401
DAC
IC310
IC307
BUFFER
IC308
BUFFER
IC309
BUFFER
IC306 (1/3)
IC306 (2/3)
IC305
EEPROM
IC304
RESET
IC303
RESET
Q301, 302
IC108
DVIDER
1/2
CLR
IC109
BUFFER
IC105, 106
IC205
MAIN CPU
IC202
Q303
BUS SW
Q304
BUS SW
S301
LUT
CN301
W SDA
W SCL
TH101
X201
12.288MHz
Q202
RESET
IC110
BUFFER
Q103
FAIL SAFE
SW
IC201
RESET
IC203
RESET
D201
DISCHARGE
CN104
CN108
CN109
BALLAST
VISCA
CPU&PWROM
CN110
CN111
CN102
TO H BOARD
CN801
TO BA BOARD
CN201
TO G BOARD
CN3302
CN105
CN106
CN107
SCIROCCO
FAN50
FAN60
D103, 104
Q101, 102
SW
IC107
FAN REG
C (3D GAMMA&TG, LCD DRIVER
D/A CONVERTER)

C Block

Section 7
Diagrams

7-1. Frame Schematic Diagram

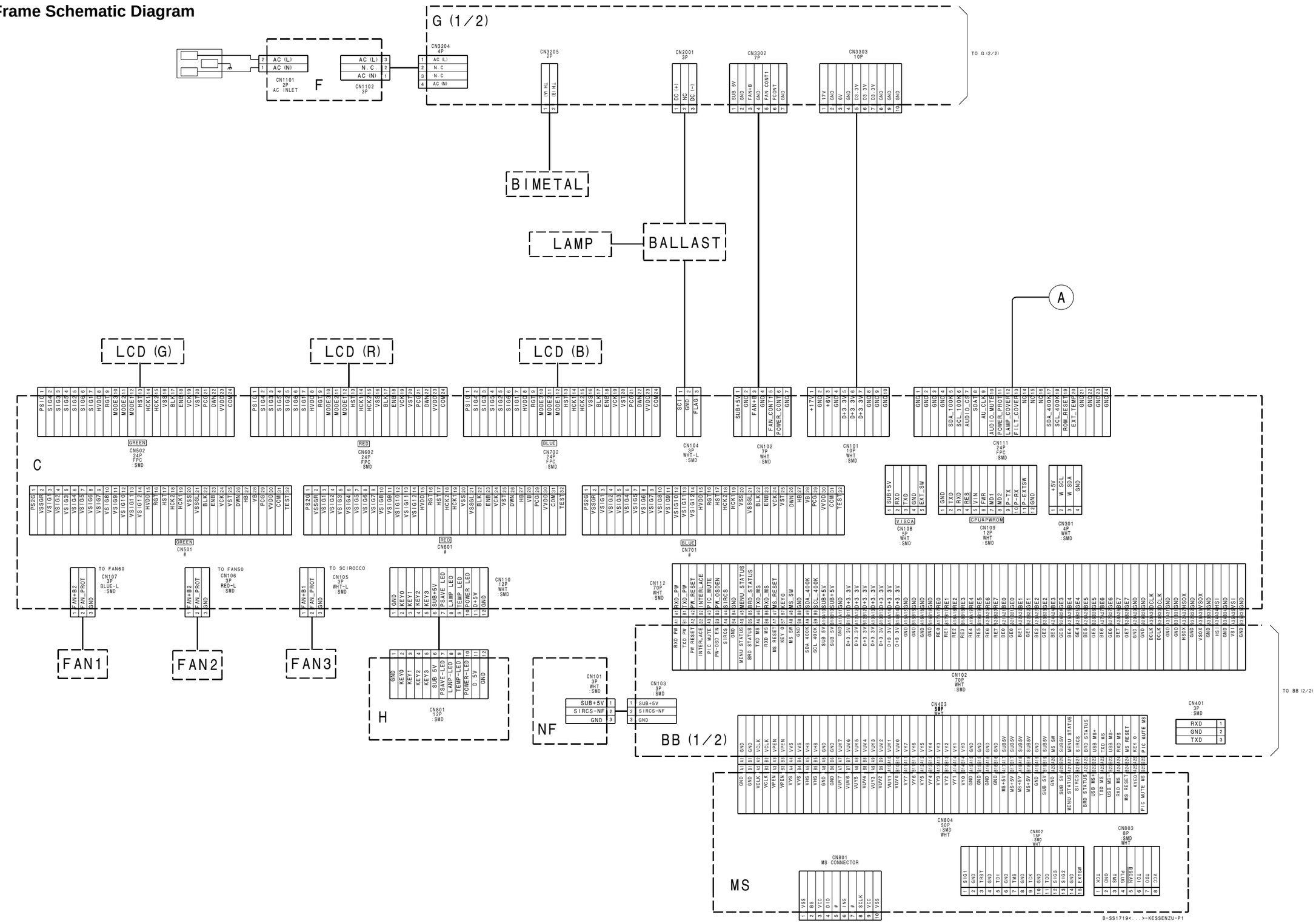

Frame(2/2)

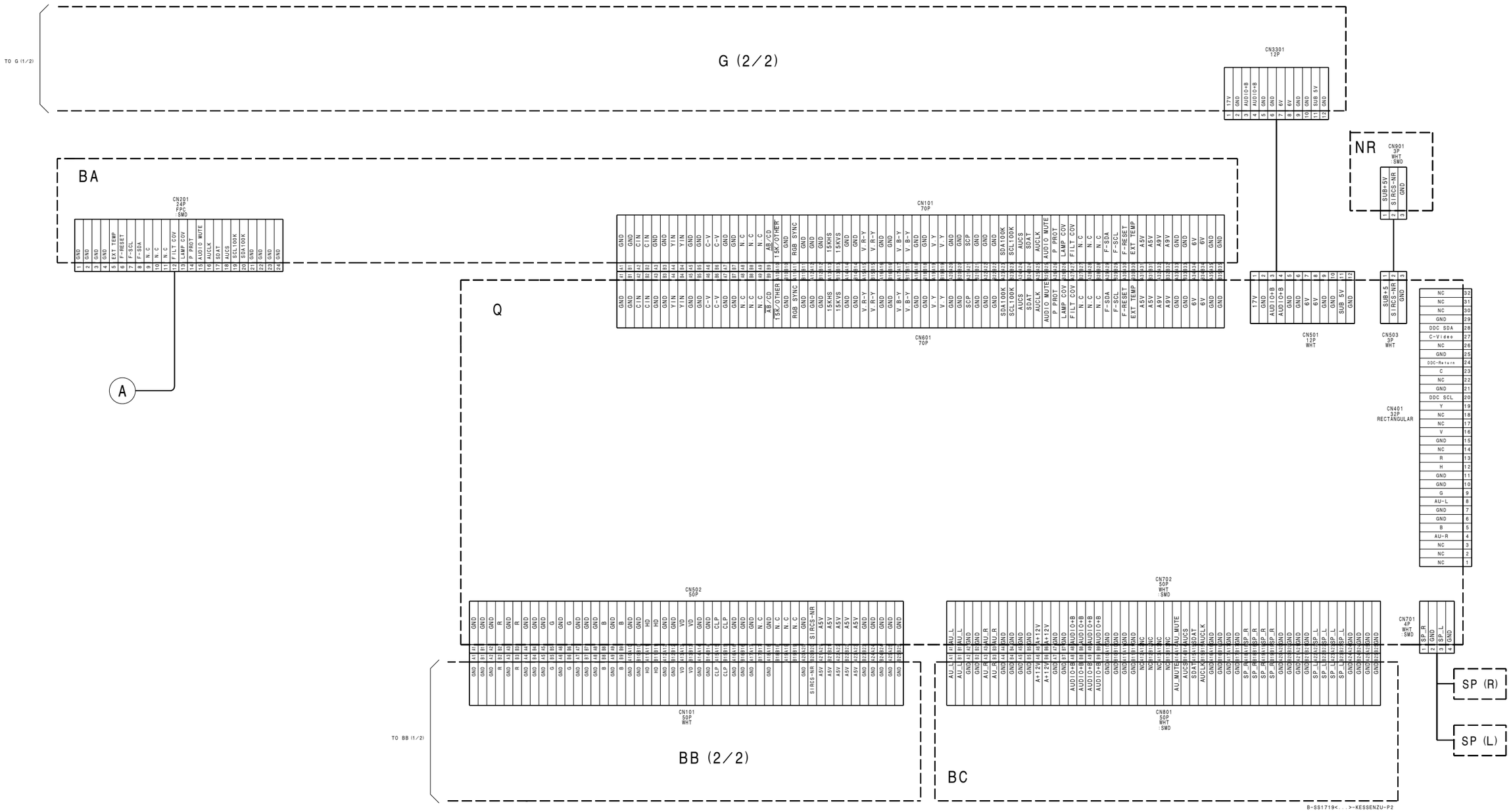
G (2/2)
TO G (1/2)
CN3301 12P
BA
CN201 24P FPC :SMD
CN101 70P
CN601 70P
Q
NR
CN901 3P WHT :SMD
CN501 12P WHT
CN503 3P WHT
CN401 32P RECTANGULAR
CN502 50P
CN101 50P WHT
BB (2/2)
TO BB (1/2)
CN702 50P WHT :SMD
CN801 50P WHT :SMD
BC
CN701 4P WHT :SMD
SP (R)
SP (L)
B-SS1719<...>-KESSENZU-P2

7-2

7-2. Schematic Diagrams and Printed Wiring Boards

Note:

- Parts marked " * " differ according to the model/destination. Refer to the mount table for each function.
- The parts marked " # " on schematic diagrams are not mounted.
- All capacitors are in µF unless otherwise noted. pF: µµF 50WV or less are not indicated except for electrolytics.
- All electrolytics are in 50 V unless otherwise specified.
- : fusible resistor
- : nonflammable resistor
- Δ : internal component
- : panel designation and adjustment for repair
- Caution when replacing chip parts
  New parts must be attached after removal of the chip.
  Be careful not to heat the minus side of a tantalum capacitor, because it is easily damaged by the heat.

Reference information

RESISTOR	RN	: METAL FILM
	RC	: SOLID
	FPRD	: NONFLAMMABLE CARBON
	FUSE	: NONFLAMMABLE FUSIBLE
	RS	: NONFLAMMABLE METAL OXIDE
	RB	: NONFLAMMABLE CEMENT
	RW	: NONFLAMMABLE WIREWOUND
	※	: ADJUSTMENT RESISTOR
COIL	LF-8L	: MICRO INDUCTOR
CAPACITOR	TA	: TANTALUM
	PS	: STYROL
	PP	: POLYPROPYLENE
	PT	: MYLAR
	MPS	: METALIZED POLYESTER
	MPP	: METALIZED POLYPROPYLENE
	ALB	: BIPOLAR
	ALT	: HIGH TEMPERATURE
	ALR	: HIGH RIPPLE

[Measuring conditions, voltage and waveform]

- A voltage value is the reference value between the measurement point and the earth, when the RGB color bar signal is received from the color bar generator (digital multi-meter used: 10 M ohms/V DC).
- Unit of voltage is V (volt).
- : B+line
- : B– line
- Voltage variations may occur due to normal production tolerances.
- ★ : Measurement disabled.
- Circled numbers indicate the reference waveform.
- : Signal path.

The components identified marked ⚠ are critical for safety.
Replace only with the part number specified.

Les composants identifiés par la marque ⚠ sont critiques pour la sécurité.
Ne les remplacer que par une pièce portant le numéro spécifié.

7-3

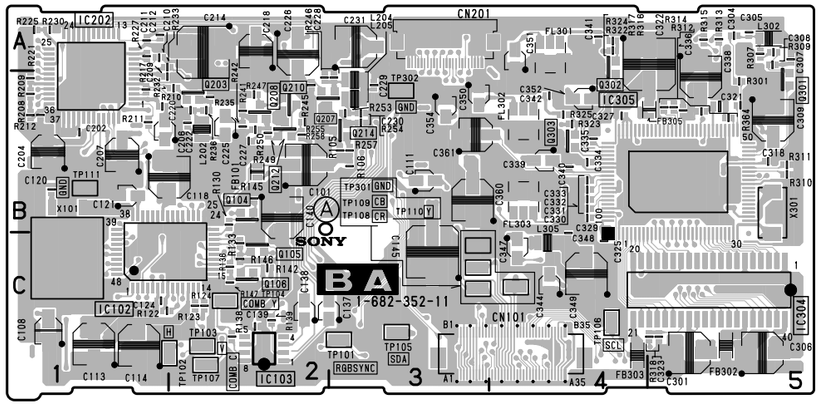

BA -A SIDE-
SUFFIX: -11

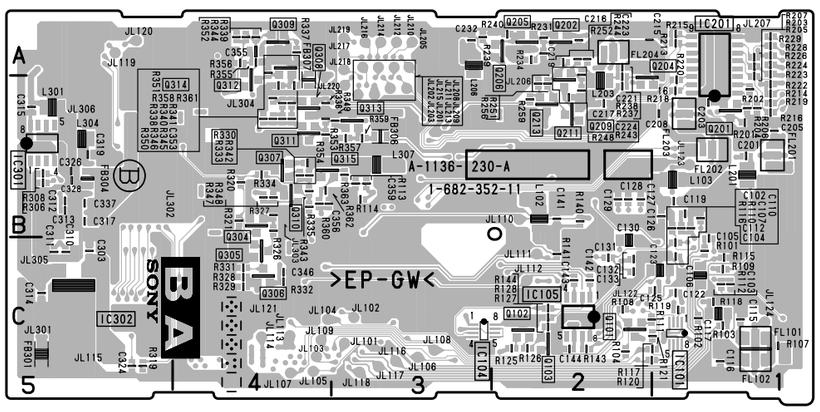

BA -B SIDE-
SUFFIX: -11

--
BA
--
1-682-352-11

IC101	*C-2	Q204	*B-2	Q310	*B-4
IC102	C-1	Q202	*A-2	Q311	*B-4
IC103	C-2	Q205	*A-2	Q312	*B-4
IC104	*C-3	Q206	*A-2	Q313	*B-3
IC105	*C-2	Q207	B-3	Q314	*A-4
IC201	*A-1	Q208	B-2	Q315	*B-4
IC202	B-1	Q209	*B-2		
IC301	*B-5	Q210	B-2	TP101	C-3
IC302	*C-5	Q211	*B-2	TP102	C-2
IC304	C-5	Q212	B-2	TP103	C-2
IC305	B-5	Q213	*B-2	TP104	C-2
		Q214	B-3	TP105	C-3
Q101	*C-2	Q301	B-5	TP106	C-4
Q102	*C-2	Q302	B-4	TP107	C-2
Q103	*C-2	Q303	B-4	TP108	C-3
Q104	B-2	Q304	*B-4	TP109	C-3
Q105	C-2	Q305	*C-4	TP110	C-4
Q106	C-2	Q306	*C-4	TP111	B-2
Q201	*B-1	Q307	*B-4	TP301	C-3
Q202	*A-2	Q308	*B-4	TP302	B-3
Q203	B-2	Q309	*A-4		

*:B Side mount

MC141627FT (IC202)

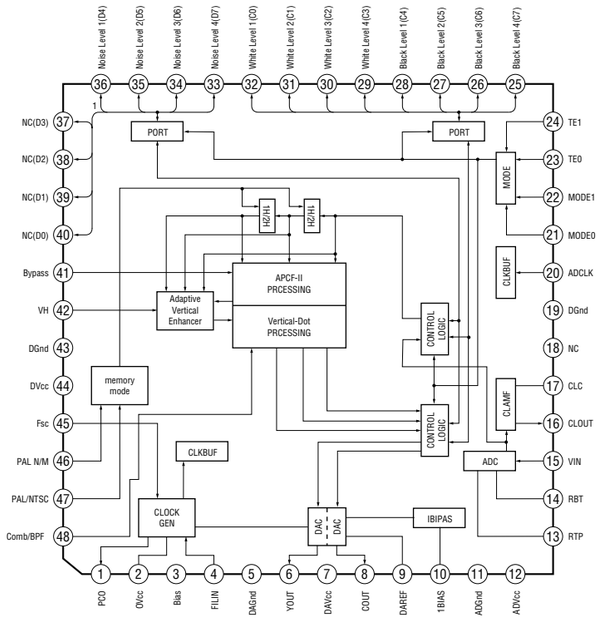

NJM2533M (IC103,IC105

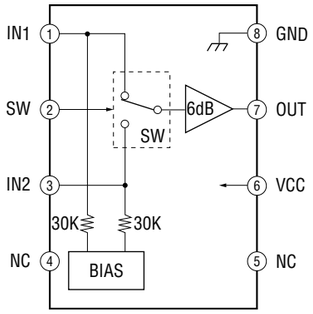

BA033F-E2 (IC301)

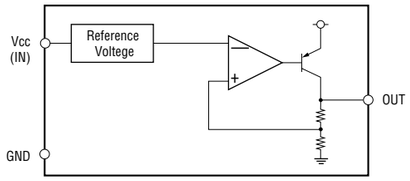

CXA1875AM (IC201)

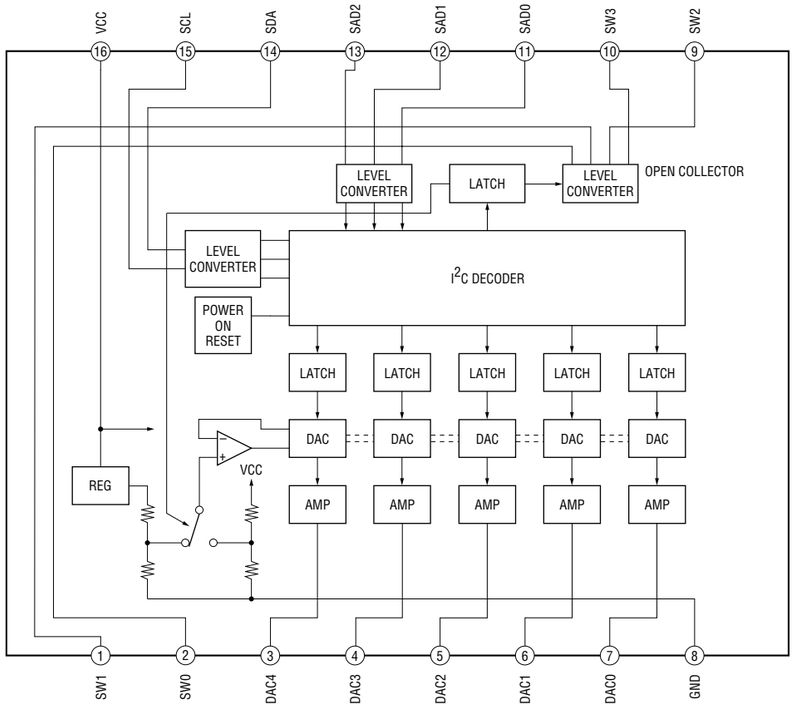

 BA (1/3)

- **Refer to page 7-4 for Printed Wiring Board**
- **Refer to page 7-4 for IC Block Diagrams**

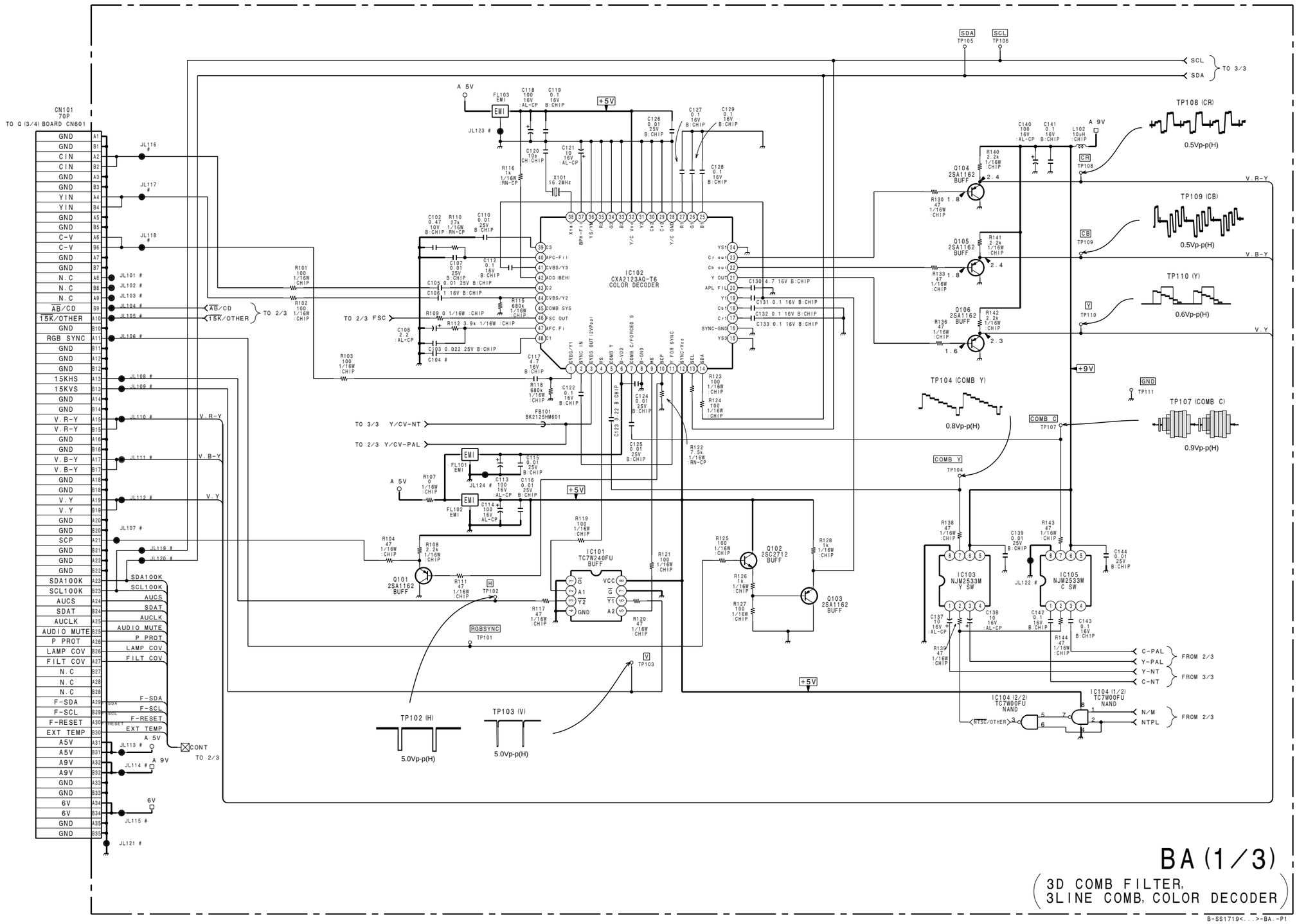

 7-5

 BA (2/3)

- **Refer to page 7-4 for Printed Wiring Board**
- **Refer to page 7-4 for IC Block Diagrams**

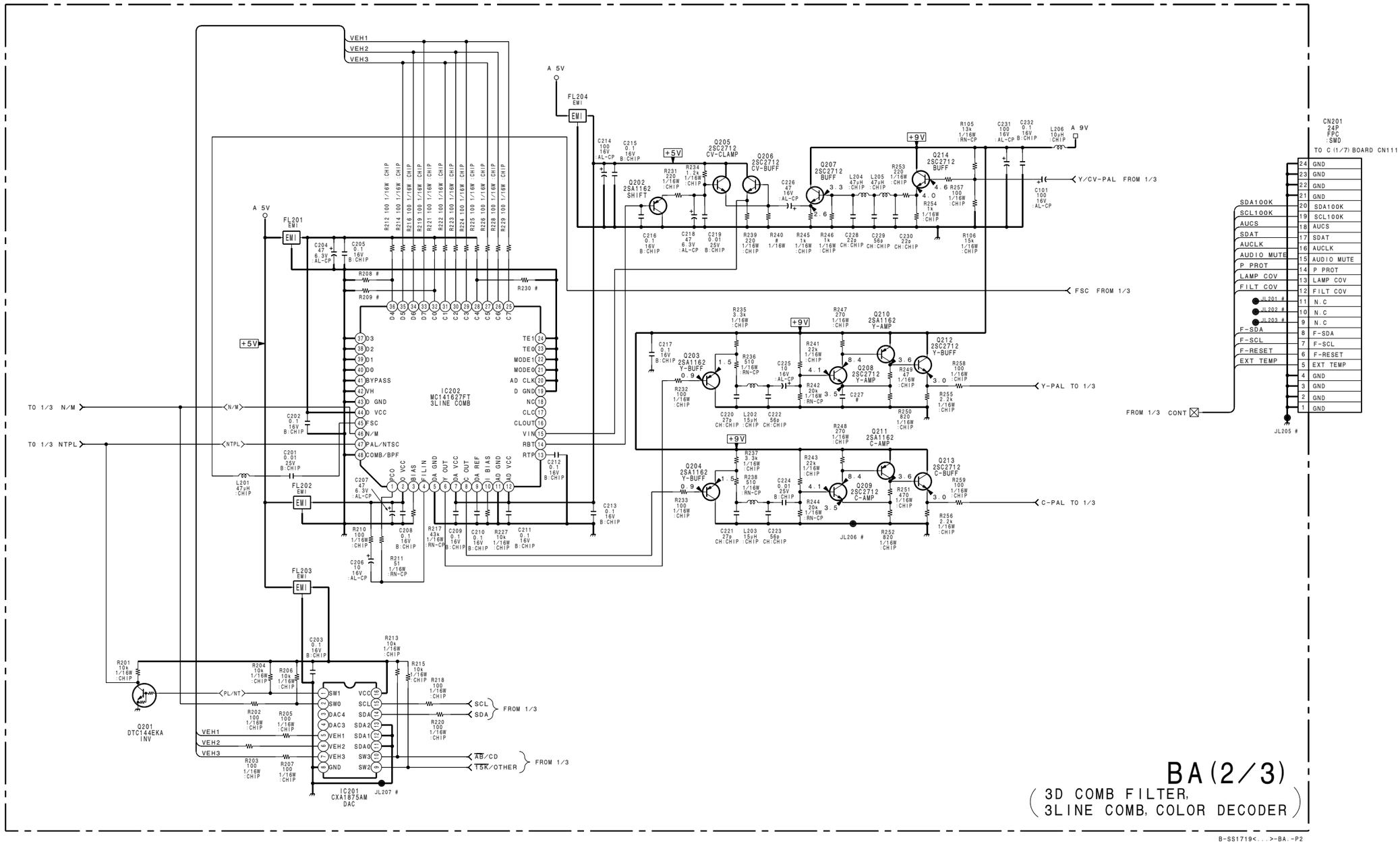

 7-6

 BA (3/3)

- **Refer to page 7-4 for Printed Wiring Board**
- **Refer to page 7-4 for IC Block Diagrams**

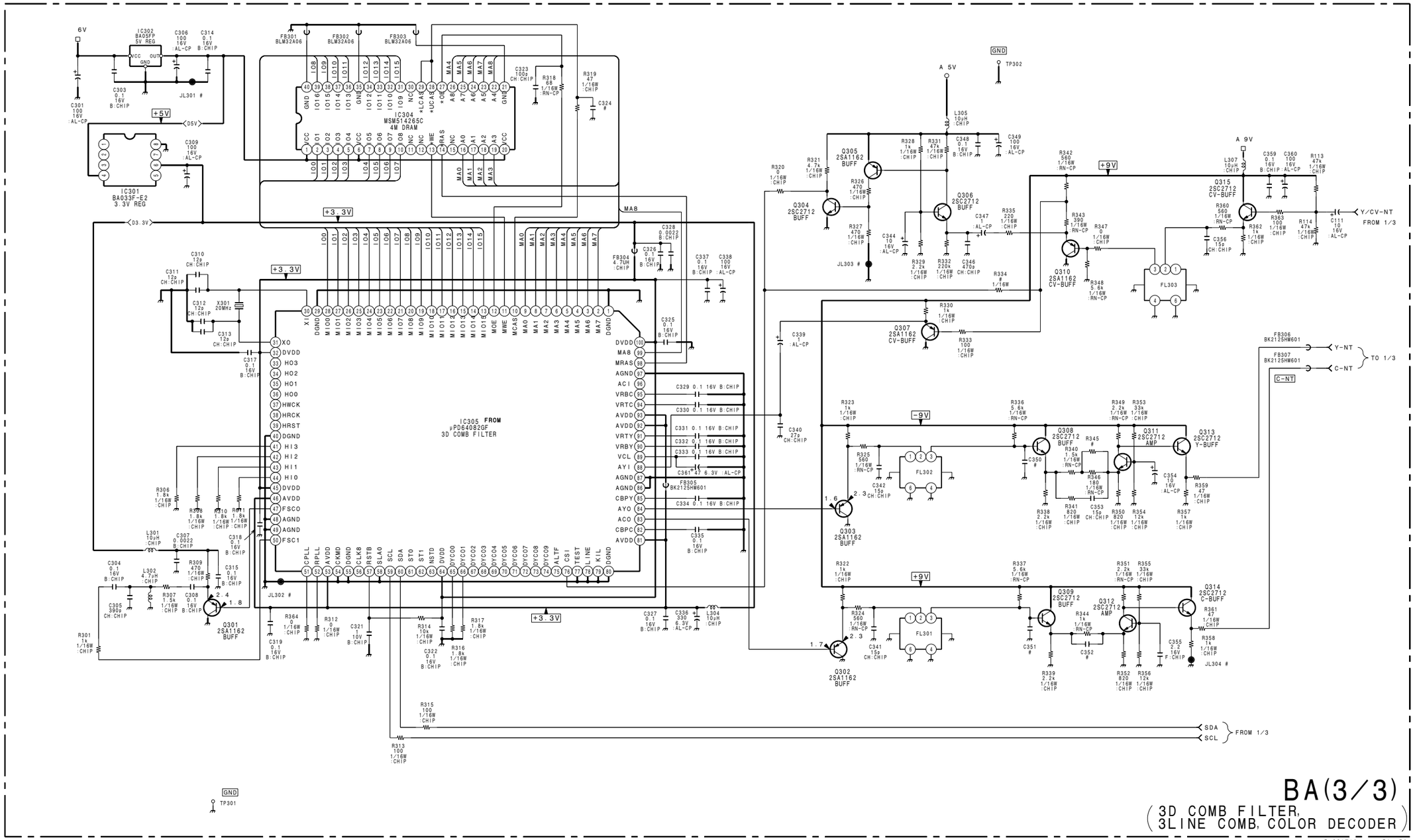

 7-7

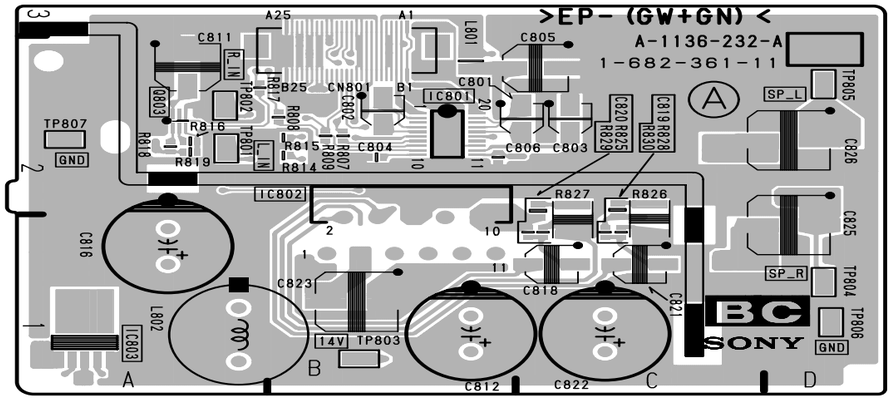

BB -A SIDE-
SUFFIX: -11

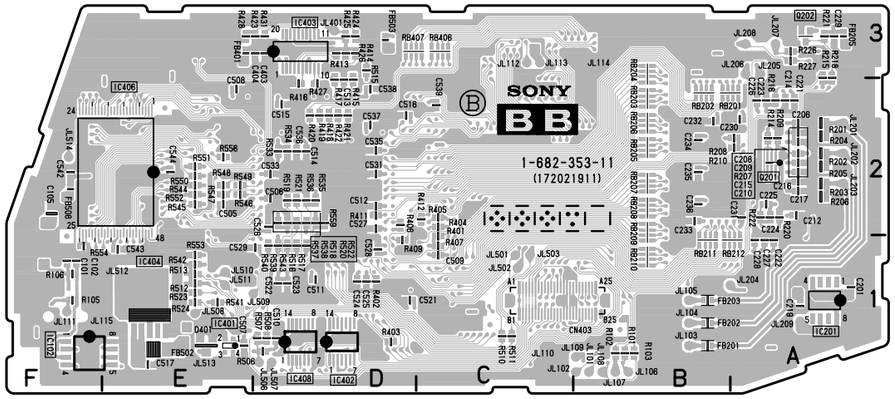

BB -B SIDE-
SUFFIX: -11

--
BB
--
1-682-353-11

D401	∗E-1	Q202	∗A-3
IC102	∗F-1	TP101	B-3
IC201	A-1	TP102	B-3
IC202	A-1	TP112	C-1
IC203	A-2	TP201	B-1
IC204	A-3	TP202	B-1
IC401	∗E-1	TP203	B-1
IC402	∗D-1	TP204	A-3
IC403	∗D-3	TP205	A-3
IC404	E-1	TP206	B-1
IC405	E-2	TP207	B-1
IC406	∗E-2	TP401	D-3
IC408	∗D-1	TP403	C-3
Q201	∗A-2	∗:B Side mount	

BA033F (IC201)

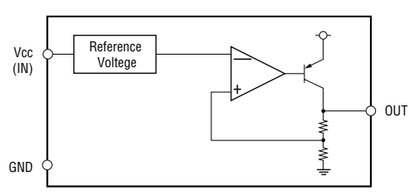

AD9884AKS-100 (IC203)

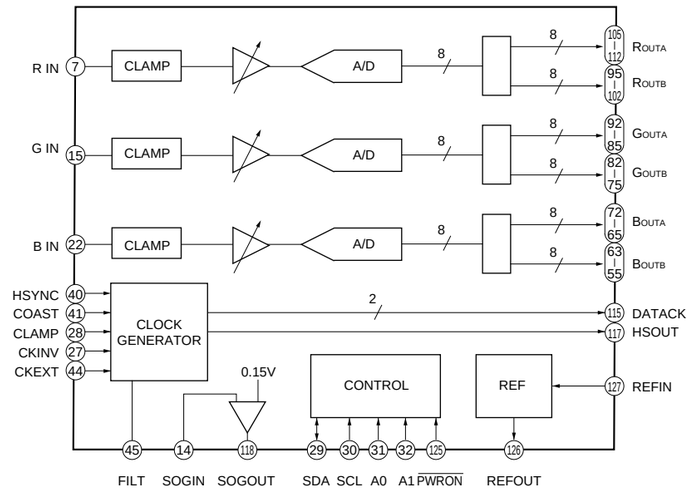

74VHC125MTCX (IC204)

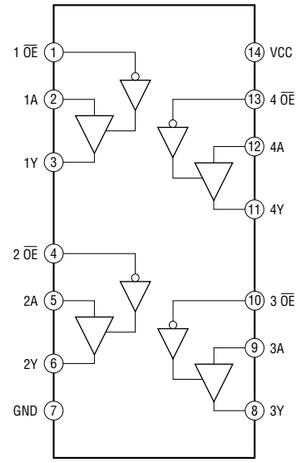

MK1714-01(IC403)

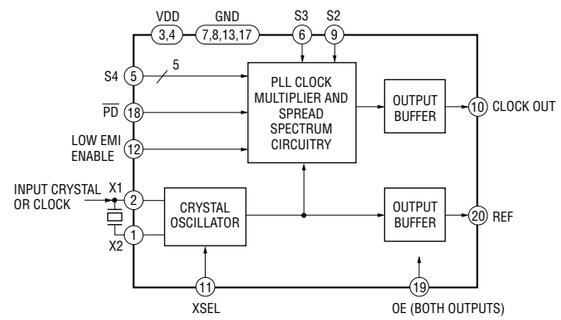

IRMF-AOT-QTP (IC102)

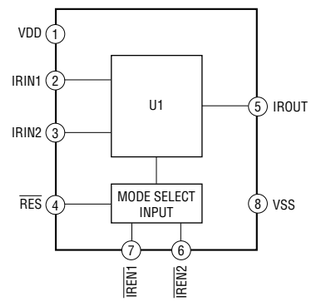

LP29851M5X-3.3 (IC202)

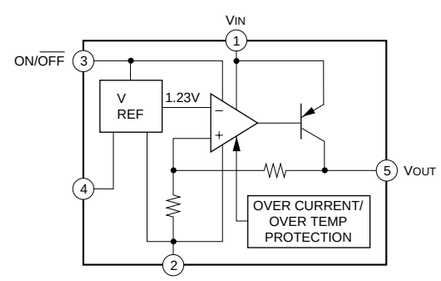

S-80828ANNP (IC401)

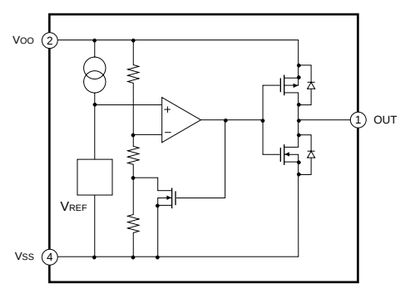

- **Refer to page 7-8 for Printed Wiring Board**
- **Refer to page 7-8 for IC Block Diagrams**

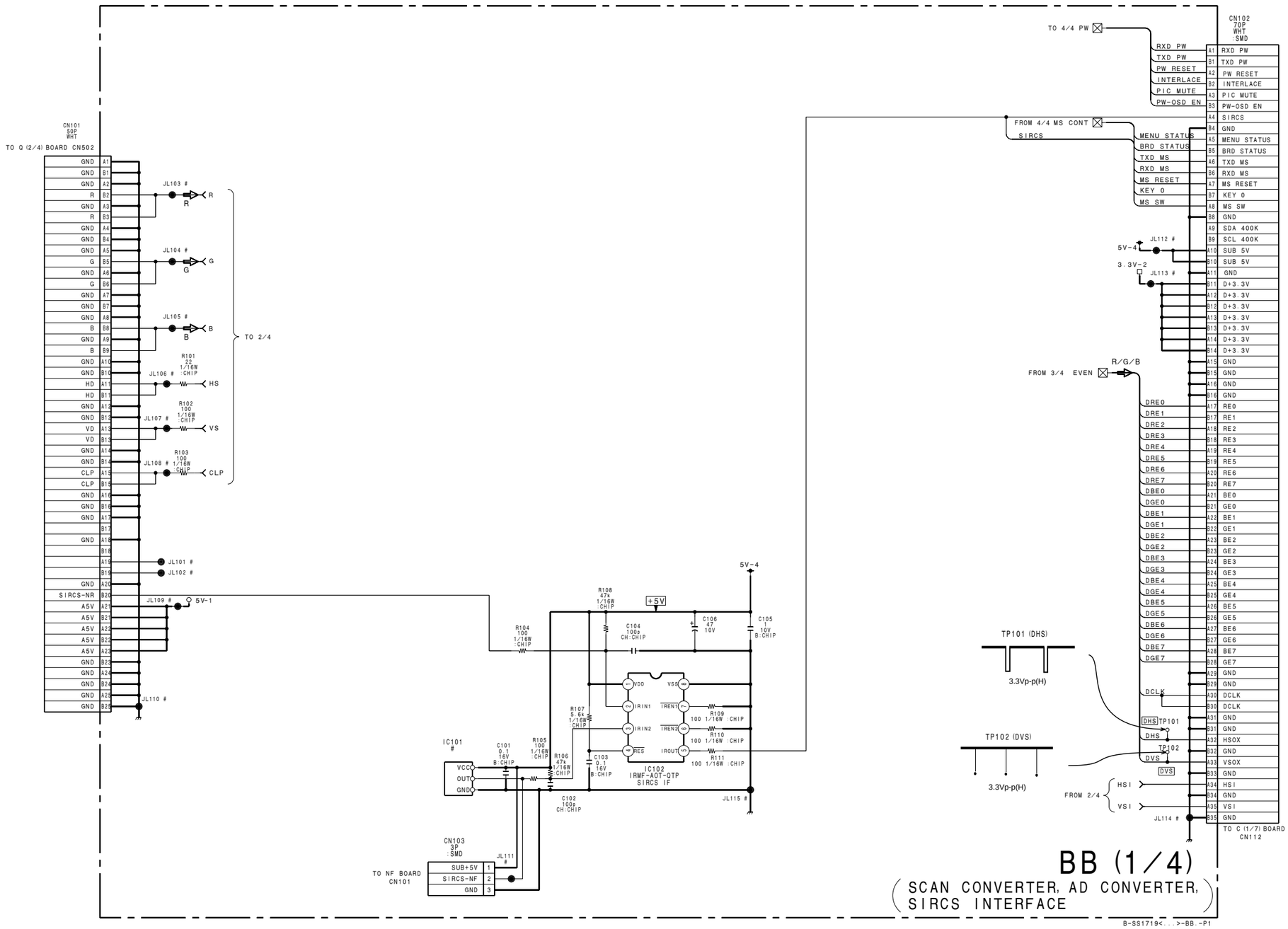

 BB (2/4)

- **Refer to page 7-8 for Printed Wiring Board**
- **Refer to page 7-8 for IC Block Diagrams**

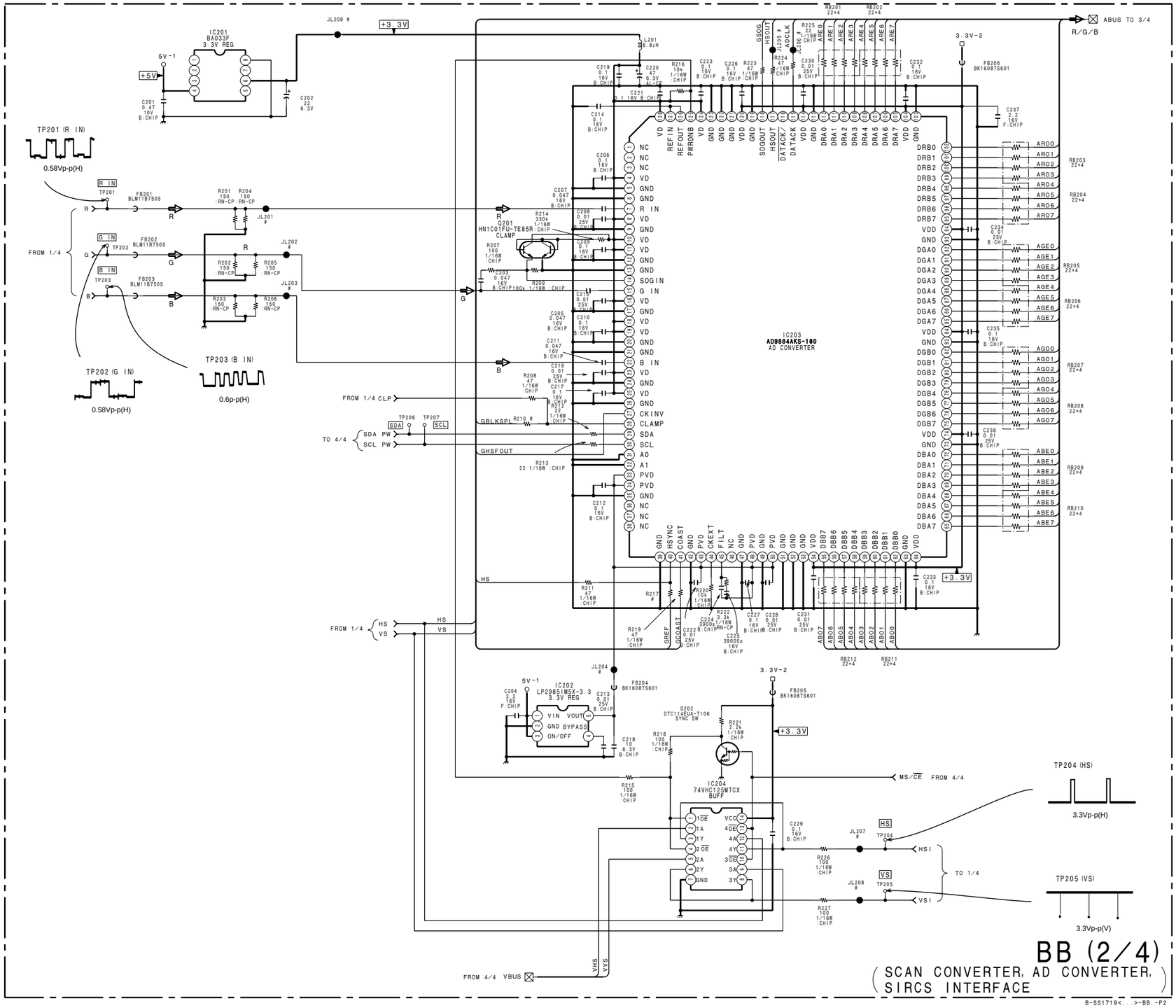

 7-10

 BB (3/4)

- **Refer to page 7-8 for Printed Wiring Board**
- **Refer to page 7-8 for IC Block Diagrams**

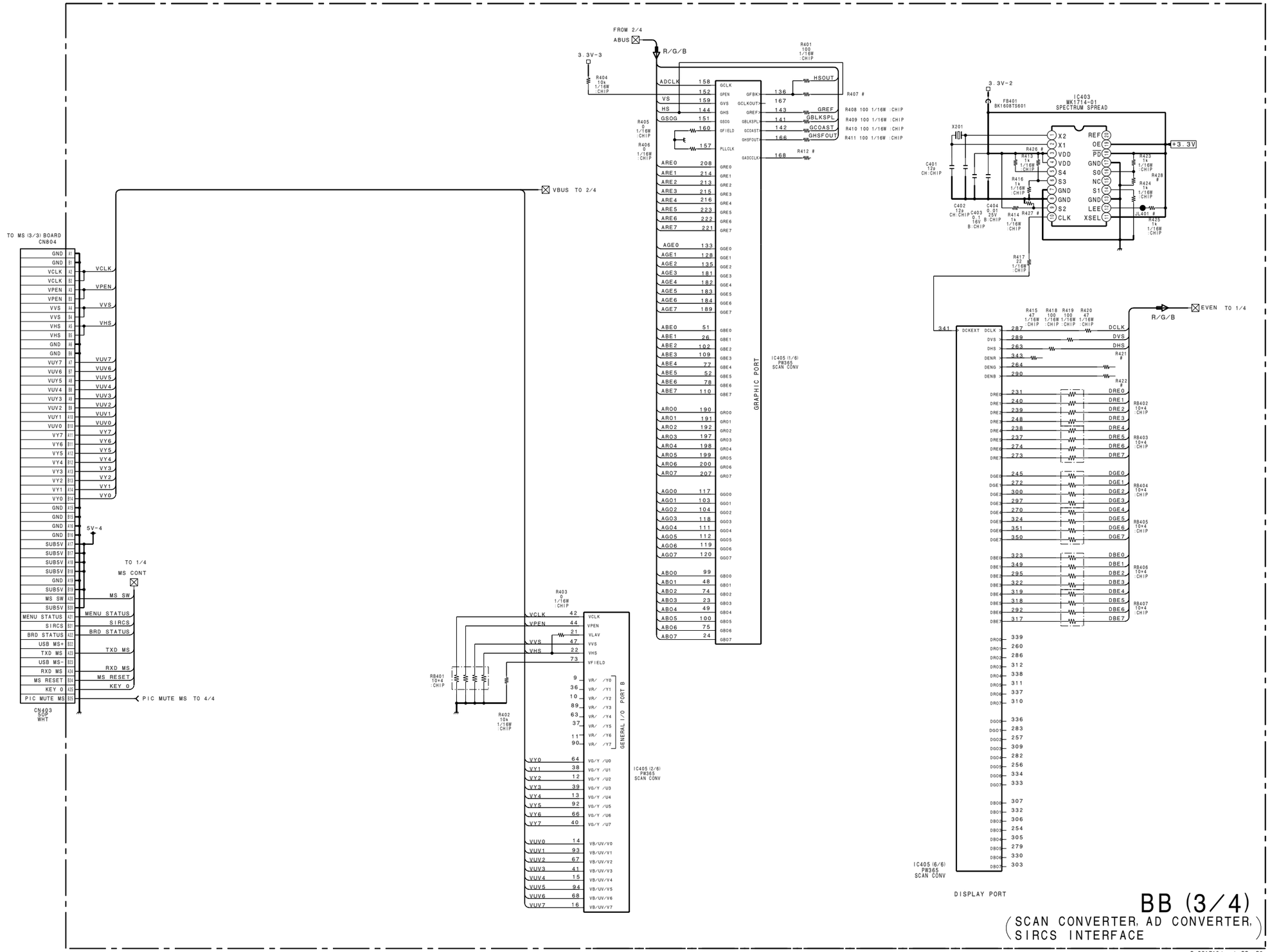

 7-11

 BB (4/4)

- **Refer to page 7-8 for Printed Wiring Board**
- **Refer to page 7-8 for IC Block Diagrams**

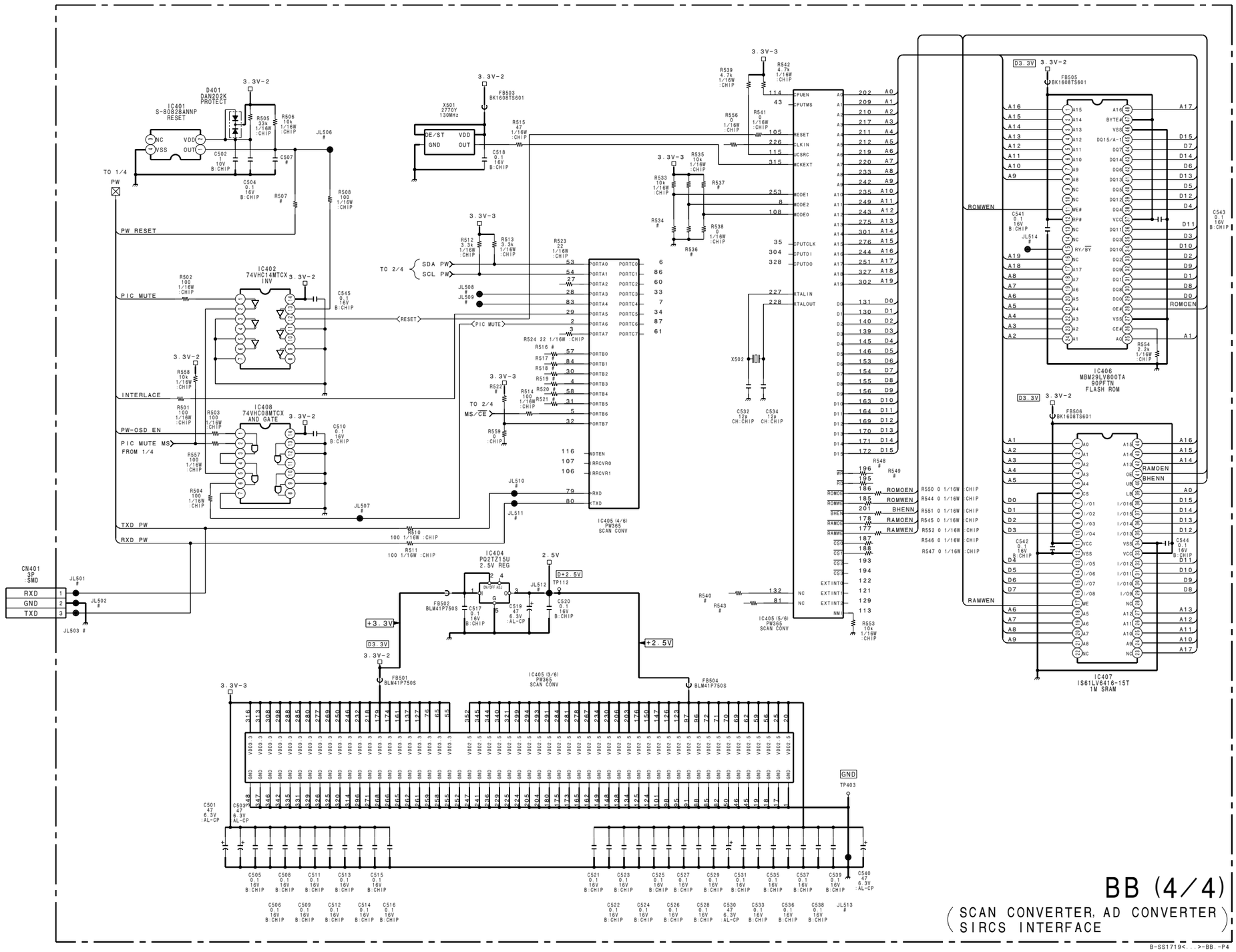

 7-12

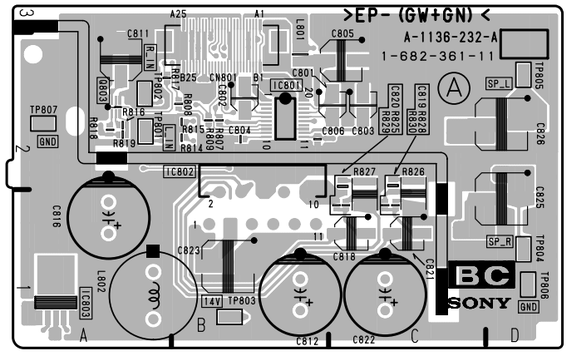

BC -A SIDE-
SUFFIX: -11

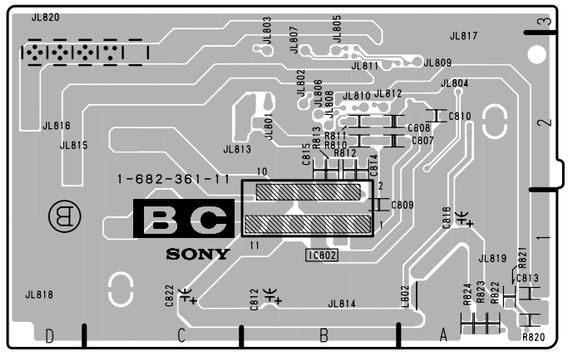

BC -B SIDE-
SUFFIX: -11

CXA1846BN/T4 (IC801)

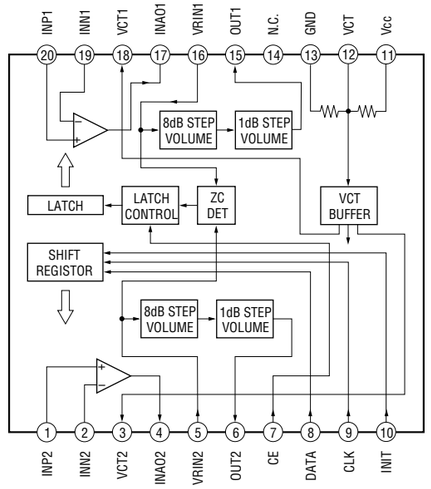


```
--
BC
--
1-682-361-11

IC801    B-1
IC802    B-2
IC803    A-2

Q803     A-2

TP801    A-2
TP802    A-2
TP803    B-1
TP804    D-1
TP805    D-2
TP806    D-1
TP807    A-2
```

- **Refer to page 7-13 for Printed Wiring Board**
- **Refer to page 7-13 for IC Block Diagram**

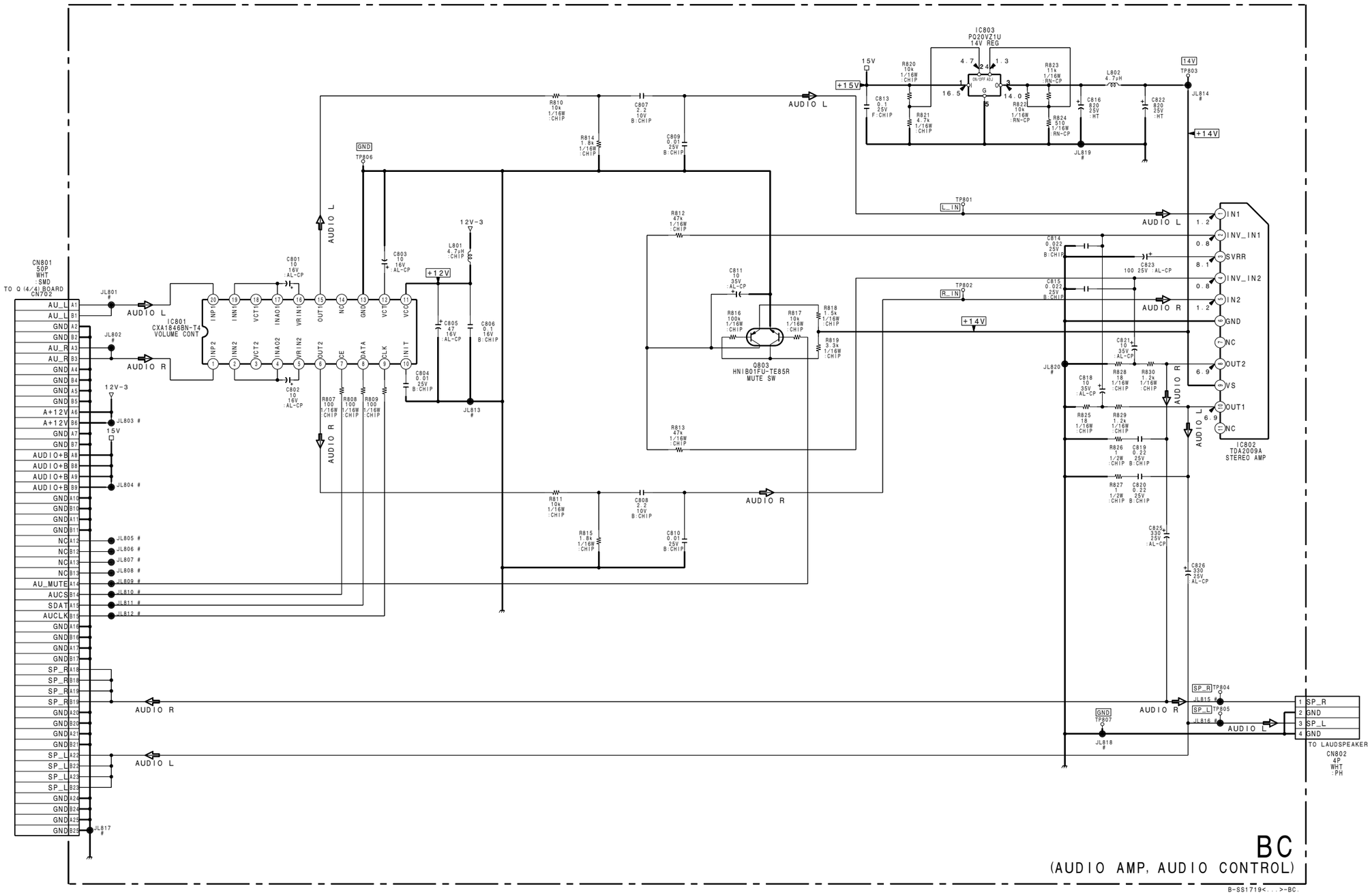

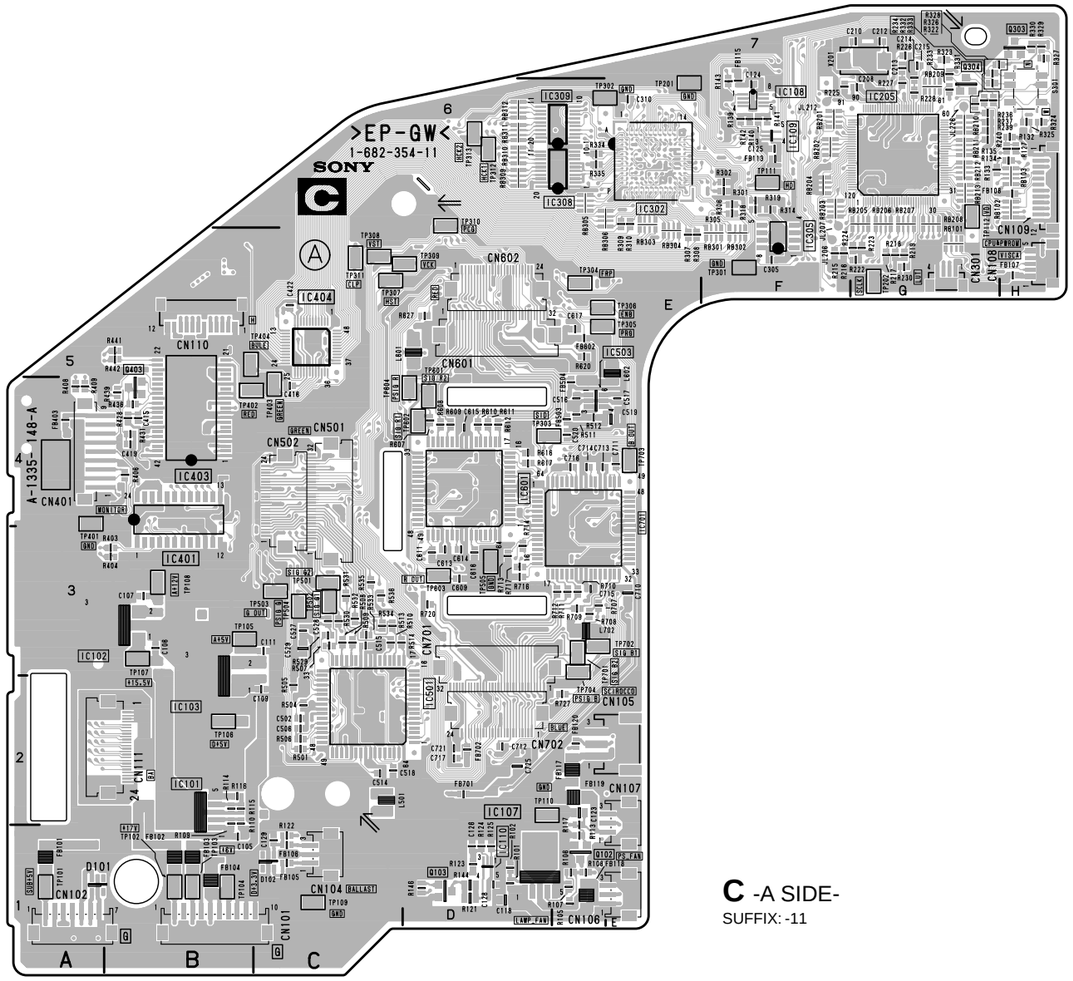

C -A SIDE-
SUFFIX: -11

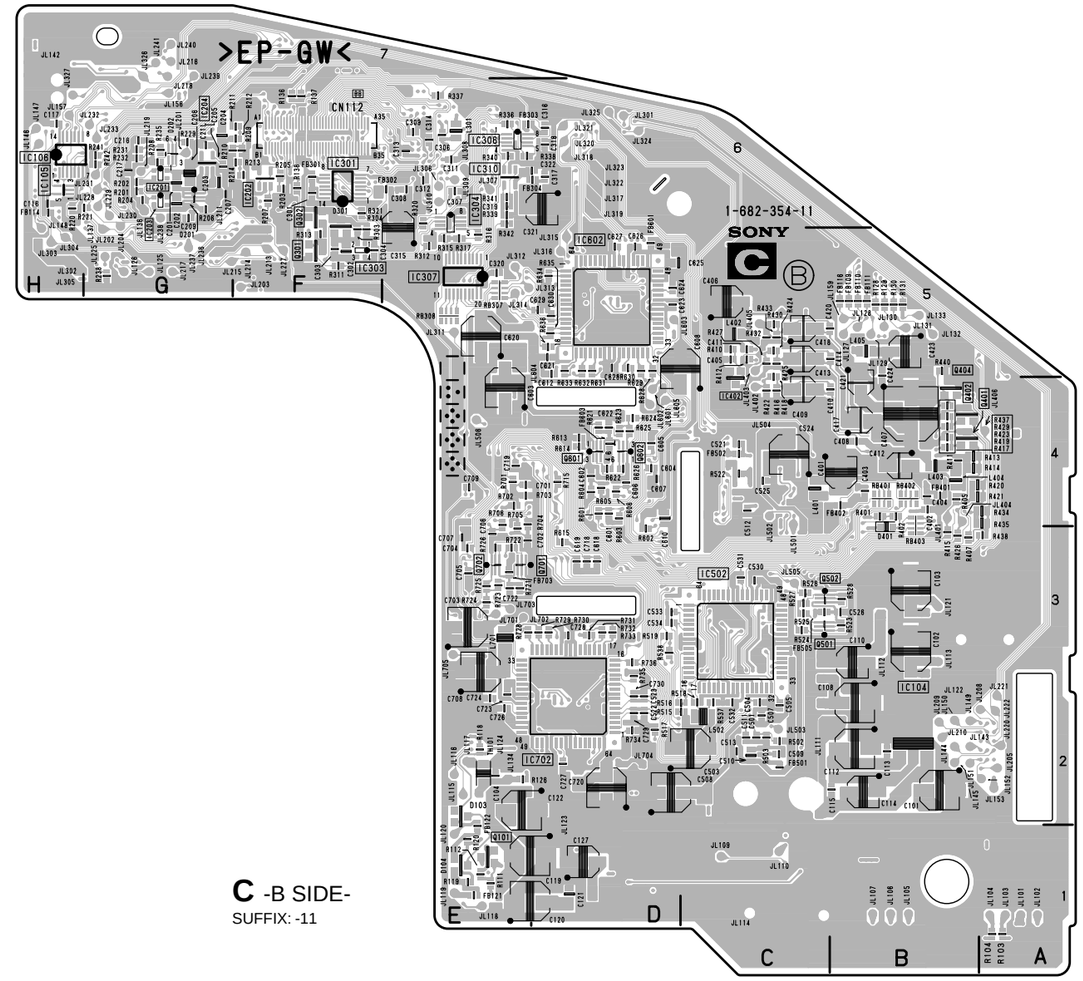

C -B SIDE-
SUFFIX: -11

—
C
—
1-682-354-11 ∗:B Side mount

D101	A-1	IC101	B-2	Q101	∗E-1	TP101	A-1	TP309	C-5
D102	C-1	IC102	C-1	Q102	E-1	TP102	B-1	TP310	D-6
D103	∗E-2	IC103	B-2	Q103	D-1	TP103	B-1	TP311	C-5
D104	∗E-1	IC205	G-6	Q301	∗G-5	TP104	B-1	TP312	D-6
D201	∗G-6	IC301	∗G-6	Q302	∗G-6	TP105	B-3	TP313	D-6
D202	∗G-6	IC302	E-6	Q303	H-7	TP106	B-2	TP401	A-4
D301	∗F-6	IC303	∗F-5	Q304	G-6	TP107	B-3	TP402	B-4
D401	∗B-4	IC304	∗E-6	Q401	∗B-7	TP108	B-3	TP403	C-4
		IC305	F-5	Q402	∗B-7	TP109	C-1	TP404	B-5
		IC306	∗E-6	Q403	B-4	TP110	D-2	TP501	C-3
		IC307	∗E-5	Q404	B-4	TP111	F-6	TP502	C-3
		IC308	E-6	Q501	∗C-3	TP112	G-6	TP503	C-3
		IC309	∗E-6	Q502	∗C-3	TP201	E-6	TP504	C-3
		IC310	∗E-6	Q601	∗D-4	TP202	G-5	TP505	D-3
		IC401	B-4	Q602	∗D-4	TP301	F-5	TP601	D-4
		IC402	∗C-5	Q701	∗E-3	TP302	E-6	TP602	D-4
		IC403	B-4	Q702	∗E-3	TP303	D-4	TP603	D-3
		IC404	C-5			TP304	E-5	TP604	D-4
		IC501	C-3			TP305	E-5	TP701	E-3
		IC503	E-4			TP306	E-5	TP702	E-3
		IC601	D-4			TP307	C-5	TP703	E-4
		IC701	E-3			TP308	C-5	TP704	E-3

M52749FP (IC403)

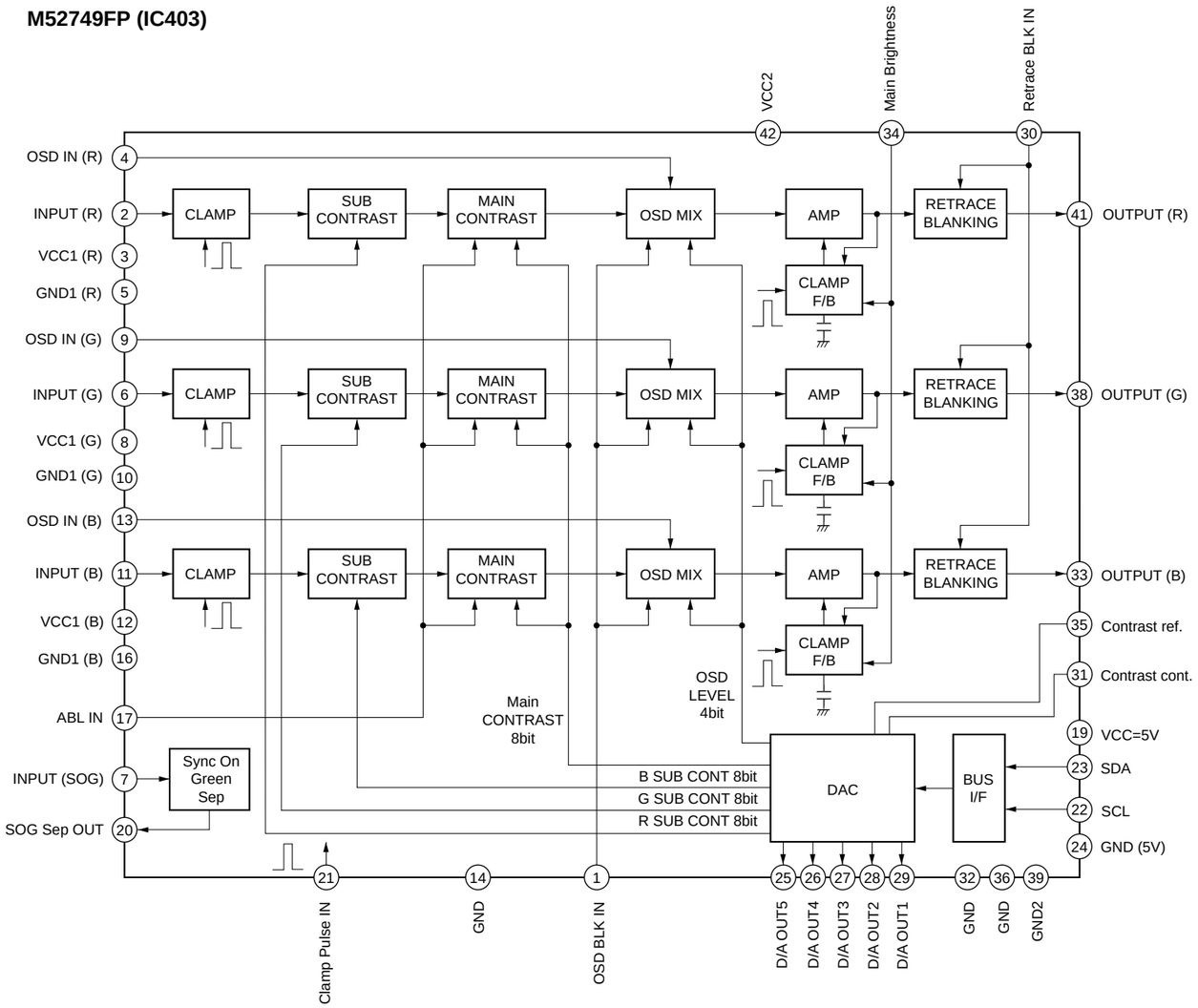

CXA3512R-T6 (IC501,601,701)

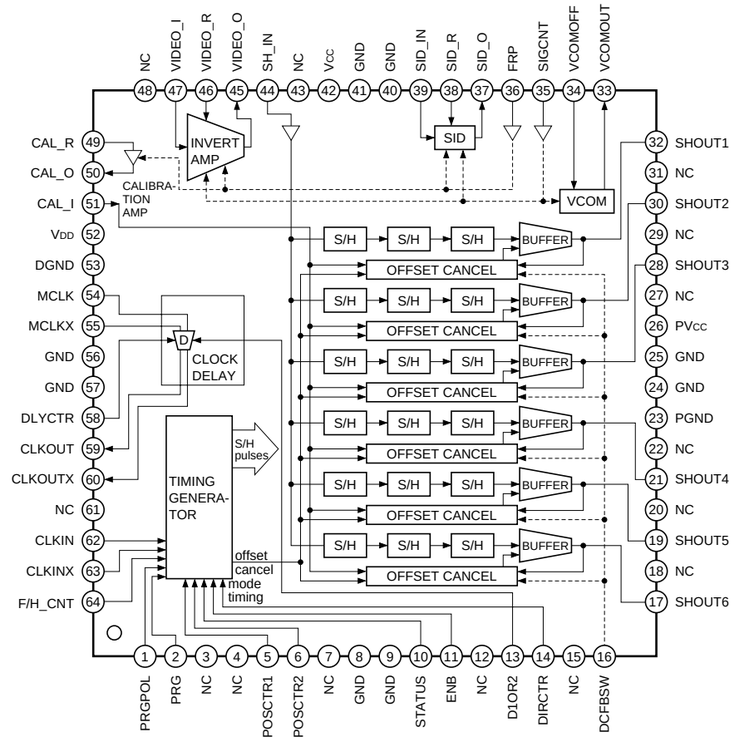

ADV7123KST140 (IC404)

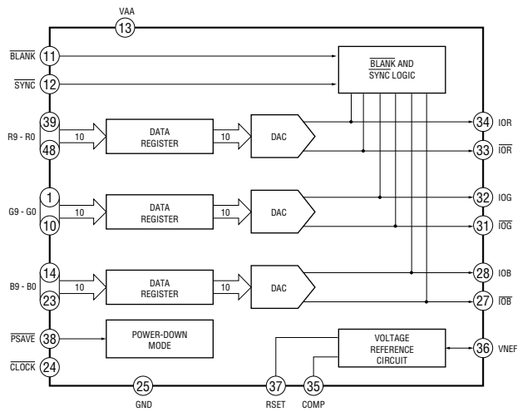

TC7WH74FU(TE12R) (IC108)

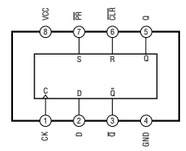

S-80828ANNP (IC303)

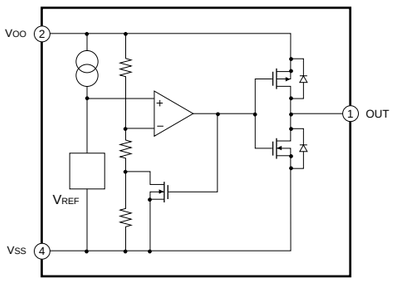

LP2985IM5X-3.3 (IC204)

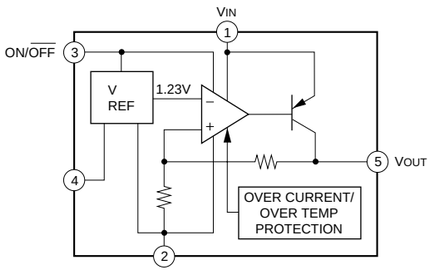

BA05FP-E2 (IC103,104)

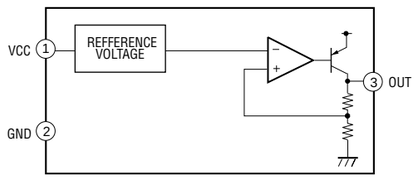

 C (1/7)

- **Refer to page 7-15 for Printed Wiring Board**
- **Refer to page 7-16 for IC Block Diagrams**

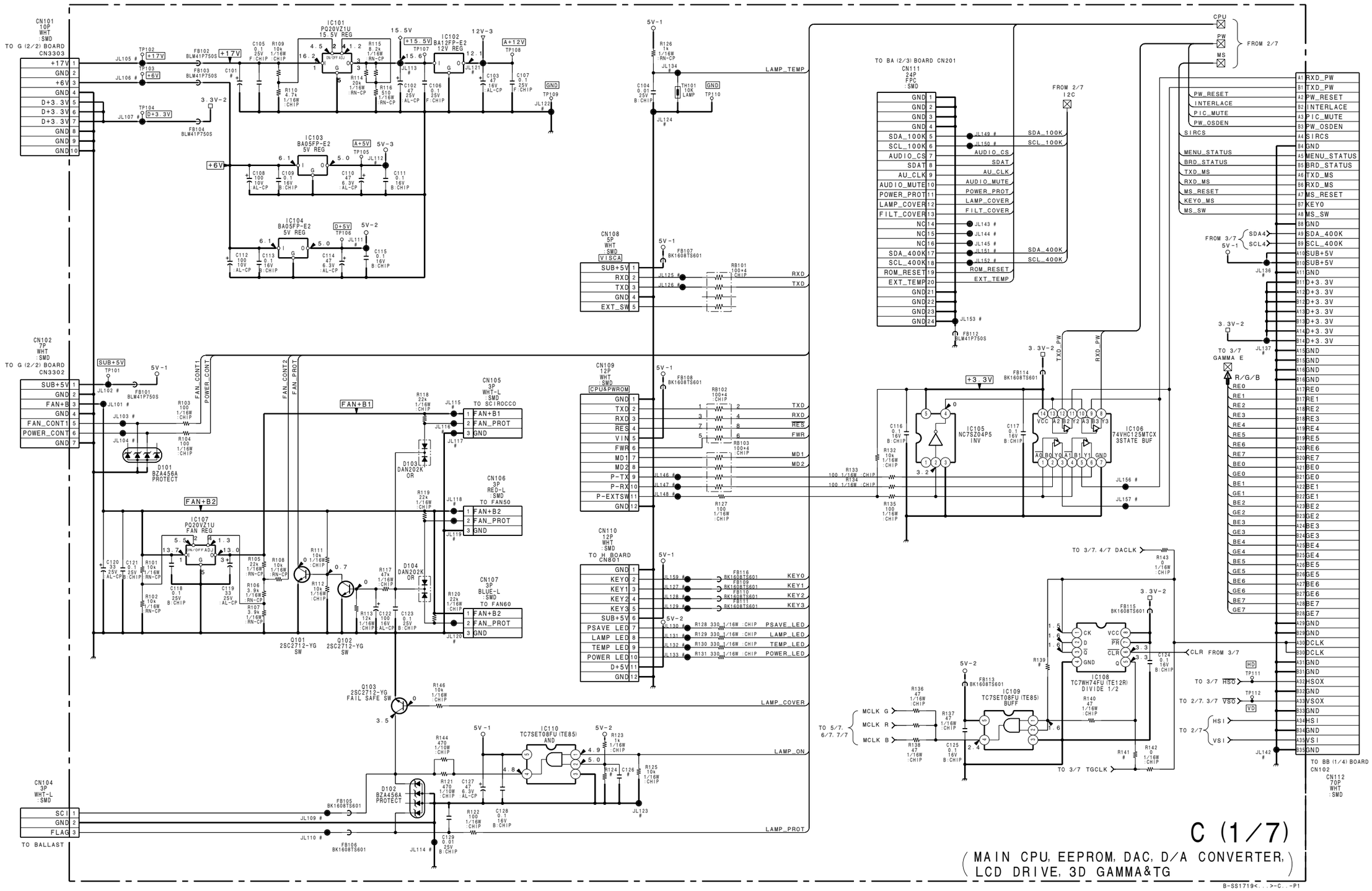

 C (2/7)

- **Refer to page 7-15 for Printed Wiring Board**
- **Refer to page 7-16 for IC Block Diagrams**

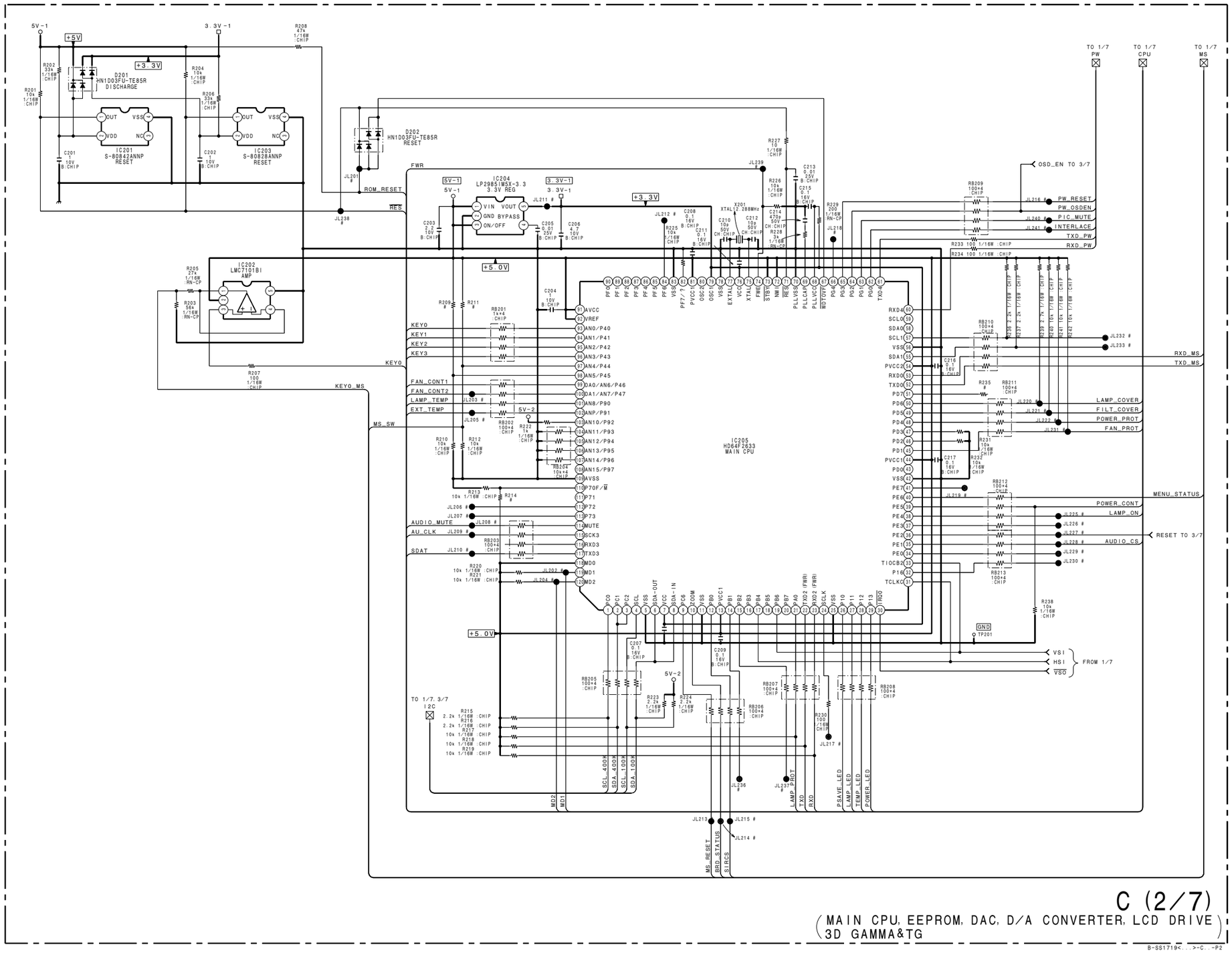

 7-18

 C (3/7)

- **Refer to page 7-15 for Printed Wiring Board**
- **Refer to page 7-16 for IC Block Diagrams**

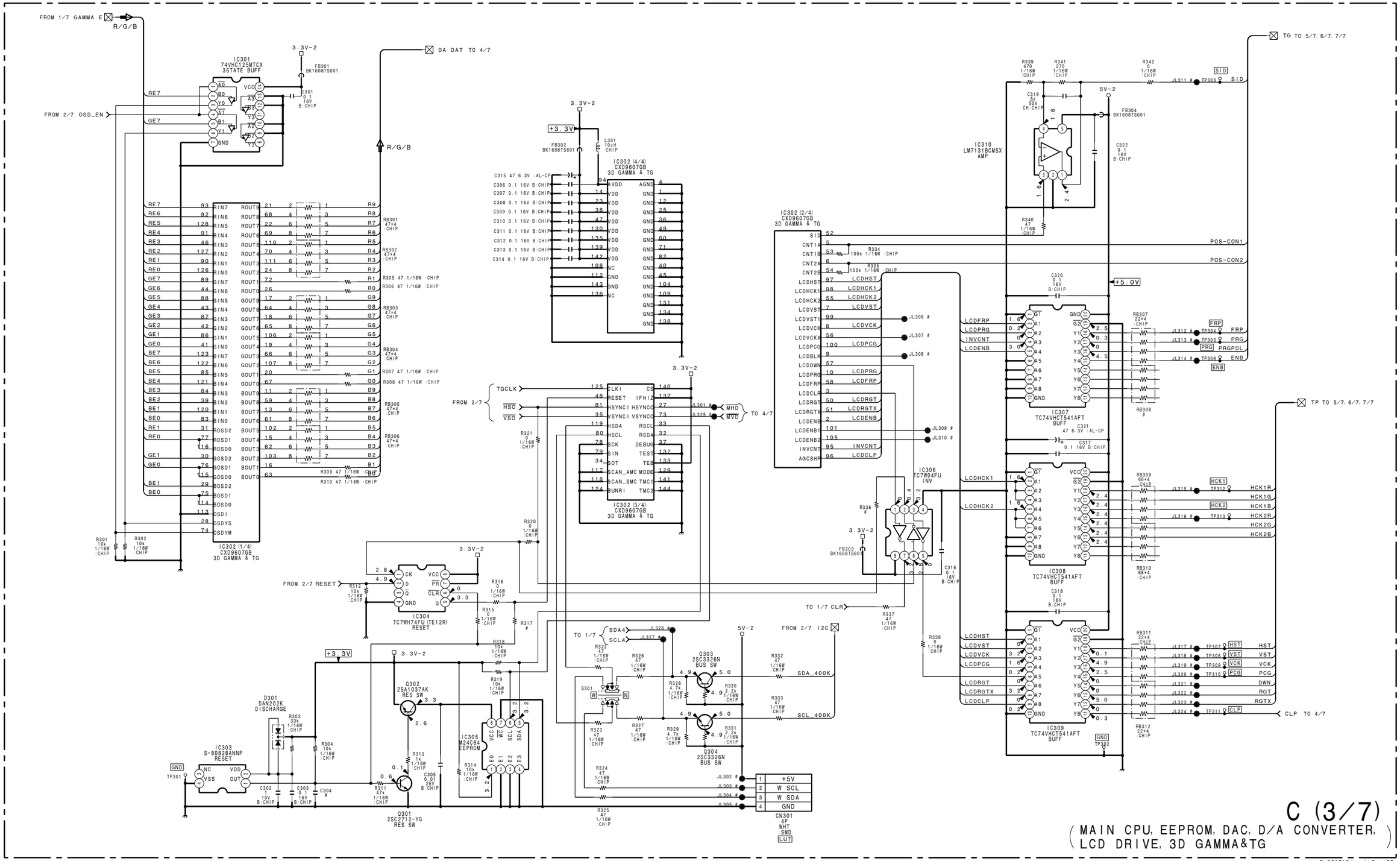

 7-19

 C (4/7)

- **Refer to page 7-15 for Printed Wiring Board**
- **Refer to page 7-16 for IC Block Diagrams**

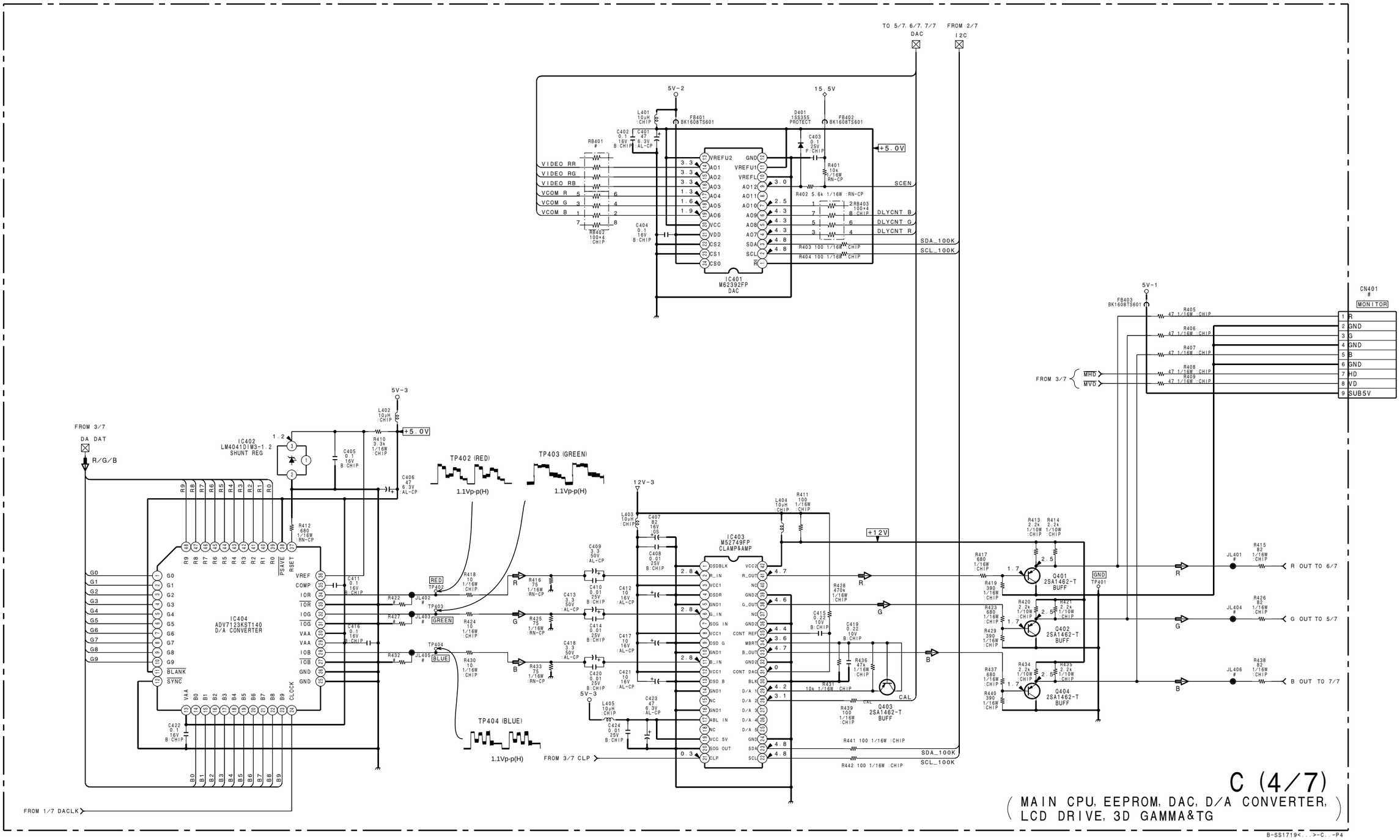

 7-20

 C (5/7)

- **Refer to page 7-15 for Printed Wiring Board**
- **Refer to page 7-16 for IC Block Diagrams**

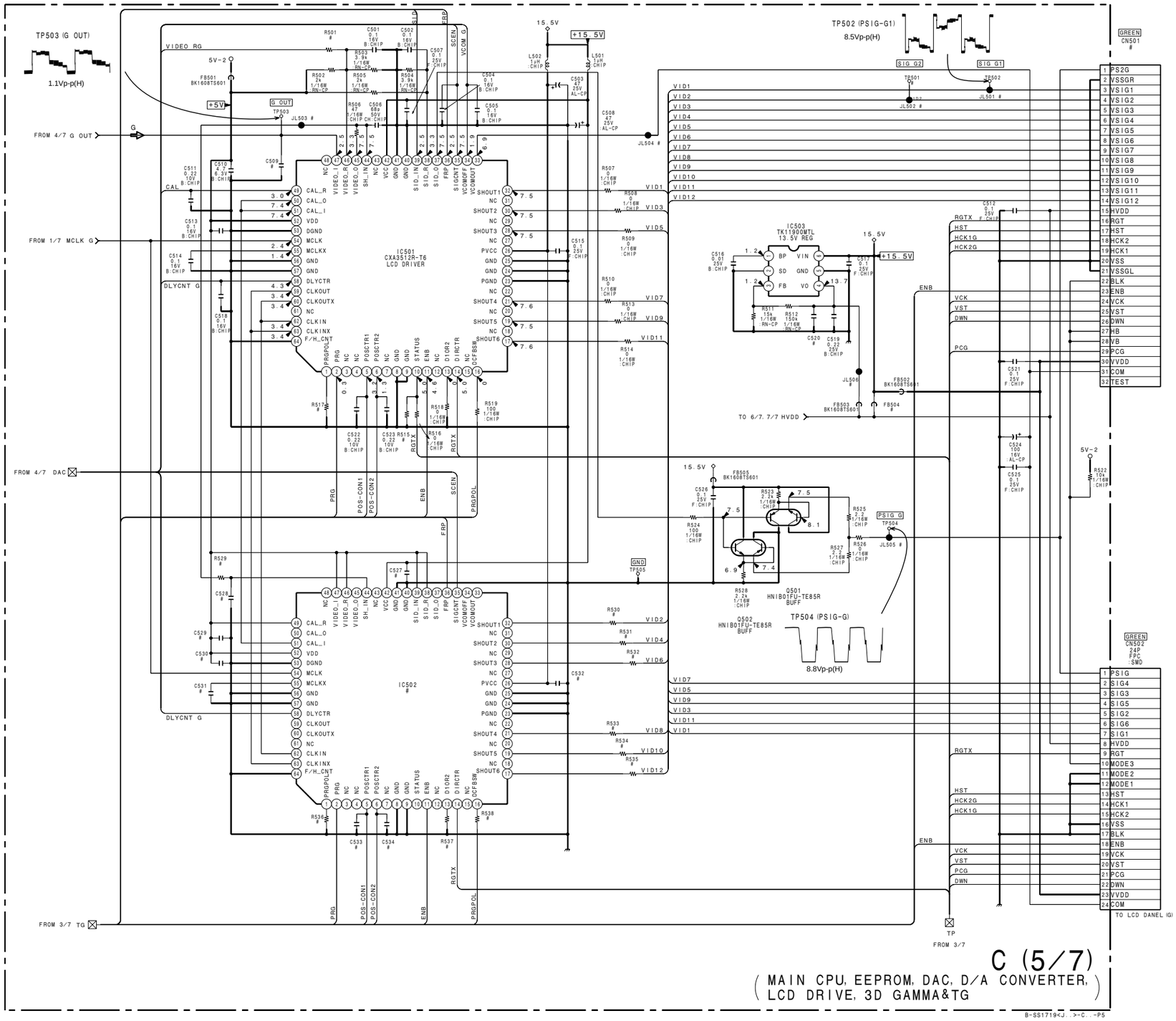

 7-21

 C (6/7)

- **Refer to page 7-15 for Printed Wiring Board**
- **Refer to page 7-16 for IC Block Diagrams**

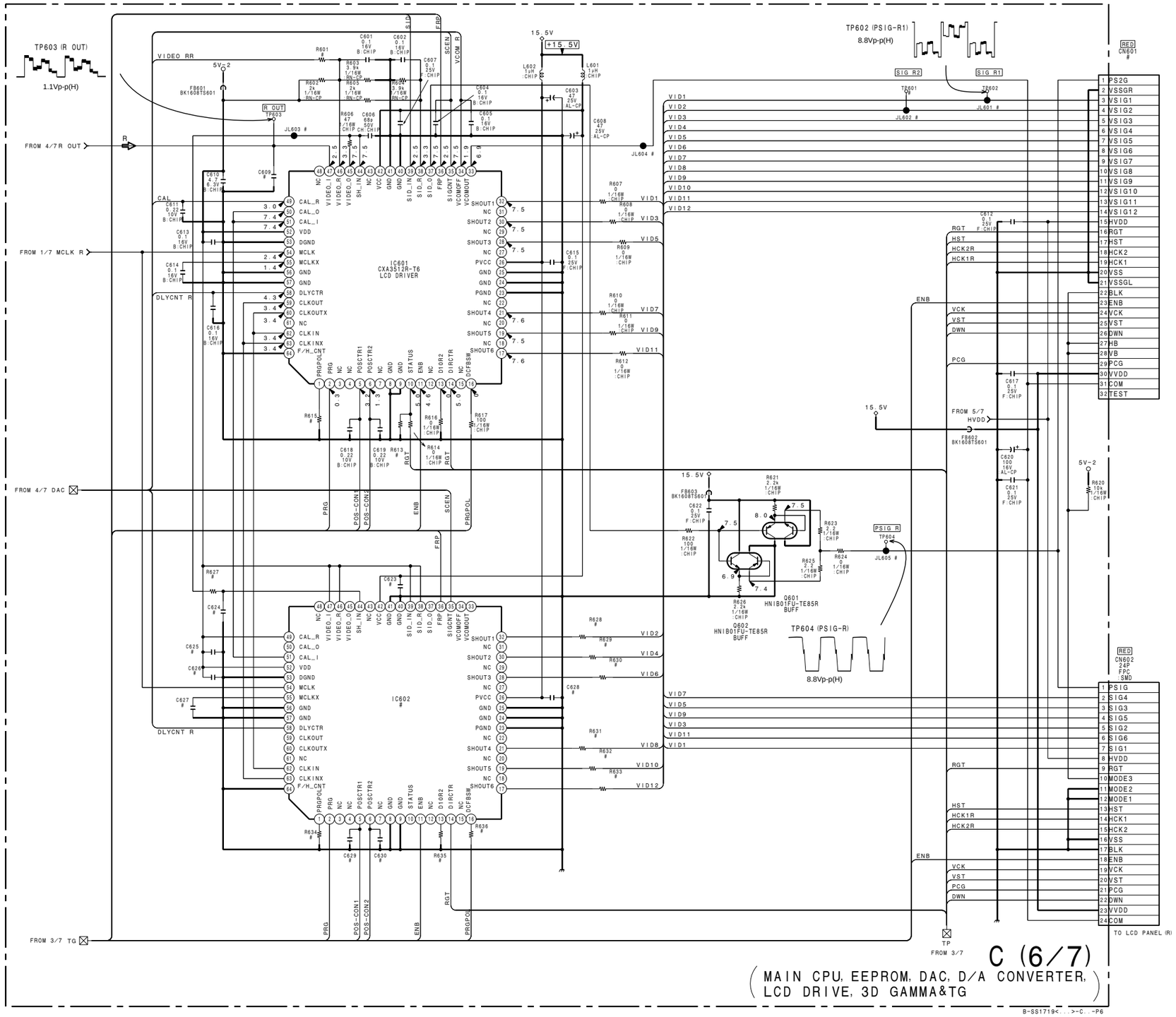

 7-22

- **Refer to page 7-15 for Printed Wiring Board**
- **Refer to page 7-16 for IC Block Diagrams**

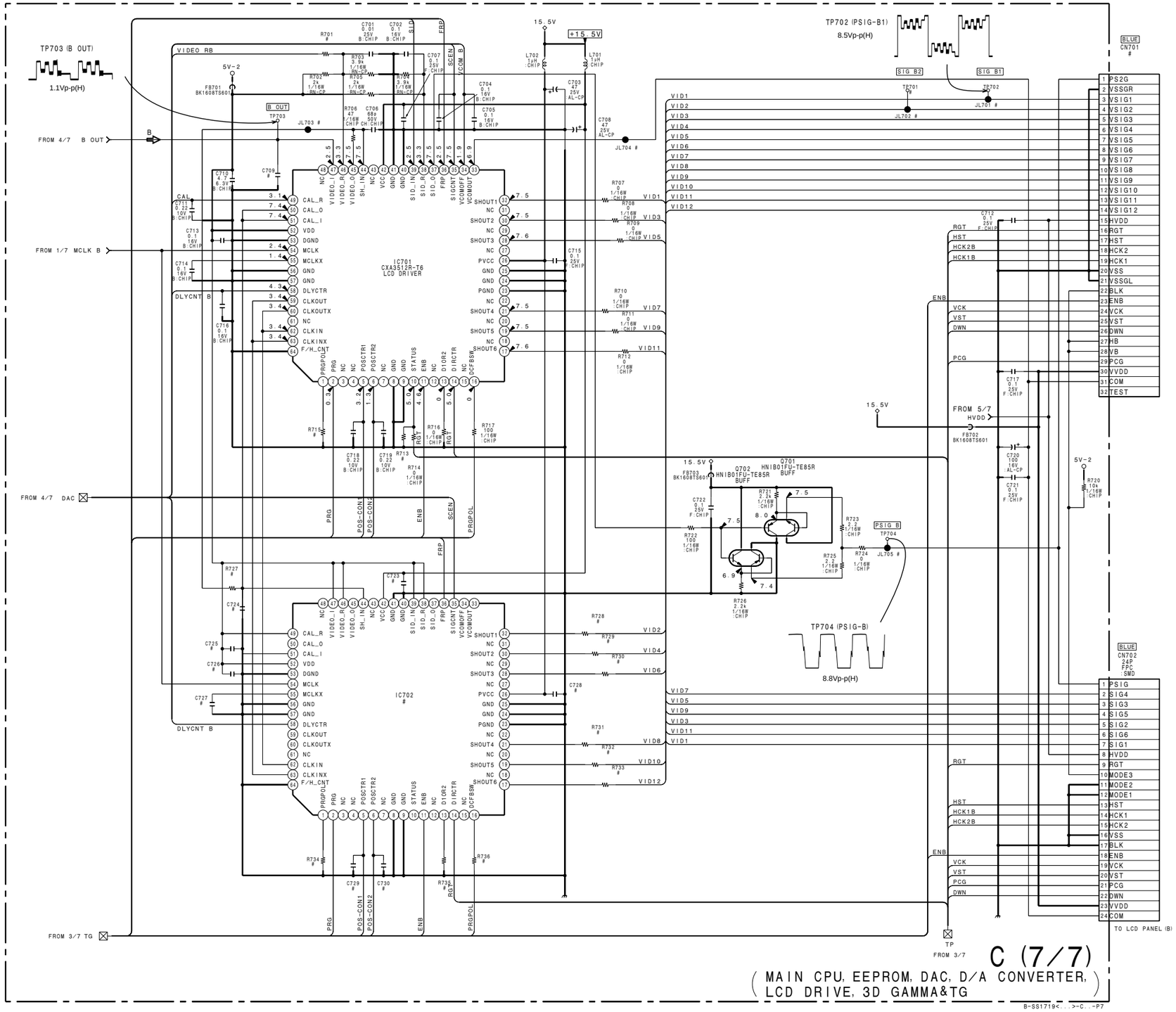

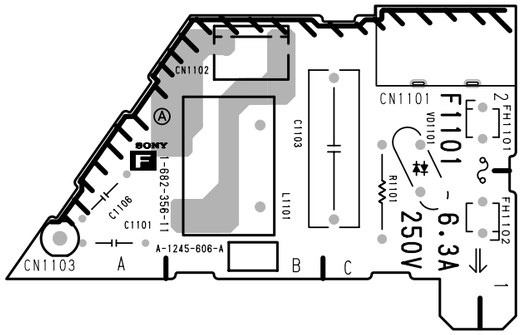

F -A SIDE-
SUFFIX: -11

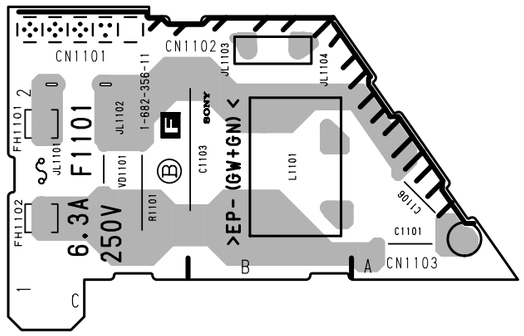

F -B SIDE-
SUFFIX: -11

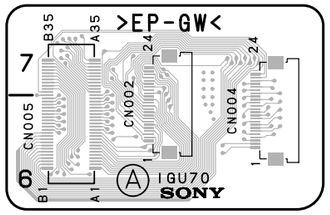

GU -A SIDE-
SUFFIX: -11

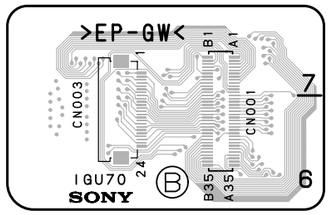

GU -B SIDE-
SUFFIX: -11

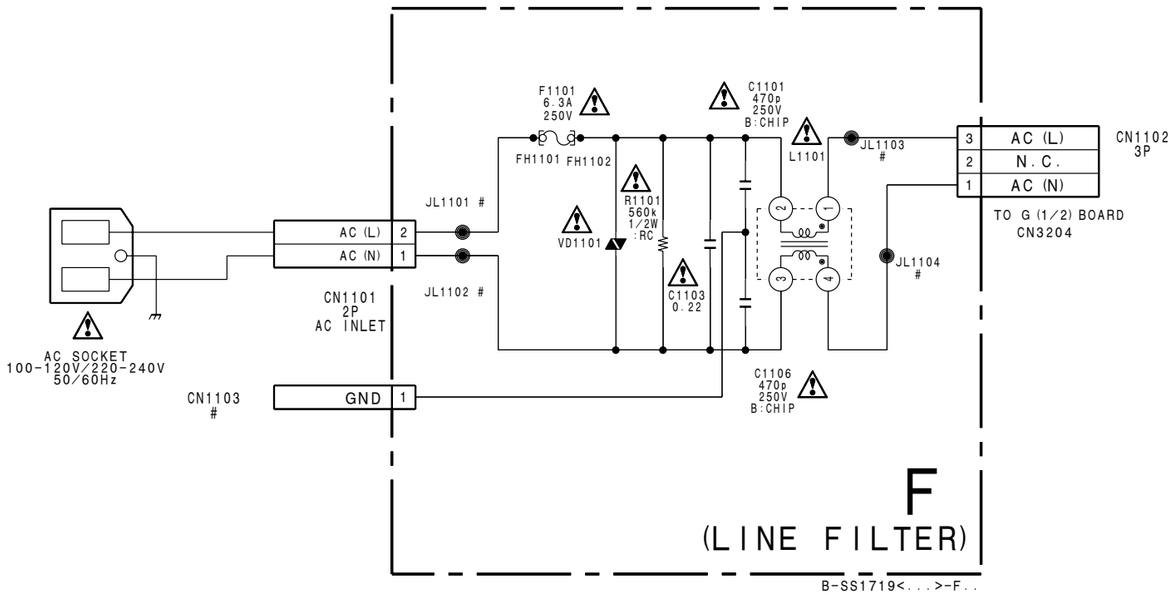

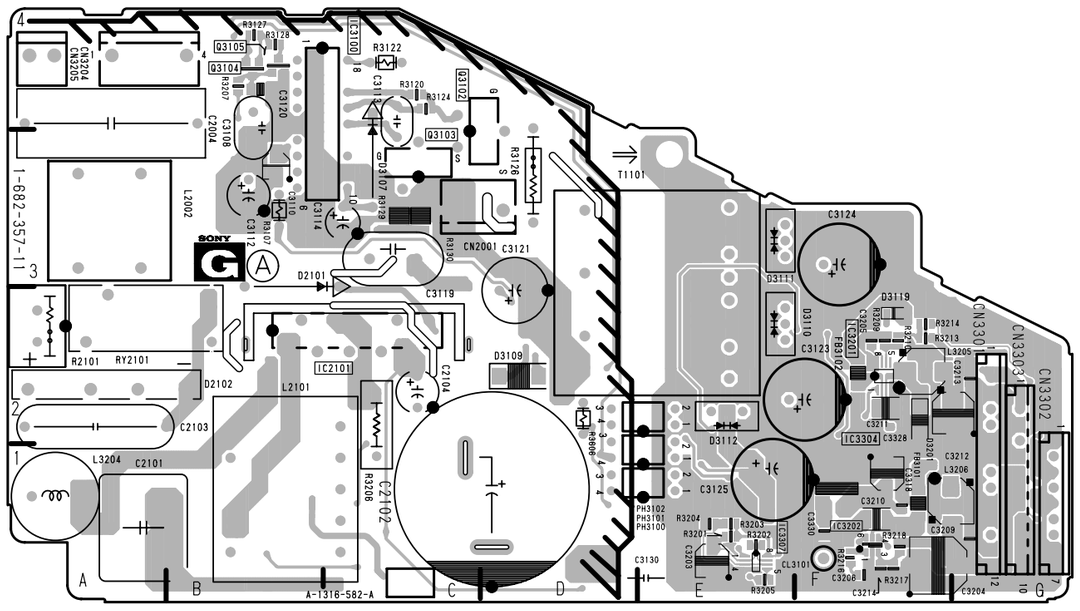

G -A SIDE-
SUFFIX: -11

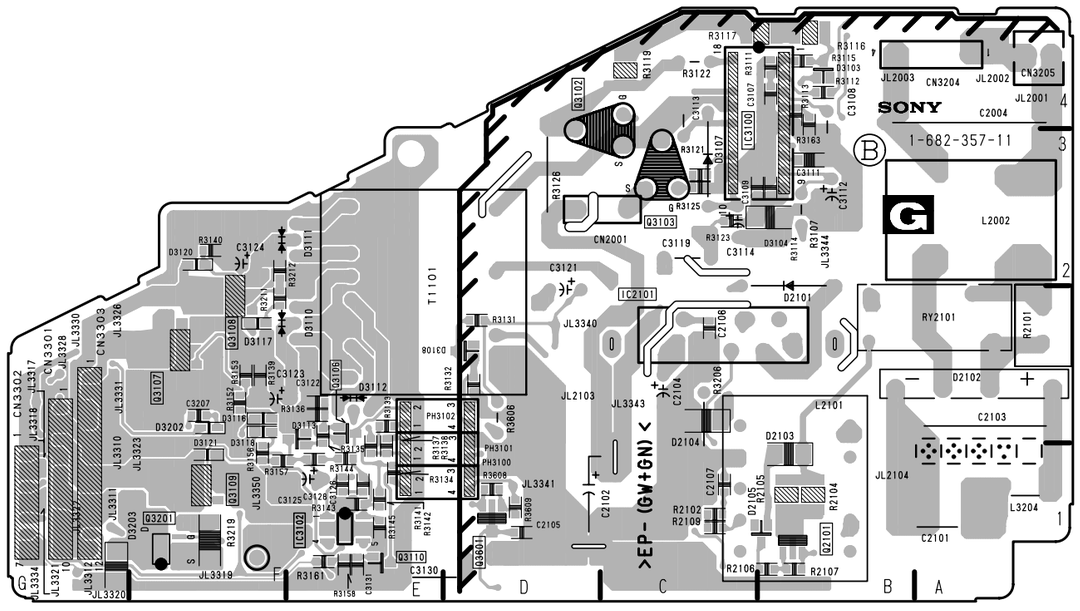

G -B SIDE-
SUFFIX: -11

MZ1540 (IC2101)

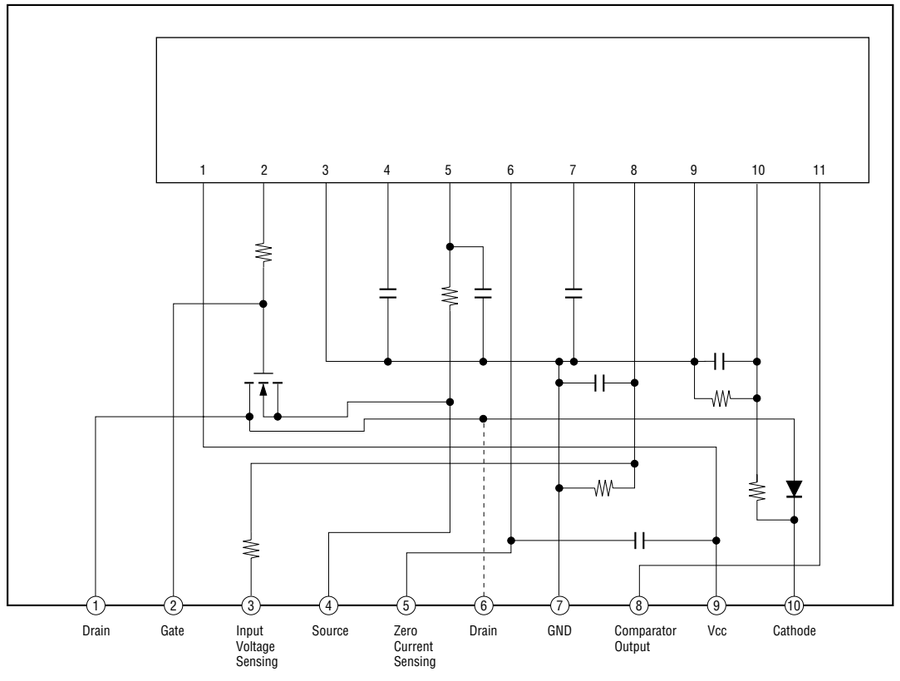

TL431BCDR2 (IC3102)

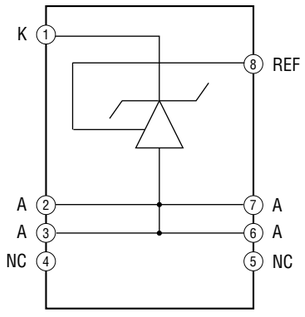

G

1-687-357-11

D2101	B-2
D2102	A-2
D2103	*B-1
D2104	*C-2
D2105	*B-1
D3103	*B-4
D3104	*B-3
D3107	C-3
D3108	*D-2
D3109	D-2
D3110	E-2
D3111	E-3
D3112	E-2
D3113	*E-2
D3116	*F-2
D3117	*F-2
D3118	F-2
D3119	F-2
D3120	*F-3
D3121	*F-1
D3201	F-2
D3202	*F-2
D3203	*G-1

IC2101	C-2
IC3100	C-4
IC3102	*E-1
IC3201	F-2
IC3202	F-1
IC3304	F-1
IC3307	E-1
Q2101	*B-1
Q3102	D-2
Q3103	C-3
Q3104	B-4
Q3105	B-4
Q3106	*E-2
Q3107	*F-2
Q3108	*F-2
Q3109	*F-1
Q3110	*E-1
Q3201	*F-1
Q3601	*D-1

*:B Side mount

- **Refer to page 7-25 for Printed Wiring Board**
- **Refer to page 7-25 for IC Block Diagrams**

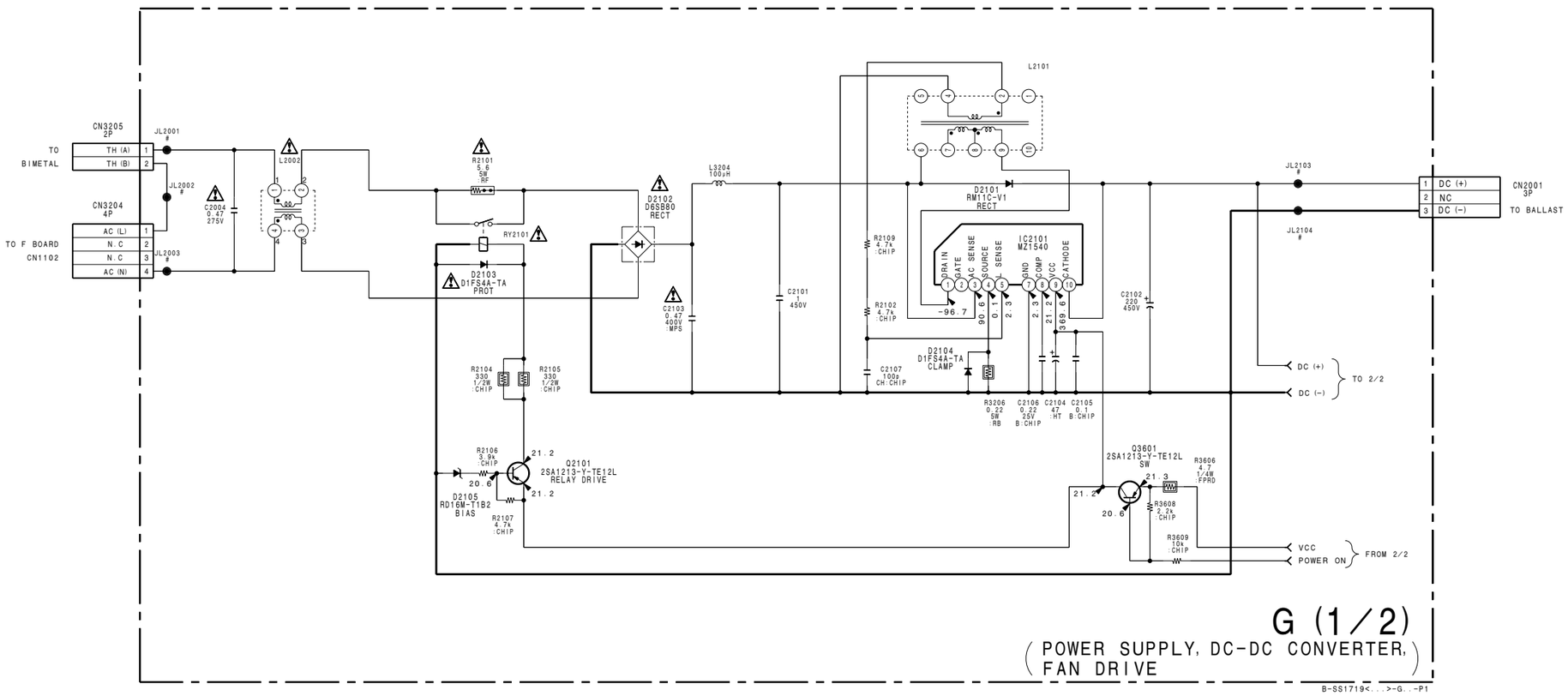

- **Refer to page 7-25 for Printed Wiring Board**
- **Refer to page 7-25 for IC Block Diagrams**

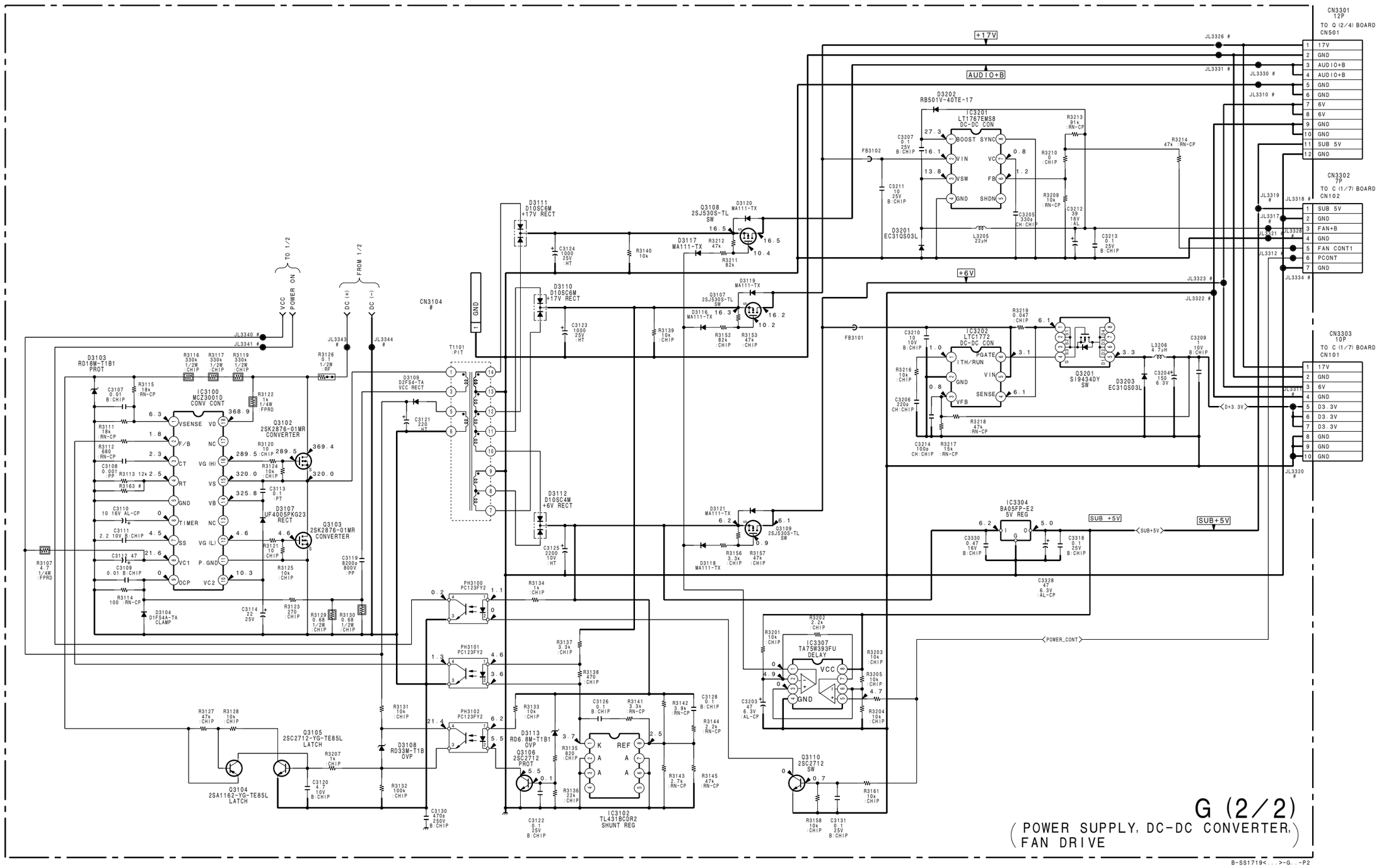

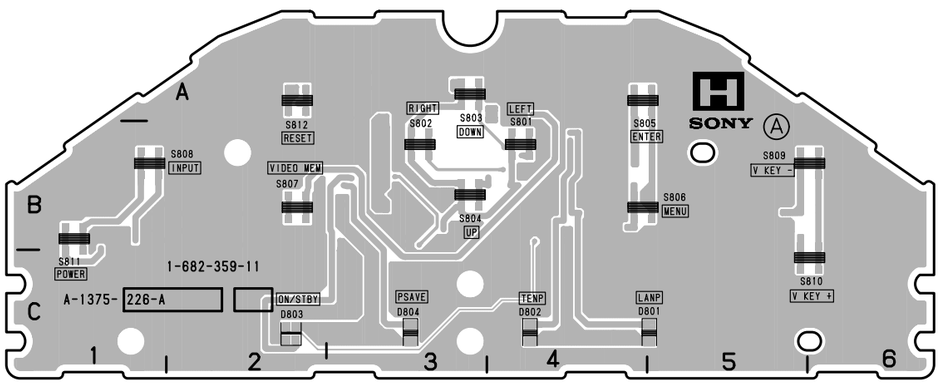

H -A SIDE-
SUFFIX: -11

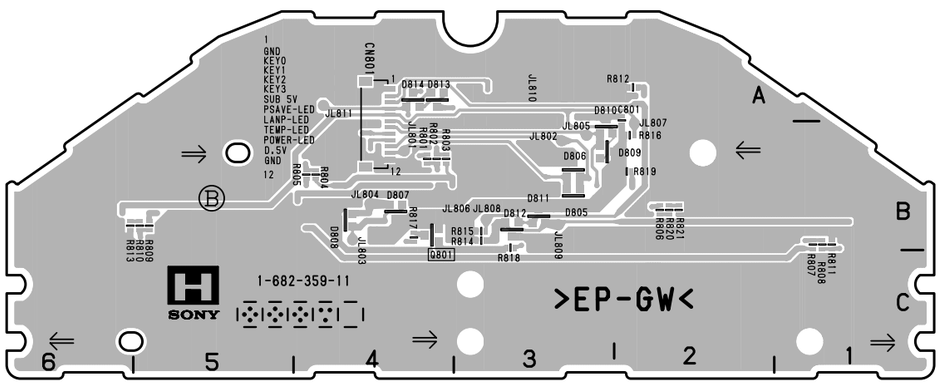

H -B SIDE-
SUFFIX: -11

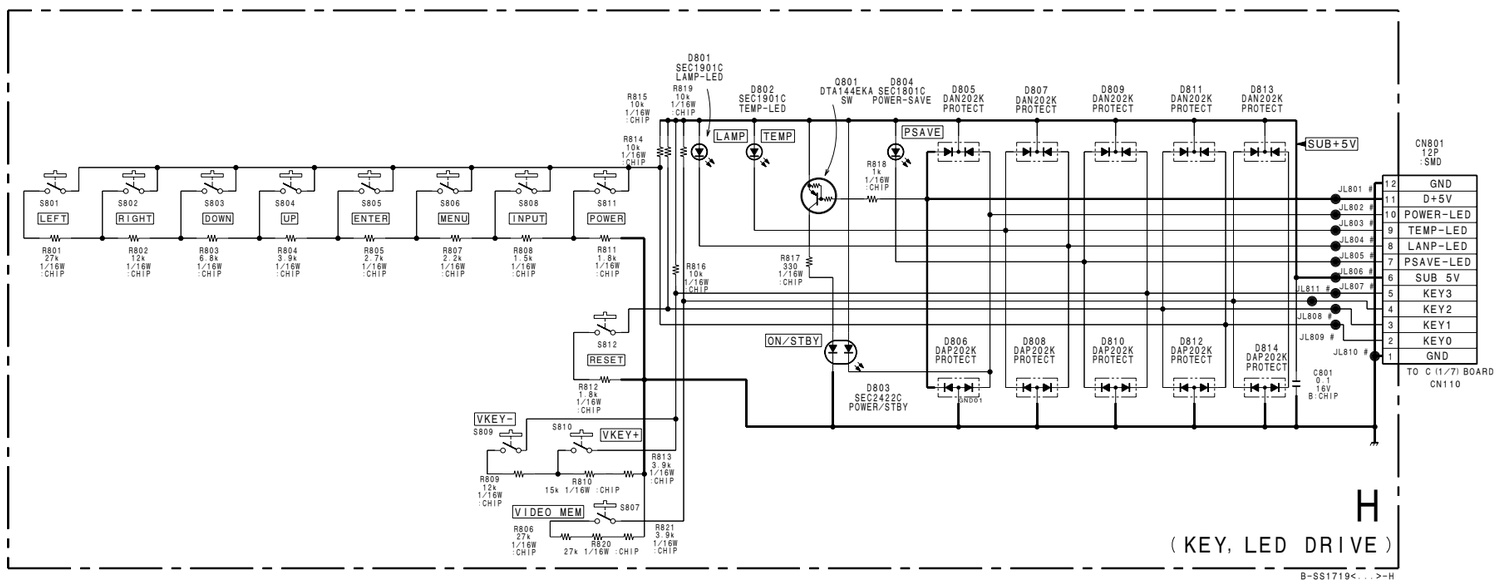

-
H
-
1-682-359-11

D801	C-5
D802	C-4
D803	C-2
D804	C-3
D805	B-3
D806	B-3
D807	B-4
D808	B-4
D809	B-3
D810	A-3
D811	B-3
D812	B-3
D813	A-4
D814	A-4
Q801	B-4

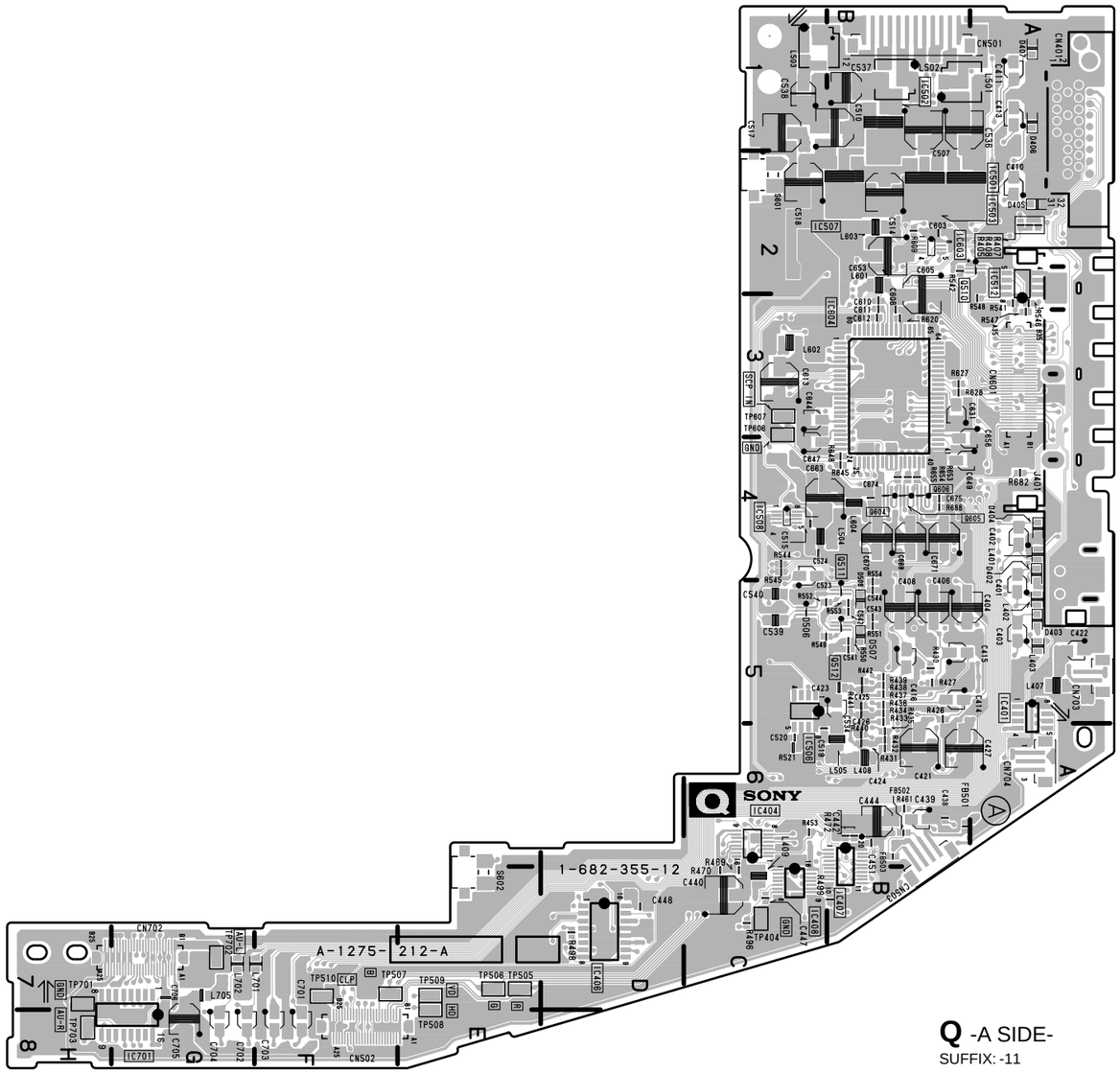

Q -A SIDE-
SUFFIX: -11

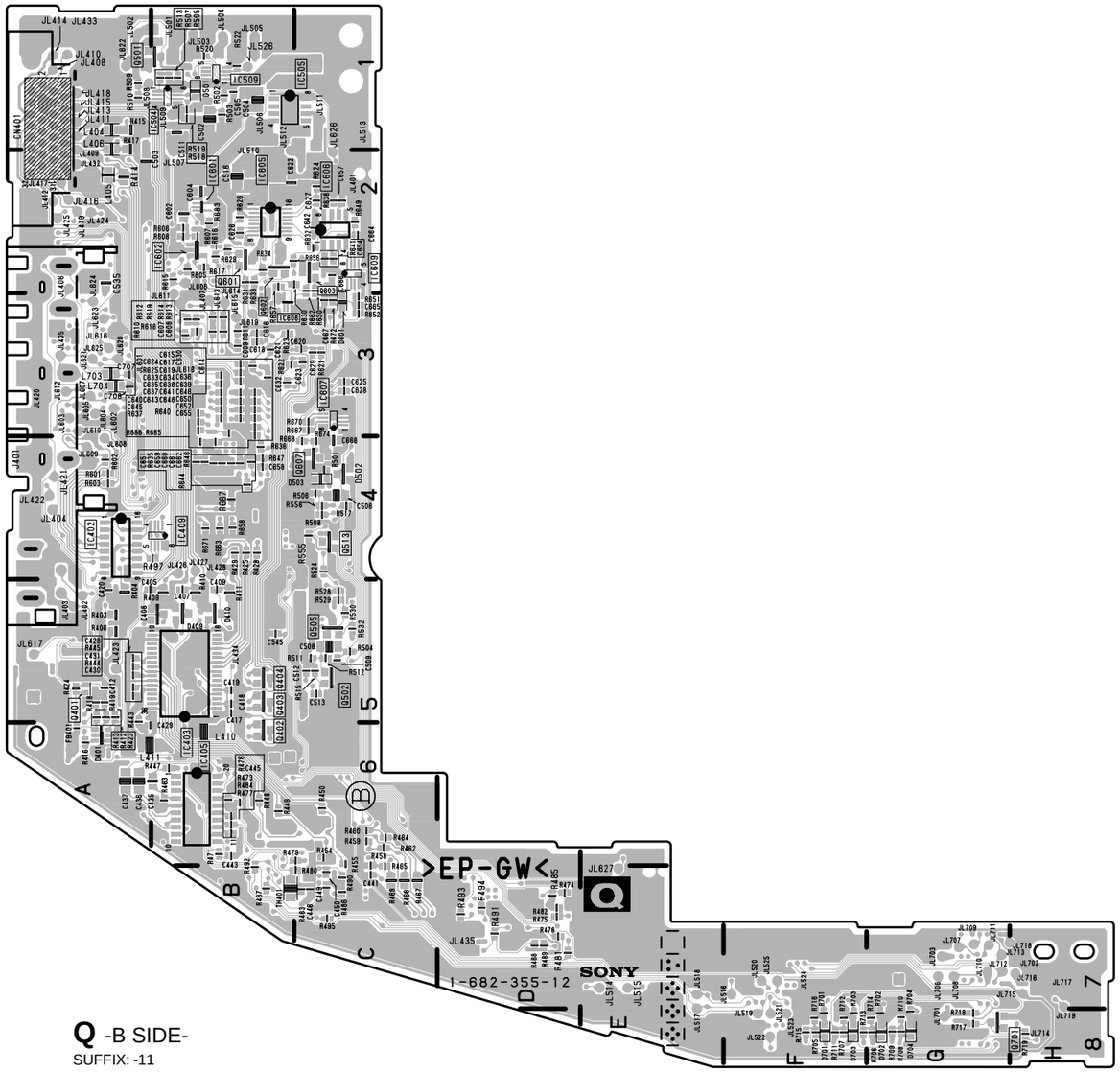

Q -B SIDE-
SUFFIX: -11

—
Q
—
1-682-355-12

D401	*A-6	IC408	C-7	D508	B-5	IC603	B-2	Q502	B-5	TP404	C-7
D402	A-4	IC409	B-4	D601	C-3	IC604	B-3	Q505	B-5	TP505	E-7
D403	A-5	IC501	B-2	D701	F-8	IC605	B-2	Q510	A-2	TP506	E-7
D404	A-4	IC502	B-1	D702	G-8	IC606	C-2	Q511	B-5	TP507	F-7
D405	A-2	IC503	B-2	D703	F-8	IC607	C-3	Q512	B-5	TP508	E-7
D406	A-1	IC504	B-1	D704	G-8	IC608	B-3	Q513	C-4	TP509	E-7
D407	A-1	IC504	B-1			IC609	C-2	Q601	B-2	TP510	F-7
D408	B-5	IC506	C-5	IC401	A-5	IC701	G-8	Q602	B-2	TP607	C-3
D409	F-7	IC507	B-2	IC402	A-4			Q603	C-2	TP701	H-7
D410	F-7	IC508	C-4	IC403	A-5	Q401	A-5	Q604	B-4	TP702	G-7
D501	B-1	IC509	B-1	IC404	C-6	Q402	B-6	Q605	B-4	TP703	H-8
D506	C-5	IC512	A-2	IC405	B-6	Q403	B-5	Q606	B-4		
D507	B-5	IC601	B-2	IC406	D-7	Q404	B-5	Q607	C-4	*:B Side mount	
		IC602	B-2	IC407	B-6	Q501	B-1	Q701	G-8		

M52347FP (IC405)

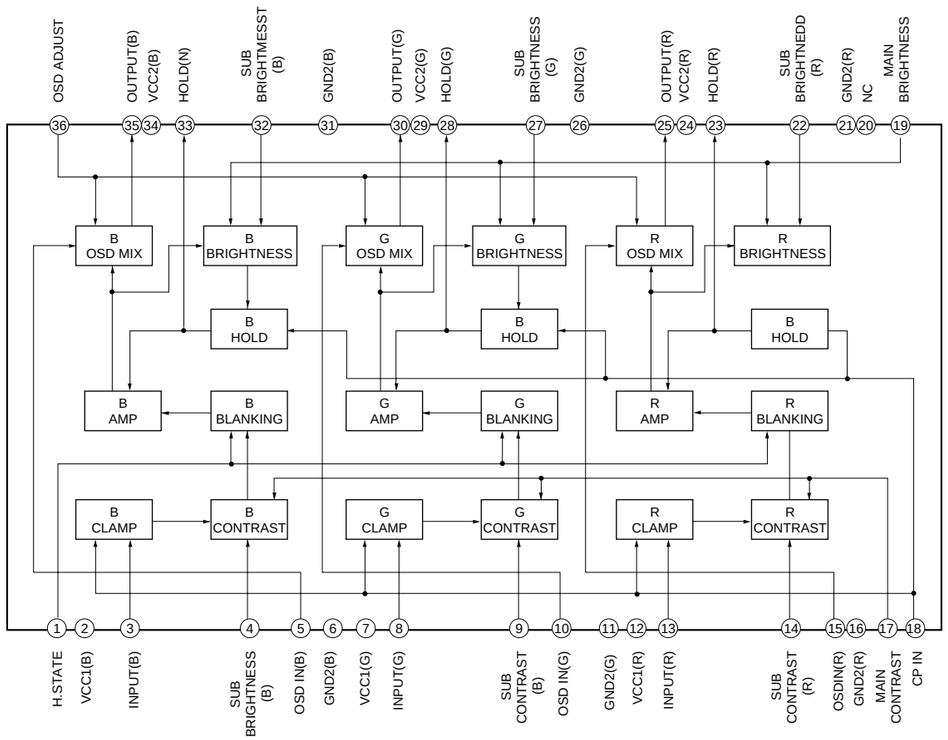

CXA1875AX (IC406)

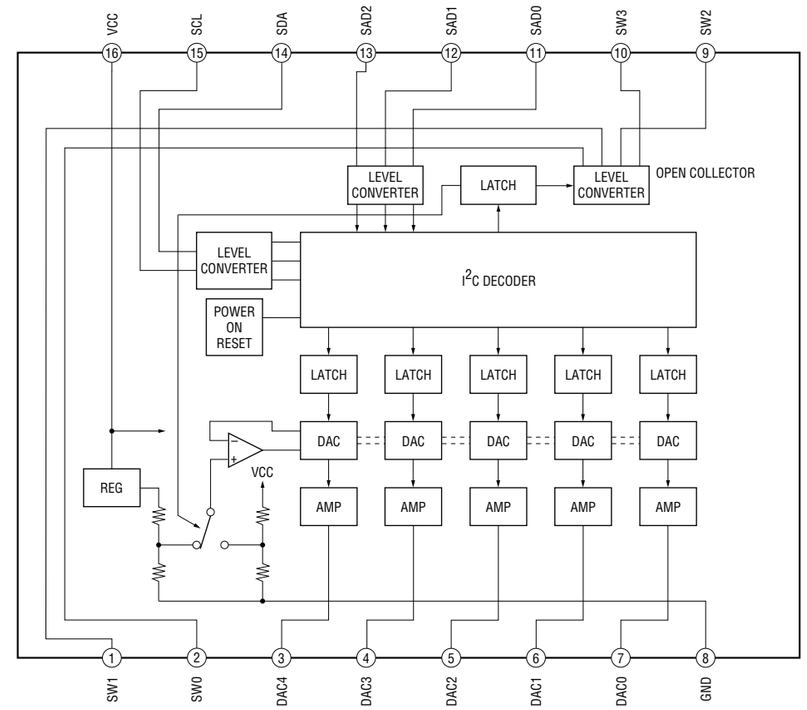

74VHC240MTCX (IC407)

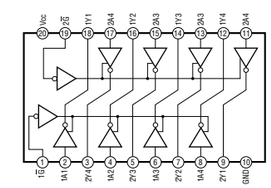

74VHC221AMTCX (IC408)

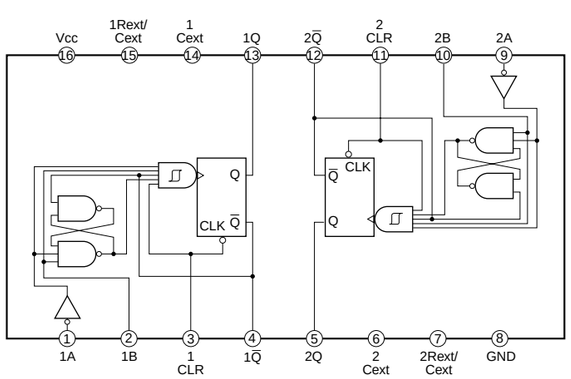

24LC21AT/SN (IC401)

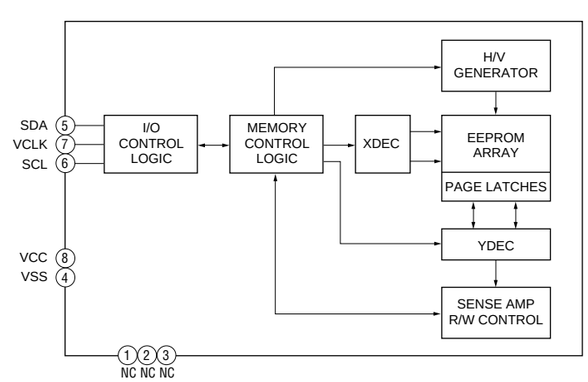

M52758FP (IC403)

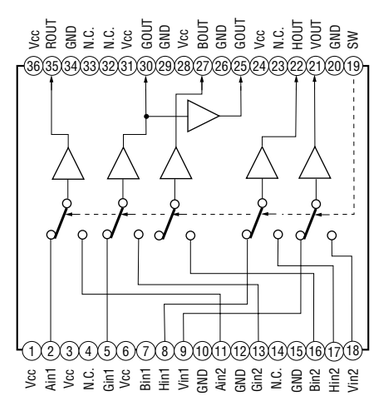

TC4053BF (IC701)

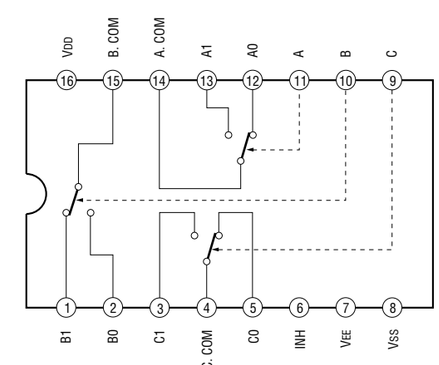

 Q (1/4)

- **Refer to page 7-29 for Printed Wiring Board**
- **Refer to page 7-30 for IC Block Diagrams**

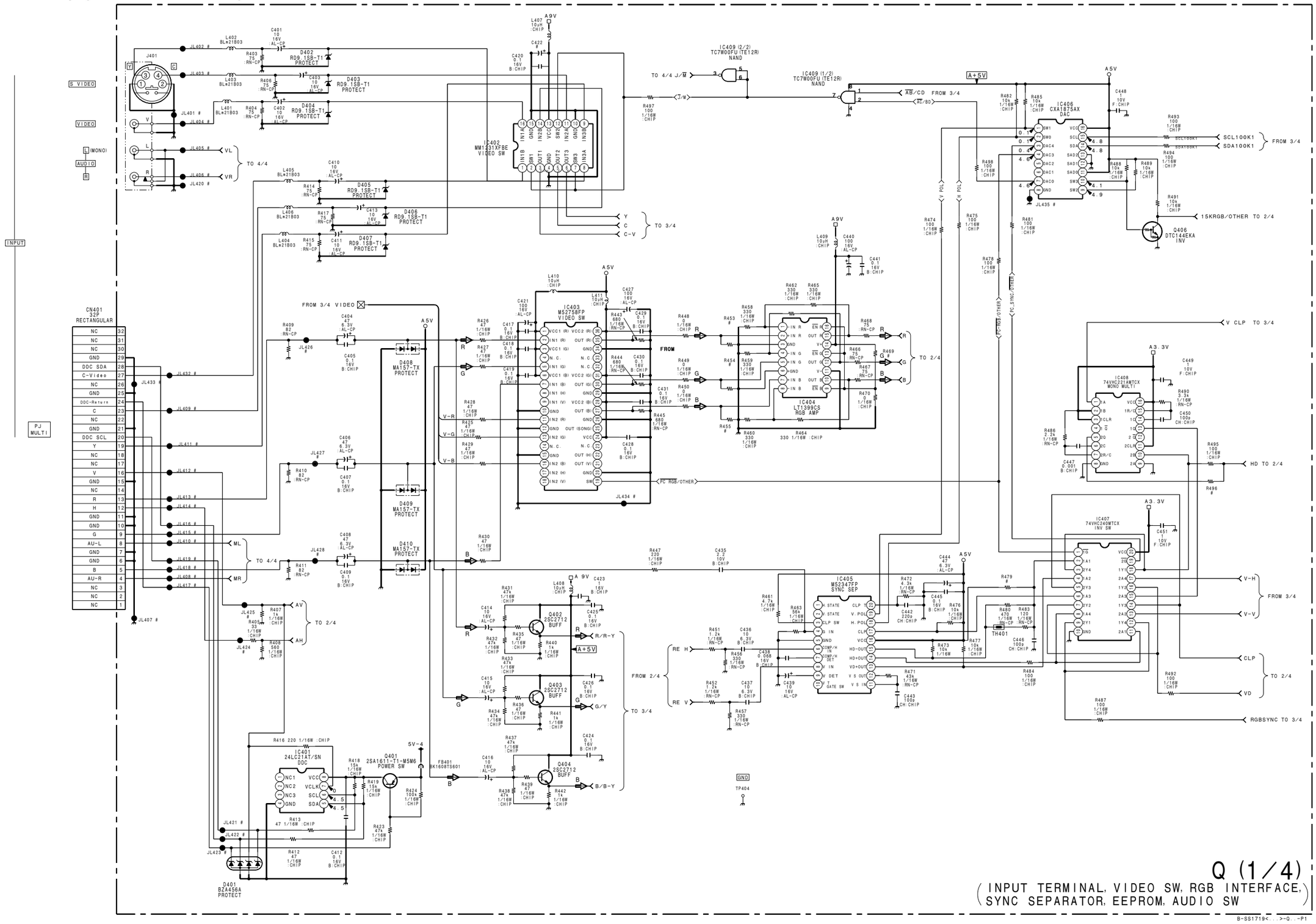

 7-31

 Q (2/4)

- **Refer to page 7-29 for Printed Wiring Board**
- **Refer to page 7-30 for IC Block Diagrams**

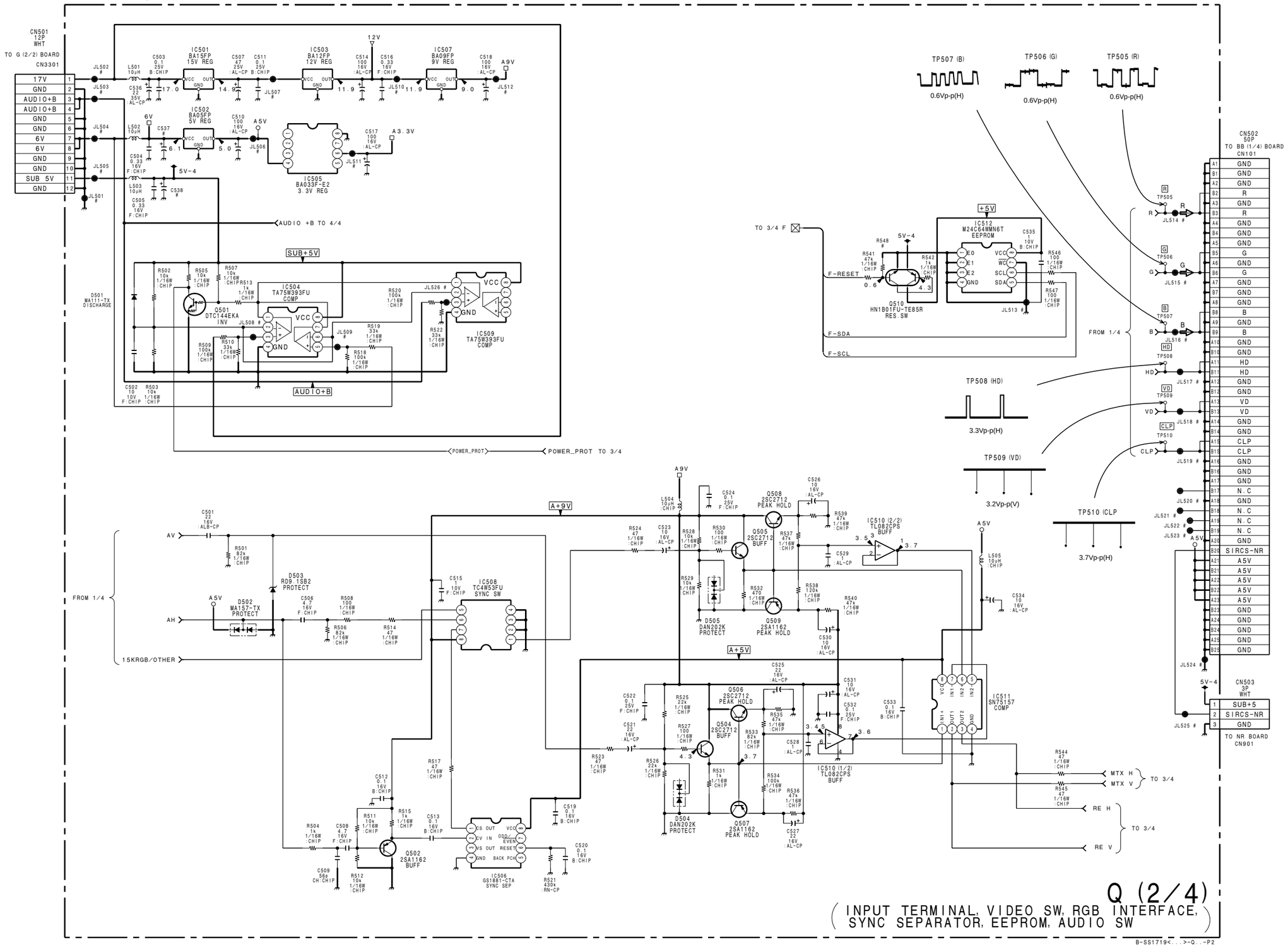

 7-32

 Q (2/4)

- **Refer to page 7-29 for Printed Wiring Board**
- **Refer to page 7-30 for IC Block Diagrams**

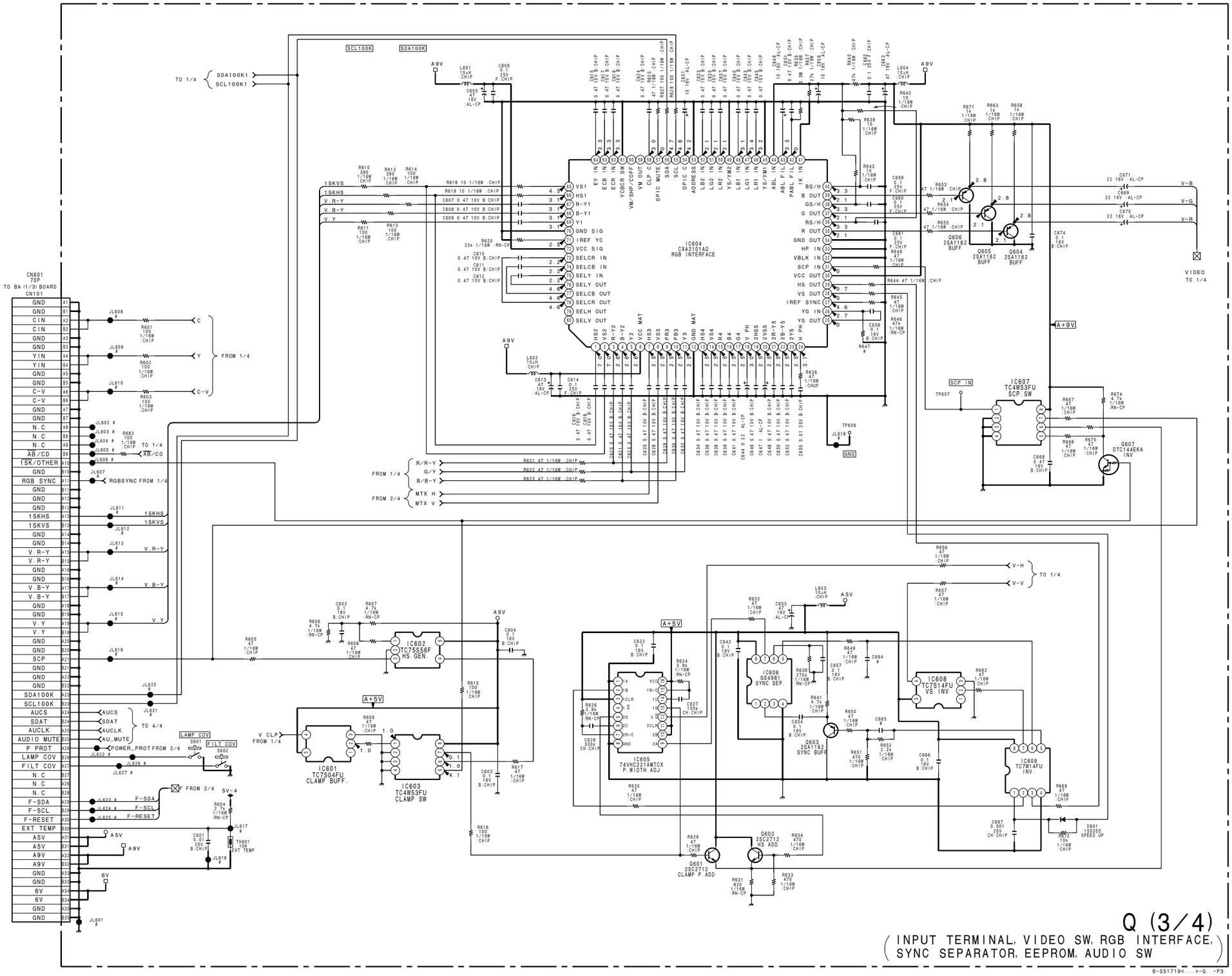

 Q (4/4)

- **Refer to page 7-29 for Printed Wiring Board**
- **Refer to page 7-30 for IC Block Diagrams**

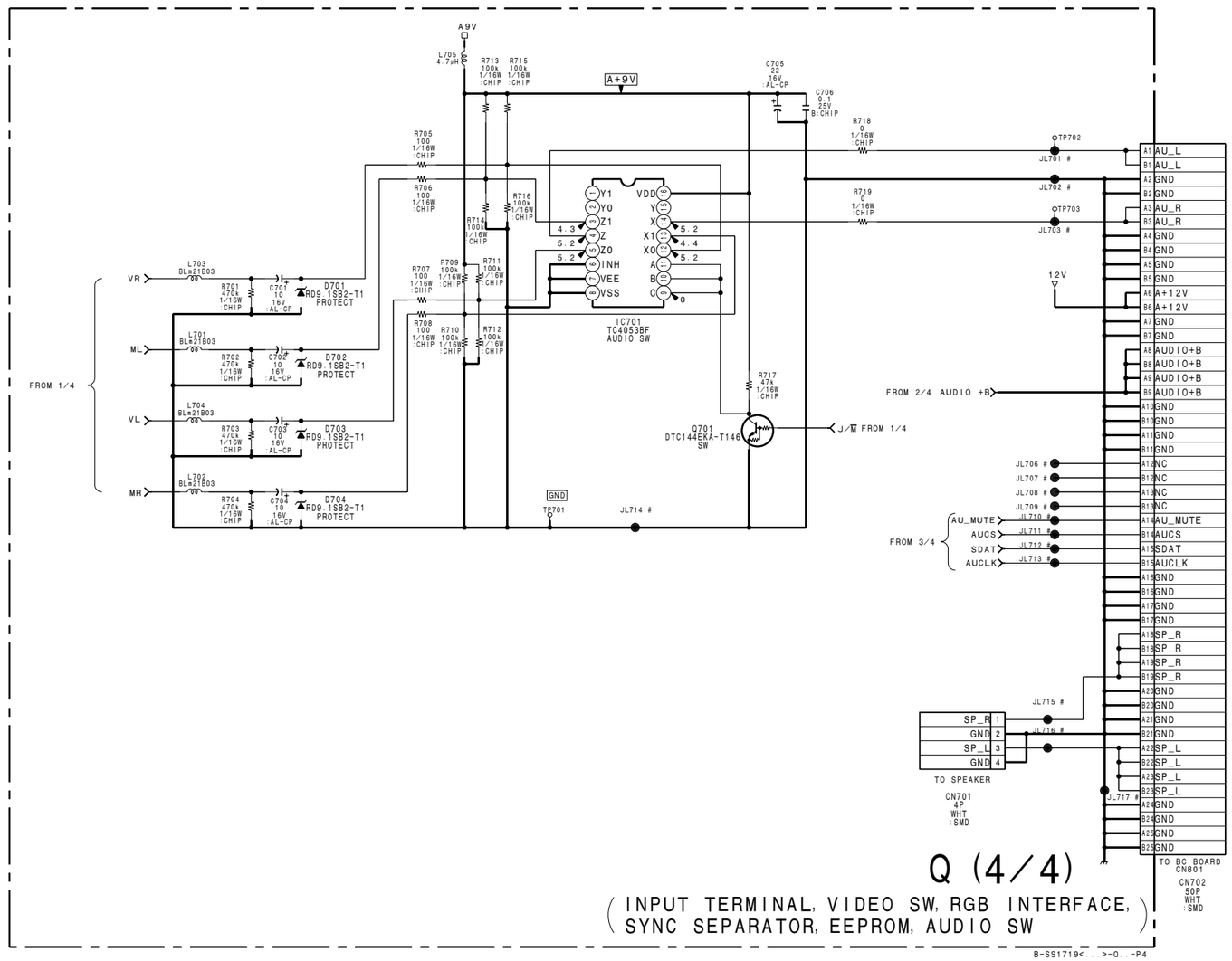

 7-34

 NF, NR

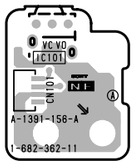

NF -A SIDE-
SUFFIX: -11

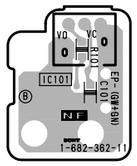

NF -B SIDE-
SUFFIX: -11

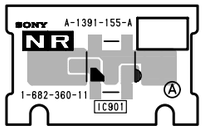

NR -A SIDE-
SUFFIX: -11

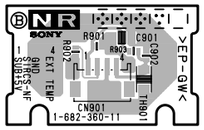

NR -B SIDE-
SUFFIX: -11

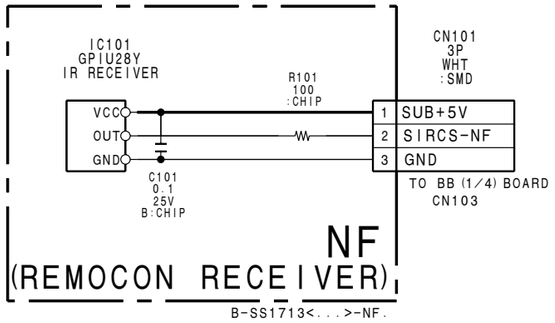

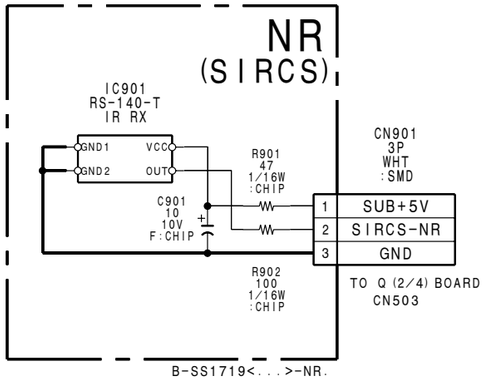

 7-35

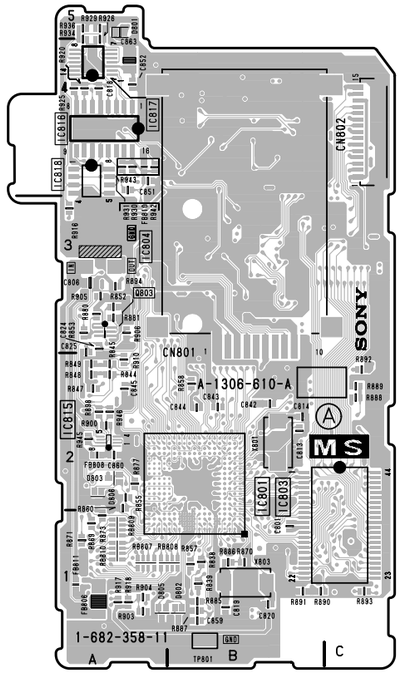

MS -A SIDE-
SUFFIX: -11

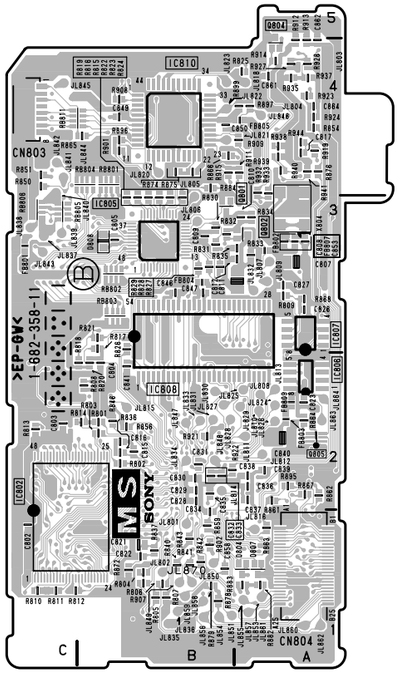

MS -B SIDE-
SUFFIX: -11

TC7WH74FK (IC815)

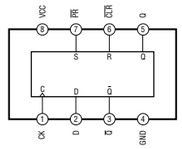

—-
MS
—-
1-682-358-11

D801	A-4
D805	A-1
D806	A-2
D807	∗A-1
D808	∗B-3
IC801	B-2
IC802	∗C-1
IC803	C-1
IC804	A-3
IC805	∗B-3
IC806	∗A-2
IC807	∗A-3
IC808	∗B-3
IC810	B-4
IC815	A-2
IC816	A-4
IC817	A-4
IC818	A-4
Q801	∗B-3
Q802	∗A-3
Q803	A-3
Q804	∗A-4
Q805	∗A-2
TP801	B-1

∗:B Side mount

- Refer to page 7-35 for Printed Wiring Board
- Refer to page 7-35 for IC Block Diagram

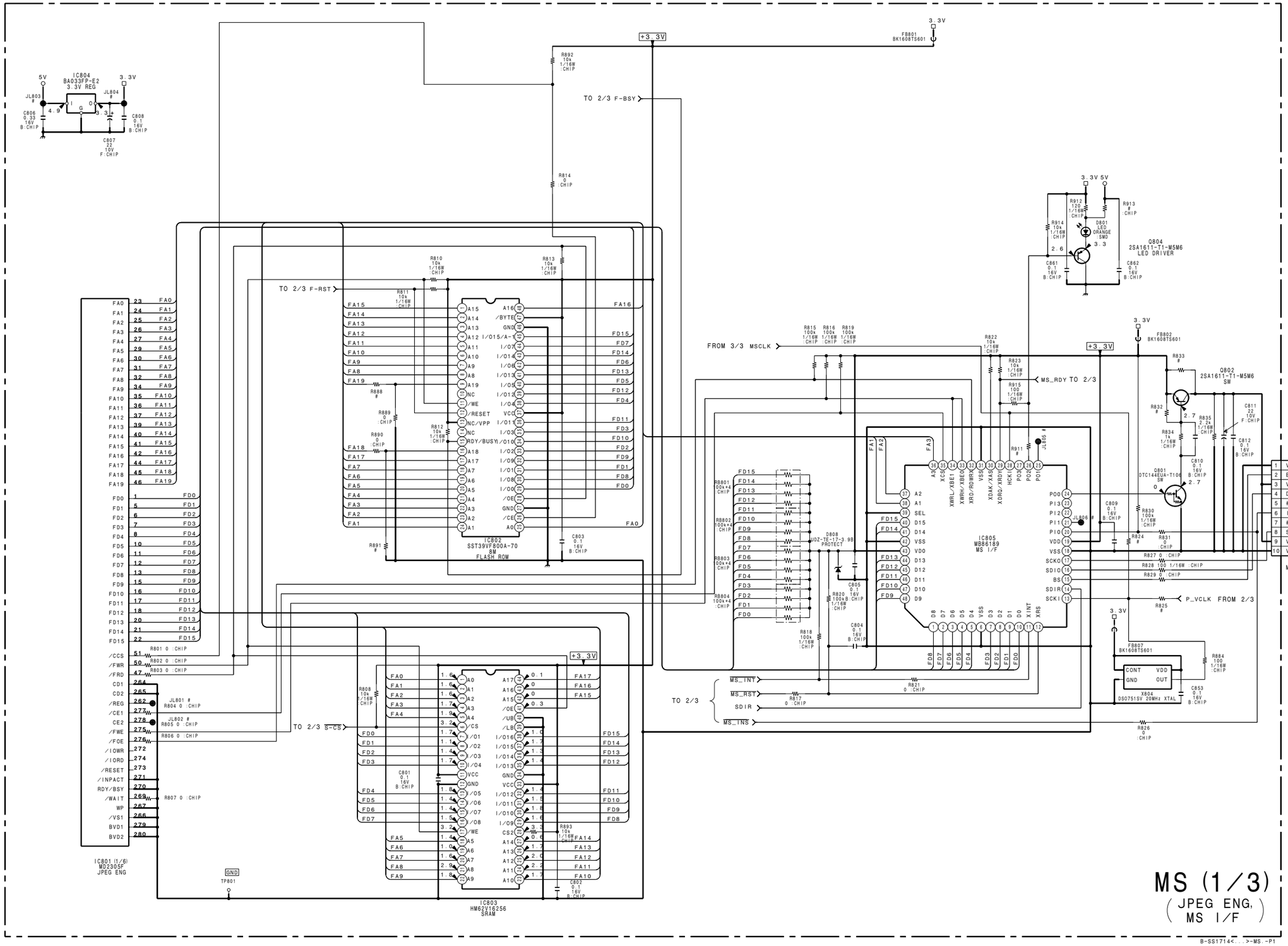

- Refer to page 7-35 for Printed Wiring Board
- Refer to page 7-35 for IC Block Diagram

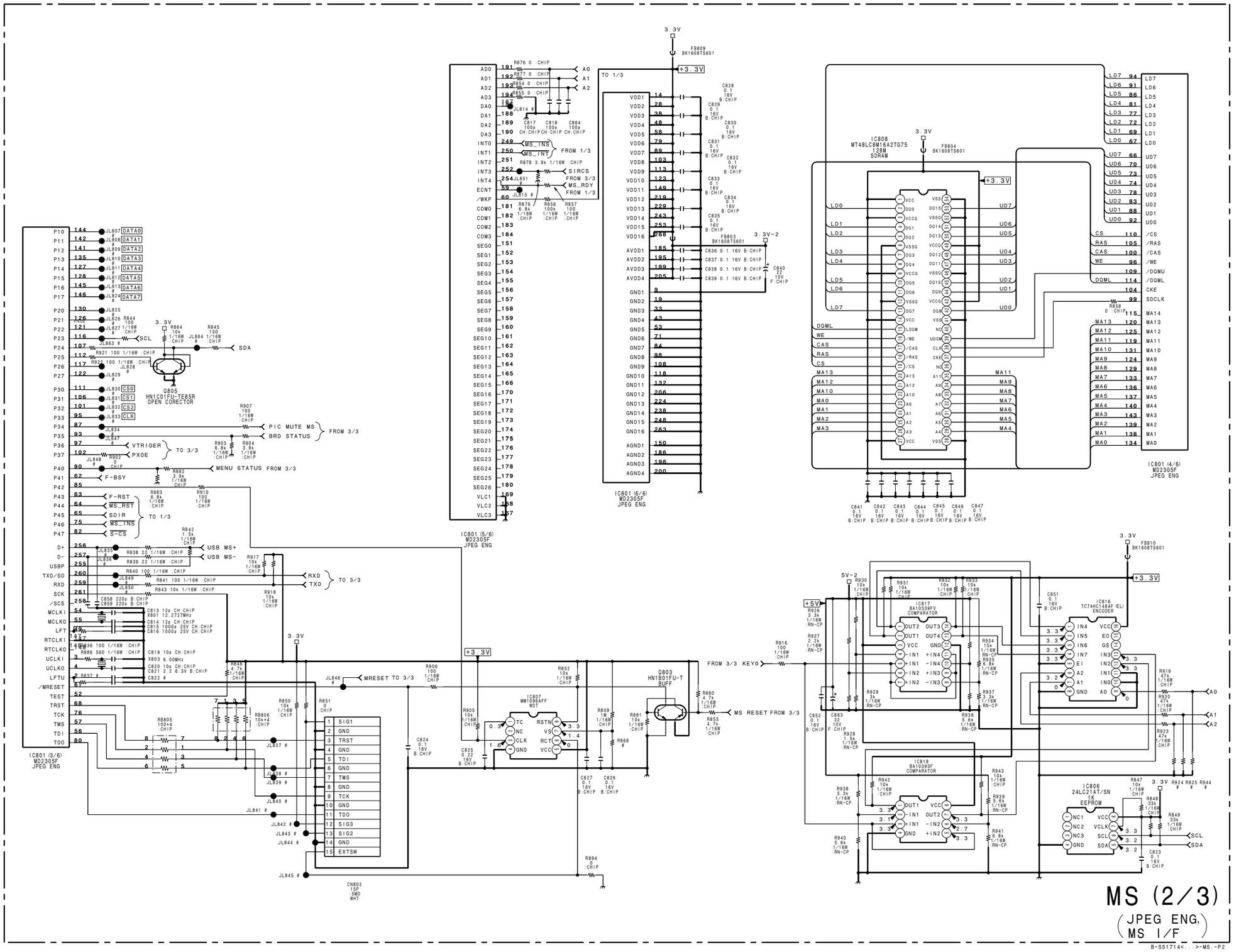

 MS (3/3)

- **Refer to page 7-35 for Printed Wiring Board**
- **Refer to page 7-35 for IC Block Diagram**

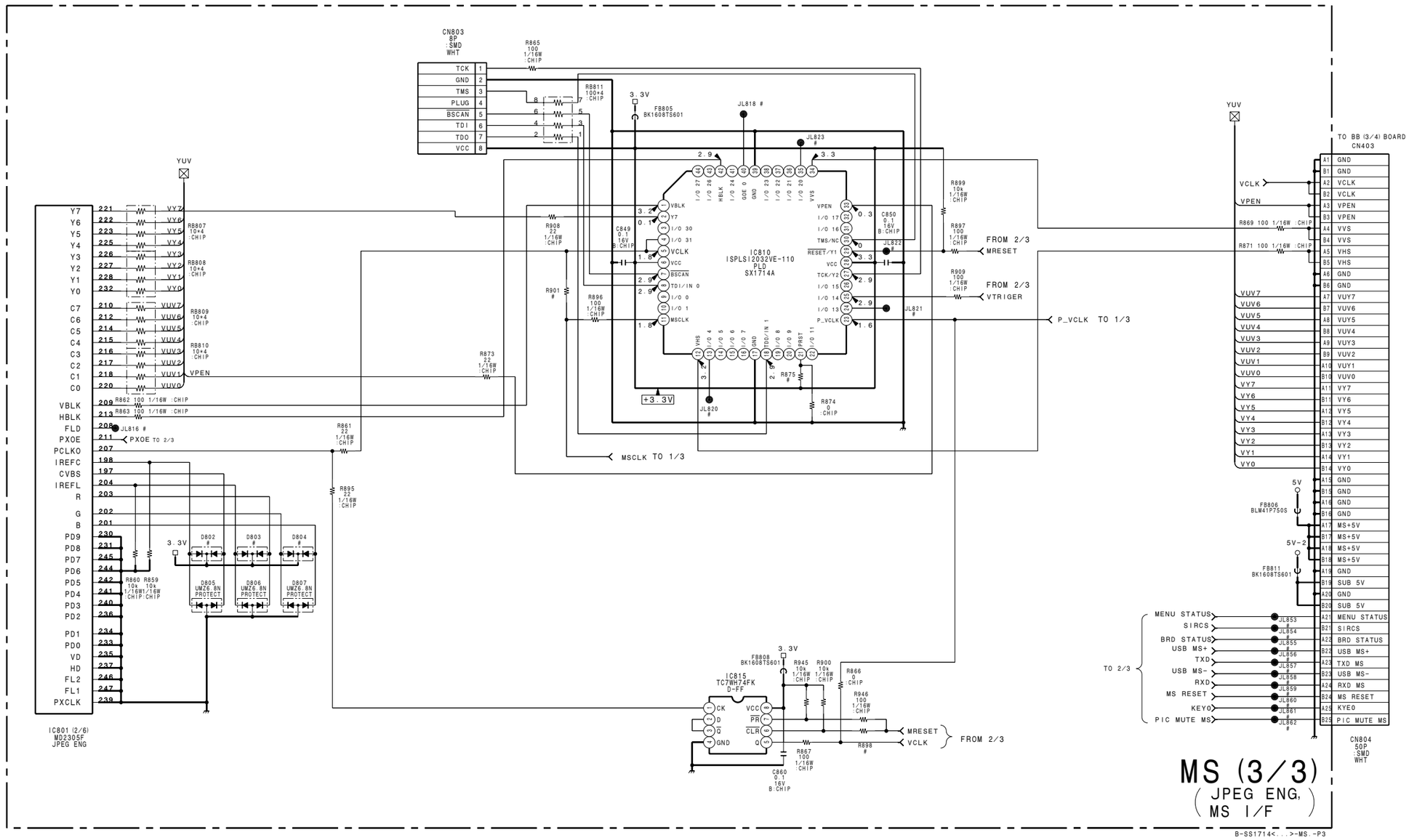

 7-39

SAFETY CHECK-OUT

After correcting the original service problem, perform the following safety checks before releasing the set to the customer :

Check the metal trim, “metallized” knobs, screws, and all other exposed metal parts for AC leakage. Check leakage as described below.

LEAKAGE TEST

The AC leakage from any exposed metal part to earth ground and from all exposed metal parts to any exposed metal part having a return to chassis, must not exceed 0.5 mA. Leakage current can be measured by any one of three methods.

1. A commercial leakage tester, such as the Simpson 229 or RCA WT-540A. Follow the manufacturers’ instructions to use these instruments.
2. A battery-operated AC milliammeter. The Data Precision 245 digital multimeter is suitable for this job.
3. Measuring the voltage drop across a resistor by means of a VOM or battery-operated AC voltmeter. The “limit” indication is 0.75 V, so analog meters must have an accurate low-voltage scale. The Simpson 250 and Sanwa SH-63Trd are examples of a passive VOM that is suitable. Nearly all battery operated digital multimeters that have a 2 V AC range are suitable. (See Fig. A)

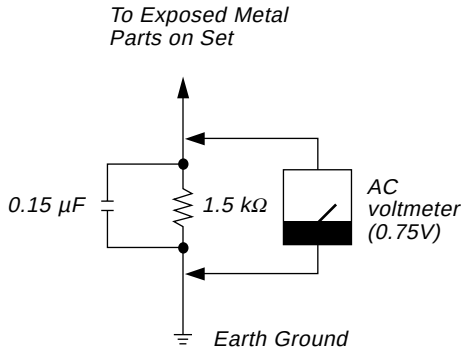

Fig A. Using an AC voltmeter to check AC leakage.

English
Sony Corporation
01HZ08-1
9-870-308-01
B&P Company