# Tele Radio

# SAFETY INSTRUCTIONS

LANGUAGE: ENGLISH (ORIGINAL)

ARTICLE CODE: R00004-03, R00004-08, T00012-07, T00012-52

FCC-IM-TG-RX005-B03-EN

# Thank you for purchasing a Tele Radio product

R00004-03, R00004-08, T00012-07, T00012-52
READ ALL INSTRUCTIONS CAREFULLY BEFORE MOUNTING, INSTALLING AND CONFIGURATING THE PRODUCT.

These instructions are published by Tele Radio AB without any guarantee. These instructions are solely directed towards qualified installers. The information shall not be handed to end users. The instructions may be removed or revised by Tele radio AB at any time and without any further notice. Corrections and additions will be added to the updated versions of the instructions.

The instructions that contain information on the installation and configuration of the remote radio control unit on the machine are not intended to be passed on to the end user. Only such information may be passed on to the end user, that is needed to operate the machine correctly by radio remote control.

Tele Radio AB products are covered by a guarantee against material, construction or manufacturing faults. During the guarantee period, Tele Radio AB may replace the product or faulty parts with new. Work under guarantee must be carried out by Tele Radio AB or by an authorized service centre specified by Tele Radio AB. Make sure that repairs and maintenance are only carried out by qualified personnel. Use only spare parts from Tele Radio AB. Contact your Tele Radio representative if you need support or service.



TELE RADIO AB
Datavägen 21, SE-436 32 Askim. Sweden
Tel: +46-31-748 54 60
Fax: +46-31-68 54 64
www.tele-radio.com.
info@tele-radio.com

# RECEIVER

## TECHNICAL DATA

### Maximum current consumption

| RX MODEL | 12V DC | 24V DC | 48V AC | 230V AC |
|---|---|---|---|---|
| R00004-03 | 280 mA | 140 mA | 140 mA | 20 mA |
| R00004-08 | 500 mA | 240 mA | 230 mA | 50mA |

| | |
|---|---|
| RELAYS: | |
| R00004-03 | 2 safe relays (makes/breaks 16A ACI) + 7 function relays (potential free*,makes/breaks 8A ACI). |
| R00004-08 | 2 safe relays (makes/breaks 16A ACI) + 17 function relays (potential free*,makes/breaks 8A ACI). |
| OPERATING FREQUENCY: | 903.0125-926.9875 MHz. |
| FREQUENCY BANKS: | 15 banks |
| SIZE: | 75 x 126 x 176 mm./ 29.5” x 49.6” x 69.3” |
| WEIGHT: | 1000 grams/ 2.2 lbs. |
| ENCAPSULATION IP CLASS: | IP65 |

* potential free means that you have to supply voltage to get voltage out of a relay (e.g. via a connection comb).

STOP BUTTON TEST
**IMPORTANT!** We recommend that the functionality of the STOP button is being tested at a regular basis: At a minimum, when used for 200 hours. Test the STOP button by pressing and pulling it out.

# RECEIVER TG-R00004-03, TG-R00004-08
# BASE BOARD

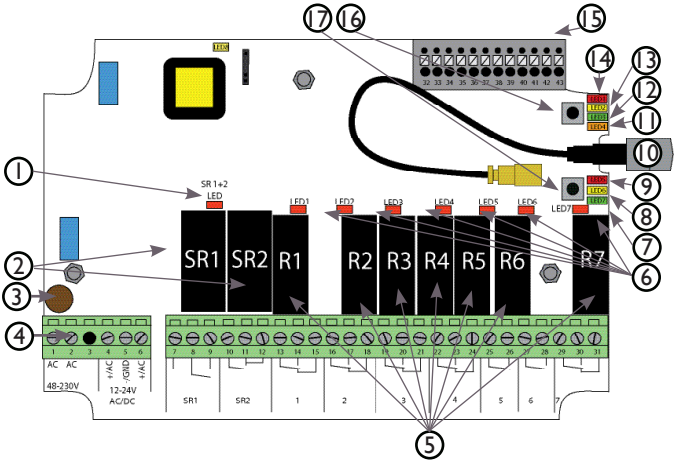


1. Stop relays 1+2 LED (red)
2. Stop relays 1+2
3. Obligatory fuse: 2A (slow), must comply with IEC691/EN60691
4. Terminal block for power supply (see next page)
5. Function relays 1-7
6. Relay LEDs1-7 (red)
7. Function LED 7 (green)
8. Function LED 6 (yellow)
9. Function LED 5 (red)
10. Antenna connector
11. Function LED 4 (orange)
12. Function LED 3 (green)
13. Function LED 2 (yellow)
14. Function LED 1 (red)
15. Terminal block for mixed I/Os
16. Function button (Cancel button)
17. Select button (OK button)

**IMPORTANT!**
Tele Radio remote controls are often built into wider applications. We recommend that the system is provided with a wired emergency stop where necessary.

# TG-R00004-08
# 10 RELAYS EXPANSION BOARD

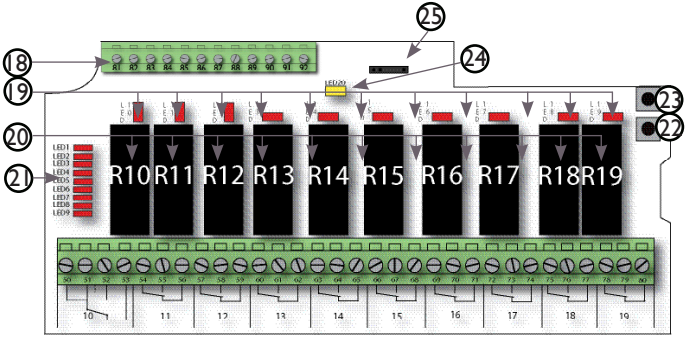


18. Terminal block for digital inputs
19. Relay LEDs 10-19
20. Function relays 10-19
21. Relay LEDs 1-9 (see next page)
22. Select button (OK)
23. Function button (Cancel)
24. Base board communication-LED (yellow)
25. Programming connector

18. Terminal block for digital inputs

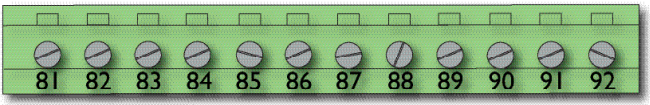


81. GND
82. GND
83. GND
84. GND
85. Digital input 3
86. Digital input 4
87. Digital input 5
88. Digital input 6
89. Digital input 7
90. Digital input 8
91. Digital input 9
92. Digital input 10

## 21. Relay LEDs 1-9

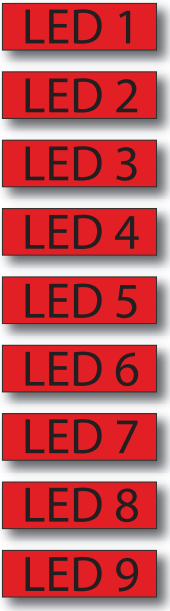


LED 1= function relay 1
LED 2= function relay 2
LED 3= function relay 3
LED 4= function relay 4
LED 5= function relay 5
LED 6= function relay 6
LED 7= function relay 7
LED 8= not used
LED 9= stop relay 1+2

LEDs 1-9 on the expansion board indicate the status of the relays on the base board. When one or more of these LEDs are lit, the corresponding relay on the base board is activated (see list).

4. Input power

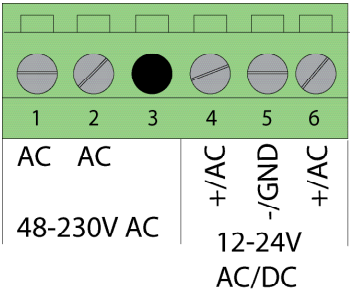


1. 48-230V AC
2. 48-230V AC
3. (not used)
4. 12-24V AC/DC
5. GND
6. 12-24V AC/DC

For DC voltages:
Connect positive voltage to 4 or 6. Connect negative voltage to 5.

15. Terminal block for mixed I/Os

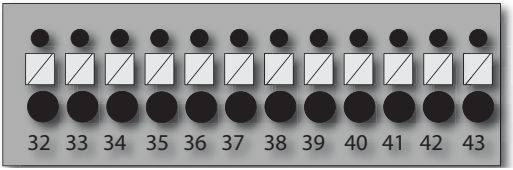


32. +12V DC
33. +5V DC
34. GND
35. GND
36. Digital input 1
37. Buzzer
38. Digital input 2
39. GND
40. +3.3V DC
41. RS485A
42. RS485B
43. GND

## JOYSTICK T00012-07, T00012-52

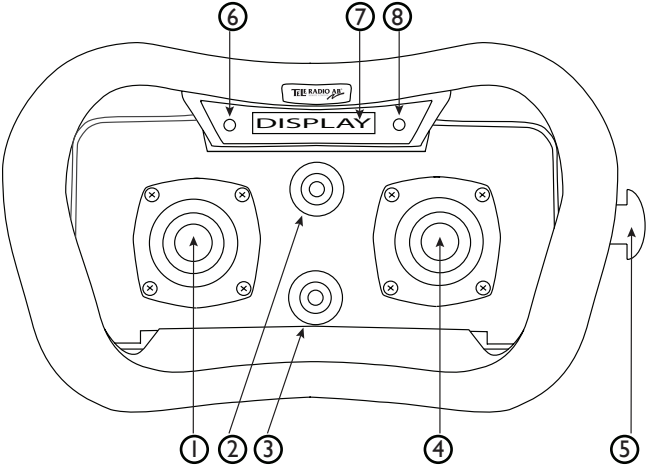


1. Left joystick
2. Front switch
3. Function switch
4. Right joystick
5. Stop button
6. Red/green LED 1
7. Display
8. Red/green LED 2

## LEFT SIDE

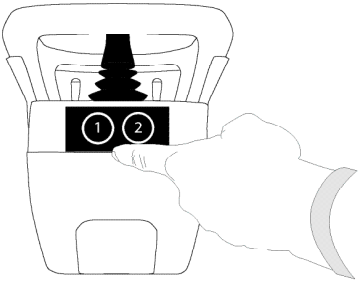


1. Side button 1
2. Side button 2 (safe button)

## RIGHT SIDE

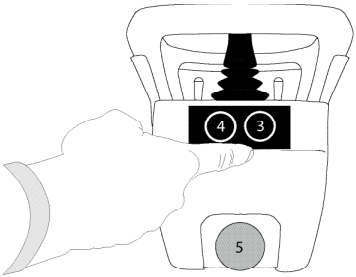


3. Side Button 3 (start button)
4. Side Button 4 (start + safe button)
5. STOP button

## START UP IN OPERATING MODE

1. Pull out the STOP button.

   *The green/red LEDs 1+2 light up: in green when the battery capacity is good, in red when the battery needs to be charged. See how to charge the battery in "Battery-how to charge".*
2. Select a receiver for the current session by using the left joystick.
3. Press the side buttons 3+4 until the buzzer sounds and LED 1+2 starts to flash.

## TURN OFF

1. Press the STOP button. The joystick is now turned off.

   **NOTE! All relays disconnect when the STOP button is pressed.**

## ENTER THE TRANSMITTER CONFIGURATION MENU

1. Pull out the STOP button.

   *The green/red LEDs 1+2 light up: in green when the battery capacity is good, in red when the battery needs to be charged. See how to charge the battery in "Battery-how to charge".*
2. Press button 3. Keep pressed.
3. Press the STOP button.
4. Release button 3.

   *The menu shows in the display. LED 1+2 starts to flash in green.*

## EXIT THE TRANSMITTER CONFIGURATION MENU

1. Press button 3. *The joystick transmitter turns itself off.*

# TRANSMITTER CONFIGURATION MENU MAP

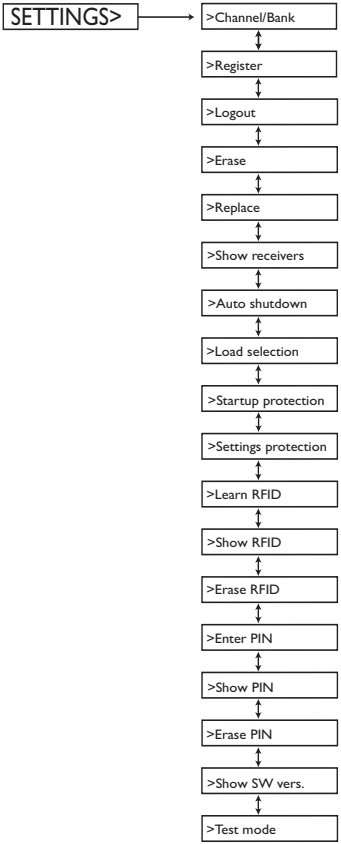

## NAVIGATE IN THE CONFIGURATION MENU

- TO MOVE UP AND DOWN: Move the left joystick up and down.
- TO SELECT: Press button 4.
- TO GO BACK: Move the left joystick to the left.
- TO EXIT: Press button 3 or pull out the STOP button. The transmitter will turn off.

## SWITCH FREQUENCY BANK

1. Pull out the STOP button. LEDs 1+2 light.
2. Press button 3. Keep pressed.
3. Press the STOP button.
4. Release button 3. *The configuration menu opens.*
5. Navigate to *"Channel/bank"* by scrolling down with the left joystick.
6. Select by pressing button 4.
7. Navigate to the bank that you want to switch to.
8. Select bank by pressing button 4.

*When you restart the transmitter, it will transmit on the channels included in the selected bank. The receiver will automatically detect and switch to the same frequency as the transmitter.*

## REGISTER THE JOYSTICK IN THE RECEIVER

You can register 1-15 TIGER transmitters in a TIGER receiver. Each transmitter has a unique ID code.

1. Pull out the STOP button. LEDs 1+2 light.
2. Press button 3. Keep pressed.
3. Press the STOP button.
4. Release button 3. *The configuration menu opens.*
5. Navigate to *"Register"*.
6. Select a slot for the transmitter to be stored in (slot 1-15).

7. Put the receiver in registering mode:

   a. Press the receiver Function button.

   b. Press the receiver Select button.

   c. All the receiver relay LEDs light red when the receiver is in registering mode.

   *Wait until the joystick display shows "Confirm on RX", which may take up to 15 seconds.*

8. Confirm by pressing the receiver Select button.

   *All receiver relay LEDs flash in red 3 times.*

9. The joystick turns itself off.

**IMPORTANT! For safety reasons, avoid registering transmitters in receivers where you don´t intend to use it.**

## ERASE THE TRANSMITTER FROM THE RECEIVER

**IMPORTANT! Do not perform the erase function during a running session.**

*NOTE ! The receiver must be powered during the erase function.*

1. Pull out the STOP button. LEDs 1+2 light.
2. Press button 3. Keep pressed.
3. Press the STOP button.
4. Release button 3. *The configuration menu opens.*
5. Navigate to "*Erase*".
6. Select the receiver that you want to erase.

   *The joystick display will show: "OK" when the receiver has been erased.*

   *The joystick transmitter turns itself off.*

# CHARGE THE BATTERY

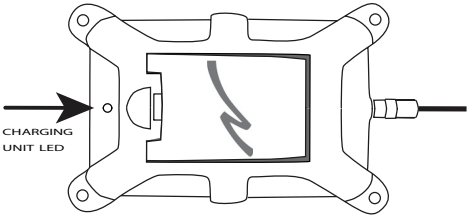


| | |
|---|---|
| BATTERY TYPE: | External and rechargeable |
| CHARGE: | In a charger unit. 5V DC ±10% (1A) |
| CHARGING TEMPERATURE: | 0°C to 45°C/ 32°F to 113° |
| OPERATING TIME: | Approx. 15 h. with continuous usage |
| | Approx. 27 h. when the display is off |
| SIZE: | 256 x 217 x 85 mm. |
| | 10 x 8.5 x 3.3 in. |

- Before using the joystick for the first time, make sure that the battery is fully charged.
- When it´s time to charge the battery, the transmitter LED 1+ 2 turn red and the buzzer beeps 3 times.
- When the battery is fully charged, the LED on the charger unit will go from red to green (approx. 4 h.).
- The battery can not be overcharged.
- The display monitors the battery status.

  *NOTE! The joystick must be on to check the battery status.*

# FCC AND IC INFORMATION

Caution: The user is cautioned that changes or modifications not expressly approved by the party responsible for compliance could void the user's authority to operate the equipment.

This device complies with Industry Canada licence-exempt RSS standard(s) and Part 15 of the FCC Rules. Operation is subject to the following two conditions: (1) this device may not cause harmful interference, and (2) this device must accept any interference received, including interference that may cause undesired operation.

Le présent appareil est conforme aux CNR d'Industrie Canada applicables aux appareils radio exempts de licence et la partie 15 des Règles FCC. L'exploitation est autorisée aux deux conditions suivantes :

(1) l'appareil ne doit pas produire de brouillage, et
(2) l'utilisateur de l'appareil doit accepter tout brouillage radioélectrique subi, même si le brouillage est susceptible d'en compromettre le fonctionnement.

This equipment complies with FCC radiation exposure limits set forth for an uncontrolled environment. End user must follow the specific operating instructions for satisfying RF exposure compliance. This transmitter must not be co-located or operating in conjunction with any other antenna or transmitter.

Cet appareil est conforme aux limites d'exposition au rayonnement RF stipulées par la FCC et l'IC pour une utilisation dans un environnement non contrôlé. L'utilisateur final doit suivre les instructions de fonctionnement spécifiques pour le respect d'exposition aux RF. Lesémetteurs ne doivent pas être placées près d'autres antennes ou émetteurs ou fonctionner avec ceux-ci.

The radio module in this product is labelled with its own FCC ID and IC number. The FCC ID and IC is not visible when the radio module is installed inside another device. Therefore, the outside of the device into which the module is installed must also display a label referring to the radio module. The final end device must be labelled in a visible area with the following:
"Contains FCC ID: ONFC1104A"
"Contains IC: 4807A-C1104A"
or
"Contains FCC ID: ONFC1104B"
"Contains IC: 4807A-C1104B"

# TRANSMITTER PRODUCT LABEL PLACEMENT

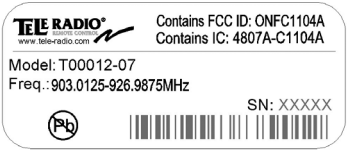


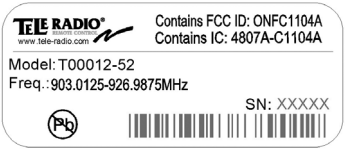


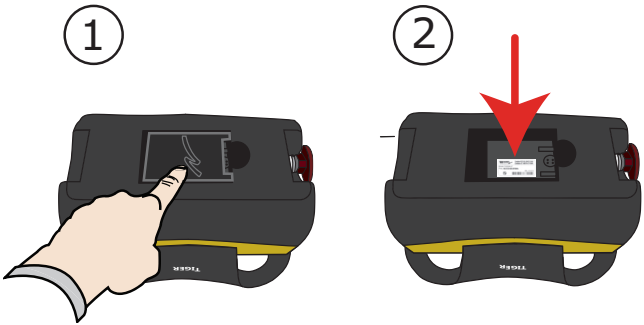


1. Remove the battery from the bottom of the joystick.
2. The product label with FCC/ IC information is placed under the battery.

# RECEIVER PRODUCT LABEL PLACEMENT

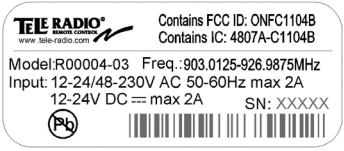


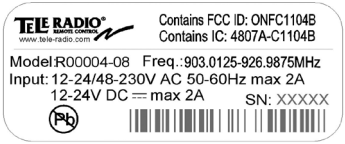


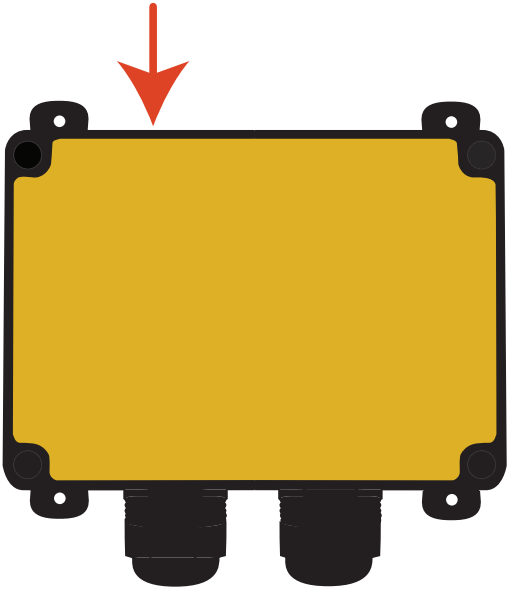

# FCC/ IC LABEL PLACEMENT ON TRANSMITTER

The FCC/ IC label is placed on the radio module. The radio module is mounted inside the transmitter.

L'étiquette FCC/IC est placée sur le module radio. Le module radio est monté à l'intérieur du récepteur.

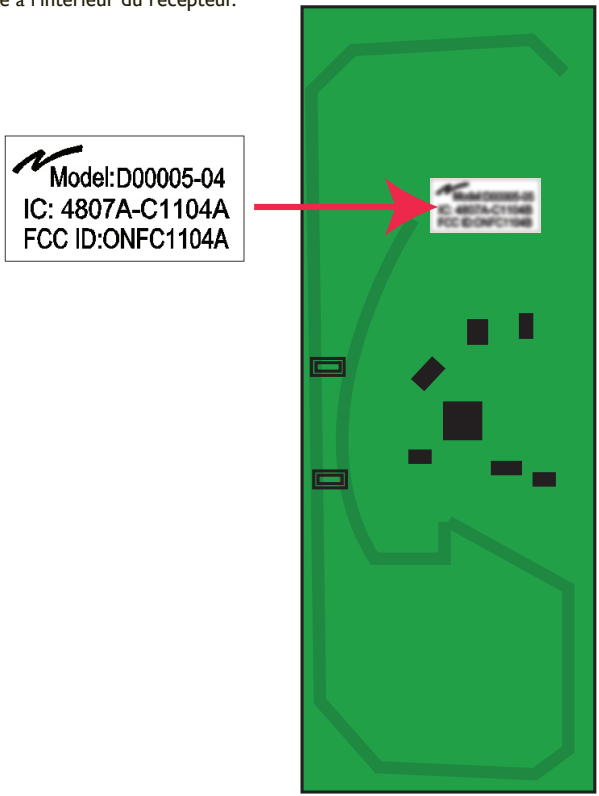

# FCC/ IC LABEL PLACEMENT ON RECEIVER

The FCC/ IC label is placed on the radio module. The radio module is mounted inside the receiver.

L'étiquette FCC/IC est placée sur le module radio. Le module radio est monté à l'intérieur de l'émetteur.

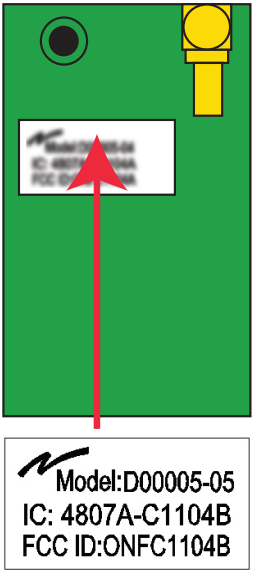

# THE RADIO MODULE

## FUNCTION

Each receiver and transmitter unit in the Tele Radio Tiger product range, contains a radio module that is specifically designed to match a Tele Radio Tiger unit in terms of physical dimensions, connection points, voltage levels, signal interface etc. To use the radio modules in non Tele Radio products is not permitted.

The radio modules are designed to interface directly to the main board of the receiver/transmitter unit. They are power supplied by the main board and the radio circuit operates strictly according to instructions from a microprocessor on the main board. The radio circuit configuration is stored in a flash memory on the radio module.

A receiver/transmitter unit with a defective/no radio module will give an error message immediately after power up, and it will not be possible to start a radio session.

## CROSS REFERENCE

Cross reference of radio modules and corresponding products:

<u>Tiger unit Radio module:</u>
T0012-* TR236
R0004-* TR254

INSTALLATION INSTRUCTIONS FOR TR236:
1. Make sure that the transmitter unit is turned off.
2. Open the T0012-* enclosure.
3. Connect the antenna cable from the main board to the 1x15 pole pin connector on TR236.
4. Assemble TR236 in the bottom part of the enclosure. Assemble TR236 so that the pin connector faces outwards.

INSTALLATION INSTRUCTIONS FOR TR254:
1. Make sure that the unit is turned off.
2. Open the R0004-* enclosure.
3. Connect the 2x12 pole socket connector of TR254 directly to the main board of R0004-*.

**TELE RADIO AB**
Sweden, Main office
Tel. +46 (0)31-746 54 60
e-mail:info@tele-radio.com

www.tele-radio.com

**TELE RADIO SVERIGE**
Sweden
Tel. +46 (0)31-724 98 00
e-mail:sverige@tele-radio.com

**TELE RADIO GmbH**
Germany
Tel. +49 (0)94 51-944 8 550
e-mail:deutschland@tele-radio.com

**TELE RADIO ASIA**
China
Tel. +86-(0)592-3111 168
e-mail:china@tele-radio.com

**TELE RADIO TURKEY**
Turkey
Tel. +90 216 574 22 94
e-mail:turkiye@tele-radio.com

**TELE RADIO LTD**
England
Tel. +44 (0) 1625 509125
e-mail:england@tele-radio.com

**TELE RADIO LLC**
North America & Latin America
Tel. +1 (305) 459-0763
e-mail:america@tele-radio.com

**TELE RADIO BV**
Benelux
Tel. +31-(0)70-419 41 20
e-mail:benelux@tele-radio.com

**TELE RADIO AS**
Norway
Tel. +47-6933 4900
e-mail:norge@tele-radio.com