singing machine®

creating Joy through music™

SML712BK/SML712W

INSTRUCTION MANUAL/ MANUAL DE INSTRUCCIONES/
MODE D'EMPLOI

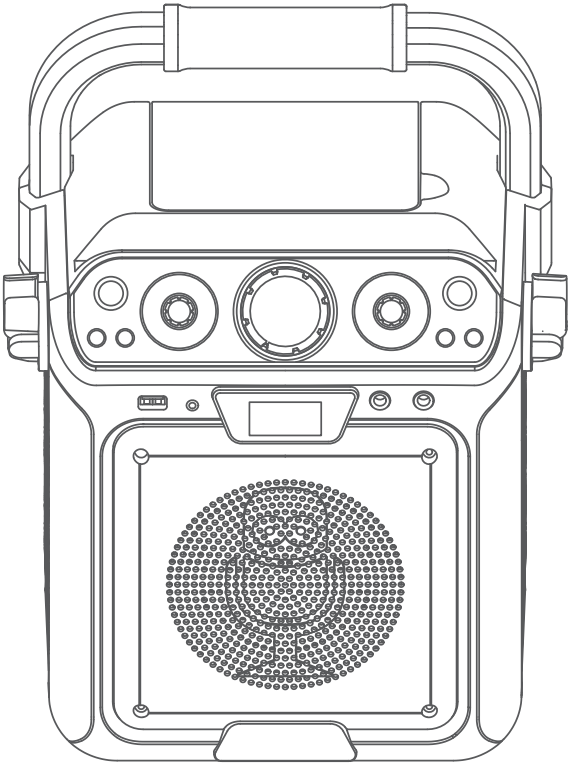

www.singingmachine.com

The Singing Machine® is a registered trademark of The Singing Machine Co., Inc.
The Singing Machine® es marca registrada de The Singing Machine Co., Inc.
Singing Machine® est une marque déposée par The Singing Machine Co., Inc.

Warnings

CAUTION

RISK OF ELECTRIC SHOCK
DO NOT OPEN

CAUTION: TO REDUCE THE RISK OF ELECTRIC SHOCK, DO NOT REMOVE COVER (OR BACK). NO USER-SERVICEABLE PARTS INSIDE. REFER SERVICING TO QUALIFIED SERVICE PERSONNEL.

DANGEROUS VOLTAGE: The lightning flash with arrowhead symbol within an equilateral triangle is intended to alert the user to the presence of uninsulated dangerous voltage within the product's enclosure that may be of sufficient magnitude to constitute a risk of electric shock to persons.

ATTENTION: The exclamation point within an equilateral triangle is intended to alert the user to the presence of important operating and maintenance (servicing) instructions in the literature accompanying this product.

DRIPPING WARNING: This product shall not be exposed to dripping or splashing, and no objects filled with liquids, such as vases, shall be placed on the product.

VENTILATION WARNING: The normal ventilation of the product shall not be impeded for intended use.

THIS PRODUCT COMPLIES WITH DHHS RULES 21 CFR CHAPTER 1, SUBCHAPTER J APPLICABLE AT DATE OF MANUFACTURED.

Warnings:

- This CD player employs a laser light beam. Only a qualified service person should remove the cover or attempt to service this device, due to possible eye injury.
- The use of controls, adjustments, or procedures other than those specified herein might result in hazardous radiation exposure.
- The apparatus shall be used in an open area.

CAUTION!
Invisible laser radiation when open and interlocks defeated. Avoid exposure to beam.

WARNING: TO PREVENT FIRE OR SHOCK HAZARD, DO NOT EXPOSE THIS UNIT TO RAIN OR MOISTURE.

CAUTION: TO PREVENT ELECTRIC SHOCK, MATCH WIDE BLADE OF PLUG TO WIDE SLOT AND FULLY INSERT.

FCC WARNING: This equipment may generate or use radio frequency energy. Changes or modifications to this equipment may cause harmful interference unless the modifications are expressly approved in the instruction manual. The user could lose the authority to operate this equipment if an unauthorized change or modification is made.

This device complies with part 15 of the FCC Rules. Operation is subject to the following two conditions: (1) This device may not cause harmful interference, and (2) this device must accept any interference received, including interference that may cause undesired operation.

NOTE: This equipment has been tested and found to comply with the limits for a Class B digital device, pursuant to part 15 of the FCC Rules. These limits are designed to provide reasonable protection against harmful interference in a residential installation. This equipment generates, uses and can radiate radio frequency energy and, if not installed and used in accordance with the instructions, may cause harmful interference to radio communications. However, there is no guarantee that interference will not occur in a particular installation. If this equipment does cause harmful interference to radio or television reception, which can be determined by turning the equipment off and on, the user is encouraged to try to correct the interference by one or more of the following measures:

- Reorient or relocate the receiving antenna.
- Increase the separation between the equipment and receiver.
- Connect the equipment into an outlet on a circuit different from that to which the receiver is connected.
- Consult the dealer or an experienced radio/TV technician for help.
- The rating information is located at the bottom of the unit.

INDUSTRY CANADA NOTICE:
This device contains licence-exempt transmitter(s)/receiver(s) that comply with Innovation, Science and Economic Development Canada's licence-exempt RSS(s). Operation is subject to the following two conditions:

(1) This device may not cause interference.
(2) This device must accept any interference, including interference that may cause undesired operation of the device.

CAN ICES-3(B)/NMB-3(B)

Important Safety Information

1. Read these Instructions.
2. Keep these Instructions.
3. Heed all Warnings.
4. Follow all Instructions.
5. Do not use this apparatus near water.
6. Clean only with a dry cloth.
7. Do not block any of the ventilation openings. Install in accordance with the Manufacturer's instructions.
8. Do not install near any heat sources such as radiators, heat registers, stoves, or other apparatus (including amplifiers) that produce heat.
9. Do not defeat the safety purpose of the polarized or grounding-type plug. A polarized plug has two blades with one wider than the other. A grounding type plug has two blades and a third grounding prong. The wide blade or the third prong are provided for your safety. When the provided plug does not fit into your outlet, consult an electrician for replacement of the obsolete outlet.
10. Protect the power cord from being walked on or pinched particularly at plugs, convenience receptacles, and the point where they exit from the apparatus.
11. Only use attachments/accessories specified by the manufacturer.
12. Use only with a cart, stand, tripod, bracket, or table specified by the manufacturer, or sold with the apparatus. When a cart is used, use caution when moving the cart/apparatus combination to avoid injury from tip-over.

PORTABLE CART WARNING
(symbol provided by RETAC)

13. Unplug this apparatus during lightning storms or when unused for long periods of time.
14. Refer all servicing to qualified service personnel. Servicing is required when the apparatus has been damaged in any way, such as power-supply cord or plug is damaged, liquid has been spilled or objects have fallen into the apparatus, the apparatus has been exposed to rain or moisture, does not operate normally, or has been dropped.
15. WARNING: To reduce the risk of fire or electric shock, do not expose this apparatus to rain or moisture. Do not place objects filled with water, such as a vase, on the apparatus.
16. The AC mains plug is used as the power disconnect device and it should remain readily accessible and operable during intended use. In order to completely disconnect the apparatus from power, the mains plug should be completely removed from the AC outlet socket.
17. CAUTION: To reduce the risk of fire or explosion, do not expose batteries to excessive heat such as sunshine, fire or other heat sources.

Included

What's in the box.

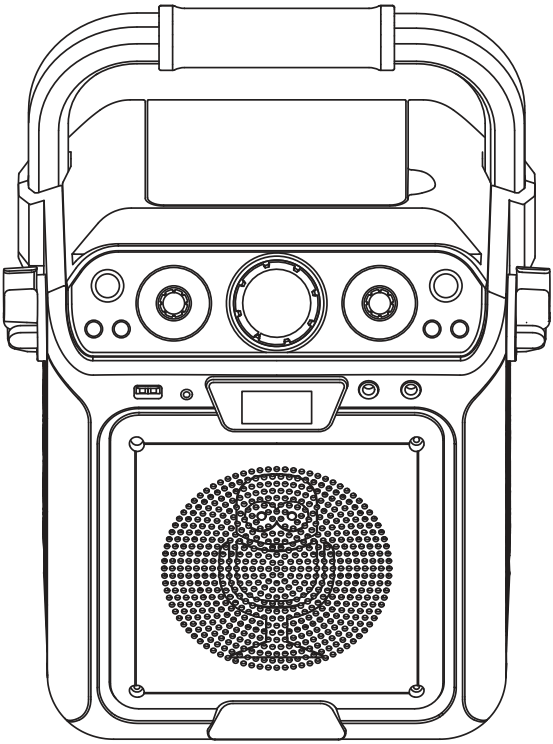

Main Unit

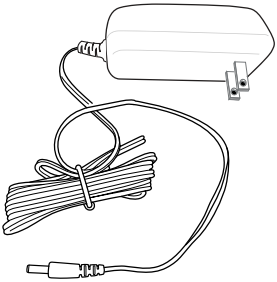

AC Adapter

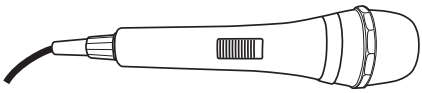

Wired Microphone

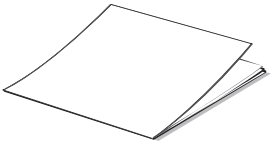

Manual

Audio/Video Cables

Location of Controls (Top/Front)

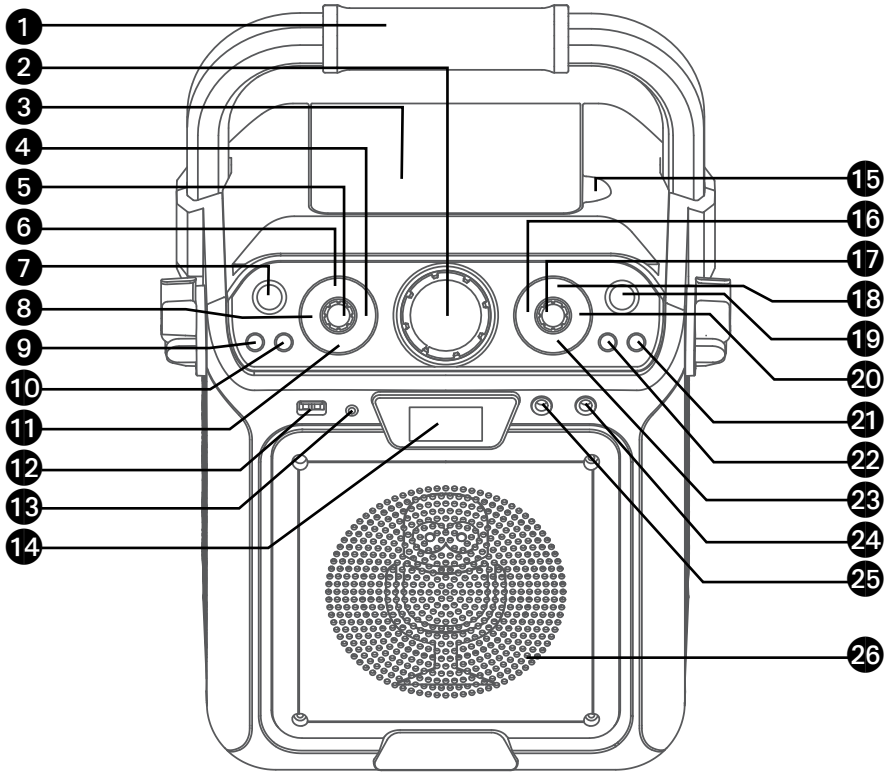

1. Handle
2. MASTER VOLUME Control
3. CD Compartment
4. Button
5. VOICE EFFECT Control
6. Button
7. ON/OFF Button
8. Button
9. FUNCTION Button
10. PAIR Button
11. Build-in loop Songs Button
12. USB Jack
13. LINE IN Jack
14. Display
15. Open/Close Tab
16. Skip ❮ Button
17. MIC VOLUME Control
18. Repeat/Program Button
19. RECORD Button
20. Skip ❯ Button
21. LIGHTS Button
22. STOP Button
23. ENTER/Play/Pause Button
24. MIC 2 Jack
25. MIC 1 Jack
26. Speaker

Location of Controls (Rear)

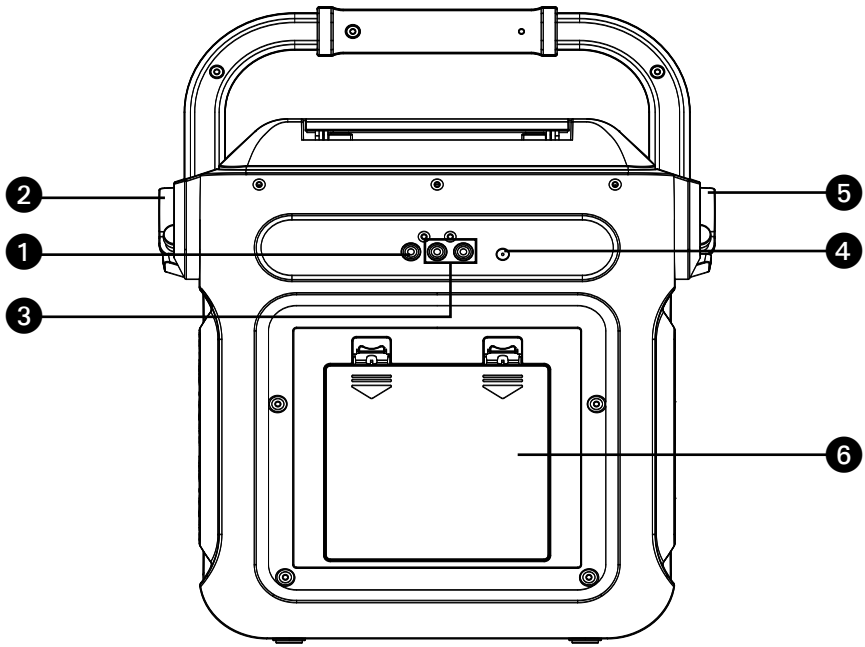

1. Video Out Jack
2. Mic Holder (side of unit)
3. Right/Left Audio Out Jacks
4. DC In Jack
5. Mic Holder (side of unit)
6. Battery Compartment

Location of Controls (Display)

1. CDG Indicator
2. Display
3. Repeat Indicator
4. PLAY/PAUSE Indicator
5. Program Indicator

Connection

Connecting the Microphone(s)

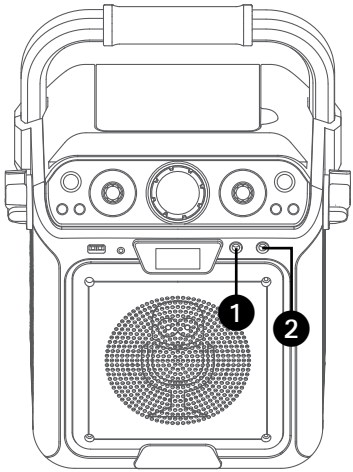

Microphones:
Connect a microphone into MIC jack 1 ❶ as well as MIC jack 2 ❷ (when desired).

Note: Do not drop or tap the Mic as damage to the Mic or speakers may occur. Do not twirl the microphone by cord as it will cause damage to the encased wiring.

Connecting the Unit to a TV

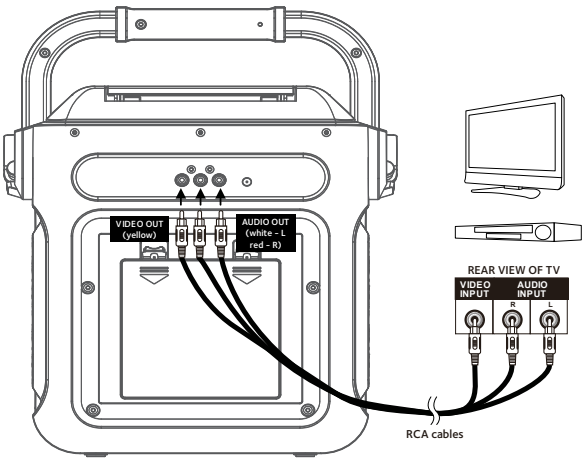

To output the video, lyrics and audio to your TV, perform the following steps:

1 Connect the RCA video cable (Yellow) to the VIDEO OUT jack and the audio cables (White and Red) to the AUDIO OUT jacks located on the back of the Singing Machine.

2 Connect the opposite end of the RCA video cable (Yellow) to the VIDEO IN jack and the audio cables (White and Red) to the AUDIO IN on your TV.

Notes:
- This unit can be used with or without a TV, but it is highly recommended to use a TV in order to utilize all the features.
- Also refer to the TV's User Guide.
- To see the lyrics on the screen, you must use a CD+G disc or MP3+G files.

Connection

Connecting to AC Power

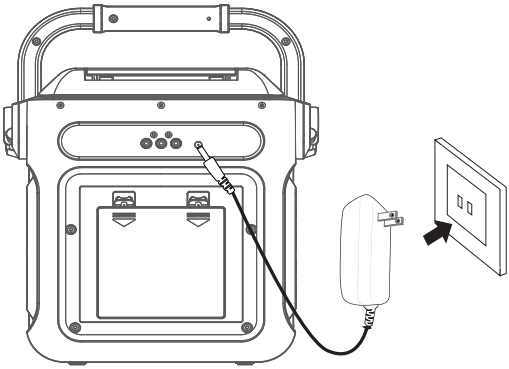

Insert the AC power cord into a conveniently located AC outlet having 120V AC, 60Hz.

Note:
Make all connections before connecting to AC power.

Inserting Batteries

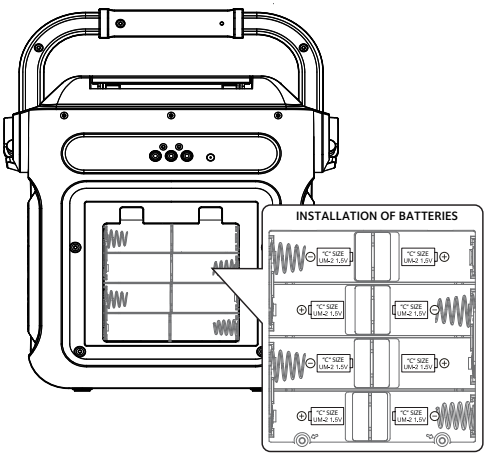

1 Slide the battery door in the direction the arrows to reveal the battery compartment. Insert eight (8) "C" size alkaline batteries (not included) as indicated on the diagram.

2 Replace cover tightly before operating.

Battery Precautions

The precautions below should be followed when using batteries in this device:

1. Use only the size and type of batteries specified.
2. Be sure to follow the correct polarity when installing the batteries as indicated in the battery compartment. Reversed batteries may cause damage to the device.
3. Do not mix different types of batteries together (e.g. Alkaline and Carbon Zinc) or old batteries with fresh ones.
4. If the device is not to be used for a long period of time, remove the batteries to prevent damage or injury from possible battery leakage.
5. Do not try to recharge batteries not intended to be recharged, they can overheat and rupture. (Follow battery manufacturer's directions.)
6. Rechargeable batteries are to be removed from the product before being charged.
7. Rechargeable batteries are only to be charged under adult supervision.
8. Exhausted batteries are to be removed from the product.
9. Batteries shall not be exposed to excessive heat such as sunshine, fire or the like.

Operation

Connecting to Line In Jack

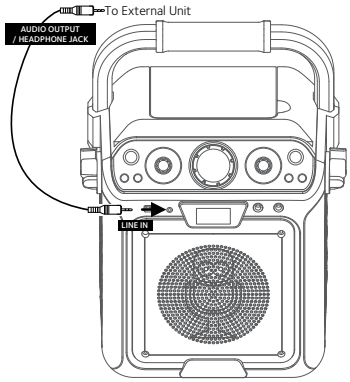

Connect an external device by using an appropriate cable (3.5mm audio cable not included) as shown.

Note:
See page E20 to select and use the Line In function.

Disco Lights

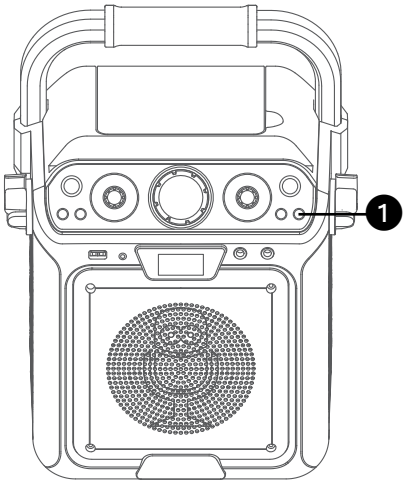

When the unit is turned on, the Light mode 1 is automatically activated. The lights will light up and will synchronize with sound when you speak or sing into the microphone.

Press the **LIGHTS** button for Light mode 2 which will display the light show but will not respond to the microphone.

Press the **LIGHTS** button once again to turn off the Lights.

Operation

Playing a CD

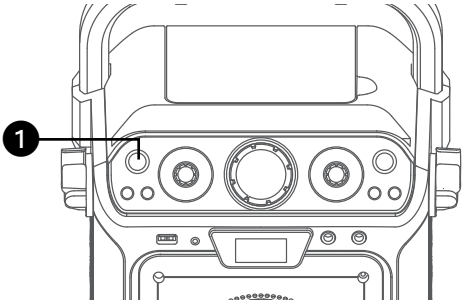

1 Connect the unit as described previously; it should be connected to a TV. Press the **ON/OFF** button to turn the unit on.

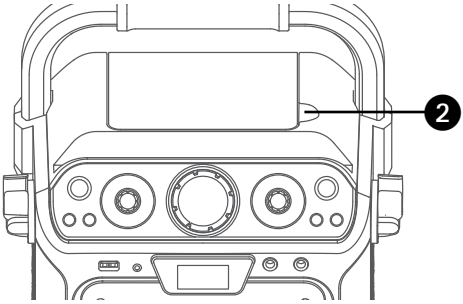

2 Lift open the CD door and insert a CD (with standard or MP3+G files) or a CD+G by gently pressing it on the center spindle. Then close the CD door.

Notes:

- **What is a CD+G?**
  A CD+G (CD+Graphics) is the standard format for most karaoke discs that will display the words on the screen.
- **What is an MP3+G?**
  MP3+G is the newest format for karaoke music utilizing the MP3's small file size. It will display the words on the screen. See page 20 to order and download MP3+G files.

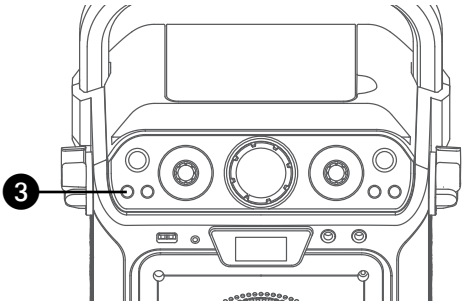

3 Repeatedly press the **FUNCTION** button to select the CDG/CD mode; "---" will blink when searching the disc and then the total number of tracks will appear.

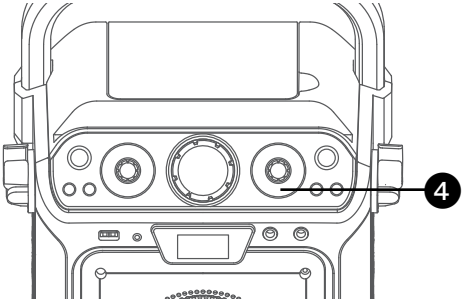

4 Press the **ENTER/▶II** button to start playback; if listening to a CD+G file, the image and lyrics will appear on the TV screen (if connected) and the indicator of PLAY/PAUSE and CDG will light.

Operation

Playing a CD (Continued)

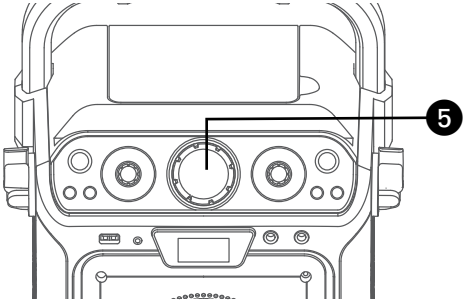

5 Adjust the volume to a comfortable level using the **MASTER VOLUME** control.

Notes:

- Never place anything other than a CD in the compartment, as foreign objects can damage the unit.
- If no disc is inserted, “no” will appear on the display.
- If connected to a TV or other audio source, adjust the volume of the TV using its own volume control.

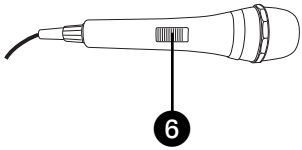

6 Connect microphone(s) and slide the **ON/OFF** switch on the microphone to the ON position.

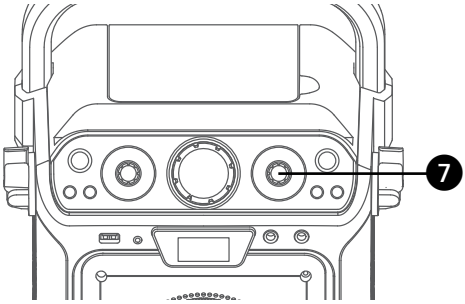

7 Adjust the **MIC VOLUME** control as desired. Increasing this control will increase the volume of both microphones.

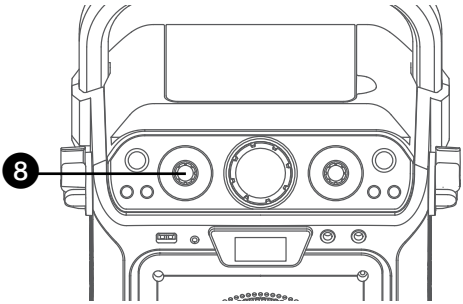

8 **SING-ALONG WITH BUILT-IN VOICE CHANGERS**

There are 6 built-in voice changers in this unit. Adjust the **VOICE EFFECT** control the voice will change when the singer starts to sing through the microphone.

EF0 - NONE,
EF1 - ECHO,
EF2 - FEMALE,
EF3 - MALE,
EF4 - CHIPMUNK,
EF5 - ROBOT, or
EF6 - RADIO.

Operation

Playing a CD (Continued)

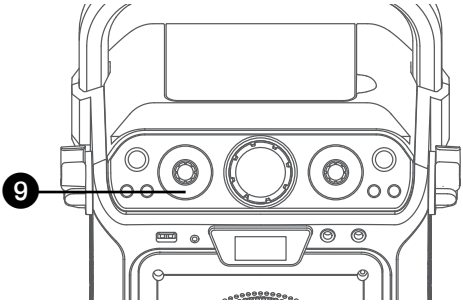

9 **SING-ALONG WITH BUILT-IN LOOP SONGS**
There are 3 built-in loop songs. Repeatly press **SONGS** buttons to play the 3 different songs. The loop song will stop when pressing fourth time.

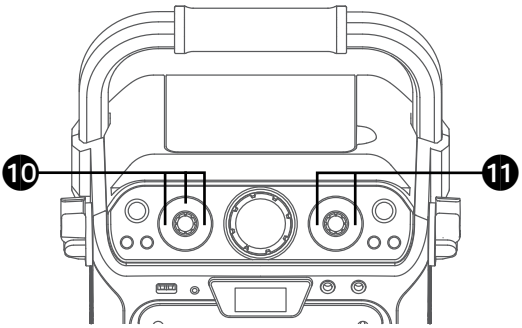

10 **PLAYING BUILT-IN EFFECTS**
Press , or button to play three different built-in sound effects.

11 **SKIP:** Advance or go back one track by pressing the **Skip** 〈 and **Skip** 〉 button.

12 **REPEAT:** During playback, press the **PROG /REPEAT** button once to repeatedly play the selected song; the Repeat indicator will blink. Press the **PROG / REPEAT** button a second time to repeatedly play the whole CD; the Repeat indicator will light solid. Press it again to cancel Repeat function, the Repeat indicator turns off.

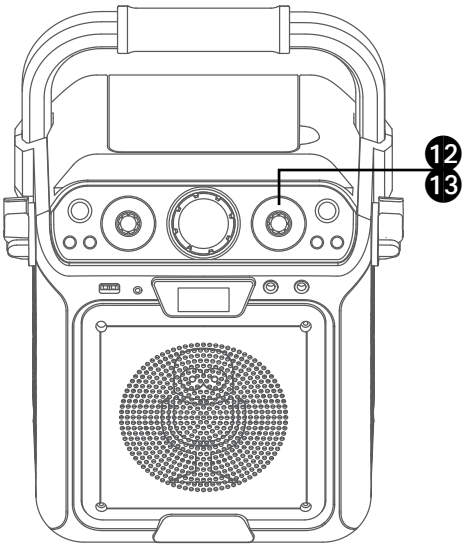

13 **PROGRAM:** You can program up to 20 tracks on any disc for playback in any desired order. While in the Stop mode, press the **PROG /REPEAT** button; the Repeat/Program indicator will blink and "01" will appear on the display indicating the first program is ready to program.

Operation

Playing a CD (Continued)

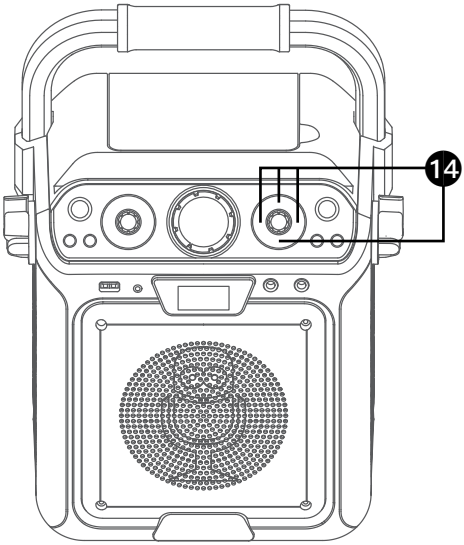

14 **PROGRAM:** Select the first track using the **SKIP** ❮ and **SKIP** ❯ buttons. Press the **PROG / REPEAT** button again to confirm the entry. Repeat to set up to 20 tracks into memory. When done, press the **ENTER/**▶II button to start playback.

Program Notes:

- Press the **STOP** button TWICE to stop and clear the program.
- If more than 20 tracks are attempted to be programmed, "FUL" will appear in the display.

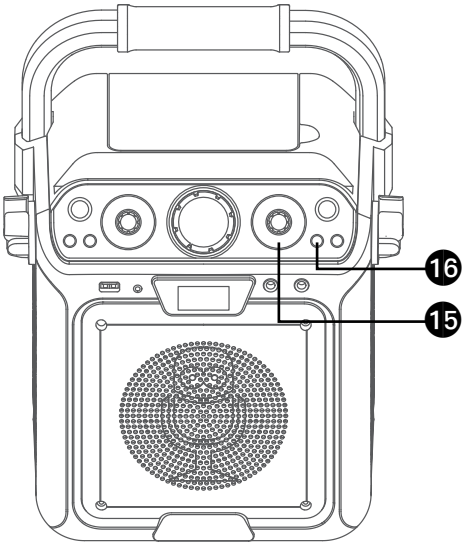

15 **PAUSE:** During playback, if you wish to pause the disc momentarily, press the **ENTER/** ▶II button; the PLAY/PAUSE indicator will blink. Press again to resume normal playback.

16 Press the **STOP** button to stop playback.

Operation

Playing a CD (Continued)

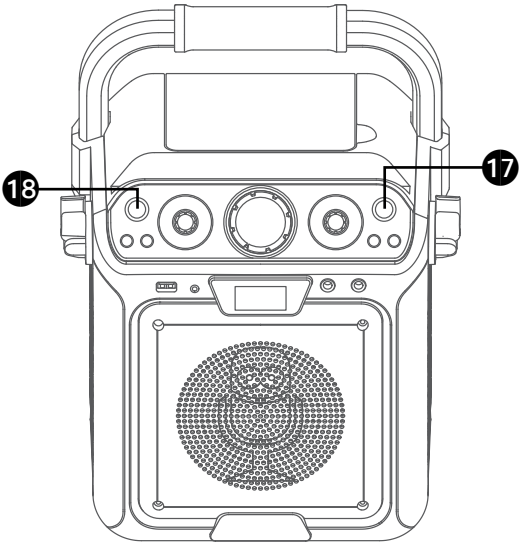

17 **RECORD YOUR VOCAL PERFORMANCE:**
To record your singing as well as the music, press the **REC** button. Recording will begin and the light around the **REC** button will light solid.
When done recording, press the **REC** button again; the light around the REC button will turn off.

Notes:

- The recorded audio file will record onto the USB drive.
- See section "Playing Songs from the USB" to play back your recorded files.

18 Press the **ON/OFF** button to turn the unit off.

Operation

Playing Songs from the USB

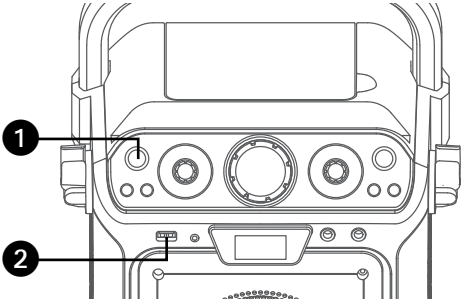

1 Connect the unit as described previously; it should be connected to a TV. Press the **ON/OFF** button to turn the unit on.

2 Insert a USB flash drive into the USB slot on the unit so it faces upward.

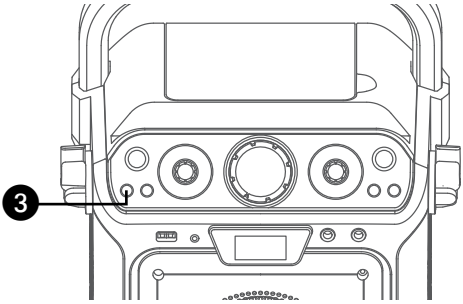

3 Repeatedly press the **FUNCTION** button to select the USB mode; "USb" will appear when searching the drive and then the total number of files will appear.

Note: It is highly recommended to have it connected to a TV for USB playback.

4 Press the **ENTER/▶II** button to start playback; if listening to an MP3+G file, the image and lyrics will appear on the TV screen (if connected).

Notes:

- If connected to a TV you will see the selected song and folders on the TV screen. You can navigate them using the **SKIP** 〈 and **SKIP** 〉 buttons.
- If you recorded any audio files you can also select them using the **SKIP** 〈 and **SKIP** 〉 buttons to select the REC folder on the TV screen.

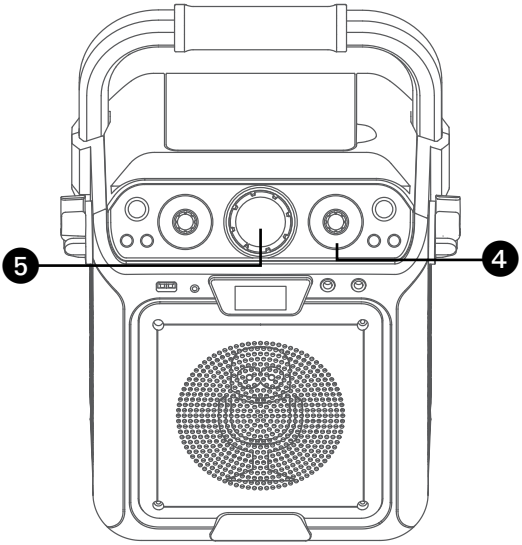

5 Adjust the volume to a comfortable level using the **MASTER VOLUME** control.

Note: If connected to a TV or other audio source, adjust the volume of the TV using its own volume control.

Operation

Playing Songs from the USB (Continued)

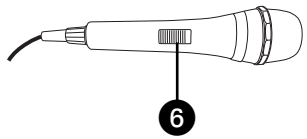

6 Connect microphone(s) and slide the **ON/OFF** switch on the microphone to the ON position.

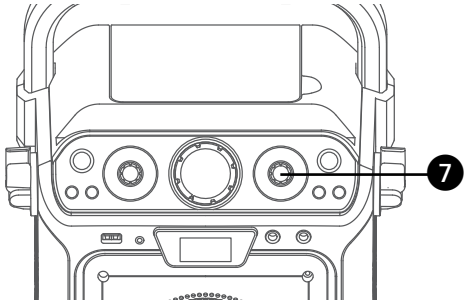

7 Adjust the **MIC VOLUME** control as desired. Increasing this control will increase the volume of both microphones.

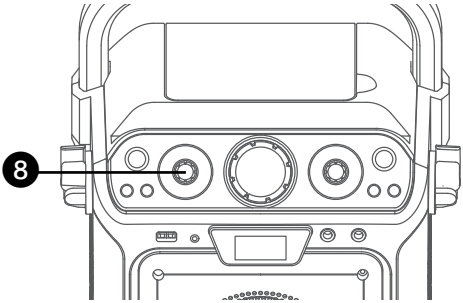

8 **SING-ALONG WITH BUILT-IN VOICE CHANGERS**

There are 6 built-in voice changers in this unit. Adjust the **VOICE EFFECT** control the voice will change when the singer starts to sing through the microphone.

EF0 - NONE,
EF1 - ECHO,
EF2 - FEMALE,
EF3 - MALE,
EF4 - CHIPMUNK,
EF5 - ROBOT, or
EF6 - RADIO.

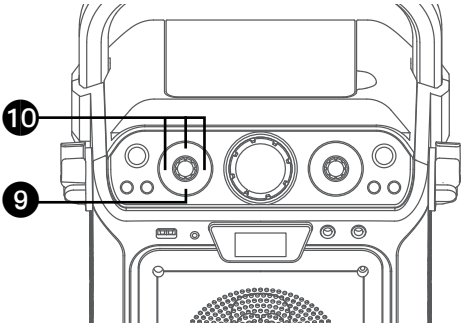

9 **SING-ALONG WITH BUILT-IN LOOP SONGS**

There are 3 built-in loop songs. Repeatly press **SONGS** buttons to play the 3 different songs. The loop song will stop when pressing fourth time.

10 **PLAYING BUILT-IN EFFECTS**

Press , or button to play three different built-in sound effects.

Operation

Playing Songs from the USB (Continued)

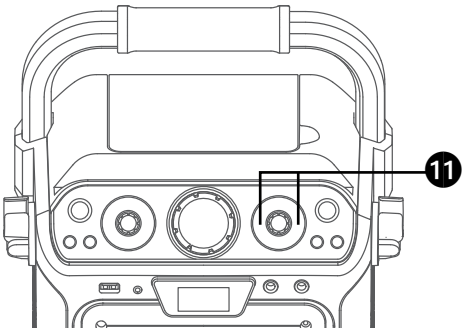

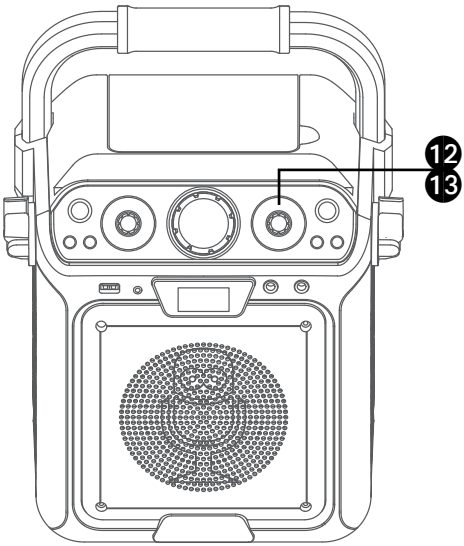

11 **SKIP:** Advance or go back one track by pressing the **SKIP** 〈 and **SKIP** 〉 buttons.

12 **REPEAT:** During playback, press the **PROG /REPEAT** button once to repeatedly play the selected song; the Repeat/Program indicator will blink rapidly. Press the **PROG /REPEAT** button a second time to repeatedly play the selected folder; the Repeat indicator will blink slowly. Press a third time to repeatedly play the USB; the Repeat/Program indicator will light solid. Press it again to cancel Repeat function; the indicator will turn off.

13 **PROGRAM:** You can program up to 20 tracks for playback in any desired order. While in the Stop mode, press the **PROG /REPEAT** button; the Program indicator will blink and "01" will appear on the display indicating the first program is ready to program. Select the first track using the **SKIP** 〈 and **SKIP** 〉 buttons. Press the **PROG / REPEAT** button again to confirm the entry. Repeat to set up to 20 tracks into memory. When done, press the **ENTER/**▶II button to start playback.

Notes:

- Press the **STOP** button TWICE to stop and clear the program.
- If more than 20 tracks are attempted to be programmed, "FUL" will appear in the display.

Operation

Playing Songs from the USB (Continued)

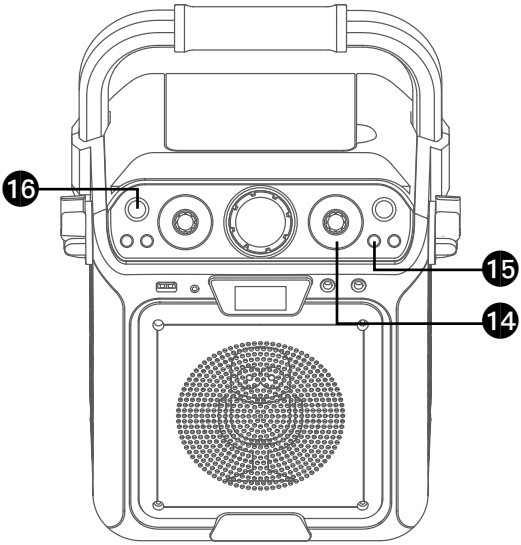

14 **PAUSE:** During playback, if you wish to pause the music momentarily, press the **ENTER/ ▶II** button; the Play/Pause indicator will blink. Press again to resume normal playback.

15 Press the **STOP** button to stop playback.

16 Press the **ON/OFF** button to turn the unit off.

Operation

Using a Bluetooth Device

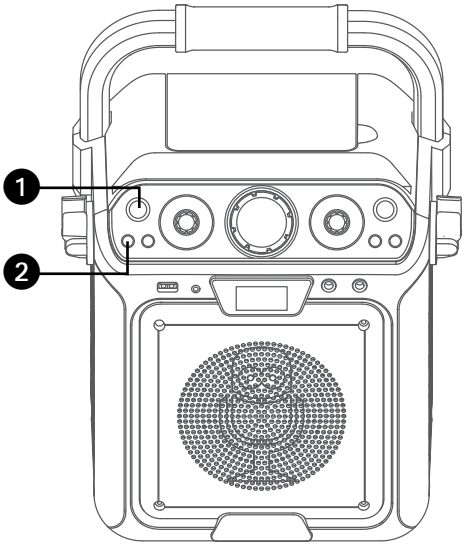

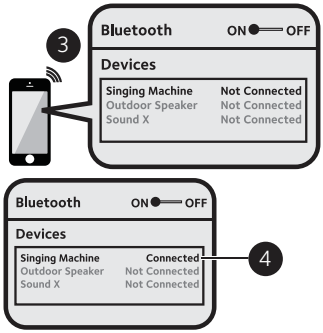

1 Connect the unit as described previously. Press the **ON/OFF** button to turn the unit on.

2 Repeatedly press the **FUNCTION** button to select the Bluetooth; "bt" will appear in the display. The unit automatically searches for and pairs a previously paired Bluetooth device (if previously paired). If no previously paired devices are present, connect as shown in the next step.

Note: You can also press the **PAIR** button to disconnect any paired devices in order to pair another device.

3 Turn on your device's Bluetooth option in settings to search for a discoverable device with a Bluetooth signal. Select "**Singing Machine**" from the device results on the Bluetooth menu.

Note: Also refer to the user manual of your Bluetooth device for detailed instructions.

4 The Bluetooth indicator will light solid and a chime will sound.

Notes:

- If your Bluetooth prompts you for a passcode during the pairing process, please enter "0000" to connect.
- On some Bluetooth devices, once pairing is complete, select your Bluetooth device as "Use as Audio Device" or similar.
- If connection is lost after successful pairing, check to make sure the distance between speaker and Bluetooth-enabled device does not exceed 30 feet/10 meters.

Operation

Using a Bluetooth Device (Continued)

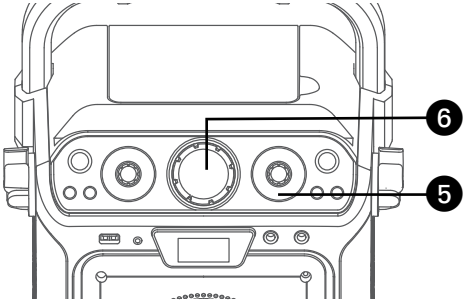

5 Start playback of your bluetooth device. Press the **ENTER/▶II** button during playback to pause the song.

6 Adjust the volume to a comfortable level using the **MASTER VOLUME** control on this unit as well as the volume on your Bluetooth device.

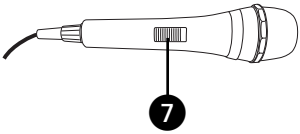

7 Connect microphone(s) and slide the **ON/OFF** switch on the microphone to the ON position.

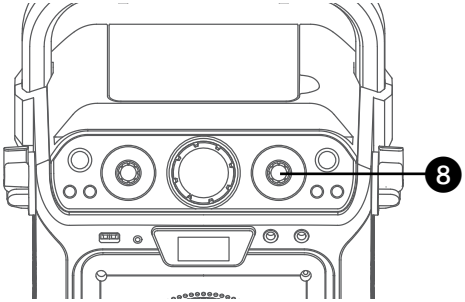

8 Adjust the **MIC VOLUME** control as desired. Increasing this control will increase the volume of both microphones.

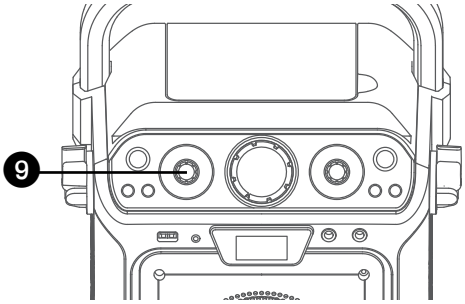

9 **SING-ALONG WITH BUILT-IN VOICE CHANGERS**

There are 6 built-in voice changers in this unit. Adjust the **VOICE EFFECT** control the voice will change when the singer starts to sing through the microphone.

EF0 - NONE,
EF1 - ECHO,
EF2 - FEMALE,
EF3 - MALE,
EF4 - CHIPMUNK,
EF5 - ROBOT, or
EF6 - RADIO.

Operation

Using a Bluetooth Device (Continued)

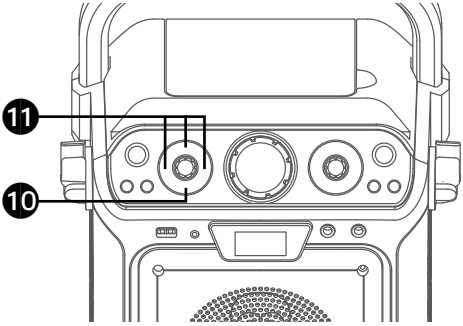

10 SING-ALONG WITH BUILT-IN LOOP SONGS

There are 3 built-in loop songs. Repeatly press **SONGS** buttons to play the 3 different songs. The loop song will stop when pressing fourth time.

11 PLAYING BUILT-IN EFFECTS

Press , or button to play three different built-in sound effects.

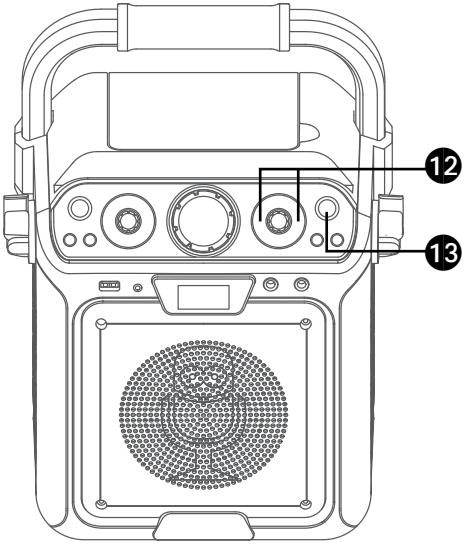

12

SKIP: Advance or go back one track by pressing the **SKIP** 〈 and **SKIP** 〉 buttons.

13 RECORD YOUR VOCAL PERFORMANCE:

To record your singing as well as the music, press the **REC** button. Recording will begin and the light around the **REC** button will light solid.

When done recording, press the RECORD button again; the light around the **REC** button will turn off.

Notes:

- The recorded audio file will record onto the USB drive.
- See section "Playing Songs from the USB" to play back your recorded files.

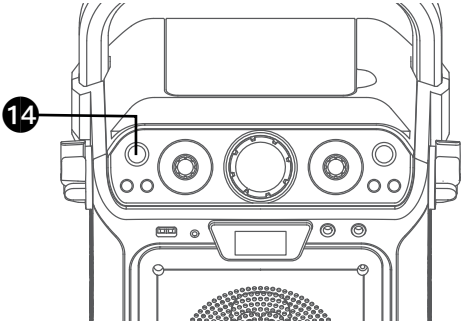

14

Press the **ON/OFF** button to turn the unit off.

Operation

Using the LINE IN Jack

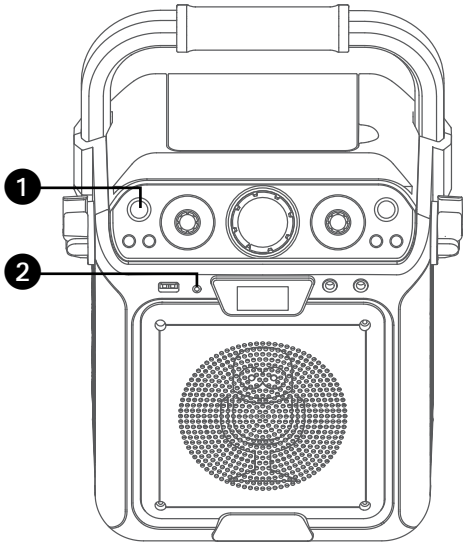

1 Connect the unit as described previously. Press the **ON/OFF** button to turn the unit on.

2 Connect the external unit to the LINE IN Jack on the front of this unit. Connecting an external unit will allow the audio to be played through your Singing Machine.

Notes:

- It is highly recommended to set the volume on the auxiliary unit to 1/3 or lower to avoid distortion.
- Skipping files/tracks is not possible in this unit when using an external device.

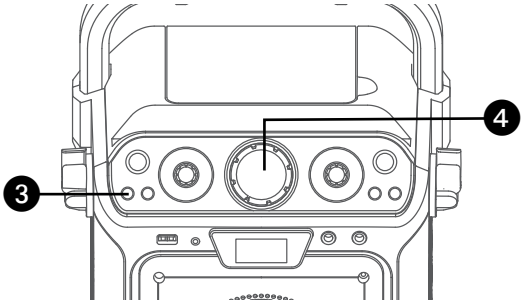

3 Repeatedly press the **FUNCTION** button to select the LINE IN mode; “AU” will appear in the display.

4 Adjust the volume using the **MASTER VOLUME** control on this unit or your external device’s volume control.

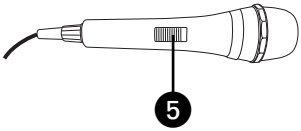

5 Connect microphone(s) and slide the **ON/OFF** switch on the microphone to the ON position.

Operation

Using the LINE IN Jack (Continued)

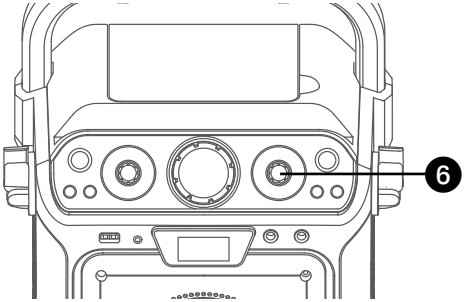

6

Adjust the **MIC VOLUME** control as desired. Increasing this control will increase the volume of both microphones.

7

SING-ALONG WITH BUILT-IN VOICE CHANGERS

There are 6 built-in voice changers in this unit. Adjust the **VOICE EFFECT** control the voice will change when the singer starts to sing through the microphone.

EF0 - NONE,
EF1 - ECHO,
EF2 - FEMALE,
EF3 - MALE,
EF4 - CHIPMUNK,
EF5 - ROBOT, or
EF6 - RADIO.

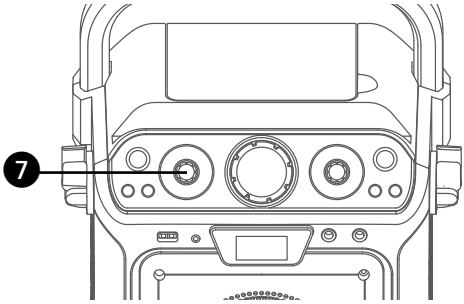

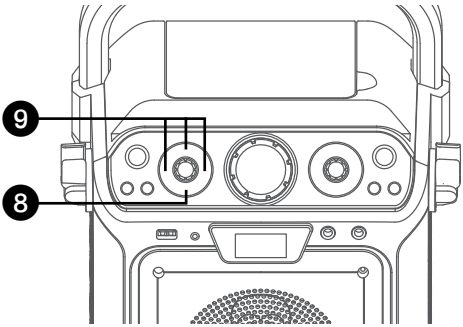

8

SING-ALONG WITH BUILT-IN LOOP SONGS

There are 3 built-in loop songs. Repeatly press **SONGS** buttons to play the 3 different songs. The loop song will stop when pressing fourth time.

9

PLAYING BUILT-IN EFFECTS

Press , or button to play three different built-in sound effects.

Operation

Using the LINE IN Jack (Continued)

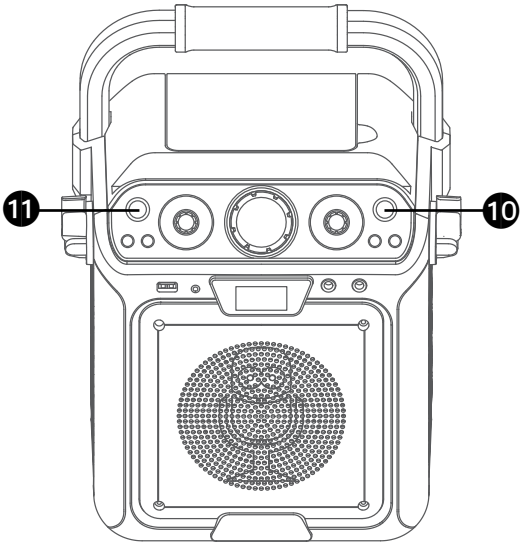

10 **RECORD YOUR VOCAL PERFORMANCE:**

To record your singing as well as the music, press the **REC** button. Recording will begin and the light around the **REC** button will light solid.

When done recording, press the **REC** button again; the light around the REC button will turn off.

Notes:

- The recorded audio file will record onto the USB drive.
- See section "Playing Songs from the USB" to play back your recorded files.

11 Press the **ON/OFF** button to turn the unit off.

Operation

Where to Download MP3+G Files

Helpful Hints:

The .mp3 and .cdg files are delivered for download in a single, compressed MP3+G.zip file. The MP3+G file cannot be played as a .zip file on a USB flash drive. To play karaoke songs using a USB flash drive, the MP3+G .zip file must be unzipped as follows:

- Connect a USB flash drive to your computer.
- Download the MP3+G file from your Digital Locker and save the .zip* file to a folder on your computer.
- Double click the .zip file to open the .zip (you will see the .mp3 and .cdg files).
- Drag and drop the .mp3 and .cdg files to the USB flash drive.
- Remove (eject) the USB flash drive from your computer.

Turn on the Singing Machine and connect the USB flash drive.

FAQ

- **Where can I get additional help with the file formats?**
  Visit http://singingmachine.com/smc-music/ to get additional resources about the right type of FILE FORMAT for your system.

To purchase and download karaoke music, please visit http://store.singingmachine.com to access over 13,000+ of your favorite karaoke songs. You will need a USB flash drive (not included) to transfer the downloads to this unit.

Follow these easy steps:

1. Go to http://store.singingmachine.com using your internet browser, and then register.
2. Select and purchase your favorite karaoke music from the Singing Machine Download Store.
3. Download your selected purchase(s) from the Singing Machine Digital Locker to your USB flash drive.
4. Insert the USB flash drive as shown on page E13 and enjoy!

Note: Your downloaded songs can also be burned to a blank CDR/CDRW.

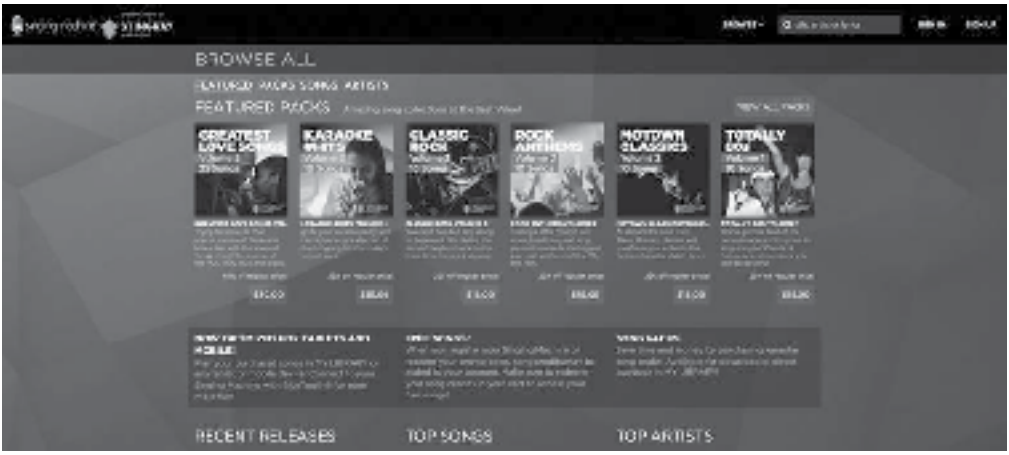

Troubleshooting Guide

Should this unit exhibit a problem, check the following before seeking service:

No Power
- Power is not on; press the **ON/OFF** button to turn power on.
- Confirm the AC adapter is connected securely to the back of the unit.
- Connect the unit to a different outlet.
- If using batteries, replace with new ones.

No Sound – General
- **MASTER VOLUME** is set to minimum; raise volume.
- Correct Function was not selected; select using the **FUNCTION** button.
- If using an external device, raise the volume.

.

No Sound – If connected to a TV
- Volume on the TV is muted or too low.
- Correct source (usually AV) was not selected on the TV's menu.

Lyrics do not appear on the TV screen
- If connected to a TV, Video plug is not connected properly; see page E5.
- If connected to a TV, select the correct source on the TV (usually AV).
- The file/track being played is not a track recording with lyrics. These are the only files that allow you to view the lyrics on the TV screen.
- Nothing will appear on the TV screen when using Line In or Bluetooth.

No sound from the microphone
- Make sure the microphone is firmly connected to the MIC 1 or MIC 2 jack.
- Make sure the **Mic's ON/OFF** switch on the Mic is set to the ON position.
- Make sure the mic's volume is not set too low.
- **MASTER VOLUME** is set to minimum; raise volume.

File(s) on USB jack not playing
- The file is corrupted; replace the file.
- The file is not in a format this unit will play.
- The connected USB device is not supported by the product.

The Bluetooth device cannot be paired or connected with the unit
- You have not activated the Bluetooth function of your device; see page E17 or refer to the Bluetooth device user's manual.
- The system is not in pairing mode; press the **PAIR** button to restart pairing.

The Music is not available on the unit after successfully connecting the Bluetooth
- Ensure your Bluetooth device can support the A2DP Bluetooth profile.
- The volume on the external Bluetooth device is set to low or muted; raise as desired.

Specifications

AUDIO

Output Power ..... 8 Watts (RMS) 10% THD
Output Impedance ..... 4 Ohms

CD SECTION

Frequency Response ..... 100Hz - 20kHz
Signal-to-Noise Ratio ..... 50dB (A-WTD)
Number of Programs ..... 20 Step Random Access Programming

BLUETOOTH

Bluetooth Version V5.0
Working Distance ..... Up to 30 feet/10 meters measured in open space

USB

Format FAT32
Maximum Compatibility 32GB

GENERAL

Power ..... DC9V Positive Center
Dimensions - Main Unit ..... 340 mm (W) x 378 mm (H) x 216 mm (D)
Weight - Main Unit ..... 2.56 Kg
Microphone ..... -74 dB 600 Ohms impedance with 6.3 mm Dynamic Microphone
Aux In ..... 3.5mm Stereo Jack

Specifications are subject to change without notice.

Bluetooth®

The Bluetooth® word mark and logos are registered trademarks owned by Bluetooth SIG, Inc. and any use of such marks by The Singing Machine Company, Inc. is under license. Other trademarks and trade names are those of their respective owners.

Mises en Garde

MISE EN GARDE
RISQUE DE CHOC ÉLECTRIQUE
NE PAS OUVRIR

MISE EN GARDE: AFIN DE RÉDUIRE LE RISQUE D'ÉLECTROCUTION, NE PAS RETIRER LE COUVERCLE (OU LE DOS DU BOÎTIER). AUCUNE PIÈCE POUVANT ÊTRE RÉPARÉE PAR L'UTILISATEUR NE SE TROUVE À L'INTÉRIEUR. POUR TOUTE RÉPARATION, CONTACTER UN TECHNICIEN COMPÉTENT.

TENSION DANGEREUSE: Le symbole de l'éclair dans un triangle équilatéral a pour but d'avertir l'utilisateur du danger présenté par des pièces non isolées à l'intérieur de l'appareil, dont la tension est suffisante pour provoquer des décharges électriques dangereuses.

ATTENTION: Le point d'exclamation à l'intérieur d'un triangle équilatéral a pour but d'avertir l'utilisateur de la présence de consignes importantes sur le fonctionnement et l'entretien (réparation) de l'appareil dans la documentation accompagnant ce produit.

AVERTISSEMENT D'ÉGOUTTEMENT: Ce produit ne doit pas être exposé à l'égouttement ni aux éclaboussures et aucun objet rempli de liquide, tel qu'un vase, ne doit être placé sur le produit.

AVERTISSEMENT D'AÉRATION: L'aération normale du produit ne doit pas être entravée pour l'usage prévu.

Ce produit est conforme aux règles 21 CF, chapitre 1 du ministère de la sante et des services sociaux, sous-chapitre J applicable à partir de la date de fabrication

Mise en garde:
- Ce lecteur de CD est muni d'un faisceau de lumière au laser. Seul un technicien qualifié devrait retirer le couvercle et tenter toute réparation ou entretien sur cet appareil afin d'éviter tout risque de blessure aux yeux.
- L'utilisation de commandes, de réglages ou de procédures autre que ceux spécifiés dans le présent document peut causer un risque d'exposition aux radiations.
- Cet appareil doit être utilisé dans un endroit aéré.

ATTENTION!
Vous risquez d'être exposé à un rayonnement laser dangereux et invisible en ouvrant ce produit et en désactivant ou rendant inopérant le dispositif de verrouillage. Évitez toute exposition directe au faisceau.

MISE EN GARDE : AFIN D'ÉVITER TOUT RISQUE D'ÉLECTROCUTION, JUMELER LA LARGE BROCHE DE LA FICHE À LA FENTE LA PLUS LARGE ET L'INSÉRER COMPLÈTEMENT.

AVERTISSEMENT: AFIN D'ENRAYER TOUT RISQUE D'ÉLECTROCUTION OU D'INCENDIE, NE PAS EXPOSER CET APPAREIL À LA PLUIE OU À L'HUMIDITÉ.

MISE EN GARDE DE LA FCC: Cet appareil peut générer ou utiliser des fréquences radio. Les modifications ou changements peuvent causer des interférences nuisibles, à moins que ces modifications ne soient approuvées expressément dans ce mode d'emploi. L'utilisateur pourrait perdre l'autorité de faire fonctionner cet équipement en cas de modification non autorisée.

Cet appareil répond aux exigences de l'alinéa 15 des règlementations FCC. Son utilisation est soumise aux deux conditions suivantes : 1) Cet appareil ne peut pas causer d'interférence nuisible et 2), Cet appareil doit accepter toute interférence reçue, incluant les interférences qui pourraient affecter son fonctionnement.

REMARQUE: Suite aux tests effectués, il est établi que cet appareil numérique de Classe B répond aux exigences de l'alinéa 15 des réglementations FCC. Ces normes sont élaborées pour vous protéger contre toute interférence nuisible en installation résidentielle. Cet appareil génère, utilise et peut émettre des fréquences radio. Par conséquent, s'il n'est pas installé et utilisé en suivant les instructions, il peut causer des interférences nuisibles aux communications radio. Cependant, aucune garantie n'est donnée concernant la possibilité d'interférence avec une installation spécifique. Si une interférence se produisait en réception radio et/ou de télédiffusion, lors de l'activation et la désactivation de l'appareil, nous vous recommandons
- Réorientez ou déplacez l'antenne de réception.
- Éloignez l'appareil du récepteur.
- Branchez l'appareil à une prise de courant différente de celle utilisée par le récepteur.
- En cas de problème, contactez le vendeur ou un technicien spécialisé en réception radio/TV.

Le régime nominal est indiqué dans la partie inférieure de l'appareil.

INDUSTRIE CANADA REMARQUE::
L'émetteur/récepteur exempt de licence contenu dans le présent appareil est conforme aux CNR d'Innovation, Sciences et Développement économique Canada applicables aux appareils radio exempts de licence. L'exploitation est autorisée aux deux conditions suivantes :
(1) L' appareil ne doit pas produire de brouillage;
(2) L' appareil doit accepter tout brouillage radioélectrique subi, même si le brouillage est susceptible d' en compromettre le fonctionnement.

CAN ICES-3(B)/NMB-3(B)

Renseignements Importants de Sécurité

1. Lisez ces instructions.
2. Conservez ces instructions.
3. Respectez toutes les mises en garde.
4. Suivez toutes les consignes.
5. N'utilisez pas cet appareil à proximité de l'eau.
6. Nettoyez l'appareil uniquement avec un chiffon sec.
7. Ne bloquez pas les ouvertures d'aération. Installez conformément selon les consignes du fabricant.
8. N'installez pas à proximité de sources de chaleur telles que les radiateurs, registres d'air chaud, cuisinières, ou autres appareils (notamment des amplificateurs) produisant de la chaleur.
9. Ne nuisez pas à la fonction de sécurité de la fiche polarisée ou de mise à la terre. Une fiche polarisée est dotée de deux broches dont l'une est plus large que l'autre. Une fiche de mise à la terre est dotée de deux broches et d'une troisième broche de mise à la terre. La broche la plus large ou la troisième broche est conçue pour votre sécurité. Lorsque la broche fournie ne convient pas à la prise, consultez un électricien afin de remplacer la prise désuète.
10. Protégez le cordon d'alimentation afin que personne ne marche dessus ou le pince, particulièrement au niveau des broches, de la prise et du point où ils sortent de l'appareil.
11. Utilisez seulement les accessoires spécifiés par le fabricant.
12. Utilisez seulement avec un chariot, une sellette, un trépied, un support ou une table. Lorsqu'un chariot est utilisé, prenez garde de ne pas déplacer la combinaison chariot/appareil pour éviter toute blessure causée par un renversement.

13. Débranchez cet appareil durant un orage ou lorsqu'il n'est pas utilisé pendant de longues périodes.
14. Confiez toutes les réparations à un technicien compétent. La réparation s'avère nécessaire lorsque l'appareil a été endommagé, par exemple, si le cordon d'alimentation ou la fiche a été endommagé, du liquide a été renversé ou des objets sont tombés dans l'appareil, ou si l'appareil a été exposé à la pluie ou à l'humidité, ne fonctionne pas normalement, ou a été échappé.
15. AVERTISSEMENT : Pour réduire le risque d'électrocution, évitez d'exposer l'appareil à la pluie ou à l'humidité. Ne déposez pas d'objets remplis d'eau, tels qu'un vase, sur l'appareil.
16. La fiche de secteur c.a. est utilisée pour débrancher l'appareil et doit être facilement accessible et utilisable durant l'usage prévu. Afin de couper complètement l'alimentation de l'appareil, la fiche de secteur doit être complètement débranchée de la prise c.a.
17. MISE EN GARDE : Afin de réduire le risque d'incendie ou d'explosion, n'exposez pas les piles à une source de chaleur excessive telle que le soleil, le feu ou autre.

Visit Our Website: www.singingmachine.com
Visite nuestro sitio web: www.singingmachine.com
Visitez notre site Internet au: www.singingmachine.com

Copyright © 2019 - All Rights Reserved.
Derechos de autor © 2019 Todos los derechos reservados.
Droit d'auteur © 2019 Tous Droits Réservés.

The Singing Machine Company, Inc.
4060 E Jurupa Street, Unit B
Ontario, CA 91761-1413 USA

The Responsible Party
Company Name : The Singing Machine Company, Inc.
Address : 6301 NW 5th Way, Suite 2900, Fort Lauderdale, FL33309, USA
Telephone : 954 -596-1000
Website : www.singingmachine.com

PRINTED IN CHINA
IMPRESO EN CHINA
IMPRIMÉ EN CHINE
712-xxxx-ESF01-US