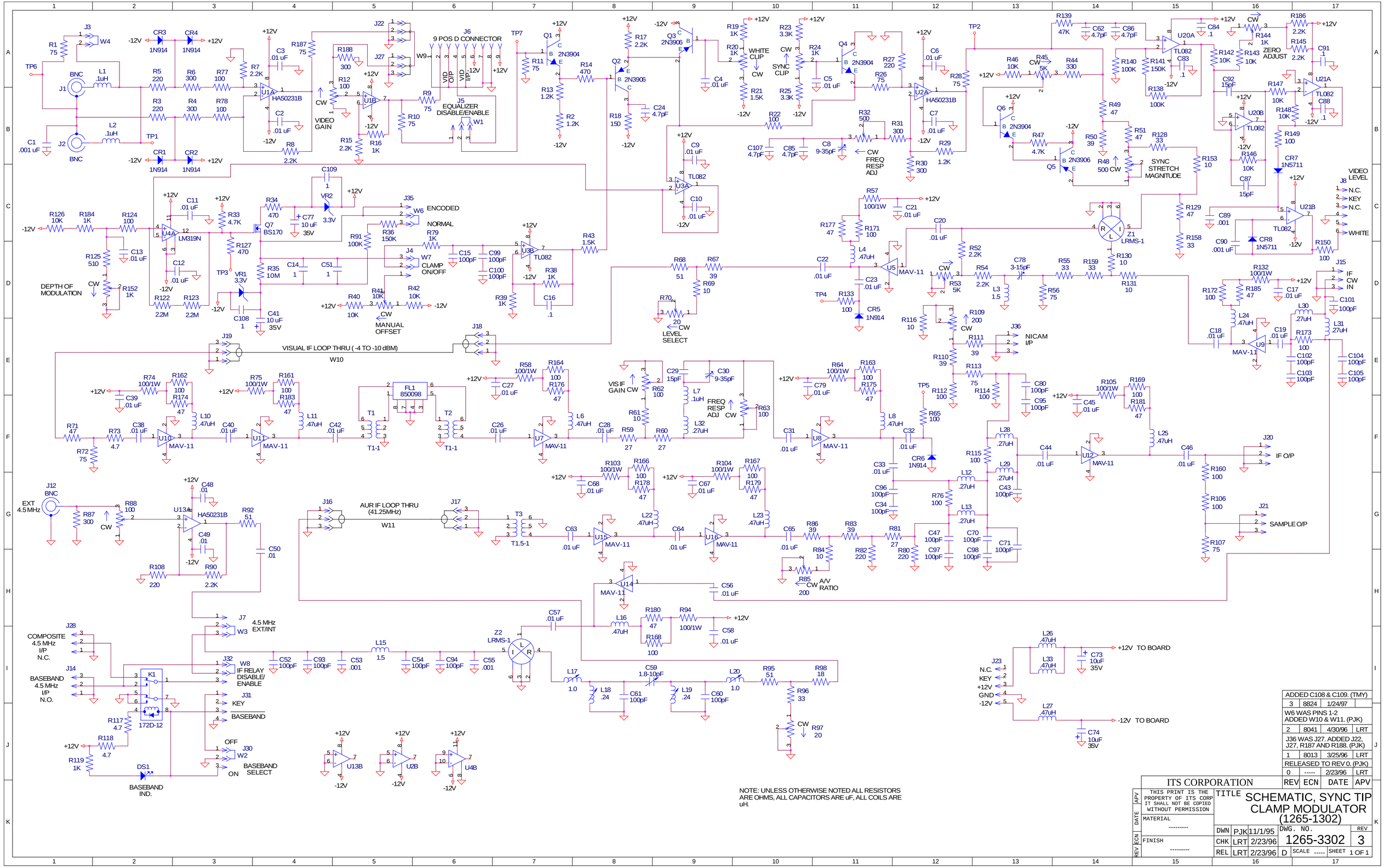

NOTE: UNLESS OTHERWISE NOTED ALL RESISTORS ARE OHMS, ALL CAPACITORS ARE uF, ALL COILS ARE uH.

ADDED C108 & C109. (TMY)			
3	8824	1/24/97	
W6 WAS PINS 1-2 ADDED W10 & W11. (PJK)			
2	8041	4/30/96	LRT
J36 WAS J27. ADDED J22, J27, R187 AND R188. (PJK)			
1	8013	3/25/96	LRT
RELEASED TO REV 0. (PJK)			
0	-----	2/23/96	LRT

ITS CORPORATION

REV	ECN	DATE	APV

THIS PRINT IS THE PROPERTY OF ITS CORP IT SHALL NOT BE COPIED WITHOUT PERMISSION

MATERIAL ---------

FINISH ---------

TITLE SCHEMATIC, SYNC TIP CLAMP MODULATOR (1265-1302)

DWN	PJK	11/1/95	DWG. NO. 1265-3302 REV 3
CHK	LRT	2/23/96	
REL	LRT	2/23/96	D SCALE ----- SHEET 1 OF 1

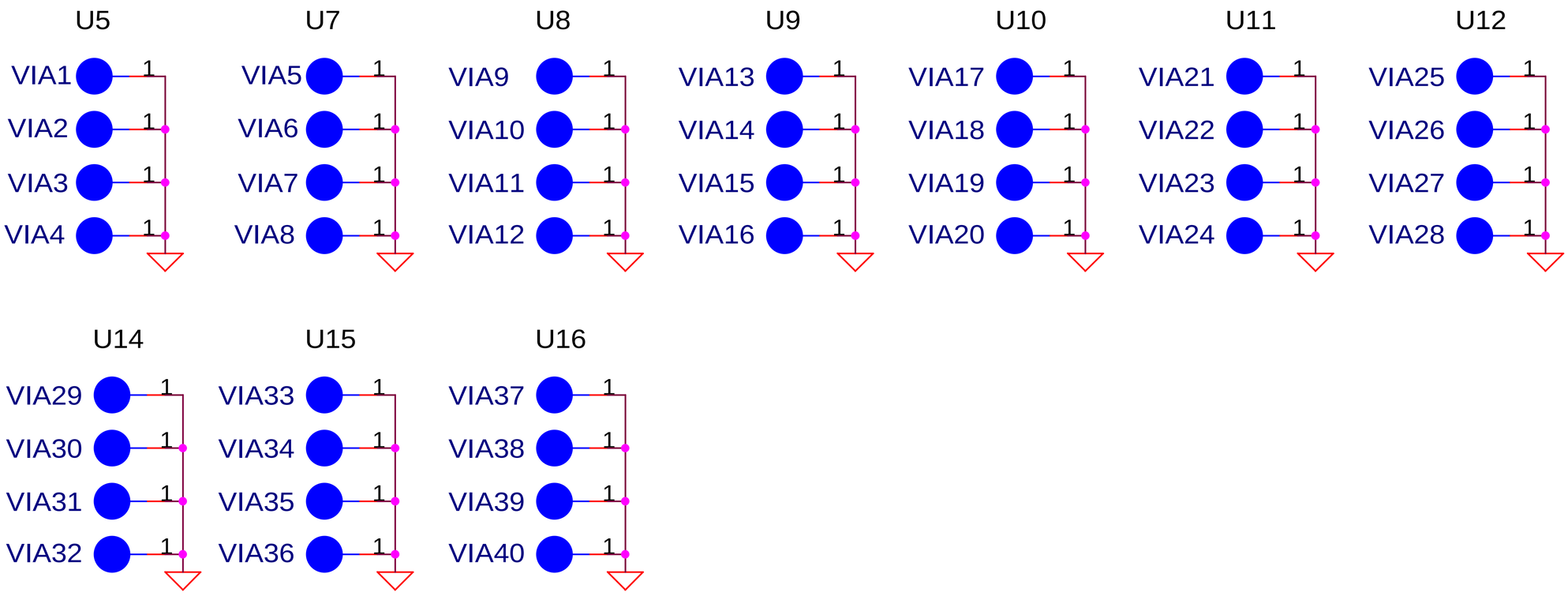

ITS CORPORATION	REV	ECN	DATE	APV

THIS PRINT IS THE PROPERTY OF ITS CORP IT SHALL NOT BE COPIED WITHOUT PERMISSION

MATERIAL

FINISH

APV | DATE | ECN | REV

TITLE SCHEMATIC, SYNC TIP CLAMP MODULATOR (1265-1302

DWN	PJK	3/25/96	DWG. NO. 1265-3302	REV 1
CHK				
REL			A	SCALE

SHEET 2 OF 2