EXHIBIT B – User Manual

FCC ID# CGGAA2

Sentrol RCR

Range-Controlled Radar Detector

Models: RCR-A (Form A)
RCR-C (Form C)

Installation Instructions

Description

The RCR detector combines range-controlled radar (RCR) technology with a passive infrared (PIR) system to increase false alarm immunity by allowing it to sense human-sized objects within a specified range. Both the RCR and PIR systems must be triggered to set off an alarm, unless in Microwave only mode.

The detector is designed to use a 12VDC power supply provided by a UL Listed alarm control panel.

Features

The detector provides the following features:

- **High-security mode -** Internal jumper allows you to disable the PIR, and use the RCR system only to detect intruders faster. This mode can be used for covert installations (mounted behind ceiling panels or walls).
- **Selectable range up to 35 feet -** Internal jumper allows radar range selection to optimize coverage.
- **LED indicator -** A multi-color LED provides detector status.
- **Tamper switch (RCR-C only) -** Activated when the pins on the circuit board are removed from the terminal sockets on the base.

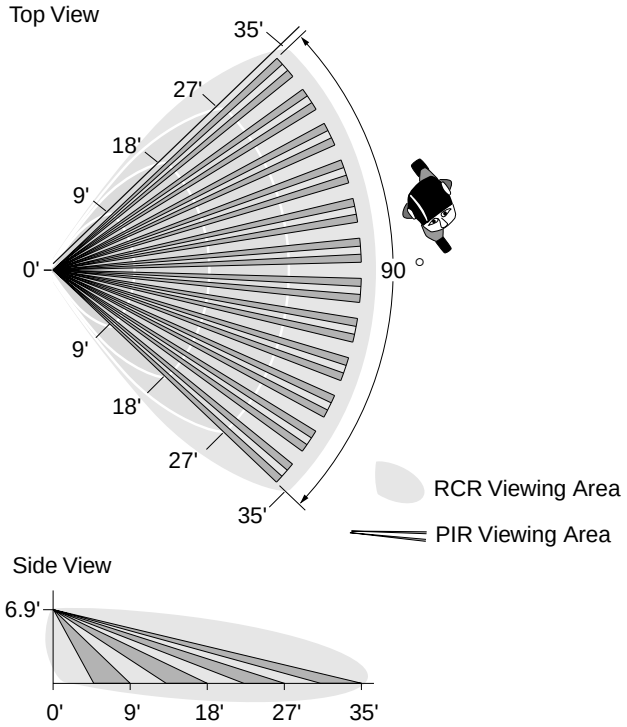

Figure 2 - RCR and PIR Coverage Patterns

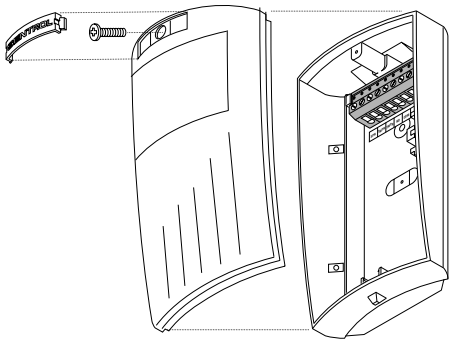

Figure 1 - Detector (exploded)

Parts

The following parts are included with the detector:

- RCR detector
- 1 screw to join the case halves
- 3 factory-installed jumpers

Selecting a Location for the Detector

The detector can be mounted in a corner or on a flat wall. Use the following guidelines to determine the best location to install the detector:

- Mount the detector so the expected movement of an intruder is across the detection pattern. See Figure 2.
- Mount the detector on a stable surface 7 to 9 feet high.
- DO NOT mount the detector within 2 feet of any metallic objects.
- DO NOT place any objects in front of the detector that may prevent a clear line of sight. (Not applicable in RCR only mode.)
- Avoid locations that expose the detector to possible false alarm sources such as:
  – Moving or vibrating objects (fans, pulleys, conveyor belts)
  – Electronic fields (electric motors, high voltage equipment)
  – Water spray or corrosive environments
  – Heat sources in the field of view (heaters, radiators)
  – Windows in the field of view
  – Strong air drafts on the detector (fans, air conditioners)
- When installing multiple detectors:
  – DO NOT mount detectors facing each other
  – Use the 9-foot range when mounting detectors back to back
  – Mount them at least 20 feet apart
  – Use shorter range settings to avoid overlapping radar coverage

Installing the Detector

All wiring must conform to National Electric Code (NEC) and/or local codes having jurisdiction.

> **Important: DO NOT use this device for safety interlock applications.**

Use the following steps to install the detector:

1. Run the security system wiring to the detector location.
2. To remove the front cover/electronic module, press down on the lever at the bottom of the unit and pull the cover off. Remove the nameplate and loosen the screw if necessary. To remove the nameplate, insert a small screwdriver into one of the nameplate side slots and gently push in on the nameplate. See Figure 1.

   CAUTION! Use anti-static precautions when handling the circuit board.

3. If necessary, set the jumpers on the circuit board. See *Setting the Jumpers*.
4. Remove the appropriate wiring and mounting knockout holes from the back cover. The detector can be mounted on a flat wall or in a corner. See Figure 3.
5. Pull the wires through the knockout holes and use the two screws provided to attach the base to the wall. Use screw anchors if necessary.
6. Strip 1/4 inch of insulation from each wire.
7. Run each wire through the strain relief and under the appropriate screw terminals on the base and tighten the screws. See Figure 3.
8. Line up the tabs on the bottom of the cover/electronic module with the corresponding tabs on bottom of the base and snap the cover/electronic module firmly down onto the base.
9. Tighten the screw and replace the nameplate. See Figure 1.
10. Apply power. The green LED should light for approximately 25 seconds and then go out.
11. Walk test the coverage pattern as follows:

    – Walk throughout the intended coverage area.

    – Verify the detector alarms. See *Understanding the LED*.

    Note: Most units walk test more accurately if the person testing waits 10 seconds between tripping the unit and walking again. This allows the detector to stabilize between trips.

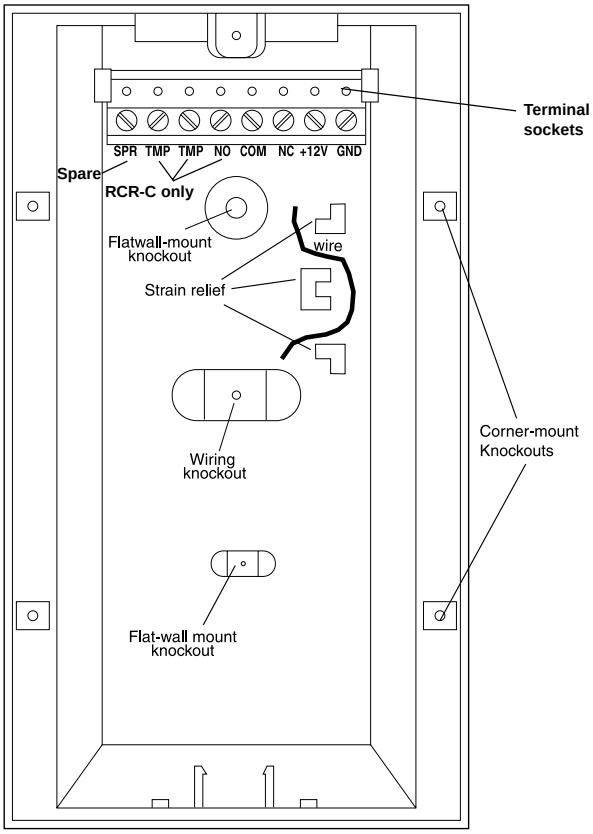

Figure 3 - Detector Base

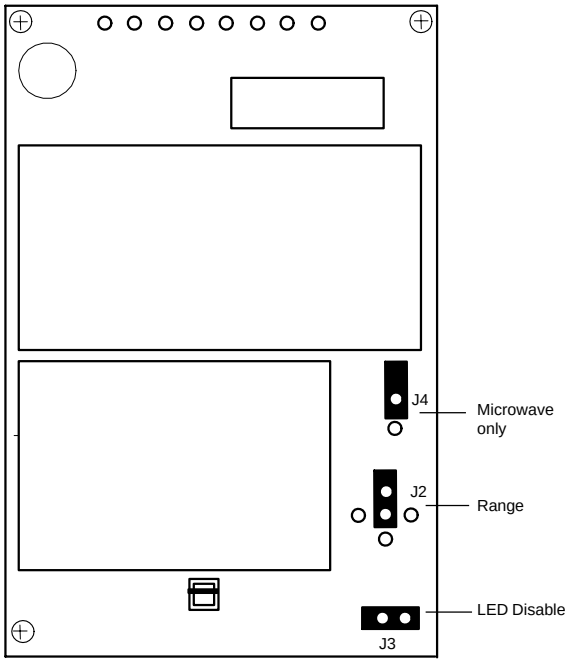

Figure 4 - Main Circuit Board

Setting the Jumpers

The detector provides jumpers to select the detection range and PIR and LED operation. See Figure 4.

J2 Range - Use the jumper to cover the center pin and the pin indicating the desired range. No jumper = 27 feet and under.

9 feet and under

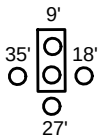

18 feet and under

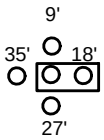

27 feet and under

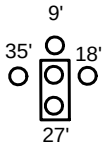

35 feet and under **(factory default)**

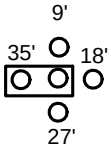

Important: You need to set J2 as close to the intended coverage range as possible. Overshooting the coverage area may cause false alarms.

J3 LED - ON = LED enabled **(factory default)**
OFF = LED disabled

J4 PIR - ON = RCR Microwave only
OFF = PIR enabled **(factory default)**

SB01 Swivel Mount Bracket

For ceiling-mount applications that require 90 degree coverage, an optional ceiling-mount swivel bracket (SB01) is available from Interlogix. See Figure 5.

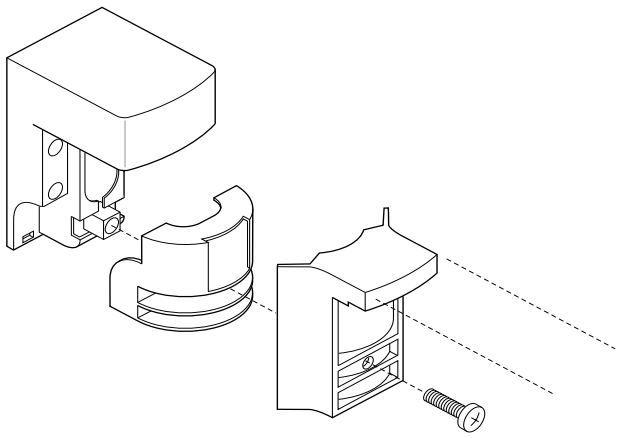

Figure 5 - SBO1 Swivel-Mount Bracket

Maintaining the Detector

When installed and used properly, the detector provides years of service with minimal maintenance. You should walk test the detector annually to ensure proper operation.

When the cover is removed, power is interrupted to the sensor. Once the cover has been replaced, the green LED will illuminate for 15 seconds while the sensor warms up. After the green LED goes off, wait one minute and walk test the sensor.

Understanding the LED

The multi-color LED located on the bottom of the detector indicates the status of the unit as described in the following table.

LED	Status
Red	PIR and RCR detection. The detector is in alarm and the relay has switched.
Green	PIR detection only (no alarm).
Yellow	RCR detection only (no alarm).

In RCR microwave only mode:

LED	Status
Red	RCR microwave detection.

Specifications

Input voltage.....8.5 to 18 VDC (UL: 10 to 16VDC)
Typical current.....20mA
Maximum current.....27mA
Electrical configuration.....RCR-A: Form A
RCR-C: Form C
Relay rating.....RCR-A: 200VDC, 500mA max.
RCR-C: 200VDC, 250mA max.
Tamper (RCR-C only).....100ma, 50VDC
Detection range.....35' (10.7 m) x 90°
Target velocity.....0.5 ft/sec to 5 ft/sec
Alarm duration.....5 sec
Mounting height.....7' to 9' (2.1 to 2.75 m)
Operating temperature.....32° to 122°F (0° to 50°C)
Relative humidity.....5 to 95% non-condensing
Dimensions:
Width.....2.8" (7.1 cm)
Depth.....2.3" (5.7 cm)
Height.....5.1" (13 cm)
Weight.....6 oz (170 g)
Color.....white
Field wiring size.....16-24 AWG

FCC Compliance

This device complies with Part 15 of the FCC rules. Operation is subject to the following two conditions:

(1) this device may not cause harmful interference

(2) this device must accept any interference received, including interference that may cause undesired operation.

FCC ID:

Product Ordering

Model Number	Description
RCR-A	Range-controlled radar detector with form A relay
RCR-C	Range-controlled radar detector with form C relay and tamper contacts
Accessories	
SB01	Swivel-mount bracket

interlogix
Security & Life Safety Group
Caddx | ESL | GBC | ITI | Kalatel | Sentrol

12345 SW Leveton Dr. Tualatin, OR 97062
PH 503.692.4052 **FX** 503.691.7566 www.interlogixinc.com
USA & Canada: 800.547.2556
Technical Service: 800.648.7424
FaxBack: 800.483.2495

1035261 Rev A 04/01