Radiar AFD1

Radiar AFD1 is a BLE5.2 controllable, Nordic based DALI controller. It operates on 90-277 VAC input voltage range and can be connected to 1 DALI LED driver. This device also has a 12 VDC auxiliary output to power the sensors.

Table of Contents

1. Features 3
2. Specifications 3
3. Device Dimensions 5
4. Wire Description 6
5. Antenna Information 7
6. Wiring Diagram 8
7. Warning 8
8. Ordering Information 9
9. Compatible Devices 9

1. Features

- DALI supporting up to 1 slave device
- BLE5.2 based non-flooding intelligent communication
- 12 VDC auxiliary output
- Zero downtime Over-the-Air (OTA) firmware updates
- Compact form factor for easy integration into luminaires

2. Specifications

Electrical	Min.	Typ.	Max.	Unit	Remarks
Input Voltage	90		277	Vac	Rated Input voltage
Input Current		10		mA	@ 230 V
Power Consumption		2		W	Active Power
Supply Frequency	50	_	60	Hz	
Inrush Current		4		A	
Surge Transient Protection			4	kV	L-N, Bi wave
Standby Consumption			7.71	mA	@Rated input voltage
Connection Distance (Device to Device by Mesh)		30		m	In an open office environment (Line of Sight)

DALI	Min.	Typ.	Max.	Unit	Remarks
Number of Slaves			1	pc	
Bus Supply Voltage	11	12	13	V	
Bus Supply Current		2		mA	
Dimming Range	0		100	%	
Protocol	101 / 103 / 207 / 209				DALI2.0
Chipset used					Nordic
Dimming Curve	Linear / Logarithmic				Logarithmic by default

Bluetooth	Min.	Typ.	Max.	Unit	Remarks
Frequency Range	2400		2483	MHz	
TX Power			8	dBm	With 150mm external wire antenna
RX sensitivity		-92		dBm	

Environmental	Min.	Typ.	Max.	Unit	Remarks
Ambient Temperature	-20		50	ºC	
Relative Humidity	20		85	%	

Mechanical	Min.	Typ.	Max.	Unit	Remarks
Dimensions		43 x 35 x 20		mm	L x W x H
Dimensions		1.7 x 1.4 x 0.8		inch	L x W x H
Net Weight		30.00		g	In gram
Net Weight		1.06		oz	In ounce

3. Device Dimensions

Radiar AFD1 Top View: 43mm x 35mm x 20mm (L x W x H).

Case Material: White coloured V0 PC

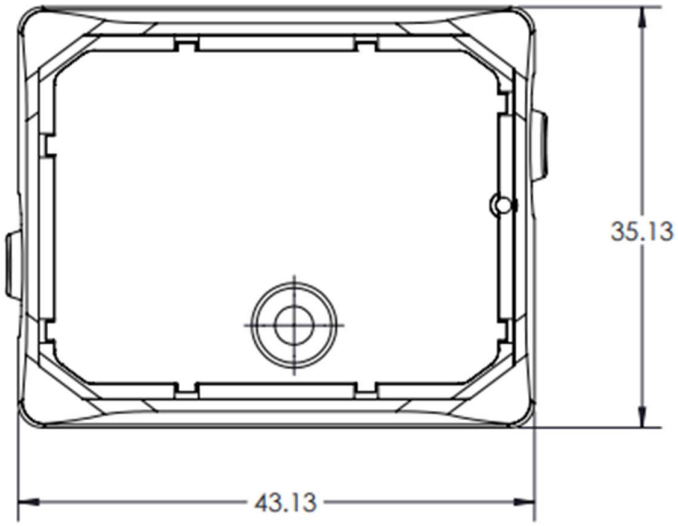

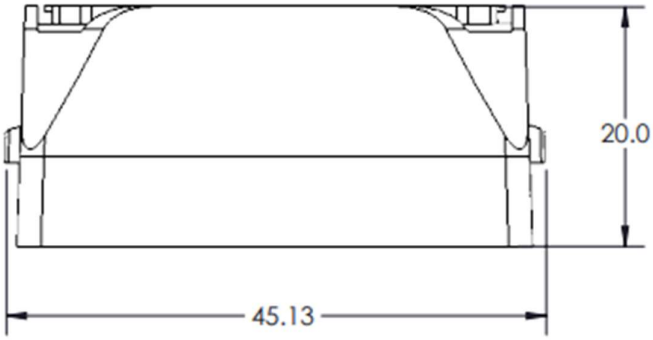

4. Wire Description

SI.NO	NAME	COLOR	GAUGE	RATING	DESCRIPTION
1	Line	Black	20 AWG	600V	100-277VAC
2	Neutral	White	20 AWG	600V	Common neutral
3	DALI	Blue	28 AWG	300V	DALI+
4	DALI	Grey	28 AWG	300V	DALI -
5	12VDC	Red	28 AWG	300V	•12 VDC auxiliary output
6	Ground	Grey	28 AWG	300V	Common ground

5. Antenna Information

150mm wire antenna

Antenna Properties	
Frequency range	2.4 GHz-2.5GHz
Impedance	50 Ω Nominal
VSWR	1.92:1 Max
Return loss	-10 dB Max
Gain(peak)	2 dBi
Cable loss	0.3 dBi Max
Polarization	Linear

6. Wiring Diagram

1) Connecting DALI drivers to the Radiar AFD1 controller

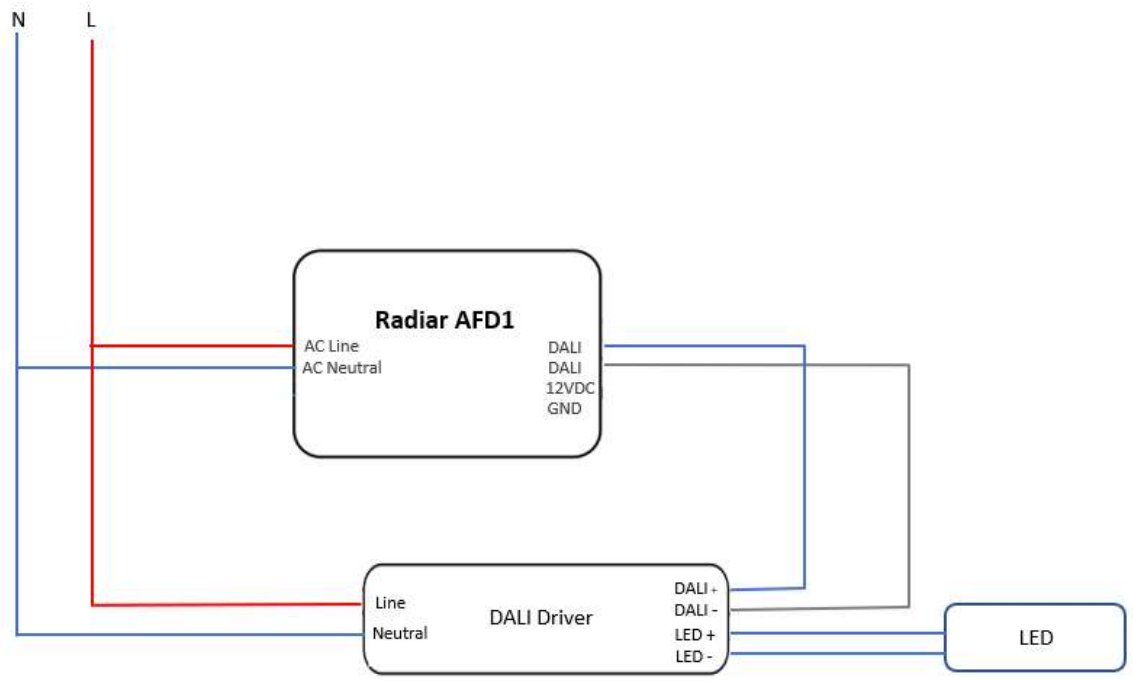

7. Warning

1. To prevent the device from any defect, please handle and store it with care.

- Do not drop or give shock.
- Do not store in very humid location or at extreme temperature.
- Do not open or disassemble the product.

2. Static electricity or surge voltage may damage the components inside device, as such please observe proper anti-electrostatic working process.

- People handing the device should be well grounded (e.g. using ESD wrist band) and wear antistatic working clothes and gloves.
- All related devices and instruments in the production line should be well grounded (e.g. working table, measuring equipment, assembly jigs).

3. Observe the correct polarity of output terminal.

4. Avoid input voltage exceeds the maximum rating, which will cause damage to the circuit and result in malfunction.

5. Do not block any ventilation openings. Install in accordance with the manufacturer's instructions.

6. Refer all servicing to qualified personnel. Servicing is required when the apparatus has been damaged in any way, such as power supply cord or plug is damaged, liquid has been spilled or objects have fallen into the apparatus has been exposed to rain or moisture, does not operate normally, or has been dropped.

7. To reduce the risk of fire or electric shock, do not expose this apparatus to rain or moisture. The apparatus shall not be exposed to dripping or splashing and that objects filled with liquids, such as vases, shall not be placed on apparatus.

8. To prevent injury, this apparatus must be securely attached to the floor/wall in accordance with the installation instruction.

8. Ordering Information

Product Code	Product Name	Product Description	Communication	Voltage Rating
WCAD1N	Radiar AFD1	1 Slave DALI Controller	BLE5.2	90-277V AC

9. Compatible Devices

- iOS - iPhone & iPad (version 9.0 and above)
- Android- almost all device (version 6.0 and above)

Register and view our knowledge base for commissioning and control information
Link - https://share.hsforms.com/1LxreXGbFQayBESIZg48_ng4ocng

Download our mobile application in the following link

- Search **Lumos Controls** App on the App Store / Play Store for iOS / Android device or use the below link
- **Android**: https://play.google.com/store/apps/details?id=com.wisilica.Home&hl=en_US
- **iOS**: Lumos Controls on the App Store (apple.com)

CONNECTING THINGS TO LIFE

WiSilica Inc
23282 Mill Creek Dr #340, Laguna Hills, CA 92653
United States of America

info@wisilica.com www.wisilica.com

Version 1.0

FCC Statement

This equipment has been tested and found to comply with the limits for a Class B digital device, pursuant to part 15 of the FCC Rules. These limits are designed to provide reasonable protection against harmful interference in a residential installation. This equipment generates, uses and can radiate radio frequency energy and, if not installed and used in accordance with the instructions, may cause harmful interference to radio communications. However, there is no guarantee that interference will not occur in a particular installation. If this equipment does cause harmful interference to radio or television reception, which can be determined by turning the equipment off and on, the user is encouraged to try to correct the interference by one or more of the following measures:

·Reorient or relocate the receiving antenna.

·Increase the separation between the equipment and receiver.

·Connect the equipment into an outlet on a circuit different from that to which the receiver is connected.

·Consult the dealer or an experienced radio/TV technician for help.

Caution: Any changes or modifications to this device not explicitly approved by manufacturer could void your authority to operate this equipment.

This device complies with part 15 of the FCC Rules. Operation is subject to the following two conditions: (1) This device may not cause harmful interference, and (2) this device must accept any interference received, including interference that may cause undesired operation.

RF Exposure Information

This equipment complies with FCC radiation exposure limits set forth for an uncontrolled environment. This equipment should be installed and operated with minimum distance 20cm between the radiator and your body.