Model Name : CSM1465A

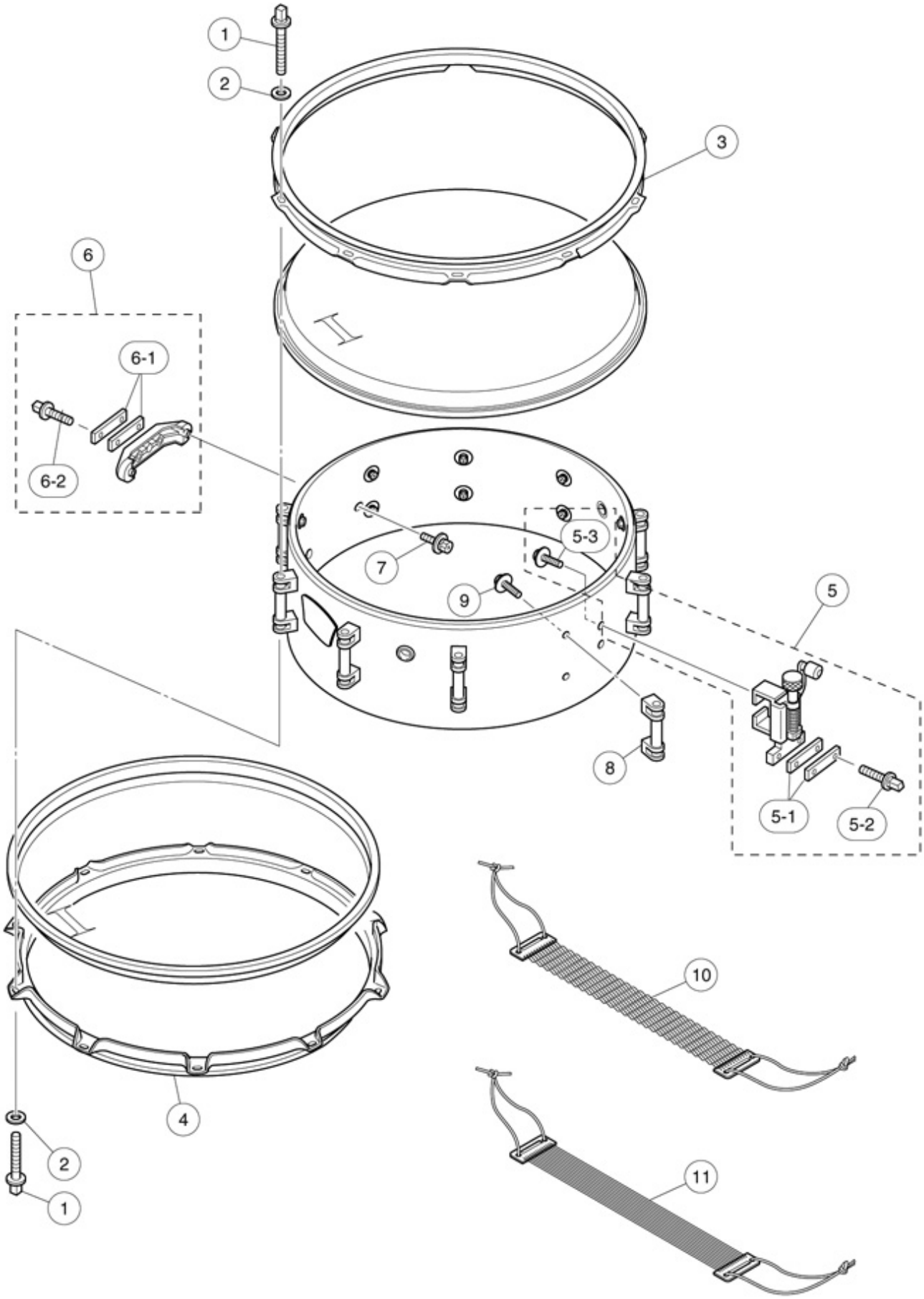

Model Name : CSM1465A

Ref No.	Parts No.(ChangeNo.)	English Name	Minimum Delivery	Accept order or not
1	U0043051	TENSION ROD L=40(N)	1 PC	
10	U0241470	SN-14RSC ASS'Y CSM1450A	1 PC	
11	U0241480	SN-14SWC ASS'Y CSM1450A	1 PC	
2	U0045010	WASHER	1 PC	
3	U0963280	DYNA HOOP 14X10H CUSTOM DRUM	1 PC	
4	U0963340	DYNA HOOP 14X10HS1 CUSTOM DRUM	1 PC	
5	U0201116	STRAINER (PCR)L (RELEASE SIDE) BSD-09	1 PC	
5-1	U0204210	SNARE HOLDING BASE (2) MSD-0104	1 PC	
5-2	U0603480	DRUM KEY BOLT M5X13 MSD-0104	1 PC	
5-3	U0035670	MOUNTING HEX BOLT WASHER M4X16 ZY	1 PC	
6	U0201350	STRAINER (B-7)R ASS'Y 11xx/15xx	1 PC	
6-1	U0204210	SNARE HOLDING BASE (2) MSD-0104	1 PC	
6-2	U0603480	DRUM KEY BOLT M5X13 MSD-0104	1 PC	
7	U0035640	HEXAGONAL BOLT M4X14 ZY	1 PC	
8	U0031230	TUBE LUG 6.5inch	1 PC.	
9	U0035620	HEXGONAL BOLT M4X10 ZY	1 PC	