Model Name : OSM-1465

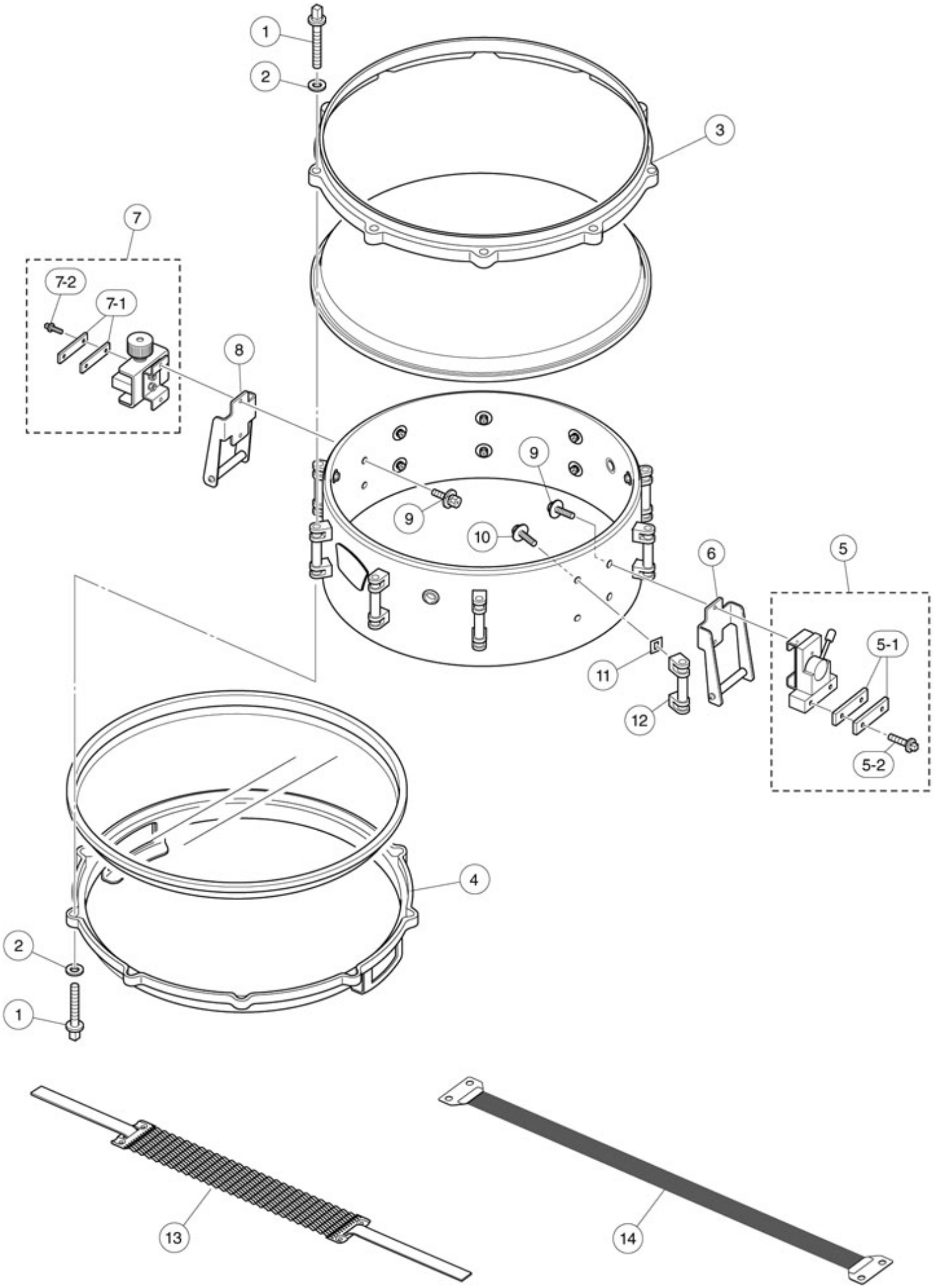

Model Name : OSM-1465

Ref No.	Parts No.(ChangeNo.)	English Name	Minimum Order Quantity	Accept order or not
1	W8019020	TENSION ROD L-40 CHN CR	1 PC	
10	ZD216400	+ HEX BOLT SPC S/PW M4X12 MFZN2BL	1 PC	
11	ZH323200	LUG PLATE TUBE	1 ST	
12	W7953830	TUBE LUG ASSY 6.5 CHN 3	1 PC	
13	ZR306200	SNARE ASSY DT-EX	1 PC.	
14	ZR306600	SNARE ASSY K2	1 PC.	
2	W8020210	TENSION ROD WASHER 1 CHN	1 PC	
3	W7692500	AL-DC HOOP 14X10H 2	1 PC	
4	ZR398800	AL-DC HOOP ASSY 14X10HS 4	1 PC.	
5	ZR305200	STRAINER ASSY K2 L	1 PC.	
5-1	WW791600	SNARE HOLDING PLATE 2 CHN	1 PC	
5-2	U0603480	DRUM KEY BOLT M5X13	1 PC	
6	ZR504400	GUIDE ROLLER K2	1 PC.	
7	ZR305300	STRAINER ASSY K2 R	1 PC.	
7-1	WW791600	SNARE HOLDING PLATE 2 CHN	1 PC	
7-2	U0603480	DRUM KEY BOLT M5X13	1 PC	
9	ZT781700	+ HEX BOLT SPC S/PW M4X17 MFZN2BL	1 PC.	