User Manual of CL02

Clock Radio

CL02

USER MANUAL

Made for iPod iPhone iPad

Contents

Important Safety Instructions **2**
Safety 2

Identifying the Parts **5**

Connections **6**
Connect to an external device 6
Set up the FM aerial 6
Connect Power 6
For First-time use BACKUP Battery: 6
To Replace the BACKUP Battery: 6

General Operation **7**
Turn ON/OFF 7
Select Modes 7
Adjust the Brightness 7
Set the NAP Timer 7
Set the Clock 7
Set the alarm timer 7
Set the sleep timer 8

LINE IN Operation **8**

iPod/iPhone Operation **8**
Listen to the iPod/iPhone 8
Charge the iPod/iPhone 8

Bluetooth Operation **9**
Pair Bluetooth-enabled Devices 9
Listen to Music from Bluetooth Device 9

Listening to the FM Radio **10**
Auto Scan and Save Preset Station 10
Tuning in a Station 10
Presetting Stations Manually 10

Troubleshooting **10**

Specifications **11**

Important Safety Instructions

This lightning flash with arrowhead symbol within an equilateral triangle is intended to alert the user to the presence of non-insulated "dangerous voltage" within the product's enclosure that may be of sufficient magnitude to constitute a risk of electric shock.

The exclamation point within an equilateral triangle is intended to alert the user to the presence of important operating and maintenance instructions in the literature accompanying the appliance.

Safety

1 **Read these instructions** – All the safety and operating instructions should be read before this product is operated.

2 **Keep these instructions** – The safety and operating instructions should be retained for future reference.

3 **Heed all warnings** – All warnings on the appliance and in the operating instructions should be adhered to.

4 **Follow all instructions** – All operating and use instructions should be followed.

5 Do not use this apparatus near water – The appliance should not be used near water or moisture – for example, in a wet basement or near a swimming pool, and the like.

6 Clean only with dry cloth.

7 Do not block any ventilation openings. Install in accordance with the manufacturer's instructions.

8 Do not install near any heat sources such as radiators, heat registers, stoves, or other apparatus (including amplifiers) that produce heat.

9 Do not defeat the safety purpose of the polarized or grounding plug. A polarized plug has two blades with one wider than the other. A grounding plug has two blades and a third grounding prong. The wide blade or the third prong is provided for your safety. If the provided plug does not fit into your outlet, consult an electrician for replacement of the obsolete outlet.

10 Protect the power cord from being walked on or pinched particularly at the plugs, convenience receptacles, and at the point where they exit from the apparatus.

11 Only use attachments/accessories specified by the manufacturer.

12 Use only with the cart, stand, tripod, bracket, or table specified by the manufacturer, or sold with the apparatus. When a cart or rack is used, use caution when moving the cart/apparatus combination to avoid injury from tip-over.

13 Unplug the apparatus during lightning storms or when unused for long periods of time.

14 Refer all servicing to qualified personnel. Servicing is required when the apparatus has been damaged in any way, such as power supply cord or plug is damaged, liquid has been spilled or objects have fallen into the apparatus has been exposed to rain or moisture, does not operate normally, or has been dropped.

Caution:

- Use of controls or adjustments or performance of procedures other than those described herein, may result in hazardous radiation exposure or other unsafe operation.
- To reduce the risk of fire or electric shock, do not expose this apparatus to rain or moisture. The apparatus must not be exposed to dripping or splashing and objects filled with liquids, such as vases, must not be placed on apparatus.
- The external adapter is used as the disconnect device, the disconnect device shall remain readily operable.
- Adapter model: K15S050200U
- Adapter company: Dongguan Guanjin Electronics Technology Co., Ltd

Warning

- The battery (battery or batteries or battery pack) must not be exposed to excessive heat such as sunshine, fire or the like.
- Before operating this system, check the voltage of this system to see if it is identical to the voltage of your local power supply.
- The ventilation should not be impeded by covering the ventilation openings with items such as newspaper, table-cloths, curtains etc. Make sure there is at least 20 cm of space above and at least 5cm of space on each side of the unit.
- Do not place this unit close to strong magnetic fields.
- Do not place the unit on the amplifier or receiver.
- Do not place this unit close to damp areas as the moisture will affect the life of the laser head.
- Should any solid object or liquid fall into the system, unplug the system and have it checked by qualified personnel before operating it any further.
- Do not attempt to clean the unit with chemical solvents as this might damage the finish. Use a clean, dry or slightly damp cloth.
- When removing the power plug from the wall outlet, always pull directly on the plug, never yank on the cord.
- No naked flame sources, such as lighted candles, should be placed on the apparatus.
- Changes or modifications to this unit not expressly approved by the party responsible for compliance will void the user's authority to operate the equipment.
- The marking label is pasted on the bottom of the equipment.

⚠ **DO NOT INGEST BATTERY, CHEMICAL BURN HAZARD**

The unit supplied with this product contains a coin/button cell battery. If the coin/button cell battery is swallowed, it can cause sever internal burns in just 2 hours and lead to death. Keep new and used batteries away from children. If the battery compartment does not close securely, stop using the product and keep it away from children. If you think batteries might have been swallowed or placed inside any part of the body, seek immediate medical attention.

This device complies with Industry Canada licence-exempt RSS standard(s). Operation is subject to the following two conditions: (1) this device may not cause interference, and (2) this device must accept any interference, including interference that may cause undesired operation of the device.

FCC STATEMENT

This device complies with Part 15 of the FCC Rules. Operation is subject to the following two conditions:

(1) this device may not cause harmful interference, and

(2) this device must accept any interference received, including interference that may cause undesired operation.

- "Warning: Changes or modifications to this unit not expressly approved by the party responsible for compliance could void the user's authority to operate the equipment."
- "NOTE: This equipment has been tested and found to comply with the limits for a Class B digital device, pursuant to Part 15 of the FCC Rules. These limits are designed to provide reasonable protection against harmful interference in a residential installation. This equipment generates, uses and can radiate radio frequency energy and, if not installed and used in accordance with the instructions, may cause harmful interference to radio communications. However, there is no guarantee that interference will not occur in a particular installation. If this equipment does cause harmful interference to radio or television reception, which can be determined by turning the equipment off and on, the user is encouraged to try to correct the interference by one or more of the following measures:
- Reorient or relocate the receiving antenna.
- Increase the separation between the equipment and receiver.
- Connect the equipment into an outlet on a circuit different from that to which the receiver is connected.
- Consult the dealer or an experienced radio/TV technician for help."

FCC ID: Z8M-CR02

Identifying the Parts

Front View

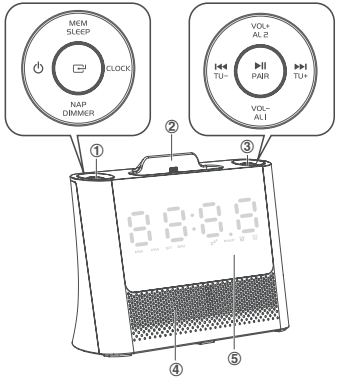

1 Buttons

- ⏻
  Turn on or turn off the unit.
- ⊡
  Select a source.
- **CLOCK**
  View the current radio frequency.
  Press and hold to set the time.
  View the time.
- **MEM / SLEEP**
  Press and hold to preset stations manually.
  Set the sleep timer.
- **NAP/DIMMER**
  Set the NAP timer.
  In Standby mode, adjust brightness level.

2 DOCK
iPod/iPhone Docking

3 Buttons

- **►❚❚/PAIR**
  Play/pause/resume playback.
  Press and hold to preset stations automaticly.
  Press and hold to Activate the pairing function in Bluetooth mode and disconnect the existing paired Bluetooth device.
- **VOL-/AL1, VOL+/AL2**
  Increases/decrease the volume.
  Press and hold the bottons to set the alarm 1/2.
- **❙◄◄/TU-, TU+/►►❙**
  In the dock mode, skip to previous/next track.
  In the FM mode, search radio stations manually.
  In the clock setting mode, press the buttons to set the clock.

4 Speakers

5 Display
Show current status.

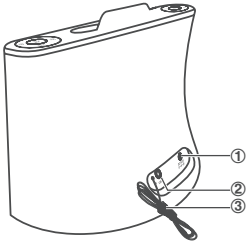

Rear View

1 DC IN 5V Socket
Connect to power cord.

2 LINE IN Socket
Connect to an external audio device.

3 FM Aerial

Connections

Connect to an external device

- Use a 3.5mm to 3.5mm audio cable (included) to connect the external audio device headphone socket to the **LINE IN** socket on the unit.

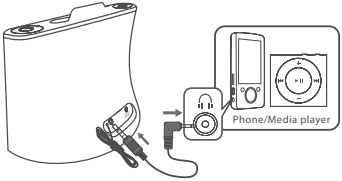

Set up the FM aerial

- Unwind the coiled FM aerial at the back of the docking station.

  IMPORTANT: You may need to adjust the position of the FM aerial when tuning the radio to receive the strongest signal.

  Never leave the aerial where it can be pulled by young children.

Connect Power

1. Slot the jack plug on the power adaptor into the power point in the underside of the base as shown in the diagram above.
2. Slot the power adaptor into a wall socket and turn the power on, if required.

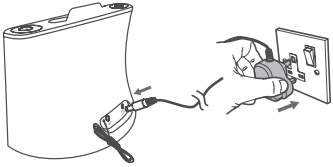

Note:

- You need to connect the DC power to turn on the unit , battery only for back up.
- If the unit does not display or no response, maybe the battery is low power, that need to disconnect the DC power and replace a new battery, then reconnect DC power and reset the clock.

For First-time use BACKUP Battery:

Remove the protective tab to activate the backup battery.

To Replace the BACKUP Battery:

(1) Press down the flip on the left.

(2) Pull out the battery tray and remove the old battery.

(3) Place a new CR2032 battery into the battery tray with correct polarity (+/-) as indicated.

(4) Insert the tray back into the slot.

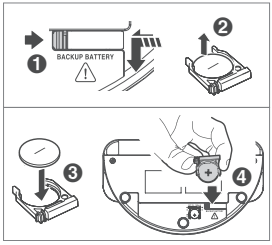

General Operation

Turn ON/OFF

When you first connect the unit to the mains socket, the unit will be in STANDBY mode.

- Press the ⏻ button to turn on.
- Press the ⏻ button again to turn off.

- Disconnect the mains plug from the mains socket if you want to switch the unit off completely.
- If there is no signal under the DOCK/LINE IN /Bluetooth modes, the unit will automatically switch off with in 15 minutes.

Select Modes

Press the button repeatedly to select **LINE IN** or **FM** or **Bluetooth** or **DOCK** mode.

Adjust the Brightness

In standby mode, press the **NAP/DIMMER** button to select brightness level.

Set the NAP Timer

- Press the **NAP/DIMMER** button repeatedly to select time (in minutes):

  90 → 60 → 30 → 15 → 00

- The system is now set to buzzer after the number of minutes you have set.

Set the Clock

In standby mode, The built-in clock shows the correct time in the display.

1. In standby mode, press and hold the **CLOCK** button to activate the clock setting mode, time indicator will blink.
2. Set the minute with the **TU+/▶▶I** button.
3. Set the hour with the **I◀◀/TU-** button.
4. Press the **CLOCK** button to confirm, the built-in clock starts operating and the seconds start counting from 0.

Tip:

During Time Setup, press the **► II/PAIR** button to select 12/24 hour format.

- **Time Display**

- During play, press the **CLOCK** button to show the current time on the display for a few seconds.

Set the alarm timer

You can set two alarms which wake up at different time. However the clock must be set correctly for the timer function to work.

1. In standby mode, press and hold the **AL1** or **AL2** button for several seconds, time indicator will blink.
2. Set the minute with the **TU+/▶▶I** button and set the hour with the **I◀◀/TU-** button.
3. Press the **VOL-/AL1** or **VOL+/AL2**, then press **I◀◀/▶▶I** buttons to select an alarm sound source: buzz, FM, iPod.
4. Press the **VOL-/AL1** or **VOL+/AL2** button, volume indicator will blink. Set the alarm volume with the **I◀◀/▶▶I** buttons.
5. Press the **VOL-/AL1** or **VOL+/AL2** button to confirm.

- **Activate and Deactivate the Alarm Timer**
  Press **VOL-/AL1** or **VOL+/AL2** repeatedly to activate or deactivate the timer.
- **Stop Alarm Ring**
  When the alarm rings, press the ⏻ button. The alarm stops but the alarm settings remain.

Note:

- For the SNOOZE function, when the alarm is activated, you could press any key except the ALARM or ON/OFF key to repeat the alarm.

Set the sleep timer

This unit can switch to standby automatically after a set period of time.

1 Press **MEM/SLEEP** button repeatedly to select a set period of time (in minutes):

90 ➟ 60 ➟ 30 ➟ 15 ➟ close up

- When the sleep timer is deactivated, "**Zz**" disappears on the display.

LINE IN Operation

1 Ensure that the unit is connected to the TV or audio device.
2 Press the button to switch **LINE IN** mode.
3 Operate your audio device directly for playback features.
4 Press the **VOL +/–** button to adjust the volume to your desired level.

iPod/iPhone Operation

You can enjoy audio from iPod/iPhone through this unit.

Listen to the iPod/iPhone

Note: This unit does not support apple 30-pin model.

1. Press the button to switch **DOCK** mode.
2. Place an iPod/iPhone into the dock.
3. Start to play the connected iPod/iPhone.

- To pause/resume play, press the ►❚❚ button.
- To skip to a track, press the **⏮/TU-** or **TU+/⏭** buttons.
- To search during play, press and hold **⏮/TU-** or **TU+/⏭** buttons, then release to resume normal play.

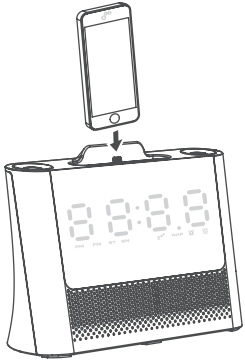

Charge the iPod/iPhone

The docked iPod/iPhone begins to charge while the unit is connected to AC power.

Bluetooth Operation

You can listen to music from a Bluetooth-enabled device via this player.

Pair Bluetooth-enabled Devices

The first time you connect your Bluetooth device to this player, you need to pair your device to this player.

Note:

- The operational range between this player and a Bluetooth device is approximately 8 meters.
- Before you connect a Bluetooth device to this unit, familiarize yourself with the Bluetooth capabilities of the device.
- Compatibility with all Bluetooth devices is not guaranteed.
- Any obstacle between this unit and a Bluetooth device can reduce the operational range.
- Keep this player away from any other electronic device that may cause interference.

1 Press the ⊡ button to select **BT** (Bluetooth) mode. "**NO BT**" will show on the display if the unit is not paired to any Bluetooth device, the system has entered pairing mode.

2 Activate your Bluetooth device and select the search mode.

3 "**CL02**" will appear on your Bluetooth device.

4 Select "**CL02**" and enter "0000" for password if necessary.

- If the pairing succeeds, display panel shows "**BT**" .

Tips:

- If a connection exist, press and hold press "**►❚❚/PAIR**" button on the unit for a few seconds to re-activate the pairing mode, the connection will be interrupted.
- If no other Bluetooth device pairs with this player within two minutes, the player will recover its previous connection.
- The player will also be disconnected when your device is moved beyond the operational range.
- If you want to reconnect your device to this player, place it within the operational range.
- If the device is moved beyond the operational range, when it is brought back, please check if the device is still connected to the player.
- If they are connected, display panel shows "BT".
- If the connection is lost, display panel shows "NO BT". Follow the instruction above to pair your device to the player again.

Listen to Music from Bluetooth Device

- If the connected Bluetooth device supports Advanced Audio Distribution Profile (A2DP), you can listen to the music stored on the device through the player.
- If the device also supports Audio Video Remote Control Profile (AVRCP) , you can use the player's buttons to play music stored on the device.

1. Pair your device with the player.
2. Start to play music via your device (if it supports A2DP).
3. Use the player's buttons to control play (if it supports AVRCP).

Listening to the FM Radio

Auto Scan and Save Preset Station

- Ensure that you have connected and fully extended the FM aerial.

1 Press the button to switch **FM** mode.

2 Press and hold the ►❚❚ button for few seconds to activate automatic programming. All available stations are programmed in the order of waveband reception strength.

- The first programed radio station is played automatically.

- **Tune to a Preset Radio Station**

- To select and listen to a saved radio station, press the ►❚❚ button to skip to the next preset radio station.

Tuning in a Station

- Press the **I◄◄/TU-** or **TU+/►►I** buttons repeatedly until you find the station you want.
- Press and hold the **I◄◄/TU-** or **TU+/►►I** buttons, the frequency changes down or up automatically until a station is found.

Presetting Stations Manually

- You can preset up to 20 FM stations.

1 Tune in the desired station, then press and hold the **MEM / SLEEP** button, the station will be stored and the screen will then show the preset number.

Note:

The unit will switch the Stereo or MONO channel to receive the FM radio mode automatically, it can get the best effect.

Troubleshooting

To keep the warranty valid, never try to repair the system yourself. If you encounter problems when using this unit, check the following points before requesting service.

No power

- Ensure that the AC cord of the apparatus is connected properly.
- Ensure that there is power at the AC outlet.
- Press ⏻ button to turn the unit on.

Poor radio reception

- Increase the distance between the unit and your TV or VCR.
- Fully extend the FM antenna.

Timer does not work

- Set the clock correctly.
- Switch on the timer.

Clock/timer setting erased

- Power has been interrupted or the power cord has been disconnected.
- Reset the clock/timer.

I can not find the Bluetooth name of this unit on my Bluetooth device

- Ensure the Bluetooth function is activated on your Bluetooth device.
- Re-pair the unit with your Bluetooth device.

Specifications

Output Power	1W x 2
Total Harmonic Distortion	1%(1kHz, 1W)
Frequency Response	250Hz - 14.5kHz
Tuning Range	87.5 - 108 MHz
Dimensions (W x D x H)	180 mm x 106 mm x 138 mm
Adapter Input	AC100-240V~ 50/60Hz, 0.5A MAX
Adapter Output	DC 5.0V ⎓ 2.0 A
Dock Output	5.0V ⎓ 1.0 A

Standard Accessories

Instruction Manual	x 1
Adapter	x1
3.5mm to 3.5mm audio cable	x 1

Features and specifications are subject to change without prior notice.

RSR® 中山市悦辰电子实业有限公司
Zhong Shan City Richsound Electronic Industrial Ltd

广东省中山市港口镇沙港东路群乐工业区
QunLe Industrial Area, East Shagang Road GangKou,
ZhongShan, GuangDong, China

Tel:+86-760-89923666
Fax:+86-760-89923669
http://www.richsound.com

User Manual of CR02 & 8037280

8037280

Allegro Bluetooth® Clock Radio

Owner's Manual

Contents

Important Safety Instructions **3**
Safety 3
Caution 3
Warning 3
Identifying the Parts **4**
Main Unit 4
Connections **5**
Connect to an external device 5
Set up the FM aerial 5
Connect Power 5
To Replace the BACKUP Battery 5
General Operation **6**
ON/OFF 6
Select Modes 6
Adjust the Brightness 6
Adjust Volume Levels 6
Volume Memory 6
Set the Time 6
Setting the Alarm Timer 6
Set the NAP Timer 7
Set the Sleep Timer 7
Bluetooth® Operation **7**
Pair Bluetooth®-enabled Devices 7
Playing from an External Audio Device **8**
Listening to the FM Radio **8**
Auto Scan and Save Preset Stations 8
Presetting Stations Manually 8
Tuning in a Station 9
Troubleshooting **10**
Specifications **10**
Standard Accessories **10**
Industry Canada Notice and Disclaimers **10**
Warranty **11**

Important Safety Instructions

WARNING

RISK OF ELECTRIC SHOCK DO NOT OPEN

WARNING: To reduce the risk of electric shock, do not remove cover (or back) as there are no user-serviceable parts inside. Refer servicing to qualified personnel.

This lightning flash with arrowhead symbol within an equilateral triangle is intended to alert the user to the presence of non-insulated "dangerous voltage" within the product's enclosure that may be of sufficient magnitude to constitute a risk of electric shock.

The exclamation point within an equilateral triangle is intended to alert the user to the presence of important operating and maintenance instructions in the literature accompanying the appliance.

SAFETY

1. Read these instructions – All the safety and operating instructions should be read before this product is operated.
2. Keep these instructions – The safety and operating instructions should be retained for future reference.
3. Heed all warnings – All warnings on the appliance and in the operating instructions should be adhered to.
4. Follow all instructions – All operating and use instructions should be followed.
5. Do not use this apparatus near water – The appliance should not be used near water or moisture – for example, in a wet basement or near a swimming pool, and the like.
6. Clean only with dry cloth.
7. Do not block any ventilation openings. Install in accordance with the manufacture's instructions.
8. Do not install near any heat sources such as radiators, heat registers, stoves, or other appartus (including amplifiers) that produce heat.
9. Do not defeat the safety purpose of the polarized or grounding plug. A polarized plug has two blades with one wider than the other. A grounding plug has two blades and a third grounding prong. The wide blade or the third prong is provided for your safety. If the provided plug does not fit into your outlet, consult an electrician for replacement of the obsolete outlet.
10. Protect the power cord from being walked on or pinched particularly at the plugs, convenience receptacles, and at the point where they exit from the apparatus.
11. Only use attachments/accessories specified by the manufacturer.
12. Use only with the cart, stand, tripod, bracket, or table specified by the manufacturer, or sold with the apparatus. When a cart or rack is used, use caution when moving the cart/apparatus combination to avoid injury from tip-over.

13. Unplug the apparatus during lightning storms or when unused for long periods of time.
14. Refer all servicing to qualified personnel. Servicing is required when the apparatus has been damaged in any way, such as power supply cord or plug is damaged, liquid has been spilled or objects have fallen into the apparatus has been exposed to rain or moisture, does not operate normally, or has been dropped.

CAUTION:

- Use of controls or adjustments or performance of procedures other than those described herein, may result in hazardous radiation exposure or other unsafe operation.
- To reduce the risk of fire or electric shock, do not expose this apparatus to rain or moisture. The apparatus must not be exposed to dripping or splashing and objects filled with liquids, such as vases, must not be placed on apparatus.
- The external adapter is used as the disconnect device, the disconnect device shall remain readily operable.

WARNING

- The battery (batteries or battery pack) must not be exposed to excessive heat such as sunshine, fire or the like.
- Before operating this system, check the voltage of this system to see if it is identical to the voltage of your local power supply.
- The ventilation should not be impeded by covering the ventilation openings with items such as newspaper, tablecloths, curtains, etc.
- Do not place this unit close to strong magnetic fields.
- Do not place the unit on a amplifier or receiver.
- Do not place this unit close to damp areas as the moisture will affect the life of the laser head.
- Should any solid object or liquid fall into the system, unplug the system and have it checked by qualified personnel before operating it any further.
- Do not attempt to clean the unit with chemical solvents as this might damage the finish. Use a clean, dry or slightly damp cloth.
- When removing the power plug from the wall outlet, always pull directly on the plug, never yank on the cord.
- No naked flame sources, such as lighted candles, should be placed on the apparatus.
- Changes or modifications to this unit not expressly approved by the party responsible for compliance will void the user's authority to operate the equipment.
- The marking label is pasted on the bottom of the equipment.

Identifying the Parts

Main Unit

Top View:

1. Buttons

- ⏻
  Turn ON or turn OFF the unit.
- ⇄
  Select a source.
- **MEM/SLEEP**
  Press and hold to preset stations manually.
  Set the sleep timer.
- **CLOCK**
  View the current source.
  Press and hold to set the time.
- **NAP**
  Set the NAP timer.

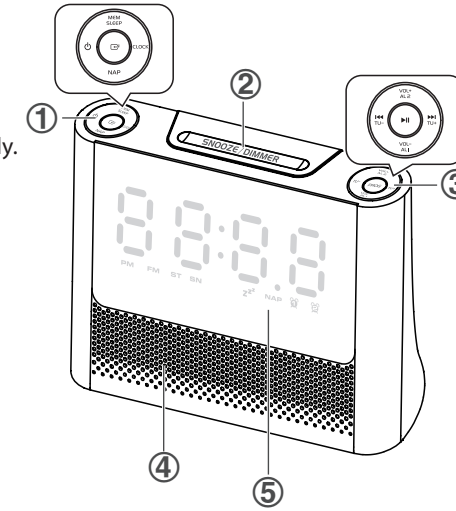

2. SNOOZE/DIMMER
Repeat the alarm.
Adjust brightness level.

3. Buttons

- ▶II
  In Bluetooth® mode, activate the pairing function and disconnect the existing paired Bluetooth® device.
  In FM mode, press and hold to preset stations automatically. Press this button to select the preset stations.
- **VOL-/AL1, VOL+/AL2**
  Decreases or increase the volume level.
  In Standby mode, press and hold the buttons to set alarm 1/2.
- **I◀◀/TU-, TU+/▶▶I**
  In Bluetooth® mode, skip to previous/next audio track.
  In FM mode, search radio stations manually.
  In the Clock Setting mode, press the buttons to set the clock.

4. Speakers

5. Display
Shows current status.

Rear View

1. DC IN 5V Jack
Connect to power cord.

2. USB Charging Port

3. LINE IN Jack
Connect to an external audio device using supplied 3.5mm audio cable.

4. FM Aerial

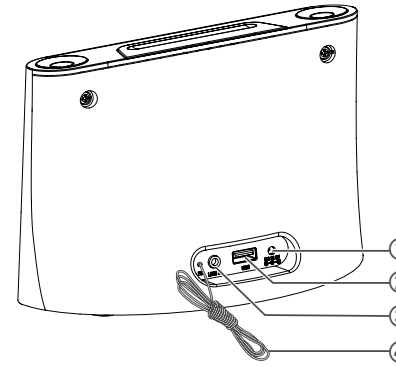

Connections

Connect to an external device

- Use the supplied 3.5mm to 3.5mm audio cable to connect the external audio device headphone plug to the **LINE IN** jack on the unit.

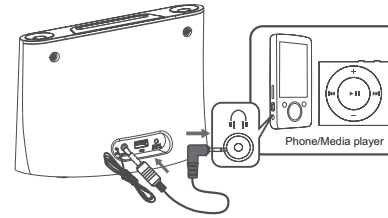

Set up the FM aerial

- Unwind the coiled FM aerial at the back of the unit.

  IMPORTANT: You may need to adjust the position of the FM aerial when tuning the radio to receive the strongest signal.

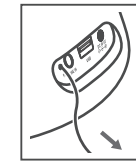

Connect Power

1. Plug in the detachable AC power cord into the DC IN jack at the back of the unit.
2. Plug the AC adapter into a wall outlet, ensuring rated voltage matches your local voltage.

Note:

- You need to connect the DC power to turn ON the unit. The battery is only for backup.
- If the timer does not work, the battery may be low, disconnect the DC power and replace with a new battery, then reconnect DC power and reset the clock.

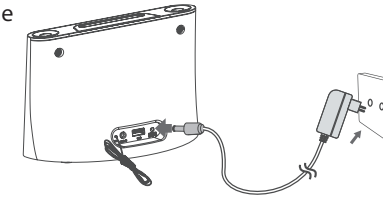

To Replace the BACKUP Battery:

1. Press down the flip on the left.
2. Pull out the battery tray and remove the old battery.
3. Place a new CR2032 battery into the battery tray with correct polarity (+/-) as indicated.

   (We recommend InfiniCell batteries for maximum performance).
4. Insert the tray back into the slot.

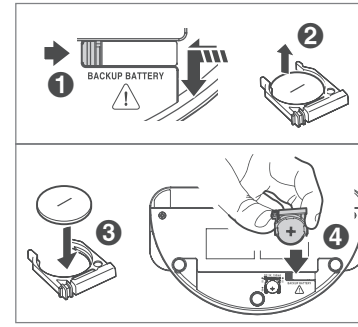

⚠ **NOTE:**

- Batteries are for backup purposes in the event of a power failure and should be installed prior to setting up the dock functions.
- If the power fails, or the unit is unplugged and there are no batteries in the backup, all setups in the unit will be lost.
- Should your settings be erased, you must reset all of them again as they cannot be restored.

⚠ **DO NOT INGEST BATTERY, CHEMICAL BURN HAZARD**

The unit supplied with this product contains a coin/button cell battery. If the coin/button cell battery is swallowed, it can cause sever internal burns in just 2 hours and lead to death. Keep new and used batteries away from children. If the battery compartment does not close securely, stop using the product and keep it away from children. If you think batteries might have been swallowed or placed inside any part of the body, seek medical attention immediately.

General Operation

ON/OFF

When you first connect the unit to the main jack, the unit will be in Standby mode.

- Press the ⏻ button to turn ON. Press again to turn OFF.
- Disconnect the main plug from the main jack if you want to switch the unit OFF completely.
- If there is no signal under the LINE IN and Bluetooth® mode, the unit will automatically switch OFF within 15 minutes.

Select Modes

Press the button repeatedly to switch between **LINE IN**, **FM**, and **BT** (Bluetooth®) mode. "LINE" or "bt " or "87.5 (FM and the radio frequency)" shows in the display.

Adjust the Brightness

Press the **SNOOZE/DIMMER** button to select brightness level.

Adjust Volume Levels

Press the **VOL +/–** buttons to adjust the volume level.

Volume Memory

- If the last used volume is over level 5, the last used volume will be stored automatically as default volume.
- If the last used volume is lower than 5, the default volume will be set to level 5.

Set the Time

The display will show the correct time after setting the clock.

1. In Standby mode, press and hold the **CLOCK** button. The clock indicator will blink.
2. Press the ⏮/**TU-** buttons to adjust the hour digits while blinking, then press the **TU+/**⏭ buttons to adjust the minute digits while blinking. Press the **CLOCK** button to confirm.

- In the Clock Setting mode, press the ⏯ button to switch between 12 or 24 hour format.

- **View the Source**

- During play, press the **CLOCK** button to show the current source on the display for a few seconds.

Setting the Alarm Timer

You can set 2 separate alarm modes to go off at different times.

1. Ensure that the clock is set correctly.
2. In Standby mode, press and hold the **AL1** or **AL2** button for several seconds, time indicator will blink.
3. Set the hour with the ⏮/**TU-** button and set the minute with the **TU+/**⏭ button. Then press the **AL1** or **AL2** to confirm.
4. Press the ⏮/**TU-, TU+/**⏭ buttons to select an alarm sound source: buzzer (buzz), tuner (tUnr) . Then press the **AL1** or **AL2** to confirm, volume indicator will blink.
5. Set the alarm volume with the ⏮/**TU-, TU+/**⏭ buttons. Then press the **AL1** or **AL2** button to confirm.

- **Activate and Deactivate the Alarm**

  In Standby mode, press **AL1** or **AL2** repeatedly to activate or deactivate the timer. If the alarm is activated, " " or " " icon is displayed.

- **Repeat Alarm**

  When the alarm rings, press the **SNOOZE/DIMMER** button. "SN 9" shows in the display. The alarm will ring again 9 minutes later.

- **Stop Alarm Ring**

  When the alarm rings, press the ⏻ button. The alarm stops but the alarm settings remain.

Set the NAP Timer

- Press the **NAP** button repeatedly to select time (in minutes):

  05 → 10 → 15 → 20 → 30 → 45 → 60 → 90 → close up

- The system is now set to buzzer after the number of minutes selected.
- When the NAP timer is activated, "**NAP**" icon is displayed.
- When the NAP timer rings, press the ⏻ or ⇄ button. The NAP timer stops.

Set the sleep timer

This unit can switch to standby automatically after a set period of time.

1 Press **MEM/SLEEP** button repeatedly to select a set period of time (in minutes):

  90 → 60 → 30 → 15 → close up

- When the sleep timer is activated, " zzz " icon is displayed.

Bluetooth® Operation

You can listen to music from a Bluetooth®-enabled device via this unit.

Note:

- The operational range between this unit and a Bluetooth® device is approximately 8 metres (26 ft).
- Before you connect a Bluetooth® device to this unit, familiarize yourself with the Bluetooth® capabilities of the device.
- Compatibility with all Bluetooth® devices is not guaranteed.
- Any obstacle between this unit and a Bluetooth® device can reduce the operational range.
- Keep this player away from any other electronic devices that may cause interference.
- If the signal strength is weak, your Bluetooth® receiver may disconnect, but it will re-enter Pairing mode automatically.

Pair Bluetooth®-enabled Devices

1. Press the ⇄ button to select bt (Bluetooth®) mode. "No bt" will show on the display if the unit is not paired to any Bluetooth® device.
2. The system has entered Pairing mode.
- Or press and hold the ▶II button to be searchable. The display will show "PAIr".
3. Activate your Bluetooth® device and select the Search mode. **"inStudio 8037280"** will appear on your Bluetooth® device.
4. Select **"inStudio 8037280"** in the pairing list. The display panel shows "bt" when the pairing process is successful.
5. Start to play music from the connected device.
- To disconnect the Bluetooth® function, switch to another function on the unit or disable the function from your Bluetooth® device. Or press and hold the ▶II button, the Bluetooth® device will be disconnected from the unit. The display panel shows "No bt".

- To pause/resume play, press the ▶II button.
- To skip to a track, press the I◀◀/**TU-**,**TU+**/▶▶I buttons.

Tips:
- Enter "0000" for the password if necessary.
- If a connection exists, press and hold the ▶II button to re-activate the Pairing mode, the connection will be interrupted. The display will show "PAIr".
- If no other Bluetooth® device pairs with this player within 2 minutes, the player will recover its previous connection.
- The player will also be disconnected when your device is moved beyond the operational range.
- If you want to reconnect your device to this player, place it within the operational range.
- If the device is moved beyond the operational range, when it is brought back, please check if the device is still connected to the player.
- If they are connected, display panel shows "bt".
- If the connection is lost, display panel shows "No bt". Follow the instruction above to pair your device to the player again.

Playing from an External Audio Device

You can listen to an external audio device through this unit.
1. Ensure that the unit is connected to the audio device.
2. Press the button to switch **LINE IN** mode. "LINE" icon is displayed.
3. Operate your audio device directly for playback features.
4. Press the **VOL +/–** buttons to adjust the volume to your desired level.

Listening to the FM Radio

Auto Scan and Save Preset Stations
- Ensure that you have fully extended the FM aerial.
1. Press the button to switch **FM** mode.
2. Press and hold the ▶II button for few seconds to activate automatic programming. "AUto" shows in the display. Then all available stations are programmed in the order of waveband reception strength.
- The first programed radio station is played automatically.

Presetting Stations Manually
- You can preset up to 20 FM stations.
1. Tune in the desired station, then press and hold the **MEM / SLEEP** button, the station will be stored and the screen will then show the preset number.

- **Tune to a Preset Radio Station**
- To select and listen to a saved radio station, press the ▶II button to skip to the next preset radio station.

Tuning in a Station

- Press the ⏮/**TU-** or **TU+/**⏭ buttons repeatedly until you find the station you want.
- Press and hold the ⏮/**TU-** or **TU+/**⏭ buttons, the frequency changes down or up automatically until a station is found.

Note:

The unit will switch between the Stereo or MONO channel to receive the FM radio mode automatically, to receive the best signal. "ST" will show on the display if the Stereo channel is selected.

Troubleshooting

To keep the warranty valid, never try to repair the system yourself. If you encounter problems when using this unit, check the following tips before requesting service.

No power

- Ensure that the DC cord of the unit is connected properly.
- Ensure that there is power at the DC outlet.
- Press ⏻ button to turn the unit ON.

Poor radio reception

- Increase the distance between the unit and your TV or VCR.
- Fully extend the FM antenna.

Timer does not work

- Set the clock correctly.
- Switch on the timer.

Clock/timer setting erased

- Power has been interrupted or the power cord has been disconnected.
- Reset the clock/timer.

I can't find the Bluetooth® name of this unit on my Bluetooth® device

- Ensure the Bluetooth® function is activated on your Bluetooth® device.
- Re-pair the unit with your Bluetooth® device.

Specifications

Bluetooth® range	8m (26ft)
Adapter Input	AC 100-240V~ 50/60Hz, 0.5A MAX
Adapter Output	DC 5.0V, 2.0 A
USB Charging	5.0V ⎓ 1.0 A
Output Power	2W x 2
Frequency Response	120Hz - 20kHz
Tuning Range	87.5-108 MHz
Audio input sensitivity	500mV
Impedance	4Ω x 2
Dimensions (W x D x H)	180 mm x 106 mm x 138 mm

Standard Accessories

Instruction Manual ..... x 1
Adapter.. ..... x1
3.5mm to 3.5mm audio cable ..... x 1

Features and specifications are subject to change without prior notice.

FCC Statement

This device complies with Part 15 of the FCC Rules. Operation is subject to the following two conditions:

(1) this device may not cause harmful interference, and

(2) this device must accept any interference received, including interference that may cause undesired operation.

- "Warning: Changes or modifications to this unit not expressly apporved by the party responsible for compliance could void the user's authority to operate the equipment."

- "NOTE: This equipment has been tested and found to comply with the limits for a Class B digital device, pursuant to Part 15 of the FCC Rules. These limits are designed to provide reasonable protection against harmful interference in a residential installation. This equipment generates, uses and can radiate radio frequency energy and, if not installed and used in accordance with the instructions, may cause harmful interference to radio communications. However, there is no guarantee that interference will not occur ina particular installation. If this equipment does cause harmful interference to radio or television reception, which can be determined by turning the equipment off and on, the user is encouraged to try to correct the interference by one or more of the following measures:

– Reorient or relocate the receiving antenna.

- Increase the separation between the equipment and receiver.

- Connect the equipment into an outlet on a circuit different from that to which the receiver is connected. Consult the dealer or an experienced radio/TV technician for help."

FCC ID: Z8M-CR02

Industry Canada Notice RSS247

This device complies with Industry Canada license-exempt RSS standard(s).

Operation is subject to the following two conditions:

(1) this device may not cause interference, and

(2) this device must accept any interference, including interference that may cause undesired operation of the device.

This digital apparatus does not exceed the Class B limits for radio noise emissions from digital apparatus set out in the Radio Interference Regulations of Industry Canada.

IC: 255A-8037280
CAN ICES-3(B)/NMB-3(B)

Bluetooth®

The Bluetooth® word mark and logos are registered trademarks owned by Bluetooth® SIG, Inc. and any use of such marks by The Source (Bell) Electronics Inc. is under license. Other trademarks and trade names are those of their respective owners.

THE SOURCE – WARRANTY

The Source warrants that this product will be free from defects in materials and workmanship for a period of twelve (12) months from the date of purchase. Within this period, simply take the product and your proof of purchase to any The Source store or participating dealer and the product will be replaced (where available) without charge. Any product which has been subject to misuse or accidental damage is excluded from this warranty.

This warranty is only applicable to a product purchased through The Source company-owned stores or participating dealers in Canada where the warranty is included with the product. While this warranty does not confer any legal rights other than those set out above, you may have additional statutory rights which will vary under the laws of the various countries, states, provinces and other governmental entities in which The Source operates. This warranty is subject to all statutory rights you may have in Canada.

Imported by:
The Source,
Barrie, Ontario, Canada, L4M 4W5

Manufactured in China

For product support please visit
www.in-studio.ca

Please
Recycle

© 2015 The Source
All rights reserved.