$5.75

MAGNETIC TAPE SYSTEMS
REFERENCE DOCUMENTS
FOR ALL "A" AND "P" SYSTEMS

SDS 901040B

April 1967

This publication supersedes SDS 901040A-1
dated August 1965, revised February 1966.

SDS
SCIENTIFIC DATA SYSTEMS • 1649 Seventeenth Street • Santa Monica, Calif. • (213) 871-0960

©1965, 66, 67, Scientific Data Systems, Inc.

INTRODUCTION

This is an updating packet for all Ampex and Potter Magnetic Tape Systems shipped.

It is to be integrated into and used in conjunction with the following documents:

1. Logic Diagrams, Magnetic Tape Control unit SDS 103257 D
2. Logic Diagrams, Magnetic Tape Unit SDS 103258 D

These two documents have been supplied as BINDER II of the respective Magnetic Tape Technical Manuals.

The "E" revision pages and Addendum sheets supplied in this package reflect the configurations of all magnetic tape systems presently in the field.

History logic configurations can be determined by the Addendum pages with the corresponding schematics affected. These Addendum pages are for reference only and are not to be used for reworking. The respective Engineering Change Order numbers are referenced to the changes.

Subsequent updating packets will be supplied to be collated by the user.

MASTER INDEX
(SDS 901040)

TITLE	SDS NUMBER
LOGIC DIAGRAMS, MAGNETIC TAPE CONTROL UNIT	103257E
LOGIC DIAGRAMS, MAGNETIC TAPE UNIT	103258E
POWER DISTRIBUTION, SCHEMATIC	102334B
ZK51 TERMINATION MODULE	101714
ZK56 TERMINATION MODULE	103015
ZK57 TERMINATION MODULE, SCHEMATIC	103470
ZK58 TERMINATION MODULE, SCHEMATIC	103473
ZK58 MATERIAL LIST	103474
ZK67, ZK68 TERMINATION MODULES	114062
ILLUSTRATED PARTS CATALOG, SEE MODULE DATA SHEETS (SDS 900623 AND SDS 980034) TM-4 MANUAL AND MT-120 MANUAL	
SUPPLIERS CODE INDEX	900036

REVISIONS				103257 D
REV	DESCRIPTION	CHG	DATE	APPROVED
A	RELEASED TO MFG.			
D	SEE REV E.O.			

NOTES UNLESS OTHERWISE SPECIFIED

[2] RECEPTACLE J(24V) IS PROVIDED FOR P43 FROM A MODEL 9246 MAG TAPE UNIT.

[1] RECEPTACLE J(25V) IS PROVIDED FOR THE P41 TO P40 CABLE. P40 IS CONNECTED TO J(11G) OF THE MODEL 910 OR 920 COMPUTER, OR J(38X) OF THE MODEL 9120 Y BUFFER, OR TO J(1H) OR J(6H) OF THE MODEL 9126 SIGNAL COUPLER.

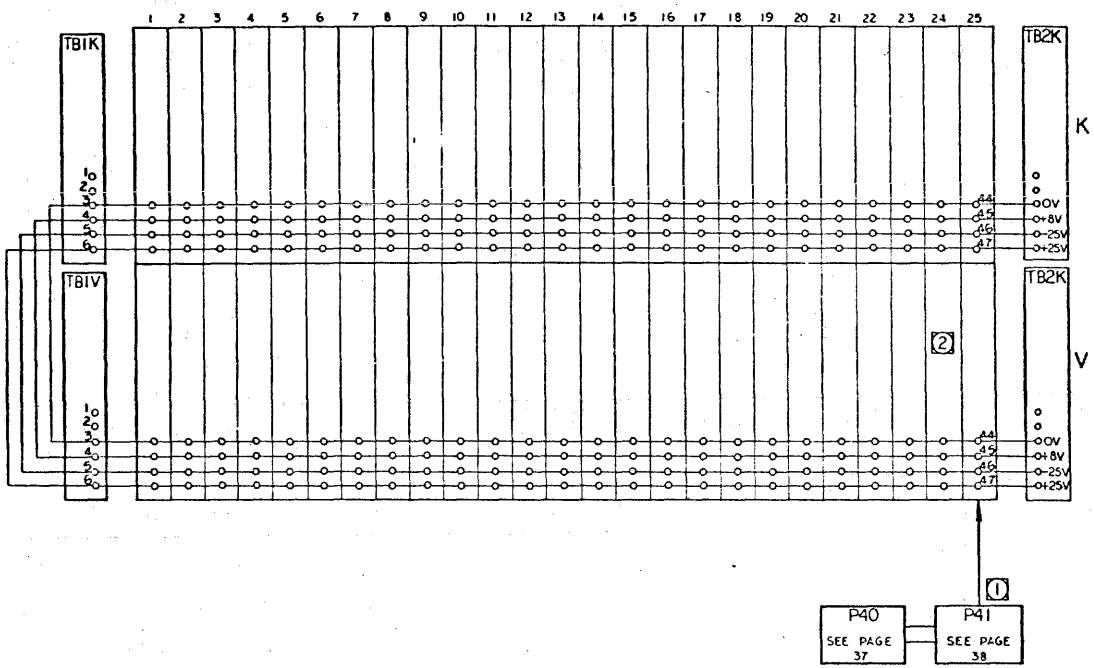

92483,9348,9248,92481,92482.
MAG TAPE CONTROL UNIT
PAGE 2
D

NO REQ	DRAWING NO.	DESCRIPTION	REFERENCE DESIGNATION	ITEM NO.

MATERIAL LIST

NOTES UNLESS SPECIFIED

DRAWN	Jack	7/13/62
CHECK	[illegible]	7/16/63
APPR.	[illegible]	7/19/63

SDS

TITLE: DIAGRAM, LOGIC, MAG TAPE CONTROL UNIT

MODEL NO: 9248

NEXT ASSY: 101872

SIZE: D DWG NO: 103257 D

SCALE: DO NOT SCALE DRAWING SHEET

103257 D

9348 TAPE CONTROL UNIT DIRECTORY

Item	Page
Ae	27
Bor	27
Cf	31
Cfb	5, 6, 7
Cgp	5, 6, 7
Cgs	5, 6, 7
Cr	6
Cr + Co	6
Cr + W9 W11 Me	6
Cri	21
Cri + Mstart	20
Cs	27
C5	20
C12	20
CT2	20
(CT2)	30
CT2 C13 C15 C16	20
(CT2)	30
C14	20
CT3	20
(CT3)	30
(CT3)	30
(CT3)	30
CT7 C10	20
CT7 C10	20
(CT7)	35
(CT7)	35
(CT7)	35
Da	24
Da	23
Db	24
Db	23
Dc	24
Dc	23
Dc	13
Dc	13
D1	11
D1	25
D1 D2 L1 Dc	31
D1 D2 L1 D5	31
D2	11
D2	25
D3	17
D3	25
D4	12
D4	25
D5	12
D5	30
D6	12
(Ecm)	32
Fb	4
Gap	4
(Gap + W9 W10 W11 R2m)	21
(In)	36
(In)	36
(Ip)	35
Ir	28
(Ir)	31
Mc	22
(MC)	36
Mca	4
(Mca)	34
Mcb	4
Mcc	4
Mcd	4
Mcontrol	30
(Mcontrol)	34
(Mcr)	29
Mcr	28
Ma	10
Mf	10
(Mf)	34
Mf D2	11
Mf + Mr	27

Item	Page
Mgl	13
Ml	30
Mgb	21
Mp	14
(Mp)	33
Mr	10
(Mr)	34
(Mr)	32
(Mr)	32
Mstart	25
(Mstart)	32
Mstart	25
Mstart D2	8
Mstart D3	30
(Mstart D3)	34
Mtg	10
(Mtg)	36
(Mtr)	32
M1	14
(M1)	33
M2	14
(M2)	33
M3	15
(M3)	33
M4	15
(M4)	33
M5	16
(M5)	33
M6	15
(M6)	33
O2	31
R1	21
R1	27
R2	21
R2	27
R3	21
R3	27
R4	21
R4	27
R5	21
R5	27
R6	21
R6	27
R1a	26
R2a	26
R3a	26
R4a	26
R5a	26
R6a	26
R7a	26
R1b	16
R2b	16
R3b	17
R4b	17
R5b	17
R6b	17
R1m	18
R2m	18
R3m	18
R4m	18
R5m	18
R6m	18
R1w	24
[R1w]	19
(R1w)	20
(R2w)	20
R3w	26
[R3w]	19
(R3w)	20
(R4w)	20
R4d	16
R5d	9
R6d	9
R4m	18
R7b	13
R7d	9
R7m	21
Rl	29
Rpd	21
Rp	21
Rp	27
Rpb	16

Item	Page
Rpm	18
Rpw	20
[Rpw]	19
(Rpw)	20
Rss	9
Rsb	20
Rsd	34
Rsm	20
Rsw	33
[Rsw]	19
(Rsw)	20
(Rsw)	20
Rlo	28
[Rlo]	30
(Rlo)	36
Rlm	26
Wos	28
(Wos)	36
(Wbs)	36
[Wbs]	31
Wbs	27
(Wbs)	32
W0	25
W0	24
W0 Rlm	28
[W0 W9 W11 D1 D2 D5 Dc]	31
W0 W3 W5 W9 W11	11
W0 W3 W5 W9 W11	11
W3	28
W3	28
(W3 W9 W11 Rsd + W9 W11 Me Rsd)	6
W6	25
W5	24
W9	25
W9	26
W9 W11	29
W9 W11*	24
W9 W11**	24
W9 W11	24
(W9 W11)	32
W9 W11	29
W9 W11*	25
W9 W11**	26
(W9 W11)	32
W10	25
W10	24
W11	24
W11	26
W11 D1 D2 D3 D4 Rbb + D5	31
W11 Mstart	28
Zp	23
Zp	21

9348, 92483, 9248, 92481, 92482
MAG TAPE CONTROL UNIT
PAGE 3
D

REV	DESCRIPTION	DATE
A	REL TO FG	
D	SEE REV E.O.	

REVISIONS

DRAWING NO. | DESCRIPTION | MATERIAL LIST | REFERENCE DESIGNATION

DRAWN		
CHECK		
APPR.		

SDS

TITLE DIAGRAM, LOGIC, MAG TAPE CONTROL UNIT

SIZE D | DWG NO. 103257 | D

SCALE | CO-ORD'T | SHEET

MODEL NO. 9248

NEXT ASSY

REVISIONS				103257 D
REV	DESCRIPTION	CHK	DATE	APPROVED
A	REL. TO MFG.			
B	SEE REV E.O.			
D	SEE REV E.O.			

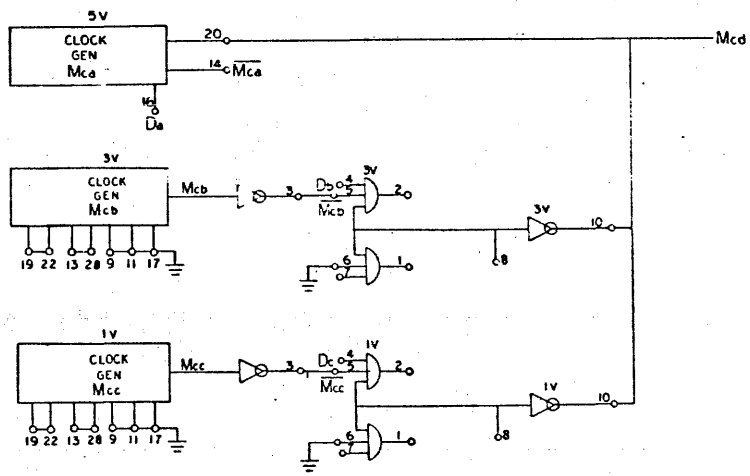

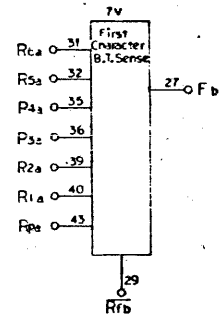

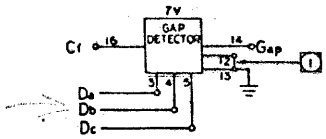

1 REMOVE JUMPER FOR MODEL 92483.

MODEL	FREQUENCY/PERIOD µs			GAP DETECTOR SETTING IN µs		
	POSITION 5V Mca	POSITION 3V Mcb	POSITION 1V Mcc	Da	Db	Dc
9248	15KC 67µs	41.7 KC 24µs	NOT USED	150	54	NOT USED
92481	15KC 67µs	NOT USED	NOT USED	150	NOT USED	NOT USED
92482	15KC 67µs	41.7 KC 24µs	60KC 16.7µs	150	54	37
92483	24KC 41.6µs	66.72KC 15µs	96KC 10.4µs	95	34	23
9346	12KC 83.2µs	33.36KC 30µs	48KC 20.8µs	185	67	46

9348,
92483,9248,92481,92482
TAPE CONTROL
PAGE 4
D

DWG SIZE	DRAWING NO.	DESCRIPTION	REFERENCE DESIGNATION	SYSTEM NO.
		MATERIAL LIST		

NOTES UNLESS SPECIFIED

DRAWN
CHECK
APPR

SDS SCIENTIFIC DATA SYSTEMS

TITLE
DIAGRAM, LOGIC,
MAG TAPE CONTROL UNIT

MODEL NO. 9248

NEXT ASSY

SIZE D DWG NO. 103257 D

SCALE DO NOT SCALE DRAWING SHEET

103257 D

REV	DESCRIPTION	LTR	DATE	APPROVED
A	REL TO MFG.			
D	SEE REV E.O.			

103257 D

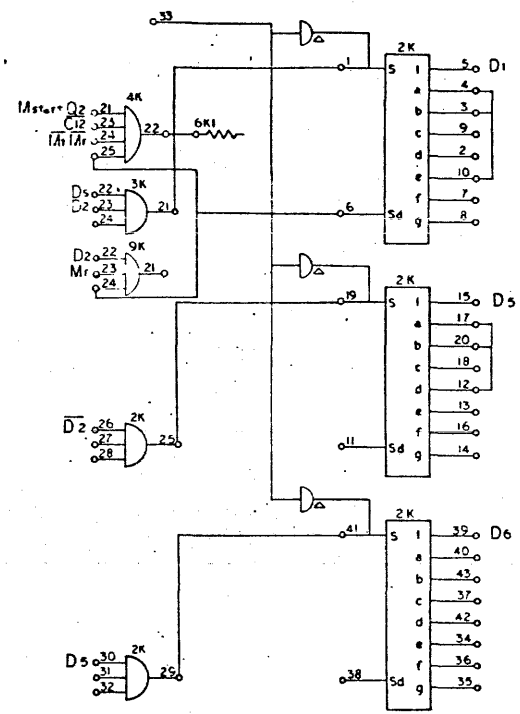

MODEL	D1	D5	D6
9248	4.7ms	350us	10us
92481	4.7ms	350us	
92482	4.7ms	350us	
92483	3.8ms	250us	
9348	6 ms	425us	10us

9348,
92483,9248,92481,92482
TAPE CONTROL
PAGE 12
D

NO REQ	DRAWING NO	DESCRIPTION	REFERENCE DESIGNATION	ITEM NO

MATERIAL LIST

NOTED UNLESS SPECIFIED

DRAWN
CHECK
APPR

SDS

TITLE
DIAGRAM, LOGIC,
MAG TAPE CONTROL UNIT

MODEL NO 9248

NEXT ASSY

SIZE D DWG NO 103257 D

SCALE DO NOT SCALE DRAWING SHEET

103257 D

REV	DESCRIPTION	CHG	DATE	APPROVED
A	REL. TO MFG.			
D	SEE REV E.O.			

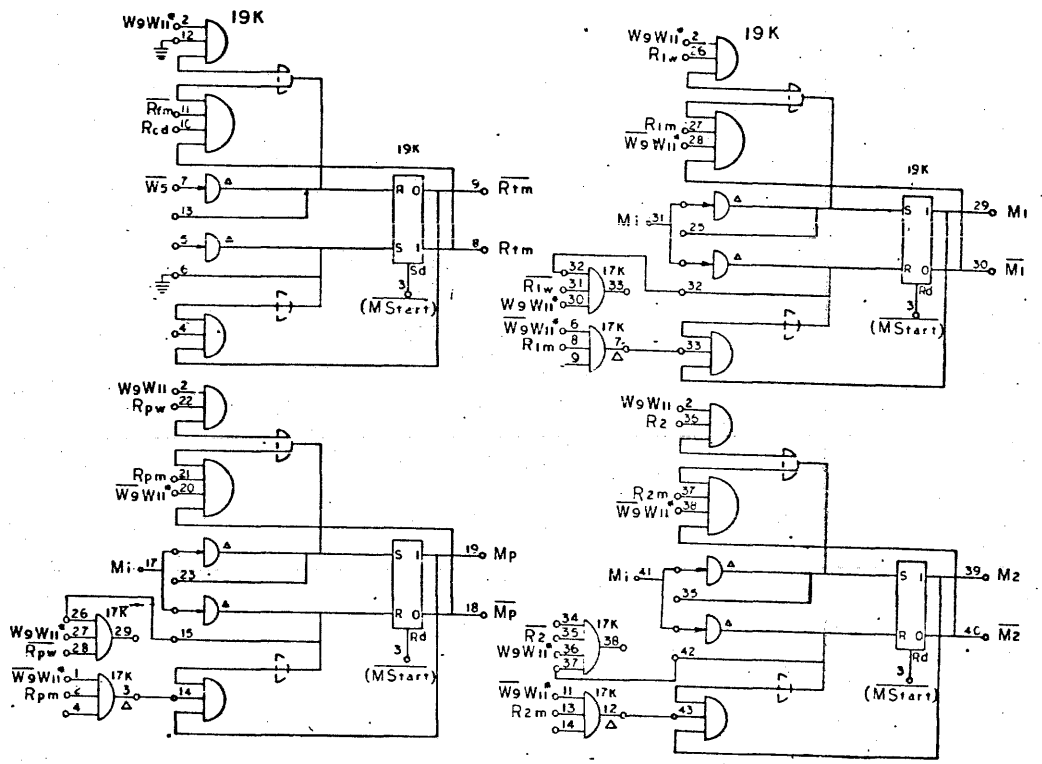

9348
92483,9248,92481,92482
TAPE CONTROL
PAGE 14
D

NO REQ	DRAWING NO	DESCRIPTION	REFERENCE DESIGNATION	REV NO
		MATERIAL LIST		

NOTES UNLESS SPECIFIED

DRAWN		7/1/65
CHECK		
APPD		7/8/65

SDS

TITLE
DIAGRAM, LOGIC,
MAG TAPE CONTROL UNIT

MODEL NO 9248

NEXT ASSY

SIZE	DWG NO	
D	103257	D

SCALE | DO NOT SCALE DRAWING | SHEET

103257 D

REV	DESCRIPTION	CHK	DATE	APPROVED
A	SEL TO MFG			
D	SEE REV E.O.			

103257 D

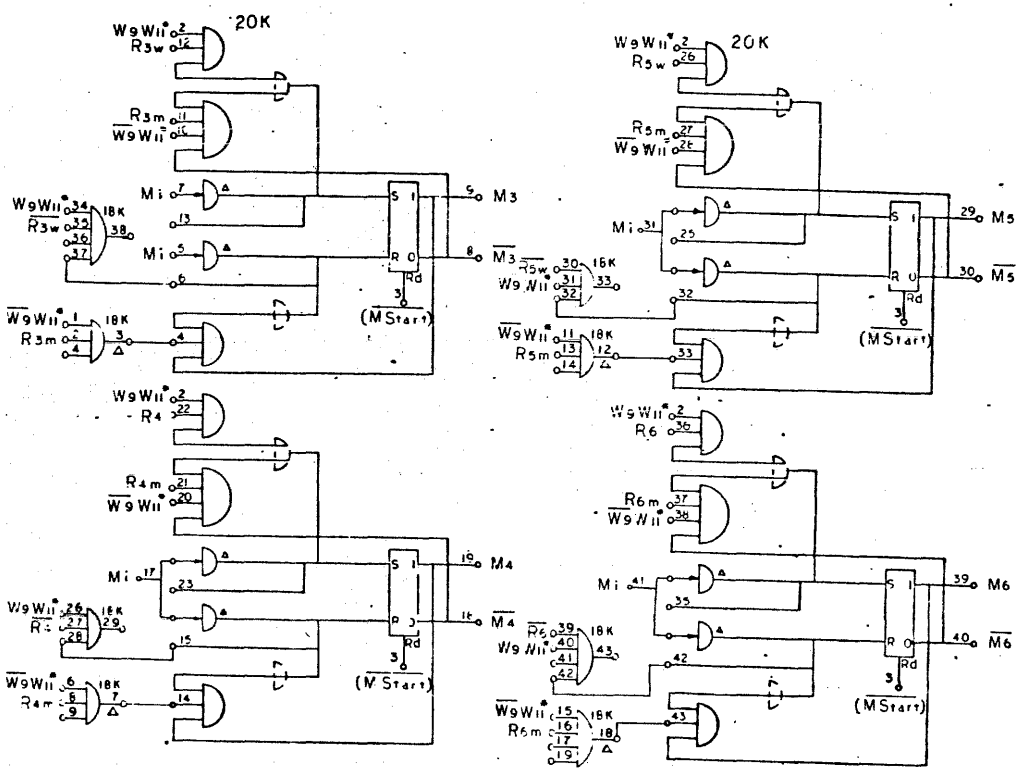

9348
92483,92218,92481,92482
TAPE CONTROL
PAGE 15
D

NO REQ	DRAWING NO	DESCRIPTION	REFERENCE DESIGNATION	OPTIONS USED

MATERIAL LIST

NOTES UNLESS SPECIFIED

DRAWN		
CHECK		
APPD		

SDS SCANTRON DATA SYSTEMS

TITLE
DIAGRAM, LOGIC,
MAG TAPE CONTROL UNIT

MODEL NO 9248

NEXT ASSY

SIZE D DWG NO 103257 D

SCALE

REVISION OF NEXT DRAWING

SHEET

103257 101

REV	DESCRIPTION	DATE	APPROVED
A	REL TO MFG		
D	SEE REV E.O.		

103257 D

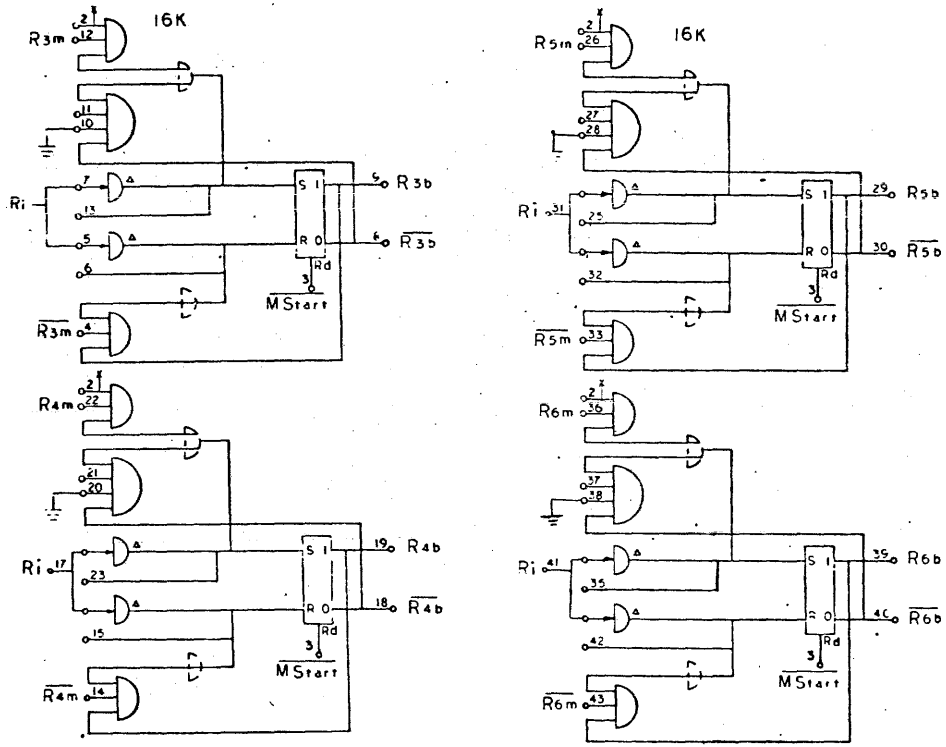

9348.
92483,9248,92481,92482
TAPE CONTROL
PAGE 17
D

NO REQ	DRAWING NO	DESCRIPTION	REFERENCE DESIGNATION	FIND NO

MATERIAL LIST

NOTES UNLESS SPECIFIED

DRAWN
CHECK
APPR

SDS SCIENTIFIC DATA SYSTEMS

TITLE
DIAGRAM, LOGIC,
MAG TAPE CONTROL UNIT

MODEL NO 9248

NEXT ASSY

SIZE D DWG NO 103257 D

SCALE DO NOT SCALE DRAWING SHEET

103257 D

REV	DESCRIPTION	BY	DATE	APPROVED
A	REL TO MFG			
D	SEE REV ED.			

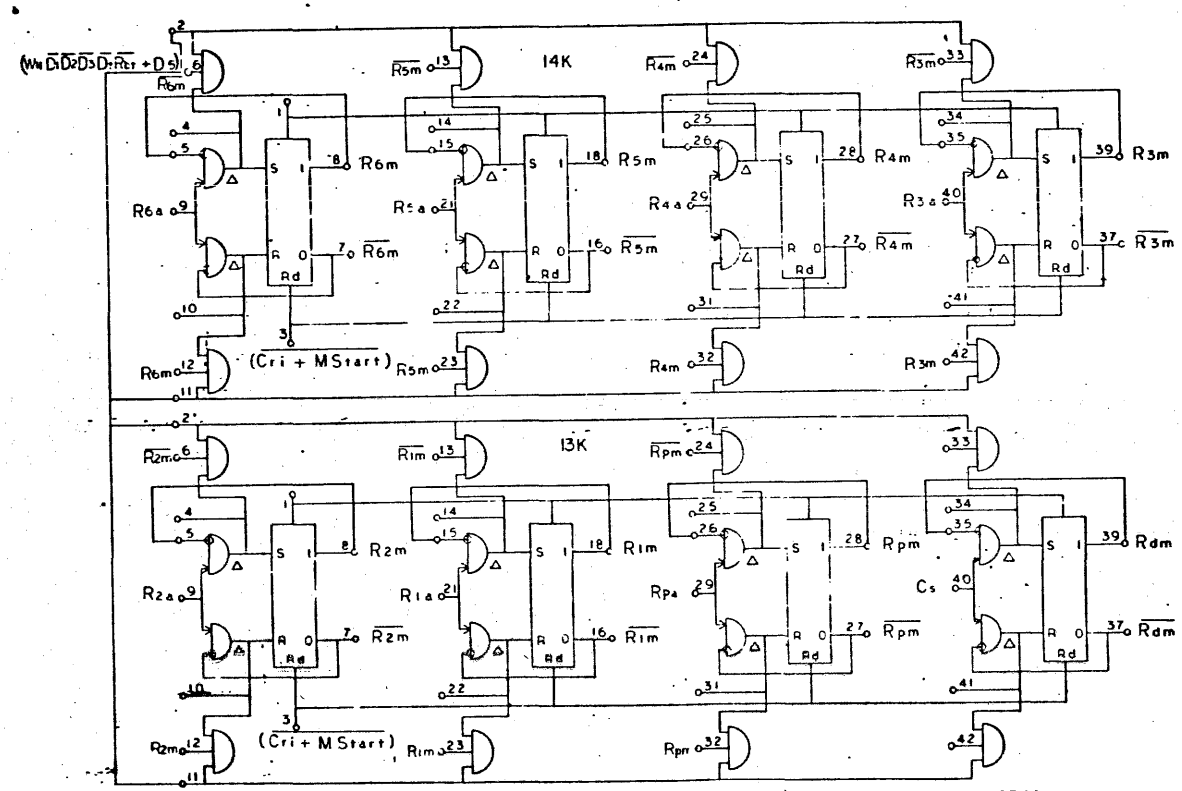

9348,
92483,9248,92481,92482
TAPE CONTROL
PAGE 18
D

NO REQ	DRAWING NO	DESCRIPTION	REFERENCE DESIGNATION	ITEM NO

MATERIAL LIST

NOTES UNLESS SPECIFIED

DRAWN / CHECK / APPR

SDS

TITLE: DIAGRAM, LOGIC, MAG TAPE CONTROL UNIT

MODEL NO 9248

NEXT ASSY

SIZE D | DWG NO 103257 | D

SCALE | DO NOT SCALE DRAWING | SHEET

103257 D

REV	DESCRIPTION	CHK	DATE	APPROVED
A	REL. TO MFG.			
D	SEE REVED.			

103257 D

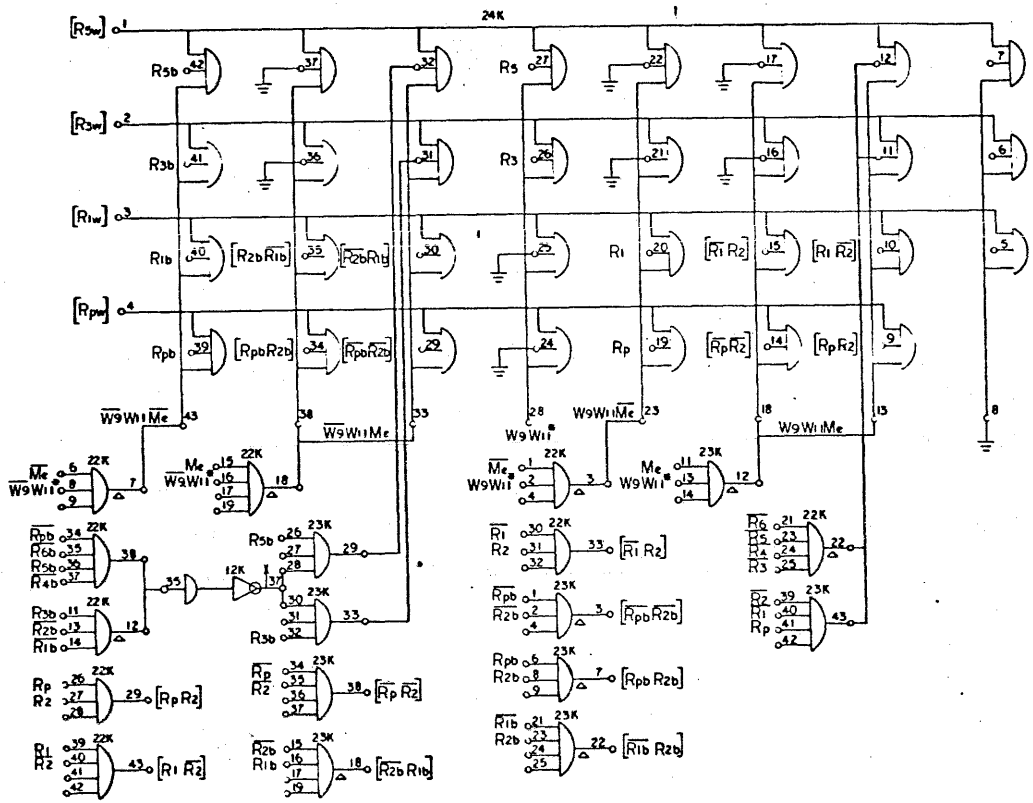

9348
92483,9248,92481,92482
TAPE CONTROL
PAGE 19
D

NO REQ	DRAWING NO.	DESCRIPTION	REFERENCE DESIGNATION	STOCK NO.
	MATERIAL LIST			

NOTES UNLESS SPECIFIED

1. TOLERANCES
2. BREAK ALL SHARP EDGES AND CORNERS
3. REMOVE BURRS
4. ALL DIM. IN INCHES

DRAWN
CHECK
APPR.

SDS

TITLE
DIAGRAM, LOGIC,
MAG TAPE CONTROL UNIT

MODEL NO. 9248

NEXT ASSY

SIZE D DWG NO. 103257 D

SCALE DO NOT SCALE DRAWING SHEET

103257 D

REV	DESCRIPTION	CHK	DATE	APPROVED
A	REL. TO MFG			
D	SEE REV E.O.			

103257 D

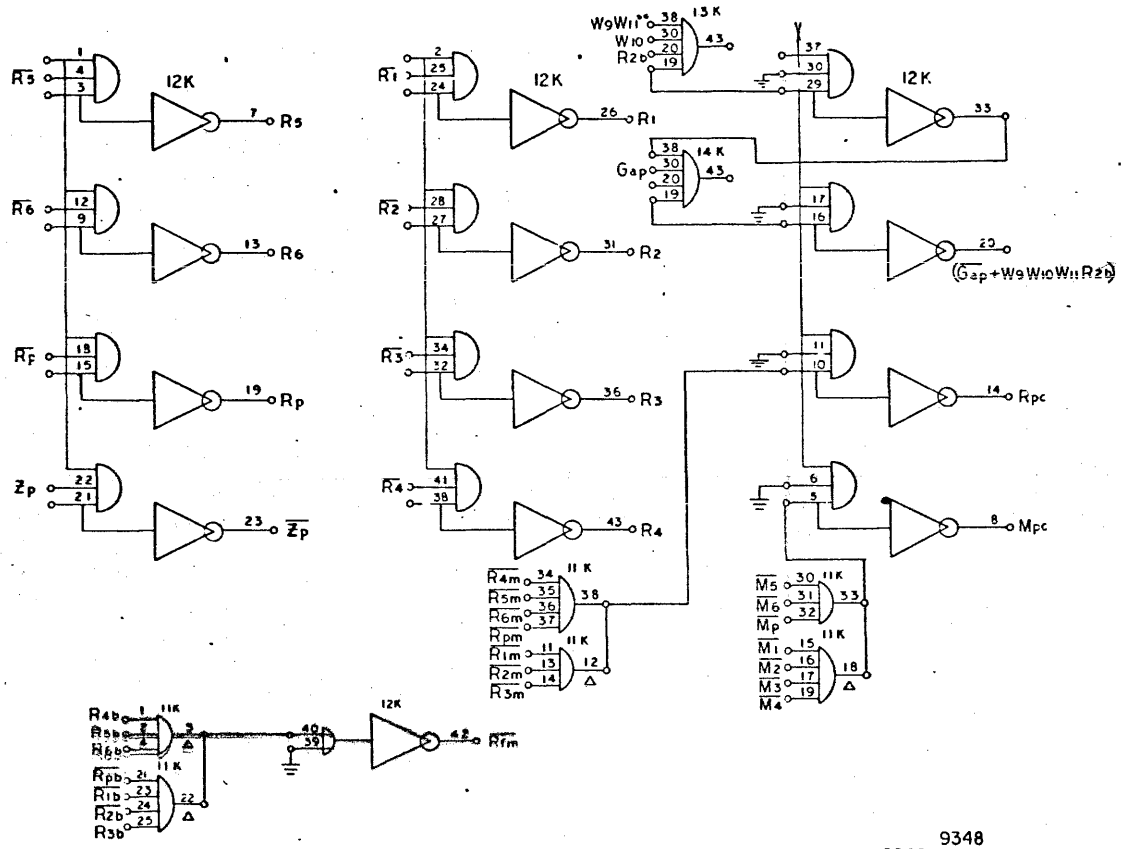

9348
92483,9246,92481,92482
TAPE CONTROL
PAGE 21
D

NO REQ	DRAWING NO	DESCRIPTION	REFERENCE DESIGNATION	ITEM NO

MATERIAL LIST

NOTES UNLESS SPECIFIED

DRAWN 7-3-63
CHECK
APPR 7-3-63

SDS

TITLE
DIAGRAM, LOGIC,
MAG TAPE CONTROL UNIT

MODEL NO 9248

SIZE D | DWG NO 103257 | D

SCALE | DO NOT SCALE DRAWING | SHEET

103257 D

REVISIONS				103257 E
REV	DESCRIPTION	CHK	DATE	APPROVED
A	REL TO MFG			
D	SEE REV EO			
E	SEE REV EO			

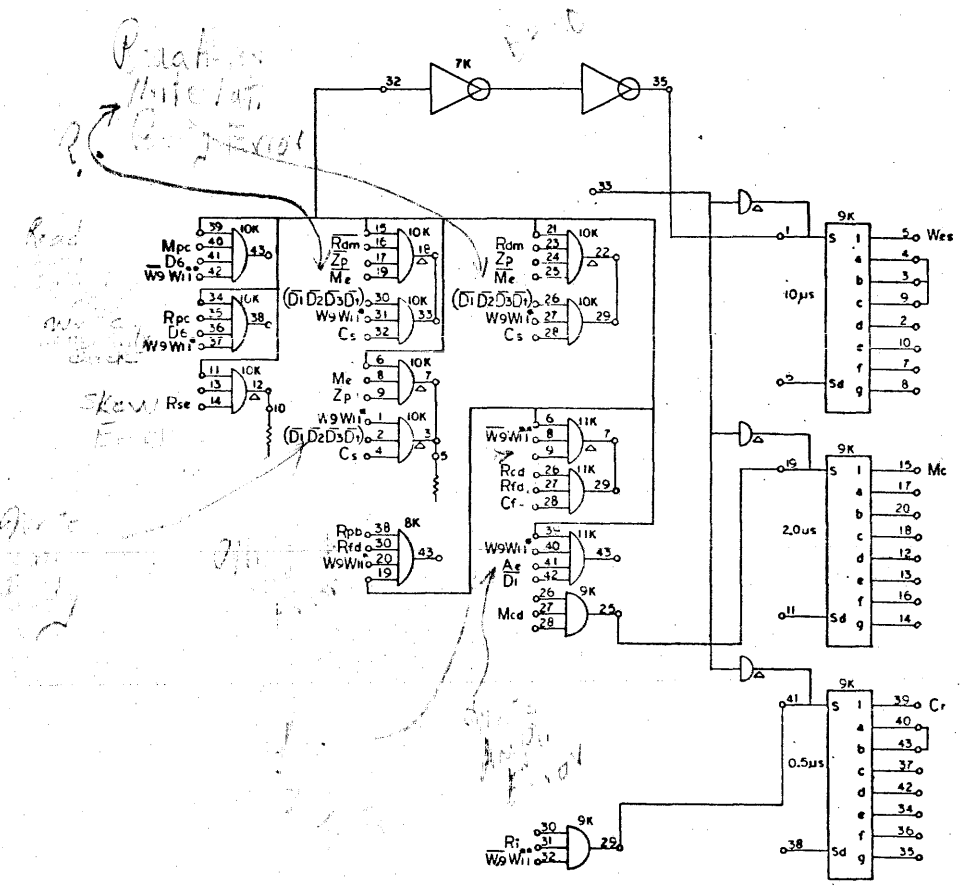

9K = [illegible]
8K = FH
11K = GC-10
10K = GC-10
7K = [illegible]-10

9348,
92483,9248 92481,92482
CONTROL
PAGE 22.
E

NO REQ	DRAWING NO	DESCRIPTION	REFERENCE DESIGNATION	FROM NO
		MATERIAL LIST		

NOTES UNLESS SPECIFIED

DRAWN	[illegible]	7-14-67
CHECK	[illegible]	[illegible]
APPR	[illegible]	7/14/67

SDS SCIENTIFIC DATA SYSTEMS

TITLE: DIAGRAM, LOGIC, MAG TAPE CONTROL UNIT

MODEL NO: 9248

NEXT ASSY

SIZE: D | DWG NO: 103257 | E

SCALE | DO NOT SCALE DRAWING | SHEET 22

103257 E

REV	REVISION	DATE	APPROVED
A	REL TO MFG		
D	SEE RE/E.O.		

103257 D

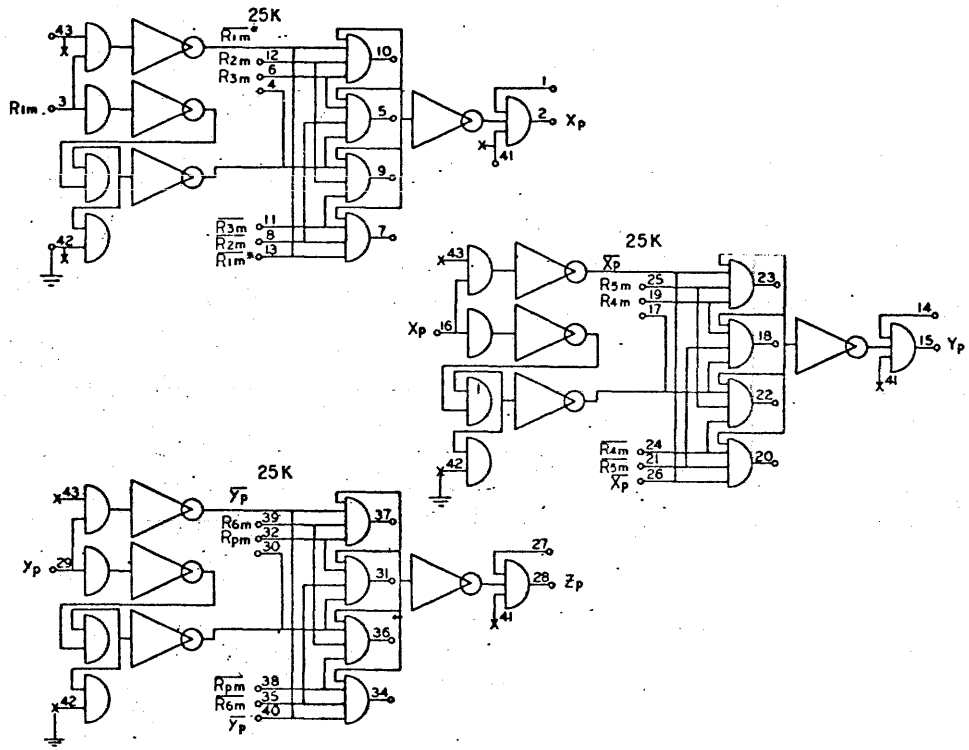

9348
92483,9248,92481,92482
TAPE CONTROL
PAGE 23

D

NO REQ	DRAWING NO	DESCRIPTION	REFERENCE DESIGNATION	SPEC NO

MATERIAL LIST

NOTES UNLESS SPECIFIED

DRAWN
CHECK
APPD 7/19/62

SDS

TITLE
DIAGRAM, LOGIC,
MAG TAPE CONTROL UNIT

MODEL NO 9248

NEXT ASSY

SIZE D DWG NO 103257 D

SCALE DO NOT SCALE DRAWING SHEET

103257 D1

REV	DESCRIPTION	CHK	DATE	APPROVED
A	REL. TO MFG			
D	SEE REV ED.			

103257 D

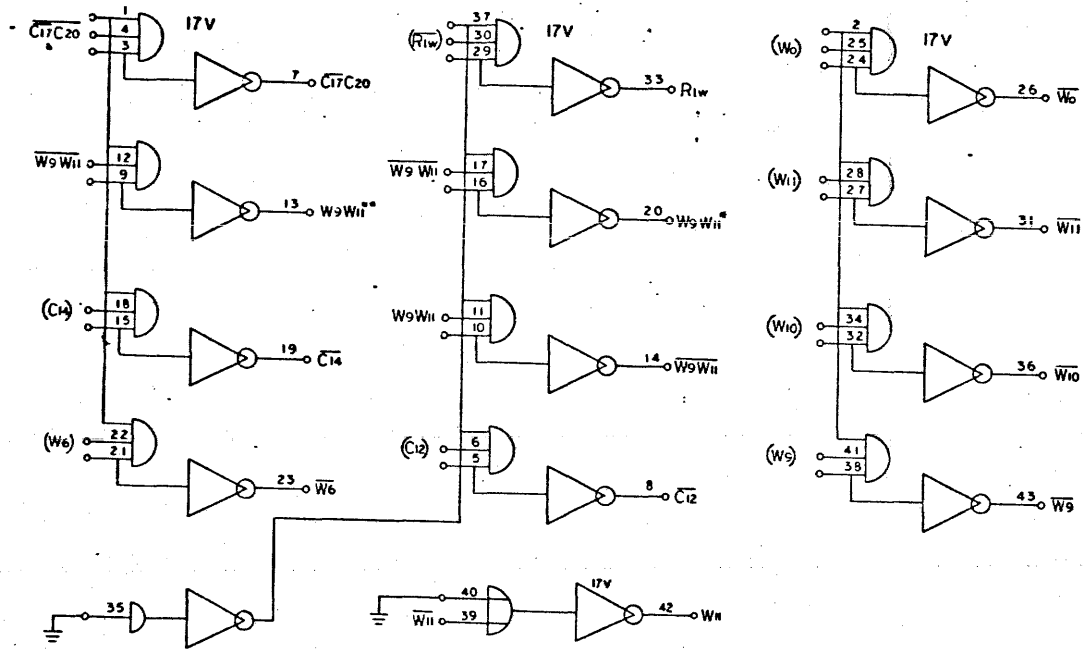

9348,
92483,9248,92481,92482
TAPE CONTROL
PAGE 24
D

DRAWING NO	DESCRIPTION	REFERENCE DESIGNATION

MATERIAL LIST

NOTES UNLESS SPECIFIED

DRAWN / CHECK / APPR

SDS

TITLE: DIAGRAM, LOGIC, MAG TAPE CONTROL UNIT

MODEL NO: 9248

SIZE D | DWG NO 103257 | D

SCALE | SHEET

REV	DESCRIPTION	DATE	APPROVED
A	REL TO MFG		
D	SEE REV E.O.		

103257 D

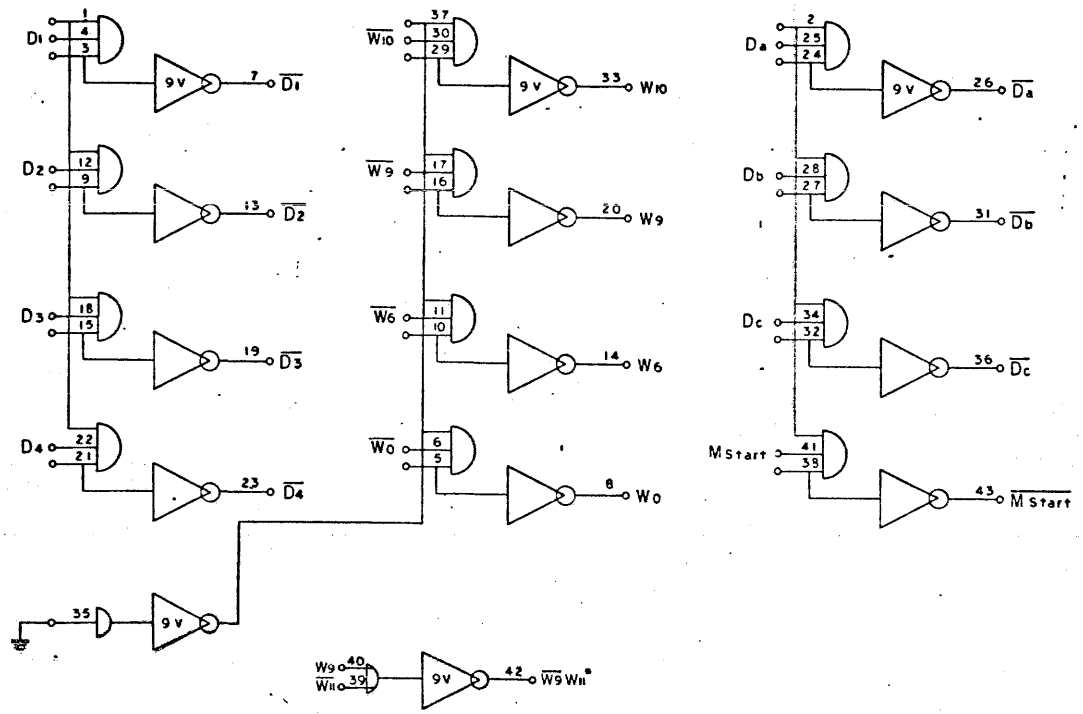

9348,9248,92481,92482,92483

TAPE CONTROL

PAGE 25

D

NO. REQ	DRAWING NO	DESCRIPTION	REFERENCE DESIGNATION	OTHER USE

MATERIAL LIST

NOTES UNLESS SPECIFIED

DRAWN / CHECK / APPR

SDS SCIENTIFIC DATA SYSTEMS

TITLE: DIAGRAM, LOGIC, MAG TAPE CONTROL UNIT

MODEL NO: 9248

NEXT ASSY

SIZE: D DWG NO: 103257 D

SCALE: DO NOT SCALE DRAWING SHEET

103257 D1

REVISIONS				103257	D
REV	DESCRIPTION	CHK	DATE	APPROVED	
A	REL TO MFG.				
D	SEE REV E.O.				

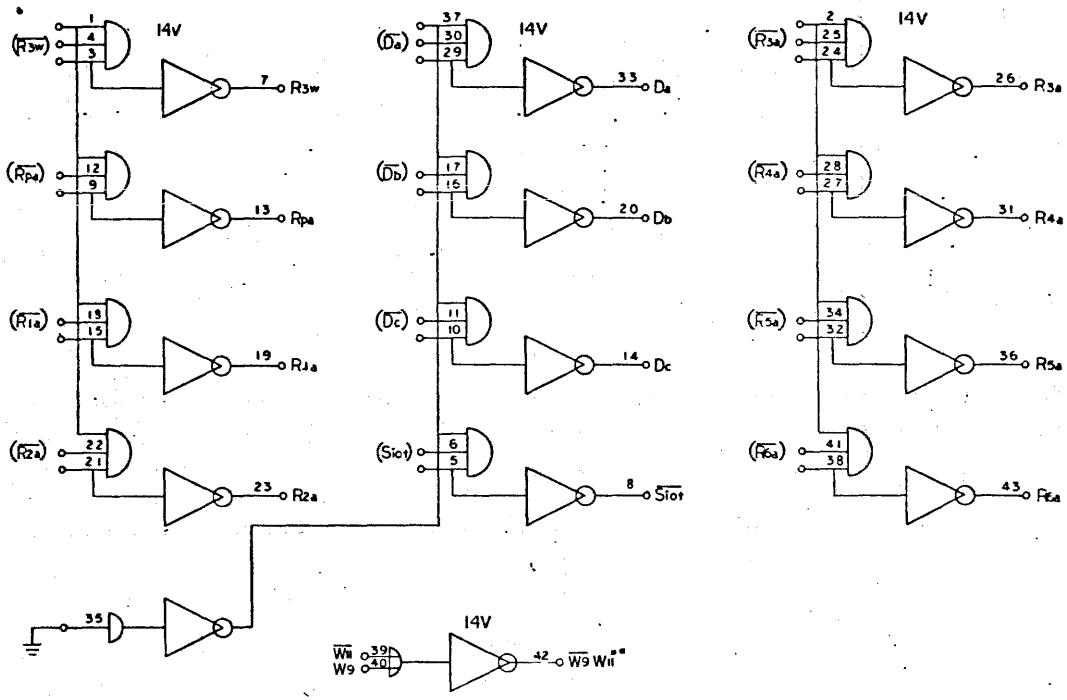

9348,
92483,9248,92481,92482
TAPE CONTROL
PAGE 26
D

PART REQ	DRAWING NO	DESCRIPTION	REFERENCE DESIGNATION	OPTIONS
		MATERIAL LIST		

NOTES UNLESS SPECIFIED

DRAWN		7/1/63
CHECK		
APPR		7/18/63

SDS

TITLE
DIAGRAM, LOGIC,
MAG TAPE CONTROL UNIT

MODEL NO 9248

NEXT ASSY

SIZE D | DWG NO 103257 | D

SCALE | DO NOT SCALE DRAWING | SHEET

103257 D

REV	DESCRIPTION	DATE	APPROVED
A	REL TO MFG		
D	SEE REV E O		

103257 D

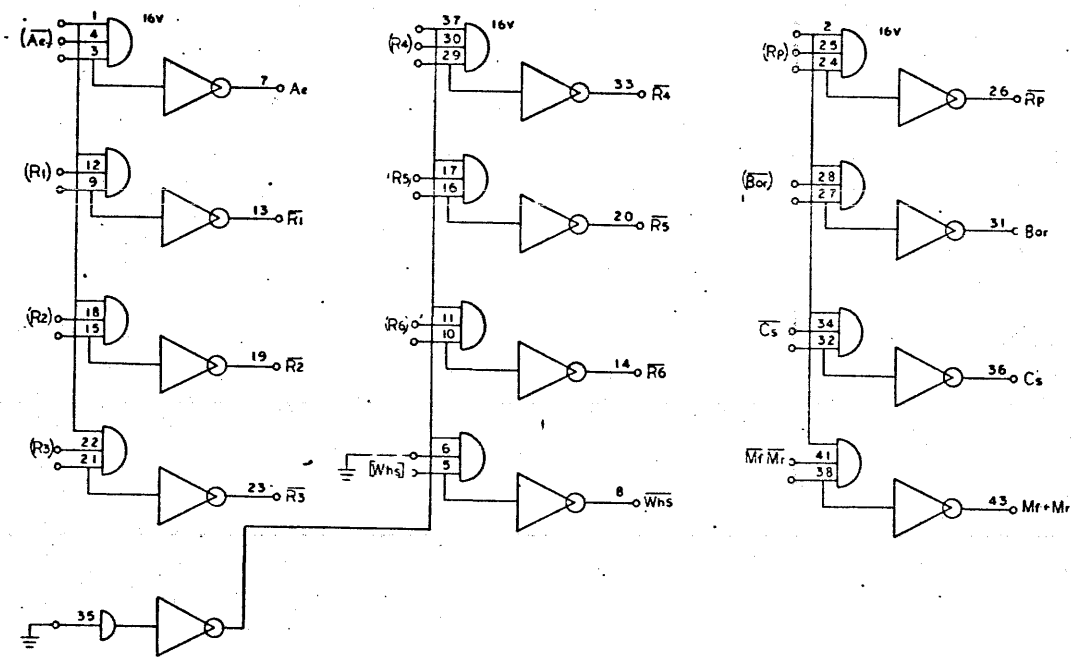

9348.
92483.9248,92481,92482
TAPE CONTROL
PAGE 27
D

NO REQ	DRAWING NO	DESCRIPTION	REFERENCE DESIGNATION	TYPE SIZE

MATERIAL LIST

NOTED UNLESS SPECIFIED

DRAWN
CHECK
APPR

SDS SCIENTIFIC DATA SYSTEMS

TITLE
DIAGRAM, LOGIC,
MAG TAPE CONTROL UNIT

MODEL NO 9248

NEXT ASSY

SIZE D DWG NO 103257 D

SCALE, DO NOT SCALE DRAWING SHEET

103257 D

REV	DESCRIPTION	CHK	DATE	APPROVED
A	REL TO MFG			
D	SEE REV E.O.			

103257 D

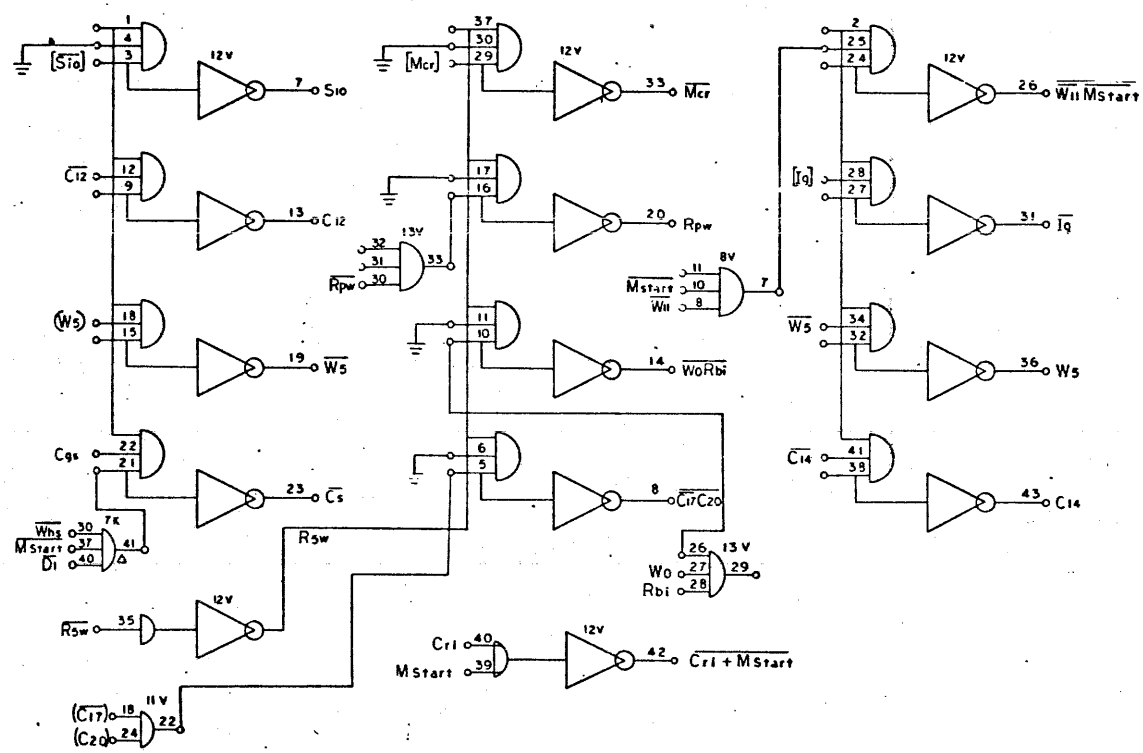

9348,
92483,9248,92481,92482
TAPE CONTROL
PAGE 28
D

NO. REQ.	DRAWING NO.	DESCRIPTION	REFERENCE DESIGNATION	SPEC. NO.

MATERIAL LIST

NOTES UNLESS SPECIFIED

DRAWN / CHECK / APPR

SDS SCIENTIFIC DATA SYSTEMS

TITLE: DIAGRAM, LOGIC, MAG TAPE CONTROL UNIT

MODEL NO. 9248

NEXT ASSY.

SIZE D — DWG. NO. 103257 — D

SCALE — DO NOT SCALE DRAWING — SHEET

103257 ID.1

REV	DESCRIPTION	CHK	DATE	APPROVED
A	REL. TO MFG.			
C	SEE REV. E.O.			
D	SEE REV E.O.			

103257 D

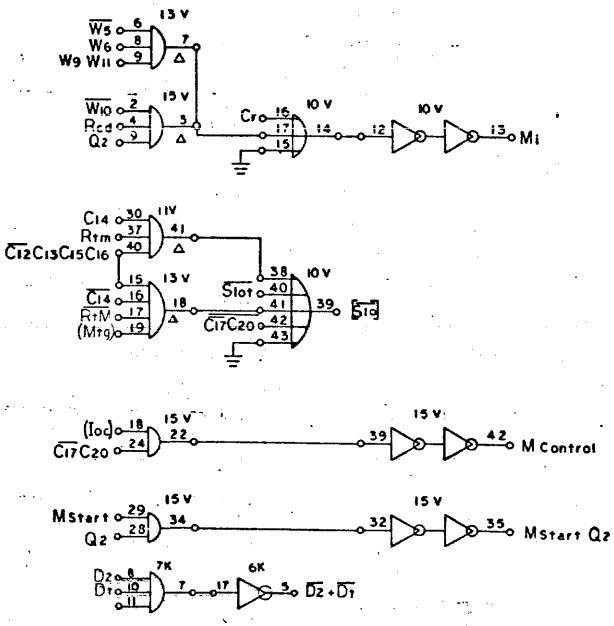

9348,
92483,9248,92481,92482
TAPE CONTROL
PAGE 30
D

SIZE	DRAWING NO.	DESCRIPTION	REFERENCE DESIGNATION
		MATERIAL LIST	

NOTES UNLESS SPECIFIED

DRAWN
CHECK
APPR

SDS

TITLE
DIAGRAM, LOGIC,
MAG TAPE CONTROL UNIT

MODEL NO. 9248

NEXT ASSY

SIZE D DWG NO. 103257 D

SCALE DO NOT SCALE DRAWING SHEET

REVISIONS				103257	D
REV	DESCRIPTION	CHK	DATE	APPROVED	
A	REL. TO MFG.				
C	SEE REV. E.O.				
D	SEE REV E.O.				

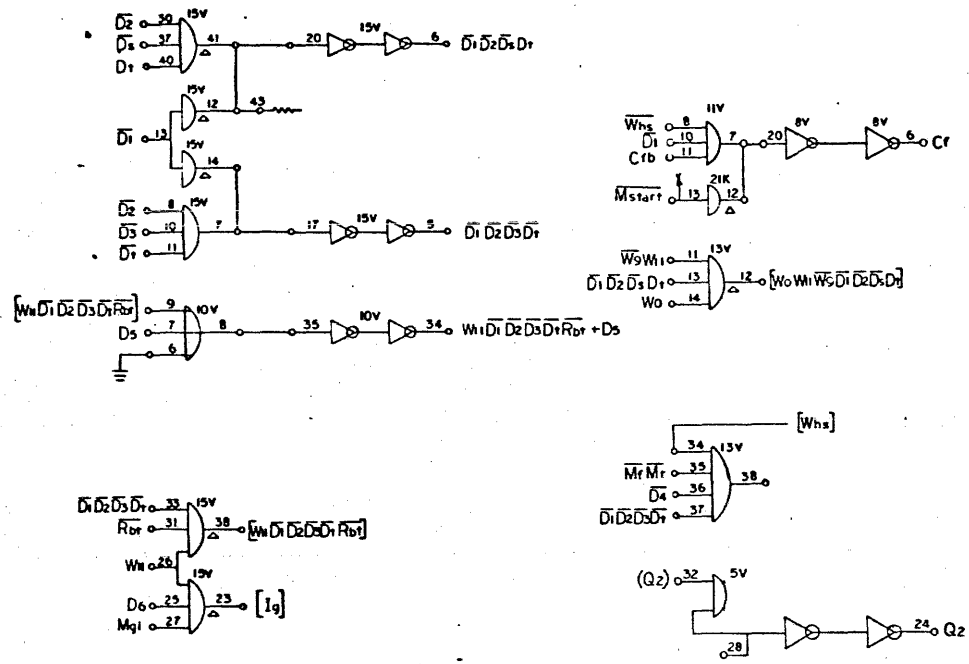

9348,
92483 9248,92481,92482
TAPE CONTROL
PAGE 31
D

NO REQ	DRAWING NO	DESCRIPTION	REFERENCE DESIGNATION	FIND NO
		MATERIAL LIST		

UNLESS OTHERWISE SPECIFIED

SDS

DIAGRAM, LOGIC,
MAG TAPE CONTROL UNIT

MODEL NO 9248

NEXT ASSY

SIZE D DWG NO 103257 C

SCALE NO TAPE SCALE DRAWING SHEET

103257 D1

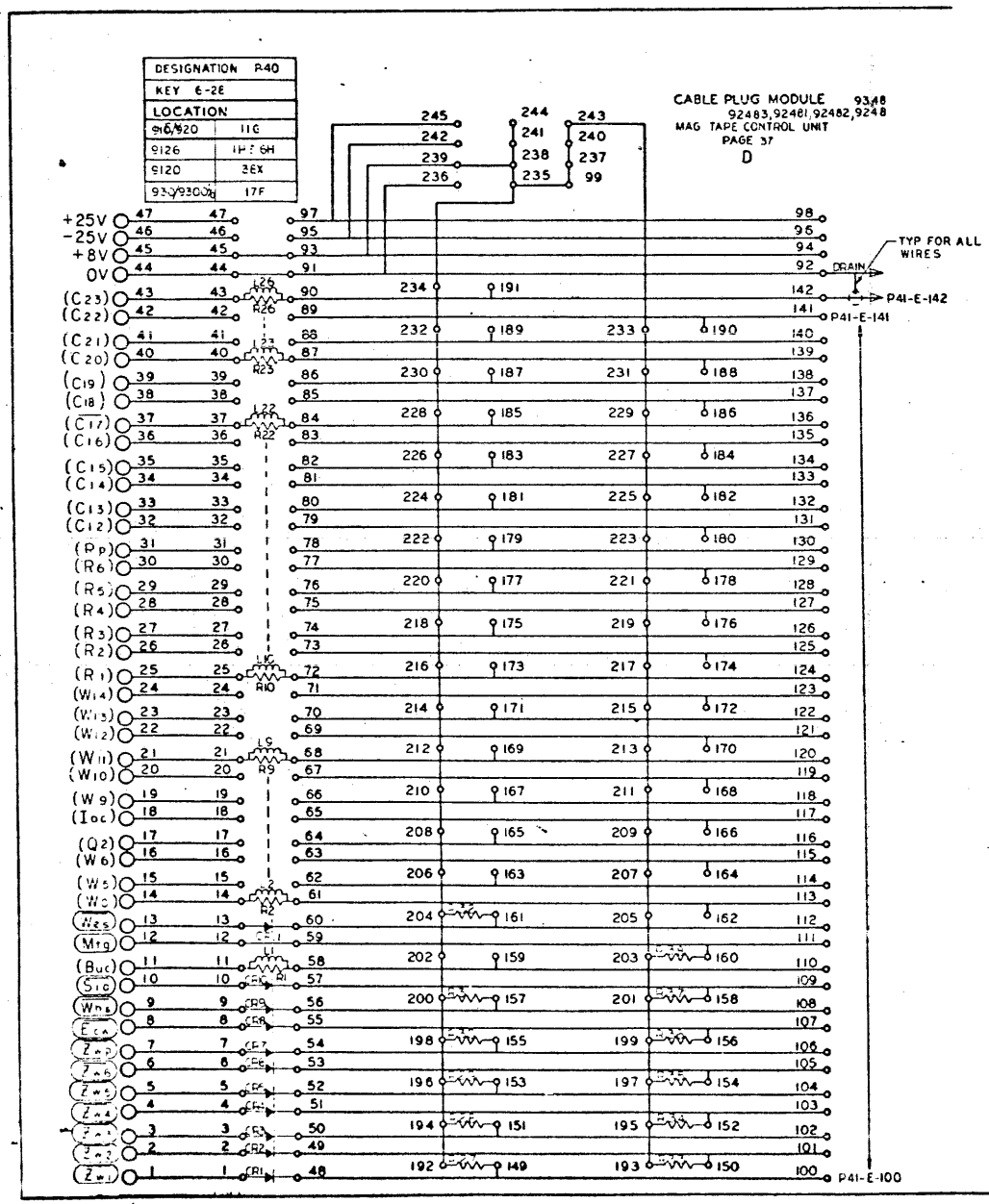

REVISIONS				103257 D
REV	DESCRIPTION	CHG	DATE	APPROVED
A	REL. TO MFG.			
D	SEE REV E.O.			

DRAWING NO.	DESCRIPTION	REFERENCE DESIGNATION

MATERIAL LIST

NOTES UNLESS SPECIFIED

DRAWN / CHECK / APPR

SDS

TITLE

DIAGRAM, LOGIC, MAG TAPE CONTROL UNIT

MODEL NO. 9248

NEXT ASSY.

SIZE D DWG NO. 103257 D

SCALE DO NOT SCALE DRAWING SHEET

103257 D

REVISIONS		103257 D
REV	DESCRIPTION	CHG / DATE / APPROVED
A	REL. TO MFG.	
D	SEE REV E.O.	

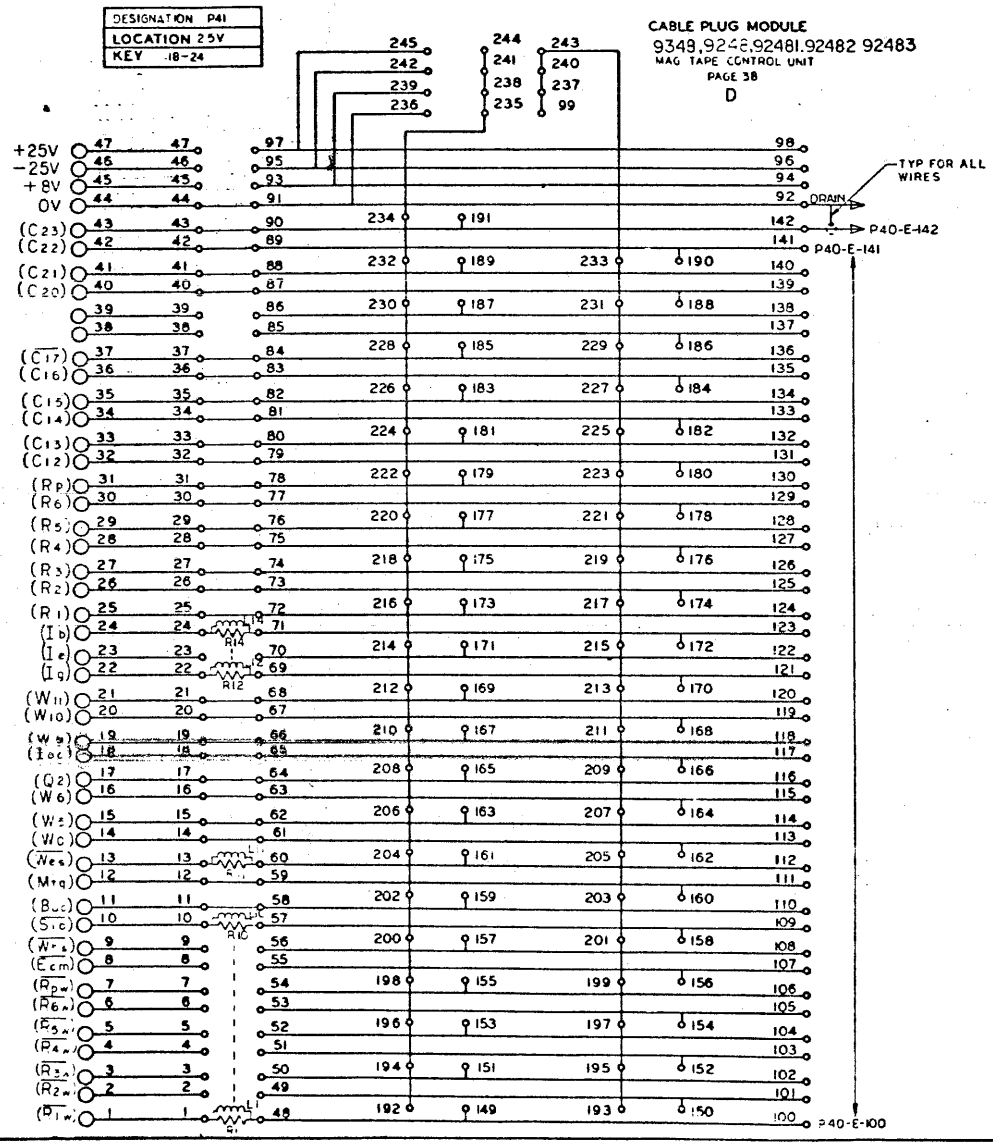

NO REQ	DRAWING NO.	DESCRIPTION	REFERENCE DESIGNATION	ITEM NO.
		MATERIAL LIST		

NOTES UNLESS SPECIFIED

1. INTERPRETATION PER MIL-STD-100 ANGULAR ± 1/2°
2. BREAK ALL SHARP EDGES 0.10 MAXIMUM.
3. FINISH: SHIPPING
4. ALL DIM. IN INCHES

DRAWN		7/9/63
CHECK		7/9/63
APPR.		7/9/63

SDS SCIENTIFIC DATA SYSTEMS

TITLE

DIAGRAM, LOGIC
MAG TAPE CONTROL UNIT

MODEL NO. 9248

NEXT ASSY.

SIZE D | DWG. NO. 103257 | D

SCALE | DO NOT SCALE DRAWING | SHEET

103257 D

REVISIONS				103257 E
REV	DESCRIPTION	CHG	DATE	APPROVED
A	REL TO MFG			
B	SEE REV E O			
C	SEE REV. E.O.			
D	SEE REV EO			
E	SEE REV EO			

PAGE	CHG	PAGE	CHG	PAGE	CHG	PAGE	CHG	PAGE	CHG
1	E								
2	D								
3	D								
4	D								
5	E								
* 6	E								
** 7	E								
8	E								
9	E								
10	E								
11	E								
12	D								
13	E								
14	D								
15	D								
16	E								
17	D								
18	D								
19	D								
20	E								
21	D								
22	E								
23	D								
24	D								
25	D								
26	D								
27	D								
28	D								
29	E								
30	D								
31	D								
32	E								
33	E								
34	E								
35	E								
36	E								
37	D								
38	D								
39	E								
40	E								

NOTES:
1. REV. LETTERS LISTED INDICATE STATUS OF EACH SHEET OF THIS MULTIPLE SHEET DRAWING.
2. CHECK INDIVIDUAL SHEETS FOR REVISION LETTER AGAINST THIS SHEET BEFORE USING THIS DRAWING.

* NOT USED ON 92481.

** NOT USED ON 92481, 9248.

REFERENCE DESIGNATIONS ARE ABBREVIATED. PREFIX THE DESIGNATION WITH UNIT NUMBER OR ASSEMBLY DESIGNATION OR BOTH. (MIL. STD. 168)

9348,
92483,9248,92481,92482
MAG TAPE CONTROL UNIT
PAGE 1
E

103257 F

NO REQ	DRAWING NO.	DESCRIPTION	REFERENCE DESIGNATION	NO REQ

MATERIAL LIST

NOTES UNLESS SPECIFIED

1. TOLERANCES
2. BREAK ALL SHARP EDGES
3. EACH SURFACE
4. ALL DRILL SIZES

DRAWN		
CHECK		
APPR.	WKF	7/14/64

SDS SCIENTIFIC DATA SYSTEMS
1640 FIFTEENTH STREET SANTA MONICA CALIFORNIA

TITLE
DIAGRAM, LOGIC
MAG TAPE CONTROL UNIT

MODEL NO. 9248

NEXT ASSY.

SIZE D DWG NO. 103257 E

SCALE DO NOT SCALE DRAWING SHEET 1 OF 40

Change	Reason
103257A Remove Resistor R1 (47 K Ω) from location 9K from Pin 40 to Pin 47. Add wire from Pin 40 to Pin 43 location 9K. Refer to Logic page 22 OX14 Module used for 92483 models	EO 103140C EO 103403J 800 BPI Operation Cri Timing Change. 200 KΩ Resistor in OX13 is used instead of 47 KΩ external. See page 22 Addendum for One Shot Timing Adjustment change.
103257E Added resistor 220 Ω 1/2 watt part #100111-221 from Pin 10V26 to 10V44 on back of chassis.	EO 103140D EO 107512B Resistor added for Digital to stair case test point. See page 29E for logic change.

Signal	Logic Pages	
Ae	27	22
$(\overline{Ae})$		27
Bor	27	9, 32
$(\overline{Bor})$		27
Buc	37	29, 38
Cf	31	4, 5, 6, 7, 8, 10, 22
Cfba	5	
Cfbb	6	
Cfbc	7	
→ Cfb		31
Cfra	5	
Cfrb	6	
Cfrc	7	
→ Cfr		8
Cfsa	5	
Cfsb	6	
Cfsc	7	
→ Cfs		28
Cr	8	5, 29
Cr $\overline{W5}$ W6	5	6, 7
Cr + Cs	8D	
Cr + W9 W11 Mc	8	9
Cr + Cf W9 W11	8	13
Cri	22	28
$\overline{Cri + M\ Start}$	28	18
Cs	27	8A, 9, 18, 22
$\overline{Cs}$	28	9, 27
C12	28	10, 34
(C12)	37	24, 34, 38
$\overline{CT2}$	24	10, 12, 28, 29
$(\overline{CT2})$	34	
$\overline{CT2}$ C13 C15 C16	29	13, 16, 30
(C13)	37	29, 35, 38
$(\overline{CT3})$	35	
C14	28	10, 16, 30, 34
(C14)	37	24, 38
$\overline{CT4}$	24	10, 13, 28, 30
$(\overline{CT4})$	34	
(C15)	37	29, 35, 38
$(\overline{CT5})$	35	
(C16)	37	29, 35, 38
$(\overline{CT6})$	35	

Signal	Logic Pages	
$(\overline{C17})$	37	28, 38
$\overline{C17}$ C20	24	29, 30, 34, 35
$\overline{C17\ C20}$	28	24, 30
(C20)	37	28, 38
(C21)	37	35, 38
$(\overline{C21})$	35	
(C22)	37	35, 38
$(\overline{C22})$	35	
(C23)	37	35, 38
$(\overline{C23})$	35	
Da	26	4, 5, 25
$\overline{Da}$	25	5
$(\overline{Da})$	26	
Db	26	4, 6, 25
$\overline{Db}$	25	6
$(\overline{Db})$	26	
Dc	26	
$\overline{Dc}$	25	7
$(\overline{Dc})$	26	
Ds	13	12
$\overline{Ds}$	13	10, 16, 31
Dt	13	10, 11, 30, 31
$\overline{Dt}$	13	11, 31
D1	12	13, 22, 24, 32
$\overline{D1}$	25	8, 28, 31
$\overline{D1}$ $\overline{D2}$ $\overline{D3}$ $\overline{Dt}$	31	16, 21, 31, 32
$\overline{D1}$ $\overline{D2}$ $\overline{Ds}$ Dt	31	11, 13, 29
D2	11	12, 13, 25, 30
$\overline{D2}$	25	12, 31
$\overline{D2} + \overline{Dt}$	30	36
D3	11	13, 25
$\overline{D3}$	25	31
D4	11	25
$\overline{D4}$	25	11, 31
D5	12	13, 31, 36
$\overline{D5}$	30A	
D6	12	22, 31
$(\overline{Ecm})$	32	38
$(\overline{Ecw})$	37	
Fb	4	9, 13
Gap	4	21
$\overline{Gap}$ + W9 W10 →		

Signal	Logic Pages	
→ W11 R2b	21	10
(Ib)	36	38
$(\overline{Ib})$	36	
(Ie)	36	38
$(\overline{Ie})$		36
Ig	28	
(Ig)	35	38
$\overline{Ig}$	35	
[Ig]	31	28
Ioc	37	30
Mc	22	8, 9, 29, 36
$(\overline{Mc})$	36	
Mca	4	
(Mca)	34	
$\overline{Mca}$	4	34
Mcb	4	
$\overline{Mcb}$		4
Mcc	4	
$\overline{Mcc}$		4
Mcd	4	22
M Control	30	13, 16, 34
$\overline{M\ Control}$	34	
[Mcr]	29	28
$\overline{Mcr}$	28	10
Me	10	19, 22
$\overline{Me}$	10	19, 22
Mf	10	11, 34
$\overline{Mf}$	10	
$(\overline{Mf})$	34	
$\overline{Mf}$ $\overline{Mr}$	11	12, 27, 31
Mf + Mr	27	11, 31
Mgi	13	31
$\overline{Mgi}$	13	
Mi	30	14, 15
Mpc	21	22
Mp	14	33
$\overline{Mp}$	14	21
$(\overline{Mp})$	33	
Mr	10	11, 12, 29, 32, 34
$\overline{Mr}$	10	
$(\overline{Mr})$	34	
$(\overline{Mre})$	32	

Signal	Logic Pages	
$(\overline{Mrs})$	32	
M Start	29	8A, 13, 25, 28, 20, 32
$\overline{M\ Start}$	25	8, 10, 11, 15, 16, 17, 28, 31
$\overline{M\ Start}$ $\overline{Rbi}$	8	9
M Start Q2	30	10, 11, 12, 34
$(\overline{M\ Start\ Q2})$	34	
Mtg	10	11, 38
$\overline{Mtg}$	10	
(Mtg)	36	30, 37
$(\overline{Mw})$	32	
M1	14	33
$\overline{M1}$	14	21
$(\overline{M1})$	33	
M2	14	33
$\overline{M2}$	14	21
$(\overline{M2})$	33	
M3	15	33
$\overline{M3}$	15	21
$(\overline{M3})$	33	
M4	15	33
$\overline{M4}$	15	21
$(\overline{M4})$	33	
M5	15	33
$\overline{M5}$	15	21
$(\overline{M5})$	33	
M6	15	33
$\overline{M6}$	15	21
$(\overline{M6})$	33	
Q2	31	11, 13, 30
(Q2)	37	31
R1	21	19
(R1)	37	27, 38
$\overline{R1}$	27	19, 21
R2	21	14, 19
(R2)	37	27, 38
$\overline{R2}$	27	14, 19, 21
R3	21	
(R3)	37	27, 38
$\overline{R3}$	27	19, 21
R4	21	15
(R4)	37	27, 38
$\overline{R4}$	27	15, 19, 21

Signal	Logic Pages	
R5	21	
(R5)	37	27, 38
$\overline{R5}$	27	19, 21
R6	21	15
(R6)	37	27, 38
$\overline{R6}$	27	19, 21
[$\overline{R1}$ $\overline{R2}$]	19	
R1a	26	4, 18, 29
$(\overline{R1a})$		26
R2a	26	4, 18, 29
$(\overline{R2a})$		26
R3a	26	4, 18, 29
$(\overline{R3a})$		26
R4a	26	4, 18, 29
$(\overline{R4a})$		26
R5a	26	4, 18, 29
$(\overline{R5a})$		26
R6a	26	4, 18, 29
$(\overline{R6a})$		26
R1b	16	19, 32
$\overline{R1b}$	16	19, 21
R2b	16	19, 21, 22, 32
$\overline{R2b}$	16	19, 21
R3b	17	19, 21
$\overline{R3b}$	17	
R4b	17	20, 21
$\overline{R4b}$	17	19
R5b	17	19, 21
$\overline{R5b}$	17	
R6b	17	20, 21
$\overline{R6b}$	17	19
[$\overline{R1b}$ R2b]	19	
[$\overline{R2b}$ R1b]	19	
R1m	18	14, 16, 23
$\overline{R1m}$	18	16, 21, 23
$\overline{R1m}$*		23
R2m	18	14, 16, 23
$\overline{R2m}$	18	1t, 21, 23
R3m	18	15, 17, 23
$\overline{R3m}$	18	17, 21, 23
R4m	18	15, 17, 23
$\overline{R4m}$	18	17, 21, 23

First logic page listed is signal source

Signal	Logic Pages	
R5m	18	15, 17, 23
$\overline{R5m}$	18	17, 21, 23
R6m	18	15, 17, 23
$\overline{R6m}$	18	17, 21, 23
R1w	24	14
(R1w)		24
[R1w]		19, 20
$\overline{R1w}$		14
$(\overline{R1w})$	20	38
(R2w)	20	38
R3w	26	15
[R3w]		19, 20
$\overline{R3w}$		15
$(\overline{R3w})$	20	26, 38
$(\overline{R4w})$	20	38
R5w	28	15
[R5w]		19, 20
$\overline{R5w}$		15, 28
$(\overline{R5w})$	20	38
$(\overline{R6w})$	20	38
Rbi	16	8A, 28
$\overline{Rbi}$	16	8
Rcd	9	8, 14, 16, 22, 29, 30, 31
$\overline{Rcd}$	9	29

Signal	Logic Pages	
Rbt	9	
$\overline{Rbt}$	9	31
Rdm	18	22
$\overline{Rdm}$	18	22
Rfb	13	
$\overline{Rfb}$	13	4, 5, 6, 7, 29
Rfd	9	8, 22, 29
$\overline{Rfd}$	9	
$\overline{Rfm}$	21	14
Ri	29	16, 17, 22
Rpa	26	4, 18, 29
$(\overline{Rpa})$		26
Rp	21	19
(Rp)	37	27, 38
$\overline{Rp}$	27	19, 21
$[\overline{Rp}\ \overline{R2}]$	19	
[Rp R2]	19	
Rpb	16	19, 22, 32
$\overline{Rpb}$	16	19, 21, 29
$[Rpb\ \overline{R2b}]$	19	
$[\overline{Rpb}\ \overline{R2b}]$	19	
Rpc	21	22
Rpm	18	16, 23
$\overline{Rpm}$	18	16, 21, 23
Rpw	28	14, 20

Signal	Logic Pages	
[Rpw]		19, 20
$\overline{Rpw}$		14, 28
$(\overline{Rpw})$	20	38
Rse	9	22
$\overline{Rse}$	9	
Rsk	29	
$\overline{RtM}$	30	
Rtm	14	29, 30
$\overline{Rtm}$	14	
$\overline{Rwe}$	20	
Sio	28	36
$(\overline{Sio})$	36	37, 38
$[\overline{Sio}]$	30	28
(Siot)		26
$\overline{Siot}$	26	30
Wes	22	36
$(\overline{Wes})$	36	37, 38
(Whs)	36	32
[Whs]		27
$\overline{Whs}$	27	8, 28, 31, 36
$(\overline{Whs})$	32	
W0	25	11, 28, 31
(W0)	37	24, 28
$\overline{W0}$	24	13, 25
$\overline{W0\ Rbi}$	28	32

Signal	Logic Pages	
$[W0\ \overline{W9}\ W11\ \overline{DT} \rightarrow \overline{D2}\ \overline{Ds}\ Dt]$	31	29
$\overline{W0}\ W5\ \overline{W6}\ W9\ W11$	11	16
$\overline{\overline{W0}\ W5\ \overline{W6}\ W9\ W11}$	11	
W5	28	11
(W5)	37	23, 38
$\overline{W5}$	28	5, 8, 9, 14, 29, 30, 32
$(\overline{W5}\ \overline{W9}\ W11\ Rcd + W9\ W11\ Mc\ Rfd)$	8	9
W6	25	5, 9, 30
(W6)	37	24, 38
$\overline{W6}$	24	11, 25, 32
W9	25	29
(W9)	37	24
$\overline{W9}$	24	10, 25, 29
W9 W11	29	4, 5, 6, 7, 8, 14, 19, 29, 30
W9 W11*	24	14, 15, 19, 22
W9 W11**	24	8, 9, 11, 13, 16, 21, 29, 32
$\overline{W9}$ W11	29	6, 7, 8, 31
$\overline{W9}$ W11*	25	14, 15, 16, 19
$\overline{W9}$ W11**		9, 11, 13, 16, 22, 32

Signal	Logic Pages	
$\overline{W9\ W11}$	32	24, 33
W9 W11 Me	19	
W9 W11 $\overline{Me}$	19	
$\overline{W9}$ W11 Me	19	
$(\overline{\overline{W9}\ W11})$	32	
$\overline{W9}$ W11 $\overline{Me}$	19	
W10	25	21, 32
(W10)	37	24, 38
$\overline{W10}$	24	10, 25, 30
W11	24	29, 31
(W11)	37	24, 38
$\overline{W11}$	24	20, 25, 28, 32
$W11\ \overline{D1}\ \overline{D2}\ \overline{D3} \rightarrow \rightarrow \overline{Dt}\ \overline{Rbt} + D5$	31	13, 18
$[\overline{W11}\ \overline{M\ Start}]$		29
$\overline{\overline{W11}\ \overline{M\ Start}}$	28	13
Xp, $\overline{Xp}$, Yp, $\overline{Yp}$	23	
Zp	23	22
$\overline{Zp}$		22
(W12), (W13), (W14)	37	
$(\overline{Zw1})$ thru $(\overline{Zw6})$	37	
$(\overline{Zwp})$	37	

First logic page listed is signal source

Change	Reason
103257A 5V is CX13 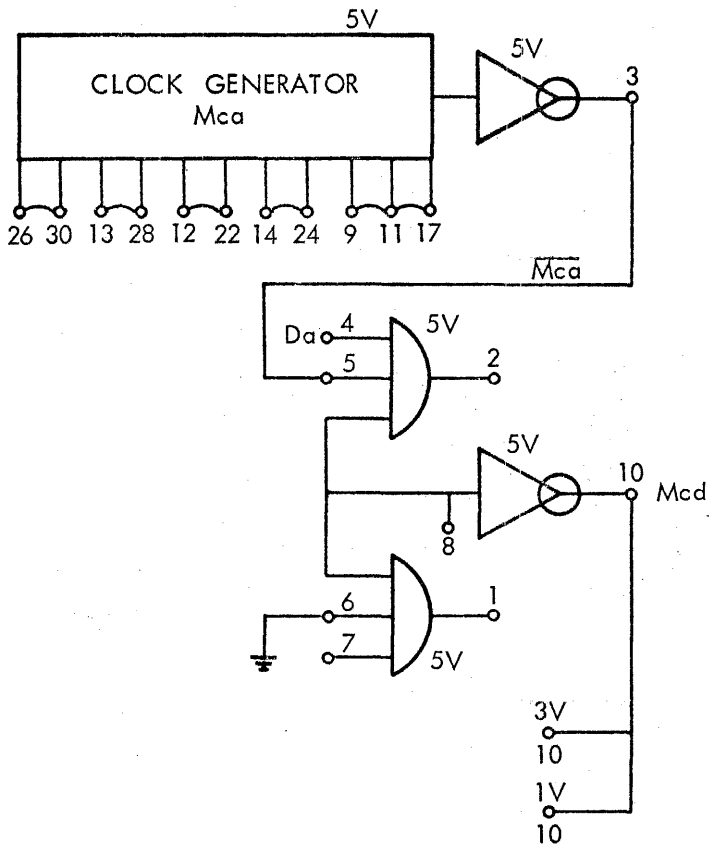	EO 103403B EO 103514B CX13 Clock Generator is not stable at 15KC. CX13 in location 5V was changed to a CK52. 9248 S/N 101 is only unit built with CX13.
103257B 5V is CK52 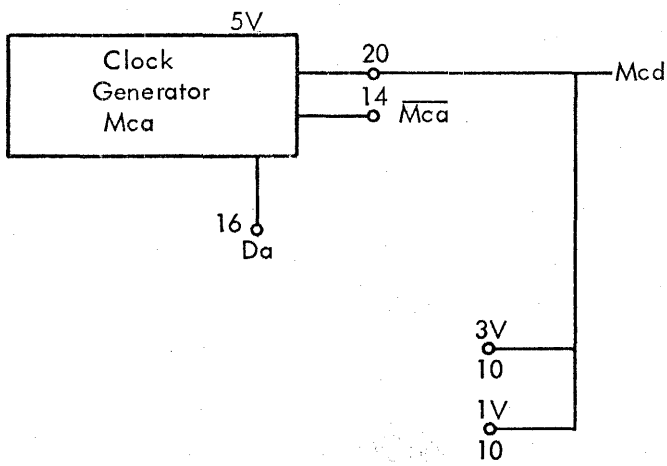	

Change	Reason
Major logic change from A to C logic revision level. Change D adds timing chart. See Page 5 A and D revision.	EO 103403F In earlier systems, characters were lost when reading high density (556 Bpi) tapes without Interlace. That is reading the remaining characters in a long block when the interlace count had reached "0". Cr and $\overline{W5}$ W6 Q2 were setting and resetting Rcd at the same time.
Relocation of Cf W9 W11 Gate on D Revision to E Revision. Location 6V to 7K. Also added new timing adjustment chart on the E revision logic level.	EO 103403S (for 92483) EO 107514H To insure compatibility between tape units at 800 Bpi operation. Change tightens the allowable write character skew.

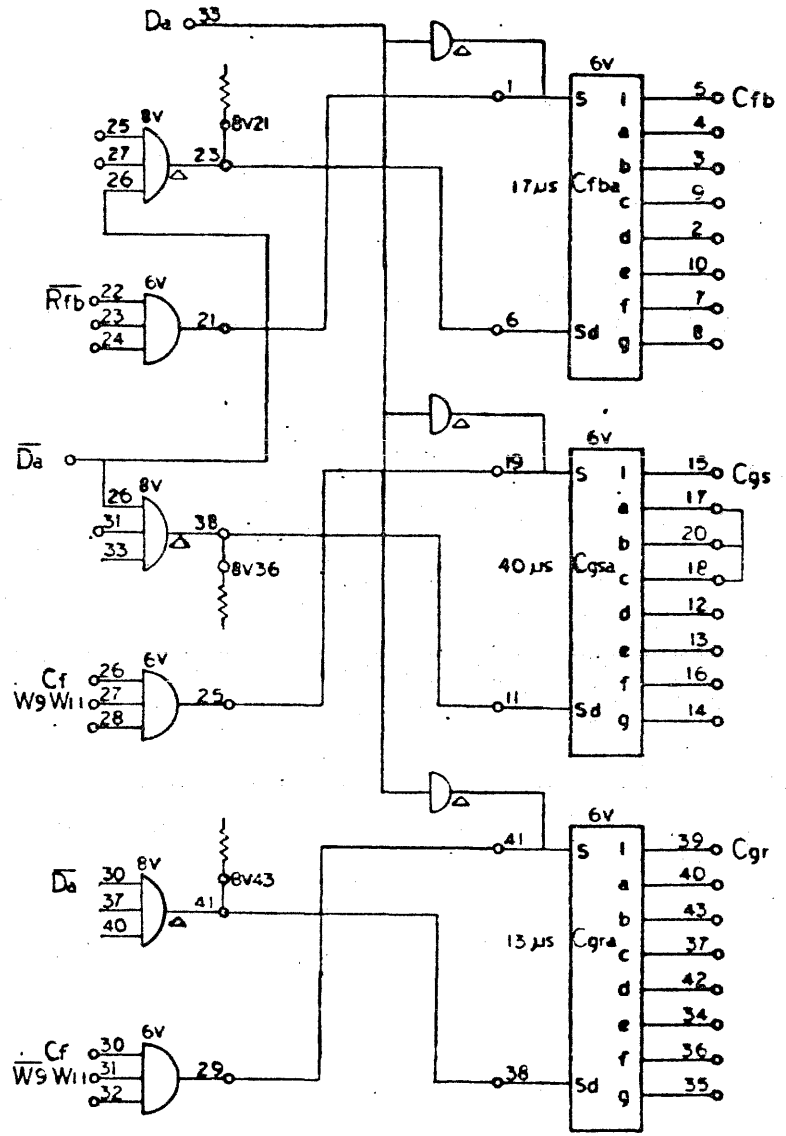

9248
TAPE CONTROL
PAGE 5
A

REV	DESCRIPTION
A	REL TO 103257
C	SEE REV. E.O.
D	SEE REV EO
E	SEE REV EO

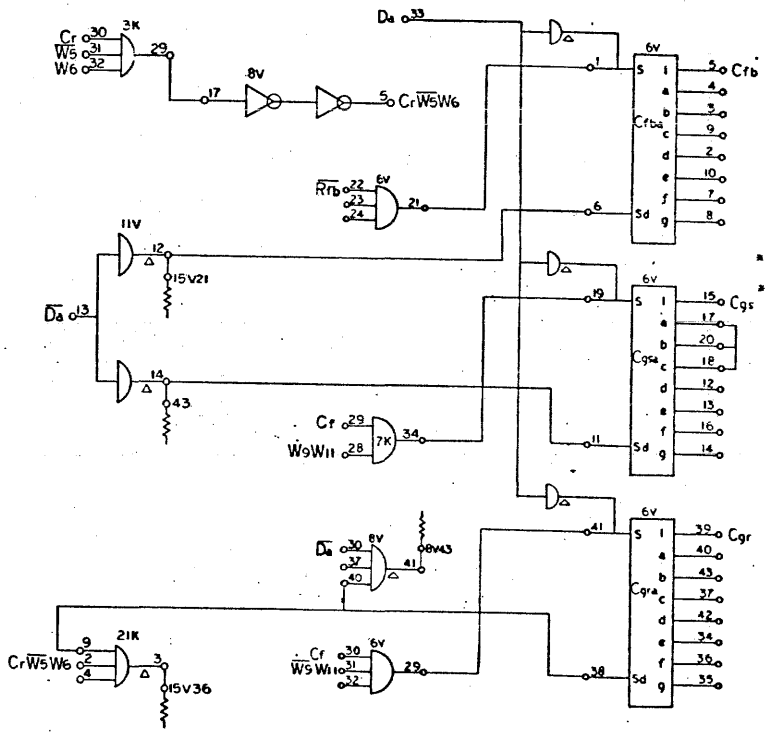

SIGNAL	12KC	15KC	24KC	33.3KC	41.7KC	66.7KC	48KC	60KC	96KC	
CHARACTER TIME	83.2us	67us	41.6us	30us	24us	15us	20.8us	16.7us	10.4us	
GAP DETECTOR	185us	150us	95us	67us	54us	34us	46us	37us	23us	7V14
DENSITY / SPEED	200/60	200/75	200/120	556/60	556/75	556/120	800/60	800/75	800/120	
Cfb	20us	17us	11us	8us	6us	4us	5us	4us	2us	2K5 2K5 2K5 2K5
* Cfb + Cgs SUM	60us	51us	32us	23us	18us	11us	15us	12us	8us	2K15 2K15 2K15 2K15
* Cfb + Cgr SUM	40us	34us	22us	16us	12us	8us	10us	8us	5us	2K39 2K39 2K39 2K39
D5	425us	350us	250us	425us	350us	250us	425us	350us	250us	2K15
D1	6ms	4.7ms	3.8ms	6ms	4.7ms	3.8ms	6ms	4.7ms	3.8ms	2K5
D2	1.6ms	1.6ms	1.0ms	1.6ms	1.6ms	1.0ms	1.6ms	1.6ms	1.0ms	3K15
D3	20ms	20ms	8ms	20ms	20ms	8ms	20ms	20ms	8ms	3K39
Crf	0.5us	←						→	0.5us	9K39
D4	14ms	←						→	14ms	3K5
D6	10us	←						→	10us	2K39

* TIMES GIVEN FOR Cgs & Cgr ARE TIMED TO FALL OF Cgs OR Cgr FROM RISE OF Cfb

9348, 9248, 92481, 92482, 92483
TAPE CONTROL
PAGE 5
E

REV REQ	DRAWING NO	DESCRIPTION	REFERENCE DESIGNATIONS	REV REQ
		MATERIAL LIST		

NOTES UNLESS SPECIFIED

DRAWN		
CHECK		
APPR		7/14/63

SDS

TITLE: DIAGRAM, LOGIC, MAG TAPE CONTROL UNIT

MODEL NO 9248

NEXT ASSY

SIZE D | DWG NO 103257 | E

SCALE | SHEET

103257 E

Change	Reason
Major logic change from A to C logic revision. Change D adds timing chart. See Page 5 A & D revision.	EO 103403F See Page 5 addendum sheet Item 1 for reason.
Added jumper between 4V4 and 4V3 on D revision to E revision. Deleted jumper between 4V40 and 4V43 on D revision to E revision. Also added new timing adjustment chart on the E revision logic level.	EO 107514H for 92483 only allows adjustment of Cfbb to new range. EO 103403S for all but 92483 allows adjustment of Cgrb to new range. EO 103403S EO 107514H (92483 only). See Page 5 addendum sheet Item 2 for reason.

CX-11

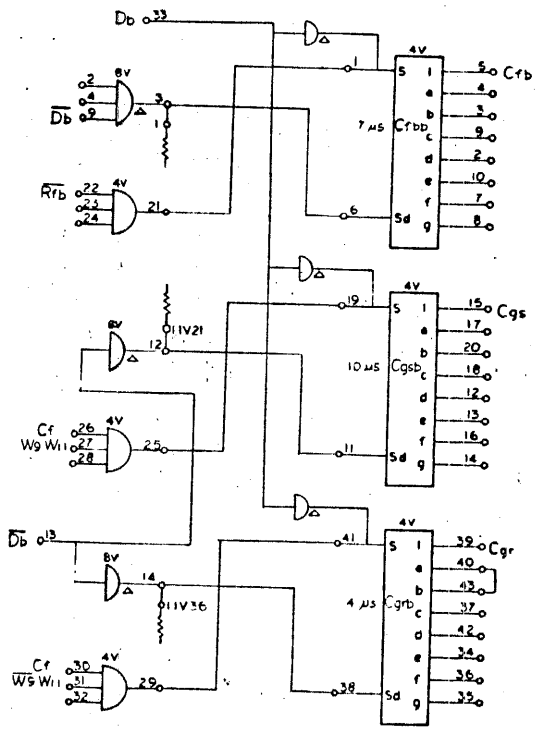
Db
Db
Rfb
Cf
W9 W11
Db
Cf
W9 W11
8V
4V
11V21
11V36
7 μs
Cfbd
10 μs
Cgsb
4 μs
Cgrb
Cfb
Cgs
Cgr

REVISIONS			103257 E
REV	DESCRIPTION		
A	REL TO MFG.		
C	SEE REV. E.O.		
D	SEE REV E.O.		
E	SEE REV EO		

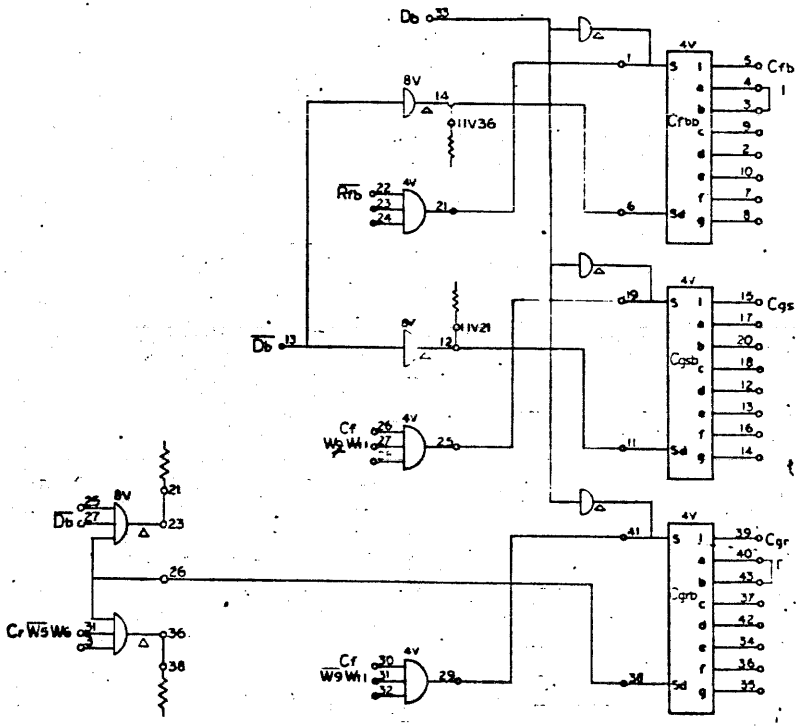

SIGNAL	12KC	15KC	24KC	33.3KC	41.7KC	66.7KC	48KC	60KC	96KC	
CHARACTER TIME	83.2us	67us	41.6us	30us	24us	15us	20.3us	16.7us	10.4us	
GAP DETECTOR	185us	150us	95us	67us	54us	34us	46us	37us	23us	7V14
DENSITY / SPEED	200/60	200/75	200/120	556/60	556/75	556/120	800/60	800/75	800/120	
Cfb	20us	17us	11us	8us	6us	4us	5us	4us	2us	2K5 B20 / 2K5 B20 / 2K5 B20
* Cfb + Cgs SUM	60us	51us	32us	23us	18us	11us	15us	12us	8us	1K5 B20 / 1K5 B20 / 1K5 B20
* Cfb + Cgr SUM	40us	34us	22us	16us	12us	8us	10us	8us	5us	1K5 B20 / 1K5 B20 / 1K5 B20
D5	425us	350us	250us	425us	350us	250us	425us	350us	250us	2K15
D1	6ms	4.7ms	3.8ms	6ms	4.7ms	3.8ms	6ms	4.7ms	3.8ms	2K5
D2	1.6ms	1.6ms	1.0ms	1.6ms	1.6ms	1.0ms	1.6ms	1.6ms	1.0ms	3K15
D3	20ms	20ms	8ms	20ms	20ms	8ms	20ms	20ms	8ms	3K39
Crf	0.5us	←							0.5us	9K39
D4	14ms	←							14ms	3K5
D6	10us	←							10us	2K39

* TIMES GIVEN FOR Cgs & Cgr ARE TIMED TO FALL OF Cgs OR Cgr FROM RISE OF Cfb

① 92483 ONLY

9348,9248,92482,92483
TAPE CONTROL
PAGE 6
E

DRAWING NO.	DESCRIPTION	REFERENCE DESIGNATION

MATERIAL LIST

SDS

DIAGRAM, LOGIC,
MAG TAPE CONTROL UNIT

9248

D 103257 E

Change	Reason
From A to C logic revision level added OR function to DC set input of Cgrc. 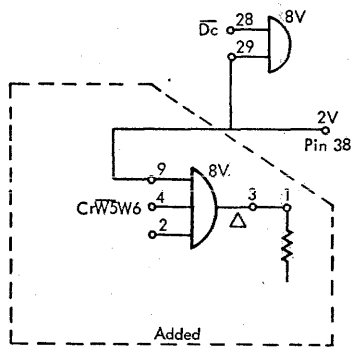 	EO 103403F See Page 5 addendum sheet Item 1 for reason.
Added timing chart from C logic revision to D logic revision.	Refer to Page 5D logic revision.
From D to E revision, added jumpers between pins 17, 18 and 20 location 2V. Also added new timing adjustment chart on the E revision logic level. OX14 Module replaces OX13 Module in location 2V to meet new timing adjustment. Module not used in 9248 or 92481.	EO 103403S EO 107514H (92483 only) See Page 5 addendum sheet Item 2 for reason. EO 107536B - 92482 EO 107537B - 92483 EO 107538B - 9348

REV	DESCRIPTION	DATE	APPROVED
A	REL TO MFG		
C	SEE REV. E.O.		
D	SEE REV E.O.		
E	SEE REV EO		

103257 E

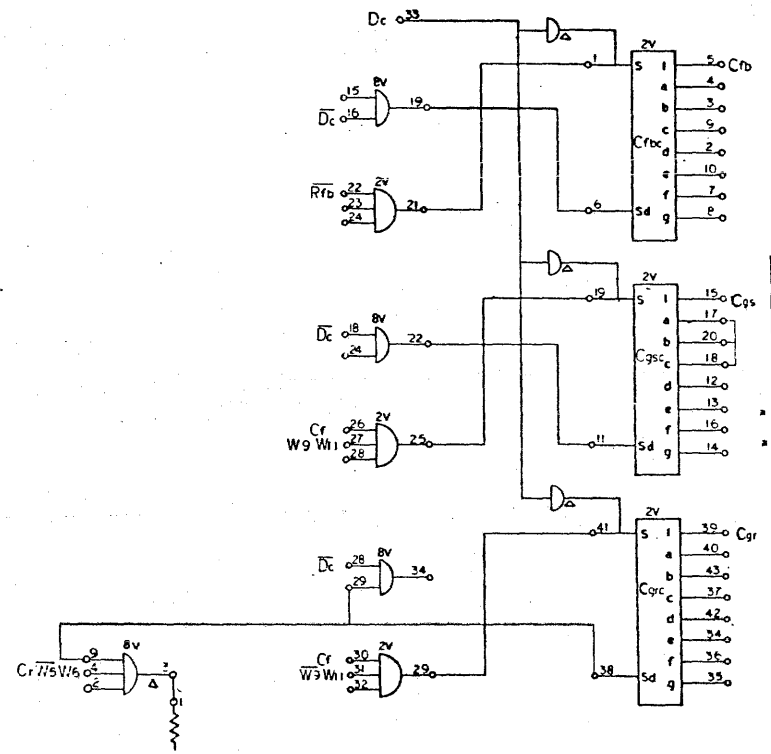

SIGNAL	12KC	15KC	24KC	33.3KC	41.7KC	66.7KC	48KC	60KC	96KC	
CHARACTER TIME	83.2 us	67us	41.6us	30us	24us	15us	20.8us	16.7us	10.4us	
GAP DETECTOR	185us	150us	95us	67us	54us	34us	46us	37us	23us	7V14
DENSITY / SPEED	200 / 50	200 / 75	200 / 120	556 / 60	556 / 75	556 / 120	800 / 60	800 / 75	800 / 120	
Cfb	20us	17us	11us	8us	6us	4us	5us	4us	2us	200 800 / 150 556 / 120 400 / 75 300 / 60
* Cfb, Cgs SUM	60us	51us	32us	23us	18us	11us	15us	12us	8us	
* Cfb, Cgr SUM	40us	34us	22us	16us	12us	8us	10us	8us	5us	
D5	425us	350us	250us	425us	350us	250us	425us	350us	250us	2K15
D1	6ms	4.7ms	3.8ms	6ms	4.7ms	3.8ms	6ms	4.7ms	3.8ms	2K5
D2	1.6ms	1.6ms	1.0ms	1.6ms	1.6ms	1.0ms	1.6ms	1.6ms	1.0ms	3K15
D3	20ms	20ms	8ms	20ms	20ms	8ms	20ms	20ms	8ms	3K39
Cri	0.5us	←							0.5us	9K39
D4	14ms	←							14ms	3K5
D6	10us	←							10us	2K39

* TIMES GIVEN FOR Cgs & Cgr ARE TIMED TO FALL OF Cgs OR Cgr FROM RISE OF Cfb

9348,
92482,92483
TAPE CONTROL
PAGE 7
E

NO REQ	DRAWING NO	DESCRIPTION	REFERENCE DESIGNATION	ITEM NO

MATERIAL LIST

NOTES UNLESS SPECIFIED

DRAWN / CHECK / APPR

SDS SCIENTIFIC DATA SYSTEMS

TITLE
DIAGRAM, LOGIC,
MAG TAPE CONTROL UNIT

MODEL NO 9248

NEXT ASSY

SIZE D DWG NO 103257 E

SCALE DO NOT SCALE DRAWING SHEET 7

103257 E

Change	Reason
103257A 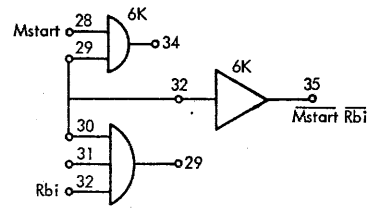 103257C 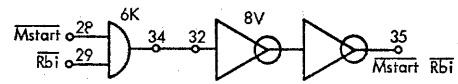 	EO 103403F See page 5 Addendum Sheet Item 1 for reason.
103257C 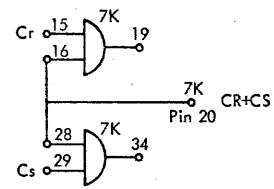 103257E 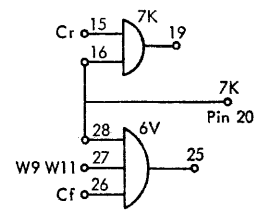 	EO 103403S EO 107514H See page 5 Addendum Sheet Item 2 for reason

REV	DESCRIPTION	CHK	DATE	APPROVED
A	REL. TO MFG.			
C	SEE REV. E.O.			
D	SEE REV E.O.			
E	SEE REV EO			

103257 E

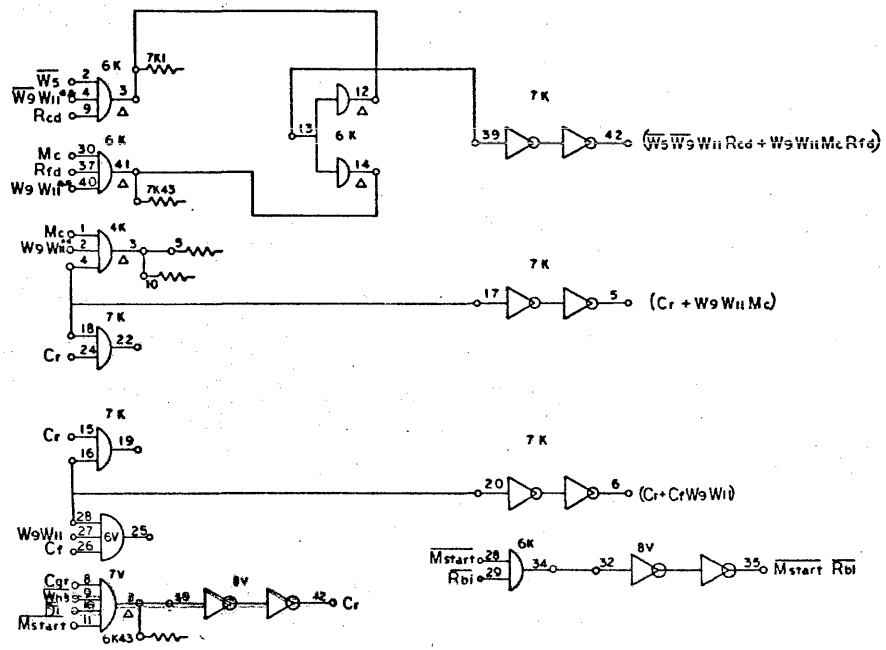

9348,
92483,9248,92481,92482

TAPE CONTROL

PAGE 8
E

NO REQ	DRAWING NO	DESCRIPTION	REFERENCE DESIGNATION	SPEC NO

MATERIAL LIST

NOTES UNLESS SPECIFIED

SDS

DIAGRAM, LOGIC,
MAG TAPE CONTROL UNIT

MODEL NO 9248

NEXT ASSY

SIZE D | DWG NO 103257 | E

SCALE | DO NOT SCALE DRAWING | SHEET

103257 E

Change	Reason
No logic changes made from A revision thru D revision.	EO 1034035 EO 107514H (92483 only).
From D revision to E revision changed clock input signal to Rse flip-flop from Rsk to Fb.	See Page 5 addendum sheet Item 2 for reason.

REVISIONS				103257	E
REV	DESCRIPTION	CHK	DATE	APPROVED	
A	PEL. TO MFG.				
D	SEE REV E.O.				
E	SEE REV EO				

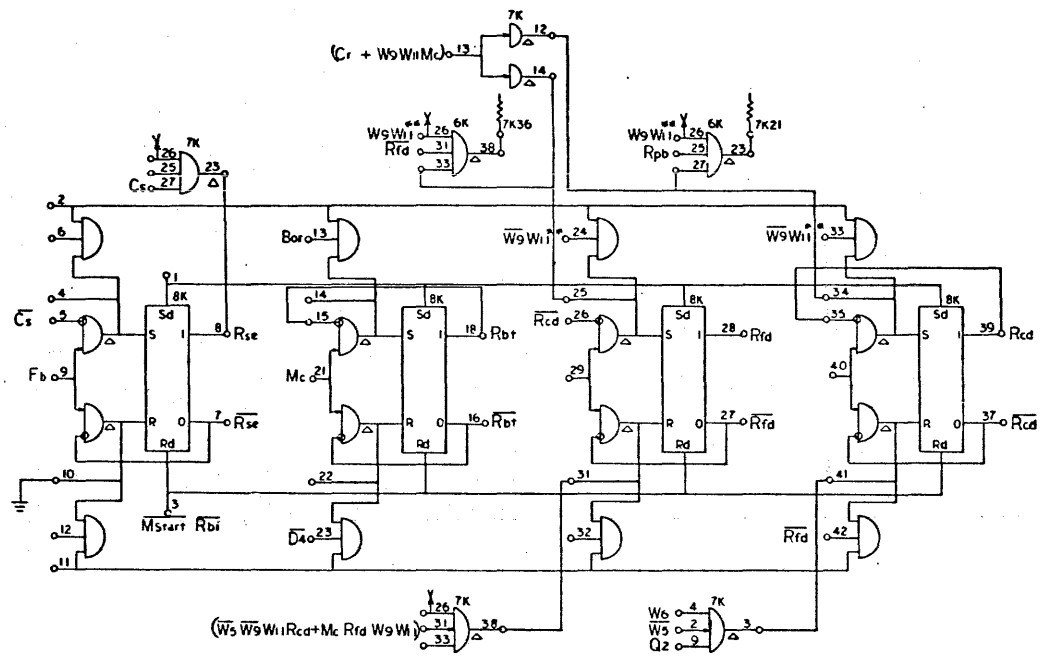

9348,
92483,9248,92481,92482
TAPE CONTROL
PAGE 9
E

NO. REQ	DRAWING NO.	DESCRIPTION	REFERENCE DESIGNATION	ITEM NO.
		MATERIAL LIST		

NOTES UNLESS SPECIFIED

DRAWN / CHECK / APPD

SDS SCIENTIFIC DATA SYSTEMS

TITLE: DIAGRAM, LOGIC, MAG TAPE CONTROL UNIT

MODEL NO. 9248

NEXT ASSY.

SIZE D | DWG NO. 103257 | E

SCALE | DO NOT SCALE DRAWING | SHEET 9

103257 E

Change	Reason
No logic changes made from A thru D revision. On E revision added $\overline{W10}$ or $\overline{W9}$ input to reset Mtg flip-flop. Added 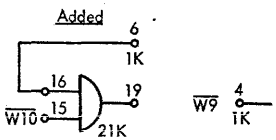 	EO 103403M EO 107514D (92483 only). To correct logic timing error in erase reverse operation.

REV	DESCRIPTION	DATE	APPROVED
A	REL TO MFG		
D	SEE REV E0		
E	SEE REV E0		

103257 E

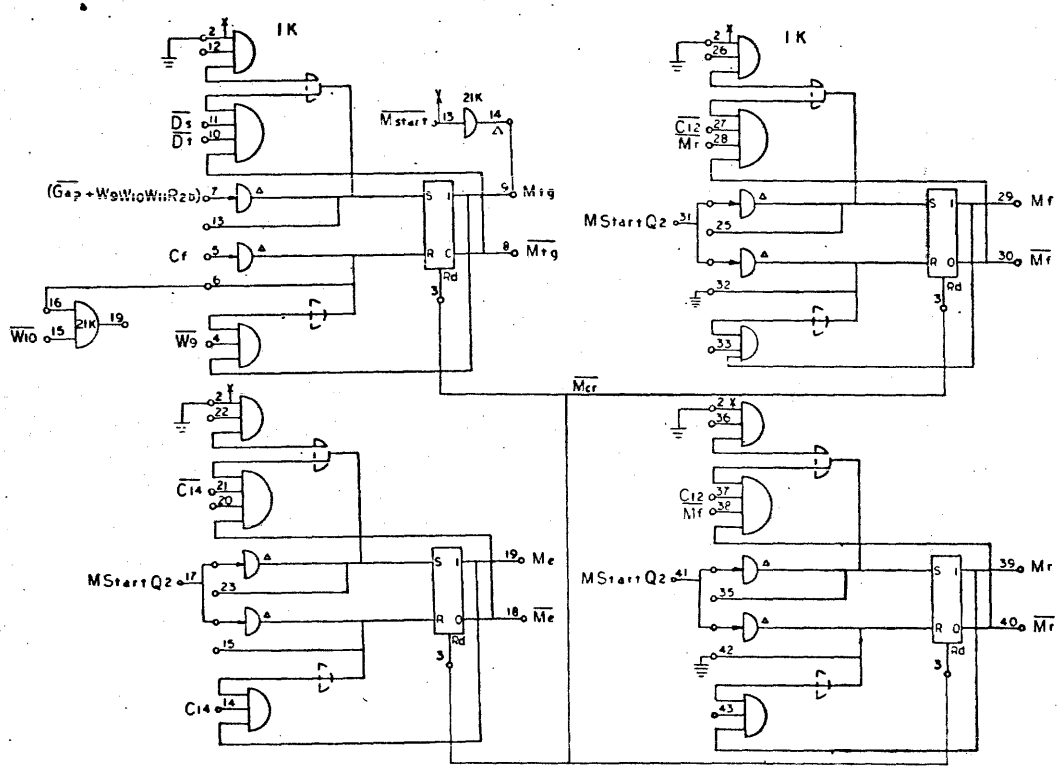

9348,
92483,9248,92481,92482
TAPE CONTROL
PAGE 10
E

DWG REQ	DRAWING NO	DESCRIPTION	REFERENCE DESIGNATION	ITEM NO
		MATERIAL LIST		

NOTES UNLESS SPECIFIED

DRAWN / CHECK / APPR

SDS

TITLE: DIAGRAM, LOGIC, MAG TAPE CONTROL UNIT

MODEL NO 9248

NEXT ASSY

SIZE D DWG NO 103257 E

SCALE DO NOT SCALE DRAWING SHEET

103257 E

Change	Reason
From A to D logic change switched input to D4 onshot from auxiliary input (pin 1) to D.C. set input (pin 6). Added ground to pin 1 location 3K.	EO 103403E To trigger D4 on leading edge of M start Q2 avoiding timing race condition.
From A to D logic change eliminated OR function to auxiliary set of D3 one-shot for model 92483 Also added timing chart for one shot settings. Refer to D Logic revision.	EO 107514A Effective with first release and shipment of 92483 model Nos.
From D to E logic change. (A) Changed timing adjustment chart for D3 one shot. (B) Removed time select connection to 3K Pin 43 D3 one-shot. (C) Removed $\overline{W9}$ W11** $\overline{W0}$ and gate circuitry OR function circuit from setting D3 and deleted note 1. (D) Relocated AND gate to location 17K to pick up Gap. relocation was 4K 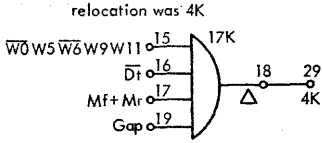 	EO 103403R EO 107514G (92483 only). On reverse erase, unit is stopping prematurely and leaving previously written information. This change keeps unit erasing until read head sees Gap and buffer clocking is finished. EO 103403P Not listed on left from D to E logic level, deletes circuitry covered by note (1) and transfers circuitry to Page 13.

REVISIONS				103257	E
REV	DESCRIPTION			DATE	APPROVED
A	REL TO MFG				
D	SEE REV E.O.				
E	SEE REV EO				

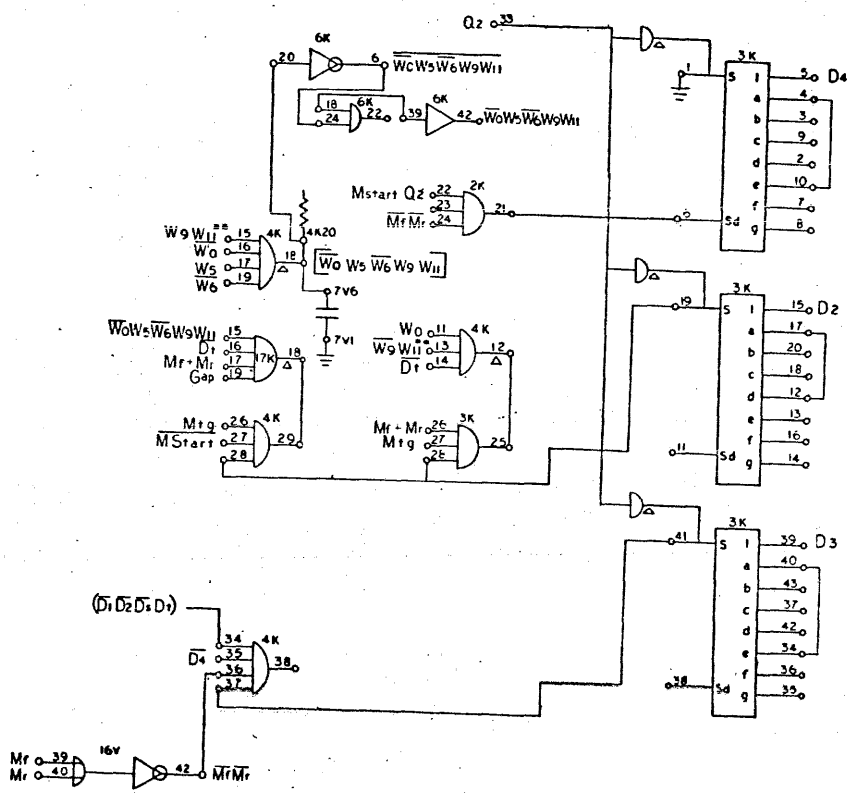

ONE SHOT SETTING

MODEL	D4	D2	D3
9248	14ms	1.6ms	20ms
92481			20ms
92482		1.6ms	1*
92483		1.0ms	8ms
9348	14ms	1.6ms	20ms

1* 92482A—20ms
92482P—8ms

9348,
92483,9248,92481,92482
TAPE CONTROL
PAGE 11
E

NO. REQ	DRAWING NO	DESCRIPTION	REFERENCE DESIGNATION	STOCK NO.
		MATERIAL LIST		

NOTES UNLESS SPECIFIED

DRAWN		
CHECK		
APPR		

SDS SCIENTIFIC DATA SYSTEMS

TITLE
DIAGRAM, LOGIC,
MAG. TAPE CONTROL UNIT

MODEL NO 9248

NEXT ASSY

SIZE D DWG NO 103257 E

SCALE DO NOT SCALE DRAWING SHEET 11

103257 E

Change	Reason
	EO 103403E
From A to C logic revision removed $\overline{W10}$ to Pin 15 location 21K. Reset term Dt flip-flop.	To trigger D4 or leading edge of M start Q2 avoiding timing race condition.
	EO 107514A
From C to D logic revision added additional OR function to reset term of Dt flip-flop for 92483 models only.	Effective with release and shipment of first 92483 model Nos. See D revision logic.
	EO 103403M
From D to E revision logic deleted 21K Pins 15, 16 & 19 and added W9 W11 term to 6K Pin 8.	Relocation of components only, no logical change.
	EO 103043P
Adds circuitry covered by note (1) D revision logic to all model Nos. on E revision.	Relocated from logic revision level D Page 11 for all models. To overcome tape creep problems.

REV	DESCRIPTION	DATE	APPROVED
A	REL TO MFG		
C	SEE REV E.O.		
D	SEE REV E.O.		
E	SEE REV EO		

REVISION NO 103257 E

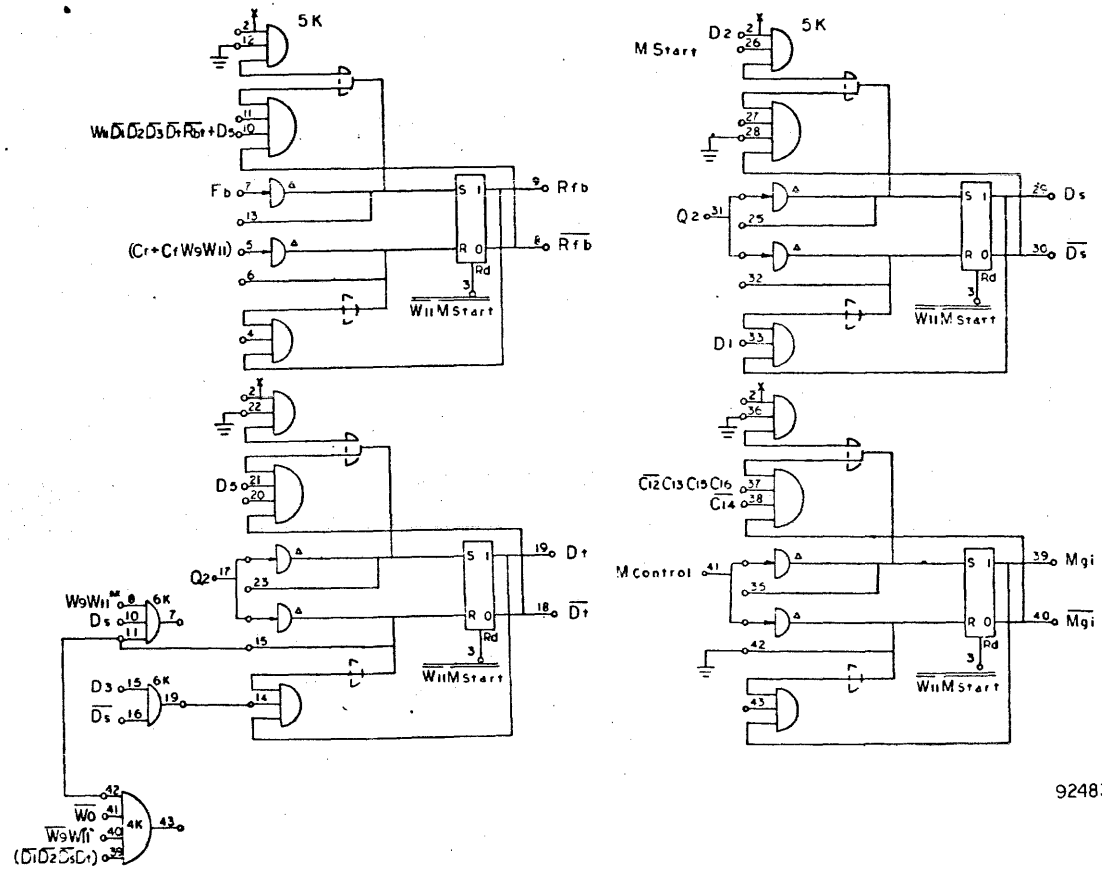

9348,
92483,9248,92481,92482
TAPE CONTROL
PAGE 13
E

103257 E

NOTES UNLESS SPECIFIED	DRAWN		SDS
	CHECK		DIAGRAM, LOGIC, MAG TAPE CONTROL UNIT
	APPR		
MODEL NO 9248			SIZE D — DWG NO 103257 — E
NEXT ASSY			SCALE — SHEET

Change	Reason
From A through D revision level of logic, no changes. From D to E revision level of logic: 103257D 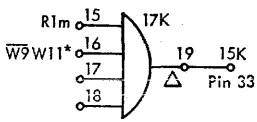 103257E 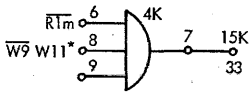 	EO 103403R EO 107514G (92483 only) Rearrangement of components to pick up extra diode. No logic change. Part of reverse erase problem leaving previously written information.

REV	DESCRIPTION	DATE	APPROVED
A	SEE REV E.O.		
D	SEE REV E.O.		
E	SEE REV E.O.		

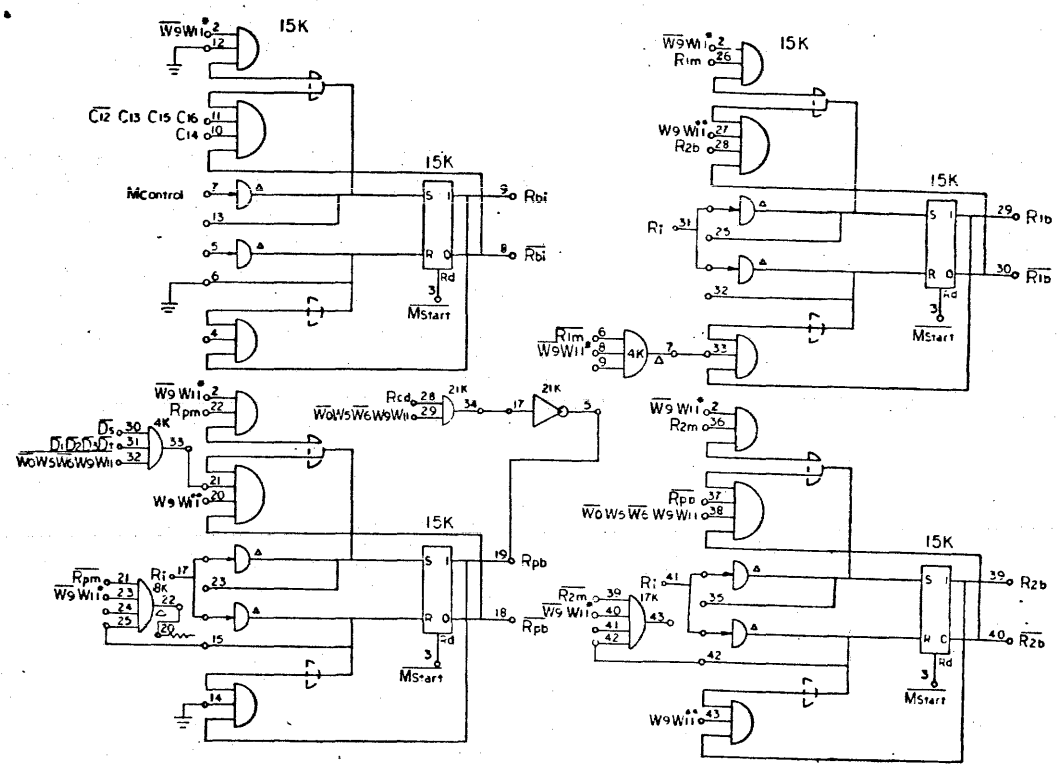

9348
9248 3,9246,9248 1 9248 2
TAPE CONTROL
PAGE 16
E

NO REQ	DRAWING NO	DESCRIPTION	REFERENCE DESIGNATION	OPTION NO

MATERIAL LIST

NOTES UNLESS SPECIFIED

1. TOLERANCES
2. BREAK ALL SHARP EDGES
3. MACH SURFACES
4. ALL DIM IN INCHES

DRAWN
CHECK
APPR

SDS SCIENTIFIC DATA SYSTEMS

TITLE
DIAGRAM, LOGIC,
MAG. TAPE CONTROL UNIT

MODEL NO 9248

NEXT ASSY

SIZE D DWG NO 103257 E

SCALE

NO SCALE DRAWING

SHEET

103257 F1

Change	Reason
From A thru D logic revisions, no changes.	
From D to E logic revision, major logic change in gating RW signals.	EO 103403M EO 107514D (92483 only)
Compare logic revisions D & E.	To correct logic timing error on erase reverse operation

REV	DESCRIPTION	DATE / APPROVED
A	REL TO MFG	
D	SEE REV E.O.	
E	SEE REV EO	

103257 E

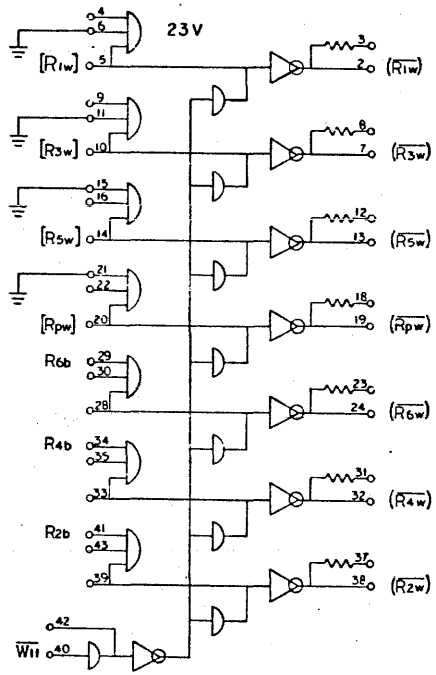

9348
92483,9248,92481,92482
TAPE CONTROL
PAGE 20
E

NO REQ	DRAWING NO.	DESCRIPTION	REFERENCE DESIGNATION	ITEM NO.

MATERIAL LIST

NOTES UNLESS SPECIFIED

DRAWN		
CHECK		
APPR		

SDS

TITLE
DIAGRAM, LOGIC,
MAG TAPE CONTROL UNIT

MODEL NO. 9248

NEXT ASSY

SIZE D DWG NO. 103257 E

SCALE DO NOT SCALE DRAWING SHEET

103257 E1

Change	Reason
From A to D logic change deleted 47KΩ resistor from 9K pin 40 to pin 47 (+25v).	EO 103140C EO 103403J EO 107514A
Added jumper from 9K pin 40 to 9K pin 43.	Uses 220K resistor in OX13 module instead of 47K external for timing increase change.
.5 μsec time change to 2.0 μs except for 92483 which uses OX14 module in 9K. With 92483 use .5 μsec.	OX14 module effective on first 92483 shipped.
From D to E logic change all models use OX14 in location 9K and hence all have Cri signal set at .5 μsec.	EO 103403L EO 103140D EO 103403S
Deleted jumper between 9K17 and 9K20. Added jumpers between 9K pins 3, 4 and 9.	OX13 module in location 9K changed to OX14. EO 107514H (92483 only) 92483 has OX14 and is not affected. Cri now .5 μsec on all models.
From D to E Adds buffered signal to set Wes one-shot. Set side was DC input, is now auxiliary input. Compare D and E logic.	DONE 7 NOV 75 EO 103403L EO 107514C One-shot (Wes) being triggered by noise causing false errors in multi unit systems.

Change	Reason
No logic changes from A logic to D logic revision level.	
From D to E logic revision levels major changes were made. Compare D and E logic.	
Added additional OR gate input to Ri at pin 31 10v, removed ground to pin 31.	EO 103403M EO 107514D (92483 only) To correct timing error in erase reverse operation.
	EO 103043S EO 103140D
Eliminated Rsk signal and combined Rpa and R1a through R6a into an analog test gate. Resistor added from 10v pin 26 to ground is 220 Ω . An explanation of the test gate is offered on page 29 Addendum B.	EO 107514H EO 107512B 92483 only To insure interchangeability between tape units at 800 BPI. Write skew error detection was tightened to tighten allowable write character skew.

10V Pin 26 Analog to Staircase Converter

The "OR" gate which was once RSK, is now used to detect the quality of the electrical deskew. The driven logic has been replaced with a 220 ohm resistor load. The value has been adjusted such that each bit as it occurs will cause a step of about one volt in amplitude. In the case of an all "ones" frame the converter will generate a signal staircase with a maximum of seven volts.

The leading edge of the waveform reflects the head mechanical misalignment, (gap scatter and gap are differential), for both the read and write head. The trailing edge shows how well the electrical compensation for these characteristics was accomplished.

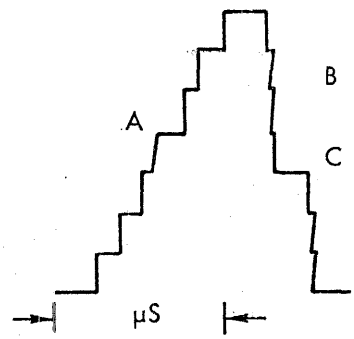

Staircase A, during the read pass of an "all ones" tape, is a measure of the skew in microseconds. This value will be in the order of up to 2 or 3 microseconds.

Sfaircase B exclusive of Point C would show how well the read deskew has been done. Point C would exist if one adjustment has been missed or incorrectly done. Although this differential is easily seen at the test point, re-adjustments are quite inaccurate and should not be attempted using only the test point. It is basically for qualitative checking.

If the tape unit is put in the "test mode" after read deskew, the write head scatter can be seen. This measurement would show if the misalignment is too bad to respond to any compensation.

After the alignment of write deskew, the test point will again show the quality of deskew. At 800 BPI this uncompensated deskew should be less than 1.5 μs when observing the signal developed by an exerciser pass.

REV	DESCRIPTION	CHK	DATE	APPROVED
A	REL. TO MFG.			
D	SEE REV ED			
E	SEE REV EC			

103257 E

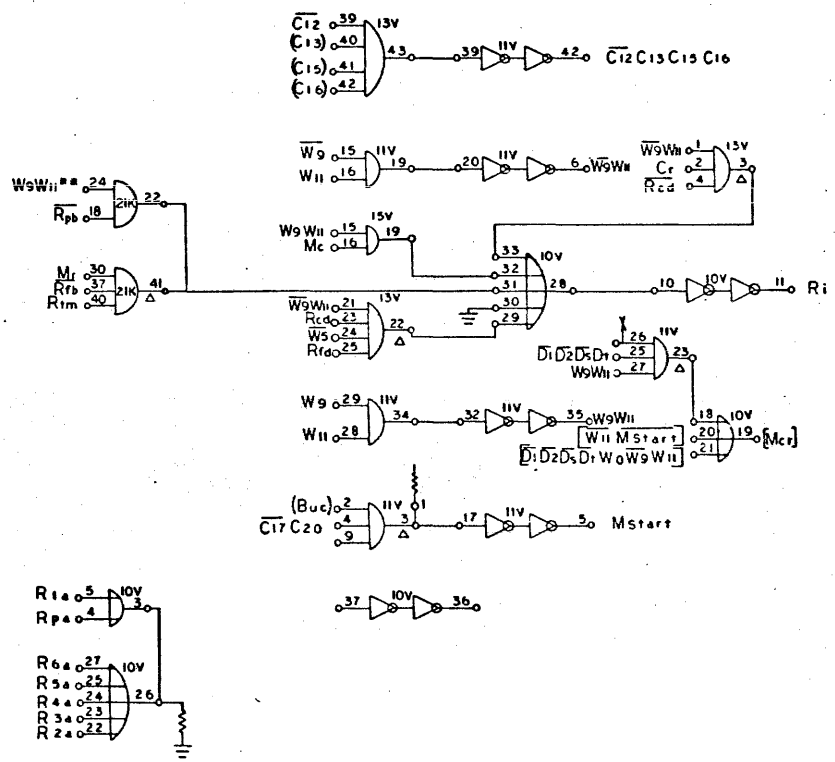

9348,
92483,9248,92481,92482
TAPE CONTROL
PAGE 29
E

DRAWING NO.	DESCRIPTION	REFERENCE DESIGNATION

MATERIAL LIST

NOTES UNLESS SPECIFIED

SDS

DIAGRAM, LOGIC,
MAG TAPE CONTROL UNIT

MODEL NO. 9248

NEXT ASSY.

SIZE D | DWG NO. 103257 | E

SCALE | DO NOT SCALE DRAWING | SHEET

Change	Reason
From A to C logic revision level major changes made to gating terms making up $[\overline{Sio}]$ Also $\overline{D5}$ signal eliminated and $\overline{D2} + \overline{Dt}$ added. Compare A and D logic revisions.	EO 103403D Forward search failures were noted when running 15KC system programs on 15KC/42.7KC tape systems. An EOM to convert a scan to a read could result in Rcd locking on due to the longitudinal check character. As a result, the I/O Buffer would receive an erroneous clock prior to the first data character of the ensuing block.

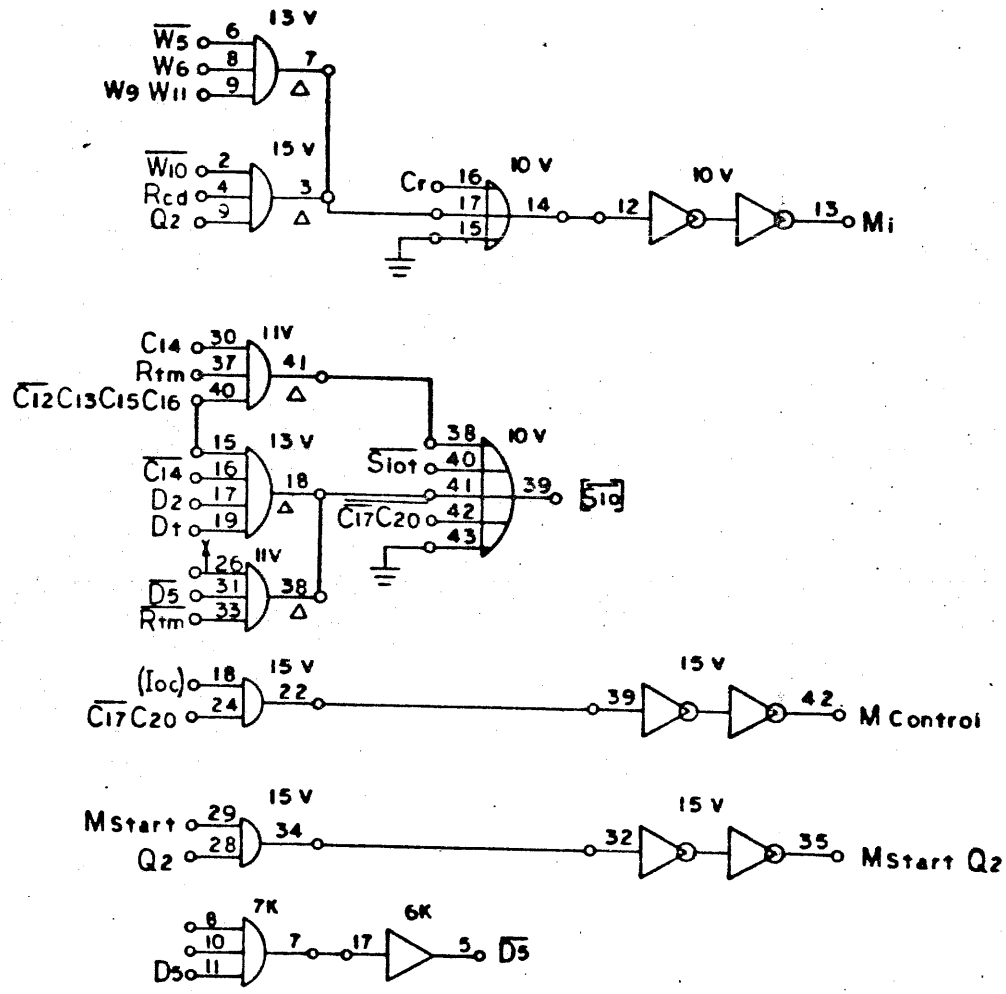

9248
TAPE CONTROL
PAGE 30
A

Change	Reason
From A to C logic revision level, Q2 buffer relocated 103257A 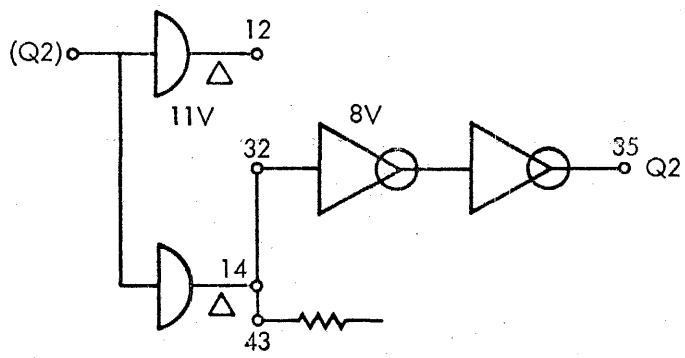 103257C & D 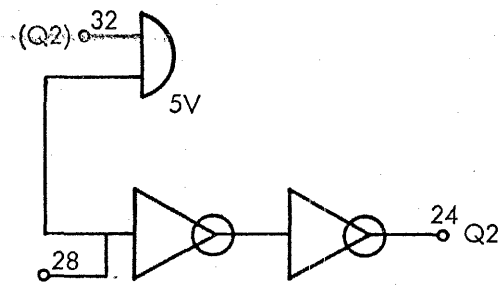 	EO 103403F Relocation of (Q2) to Q2 signal no logic change. Diode gates in 11V were required in revising gates to Cfba and Cgsa on C level logic change page 5.

Change	Reason
103257A 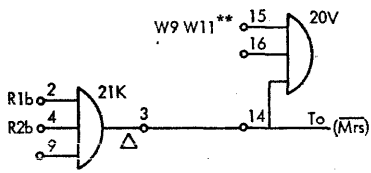 	EO 103403F Eliminates W9 W11** term from gating to ($\overline{Mrs}$) term. See Addendum Sheet page 5 Item 1 for reason.
103257C & D 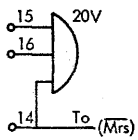 	
103257E 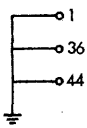 On Logic Pages 32 through 36	No logic change, only indicates that AX14 Module returns are tied to ground.

REV	DESCRIPTION	BY	DATE	APPROVED
A	SEL TO MFG			
C	SEE REV. E.O.			
D	SEE REV E.O.			
E	SEE REV EO			

103257 E

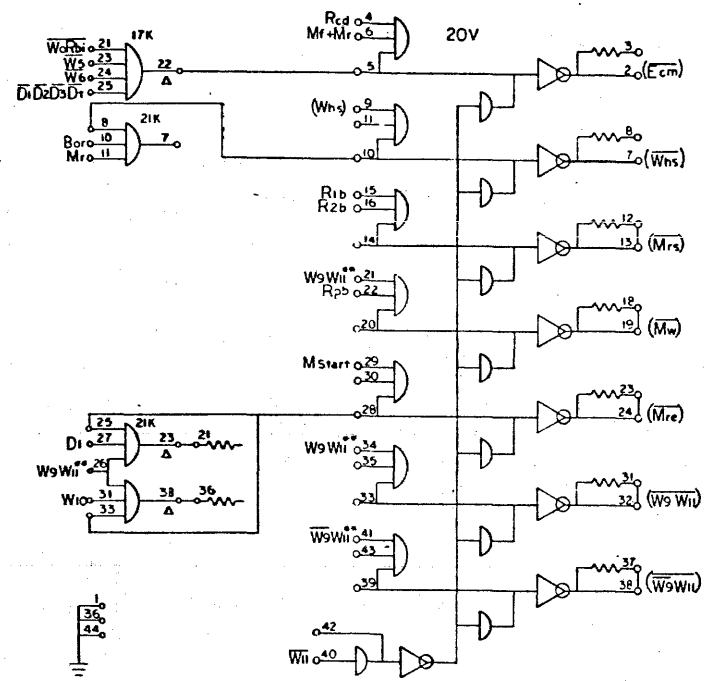

9348,
92483 9248,92481,92482
TAPE CONTROL
PAGE 32
E

NO. REQ	DRAWING NO	DESCRIPTION	REFERENCE DESIGNATION	ITEM NO.
		MATERIAL LIST		

NOTES UNLESS SPECIFIED

1. TOLERANCES
2. BREAK ALL SHARP EDGES
3. FINISH SURFACES
4. ALL DIM. IN INCHES

DRAWN
CHECK
APPR

SDS SCIENTIFIC DATA SYSTEMS

TITLE
DIAGRAM, LOGIC,
MAG TAPE CONTROL UNIT

MODEL NO 9248

NEXT ASSY

SIZE D DWG NO 103257 E

SCALE DO NOT SCALE DRAWING SHEET 32 OF 40

REVISIONS		103257	E
REV	DESCRIPTION	DATE	APPROVED
A	REL TO MFG.		
D	SEE REV E.O.		
E	SEE REV EO		

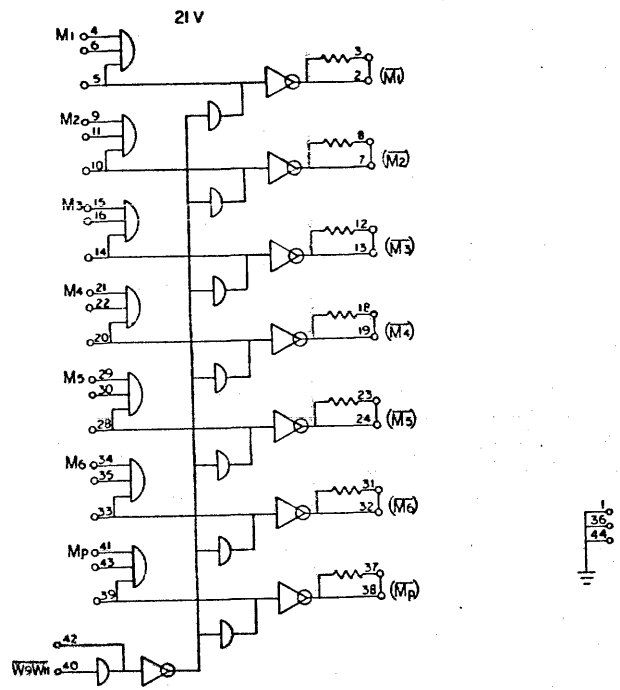

9348,
92483,9248,92481,92482
TAPE CONTROL
PAGE 33
E

NO REQ	DRAWING NO	DESCRIPTION	REFERENCE DESIGNATION	ITEM NO
		MATERIAL LIST		

NOTES UNLESS SPECIFIED

DRAWN 7/10/65
CHECK 7/18/65
APPR 7/18/65

SDS
SCIENTIFIC DATA SYSTEMS
SANTA MONICA, CALIFORNIA

TITLE
DIAGRAM LOGIC
MAG TAPE CONTROL UNIT

MODEL NO 9248

SIZE D | DWG NO 103257 | REVISION E

SCALE | DO NOT SCALE DRAWING | SHEET 33

103257 E

Change	Reason
From A through D logic revision levels no changes were made.	
	EO 103403N EO 107514E (92483 only)
On E revision logic $\overline{C17}$ C20 was added to gate ($\overline{C12}$) and ($\overline{C14}$) signals.	To reduce noise between master control unit and slaves by keeping Cs quiet, except during Mag Tape EOM's and SKS's.

REV	DESCRIPTION	CHK	DATE	APPROVED
A	REL TO MFG			
D	SEE REV EO			
E	SEE REV EO			

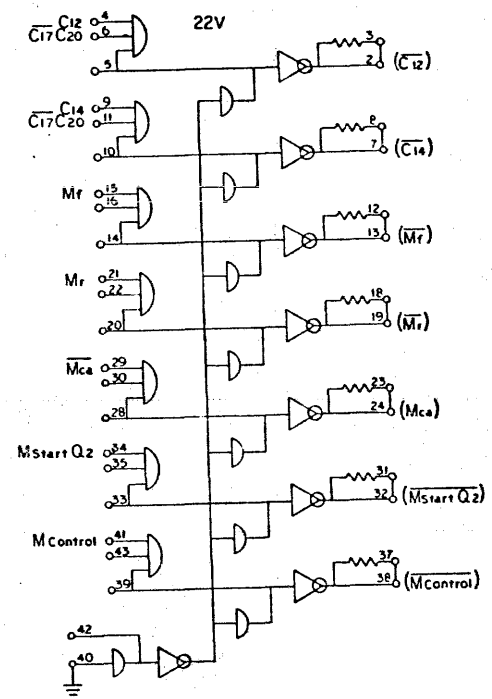

9348
92483,9248,92481,92482
TAPE CONTROL
PAGE 34
E

NO REQ	DRAWING NO	DESCRIPTION	REFERENCE DESIGNATION	OPTIONS

MATERIAL LIST

NOTES UNLESS SPECIFIED

DRAWN		
CHECK		
APPR		

SDS

TITLE
DIAGRAM, LOGIC,
MAG TAPE CONTROL UNIT

MODEL NO 9248

NEXT ASSY

SIZE D DWG NO 103257 E

SCALE DO NOT SCALE DRAWING SHEET 34 OF 44

103257 E

REV	DESCRIPTION	DATE	APPROVED
A	REL TO MFG		
D	SEE REV E.O.		
E	SEE REV EO		

103257 E

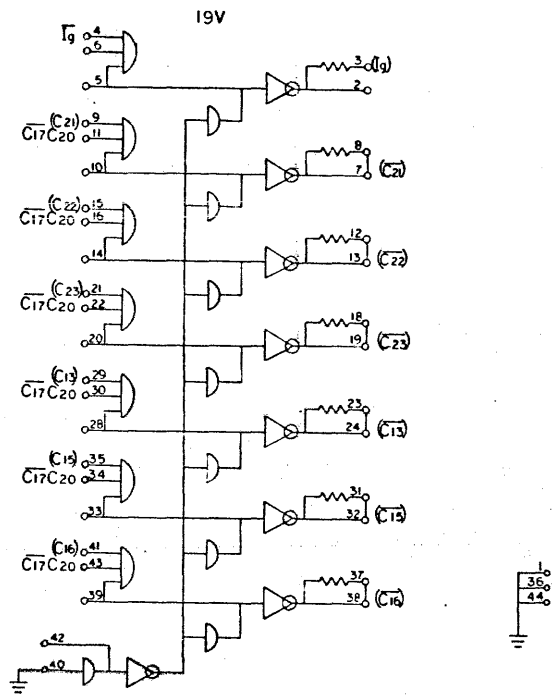

9348,
92483,9248,92481,92482
TAPE CONTROL
PAGE 35
E

NO REQ	DRAWING NO	DESCRIPTION	REFERENCE DESIGNATION	ITEM NO

MATERIAL LIST

NOTES UNLESS SPECIFIED

DRAWN	[illegible]	7/1/63
CHECK	[illegible]	7/8/63
APPR	[illegible]	7/12/63

SDS SCIENTIFIC DATA SYSTEMS

TITLE DIAGRAM, LOGIC, MAG TAPE CONTROL UNIT

MODEL NO 9248

NEXT ASSY

SIZE D DWG NO 103257 E

SCALE DO NOT SCALE DRAWING SHEET 35 OF 40

103257 E

Change	Reason
From A to C logic revision gating for (Mtg) signal changed. 103257A 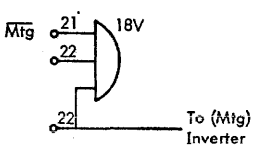 103257C, D & E 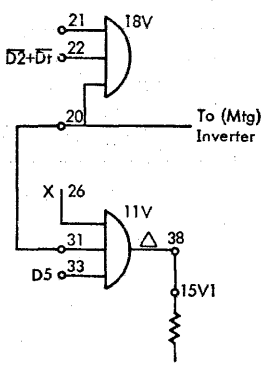 	EO 103403D See page 30 Addendum Sheet for reason.

REVISIONS			103257	E
REV	DESCRIPTION			
A	REL TO MFG			
C	SEE REV. E.O.			
D	SEE REV E.O.			
E	SEE REV EO			

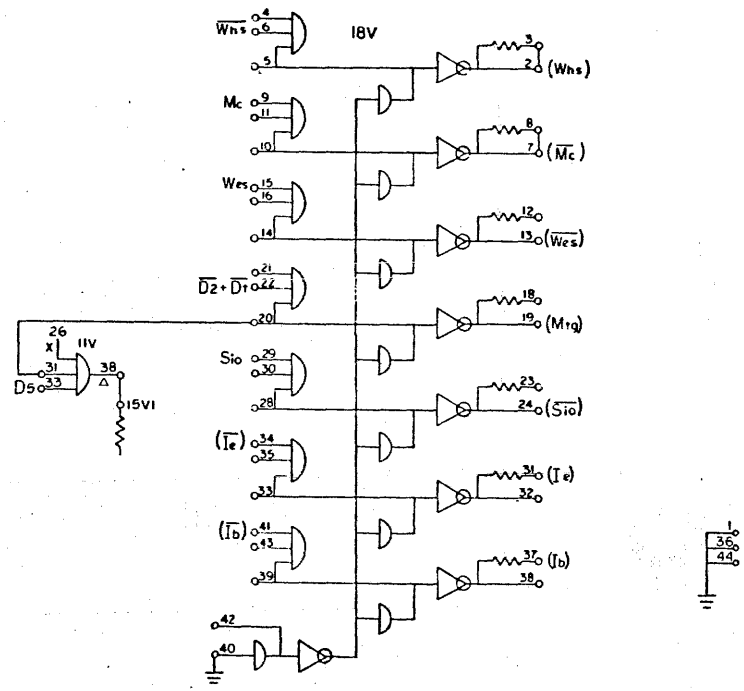

9348,
92483.9248 92481,92482
TAPE CONTROL
PAGE 36
E

NO. REQ	DRAWING NO	DESCRIPTION	REFERENCE DESIGNATION	ITEM NO.
		MATERIAL LIST		

NOTES UNLESS SPECIFIED

DRAWN		
CHECK		
APPR		

SDS SCIENTIFIC DATA SYSTEMS

TITLE DIAGRAM, LOGIC, MAG TAPE CONTROL UNIT

MODEL NO 9248

NEXT ASSY

SIZE D DWG NO 103257 E

SCALE DO NOT SCALE DRAWING SHEET

103257 E

REV	REVISIONS	DATE	APPROVED
A	REL TO MFG		
D	SEE REV E.O.		
E	SEE REV EO		

103257 E

	1	2	3	4	5	6	7	8	9	10	11	12	13	14	15	16	17	18	19	20	21	22	23	24	25	
K	FH17	OX13	OX13	GC10	FH17	IC10	BH10	FH15	OX14	GH10	GH10	IC12	FH15	FH15	FH17	FC17	GH10	GH10	FH17	FH7	IC10	GC10	GC10	GH11	IK52	K
V	CX13 [2] [1]	OX14 [2] [1]	CX13 [1]	OX13 [1]	CK52 [4]	DX13	SK59	BC10	IC12	BH11	BC10	IH12	GC10	IH12	BC10	IH12	IC12	AX14	AX14	AX14	AX14	AX14	AX14	P43	P41	V

[1] NOT USED ON 92481 [2] NOT USED ON 9248.

[4] CK55 USED 9348 CK56 USED ON 92483.

9348,
92483,
92482,
92481,
9248
TAPE CONTROL
PAGE 39
E

DRAWING NO	DESCRIPTION	REFERENCE DESIGNATION
	MATERIAL LIST	

NOTES UNLESS SPECIFIED

DRAWN		
CHECK		
APPR		

SDS

TITLE
DIAGRAM, LOGIC,
MAG TAPE CONTROL UNIT

MODEL NO 9248

NEXT ASSY

SIZE D DWG NO 103257 E

SCALE DO NOT SCALE DRAWING SHEET 39 OF

103257 E

REVISIONS 103257 E			
REV	DESCRIPTION	CHG	DATE	APPROVED
A	REL TO MFG		
D	SEE REV E.O.		
E	SEE REV E.O.		

MODULE LIST

ITEM	DESCRIPTION	MODEL	QTY 9248	92481	92482	92483	9348
1	CABLE DRIVER	AX14	6	6	6	6	6
2	AND/OR BUFFER AMP	BC10	3	3	3	3	3
3	AND/OR BUFFER AMP	BH10	1	1	1	1	1
4	OR GATE BUFFER AMP	BH11	1	1	1	1	1
5	CRYSTAL CLOCK GEN	CX13	1	–	2	2	2
6	COUNTER F.F.	FH15	3	3	3	3	3
7	UNIVERSAL F.F.	FH17	5	5	5	5	5
8	GATE EXPANDER	GH11	1	1	1	1	1
9	GATE EXPANDER	GC10	8	8	8	8	8
10	AND/OR INVERT.	IC10	2	2	2	2	2
11	AND INVERTER	IC12	4	4	4	4	4
12	AND INVERTER	IH12	2	2	2	2	2
13	ADDER MODULE	IK52	1	1	1	1	1
14	ONE SHOT MULT.	OX13	4	3	4	4	4
15	CLOCK & GAP DETECTOR	SK59	1	1	1	1	1
16	UNIVERSAL F.F.	FC17	1	1	1	1	1
17	ONE SHOT MULT.	OX14	1	1	2	2	2
18	CLOCK GEN	CK52	1	1	1	–	–
19	CLOCK GEN	CK55	–	–	–	–	1
20	CLOCK GEN	CK56	–	–	–	1	–

REPLACEMENT PARTS LIST

ITEM	DESCRIPTION	DESIGNATION	QTY	SUPPLIER CODE (SEE INDEX)
1	RESISTOR, 470 Ω ± 2%	(P40)R27 THRU R38	12	16, 17
2	INDUCTOR, MOLDED 220 μH ±5%	(P40)L1 THRU L26 (P41)L1 THRU L14	40	42, 90, 91
3	DIODE, SILICON SWITCHING IN914A	(P40)CR1 THRU CR11	11	4, 12, 13, 14
4	CONNECTOR SOLDERTAIL 47 CONTACT #1008-47	J(1R) THRU J(25R) J(1X) THRU J(25X)	50	82

ITEM	DESCRIPTION	CABLE LENGTH 11'	20'	30'	40'	DESIGNATION	QTY	SUPPLIER CODE (SEE INDEX)
5	RESISTOR	390 Ω ± 2%	330 Ω ± 2%	270 Ω ± 2%	220 Ω ± 2%	(P40)R1 THRU R26 (P41)R1 THRU R14	40	16, 17

9348,
92483, 9248, 92481, 92482
MAG TAPE CONTROL UNIT
PAGE 40
E

103257 E

DWG. REV.	DRAWING NO.	DESCRIPTION	REFERENCE DESIGNATION	ITEM NO.

MATERIAL LIST

NOTES UNLESS SPECIFIED

DRAWN / CHECK / APPR

SDS

TITLE
DIAGRAM, LOGIC
MAG TAPE CONTROL UNIT

MODEL NO. 9248

NEXT ASSY

SIZE D DWG. NO. 103257 REVISION LETTER E

SCALE DO NOT SCALE DRAWING SHEET

REVISIONS				
REV	DESCRIPTION	CHG	DATE	APPROVED
A	REL TO MFG			
B	SEE REV E.O.			
C	SEE REV E.O.			
D	SEE SEE E.O.			

NOTE:

THIS DWG APPLIES TO BOTH THE AMPEX (A) & POTTER (P) MAG TAPE UNITS. FOR SIMPLICITY ONLY 9246A AND/OR 9246P DESIGNATIONS ARE SHOWN ON INDIVIDUAL PAGES, 9246A IMPLIES 9246A, 9246IA, 92462A, & 9346A. 9246P IMPLIES 9246P, 9246IP, 92462P & 92463P. THE FOLLOWING CHART INDICATES THE EFFECTIVITY OF INDIVIDUAL PAGES.

PAGE	CHG	PAGE	CHG	PAGE	CHG	PAGE	CHG	PAGE	CHG
1	D								
2	D								
3	D								
4	D								
5	D								
6	D								
7	D								
8	D								
9	D								
10	D								
11	D								
12	D								
13	D								
14	D								
15	D								
16	D								
17	D								
18	D								
19	D								
20	D								
21	D								
22	D								
23	D								
24	D								
25	D								
26	D								
27	D								
28	D								
29	D								
30	D								
31	D								
32	D								
33	D								
34	D								
35	D								
36	D								
37	D								
38	D								
39	D								

NOTES:
1. REV LETTERS LISTED INDICATE STATUS OF EACH SHEET OF THIS MULTIPLE SHEET DRAWING.
2. CHECK INDIVIDUAL SHEETS FOR REVISION LETTER AGAINST THIS SHEET BEFORE USING THIS DRAWING.

REFERENCE DESIGNATIONS ARE ABBREVIATED. PREFIX THE DESIGNATION WITH UNIT NUMBER OR ASSEMBLY DESIGNATION OR BOTH. (MIL. STD. 168)

PAGE NO.	AMPEX ONLY	POTTER ONLY	BOTH	92463P VARIATIONS
1			X	
2	X			
3			X	
4			X	
5			X	
6			X	
7			X	
8			X	
9			X	
10			X	
11			X	
12			X	
13			X	X
14			X	
15			X	
16			X	
17			X	
18			X	
19			X	
20			X	
21			X	
22			X	
23			X	
24			X	
25			X	
26			X	X
27	X			
28	X			
29	X			
30	X			
31			X	
32			X	
33			X	
34	X			
35	X			
36		X		X
37		X		
38		X		
39		X		

9246A,9246P

MAG TAPE UNIT
PAGE 1
D

103258 D

NO. REQ	DRAWING NO.	DESCRIPTION	REFERENCE DESIGNATION	TYPE NO.
		MATERIAL LIST		

NOTES UNLESS SPECIFIED

DRAWN
CHECK
APPR. 7/10/63

SDS DIGITAL DATA SYSTEMS
7422 FATTENTH STREET, SANTA MONICA, CALIFORNIA

TITLE
DIAGRAM, LOGIC
MAG TAPE UNIT

MODEL NO. 9246

NEXT ASSY

SIZE D | DWG NO. 103258 | D

SCALE | DO NOT SCALE DRAWING | SHEET

REVISIONS 103258				
REV	DESCRIPTION	CHG	DATE	APPROVED
A	REL TO MFG			
-	ICE REV. E.O.			
D	SEE REV E.O			

NOTES: UNLESS OTHERWISE SPECIFIED

1. RECEPTACLES J1 & J2 ARE PROVIDED FOR CONNECTION TO THE READ & WRITE HEADS OF THE MAG TAPE UNIT.
2. RECEPTACLE J(1S) IS PROVIDED FOR P42 FROM CONTROL PANEL.
3. RECEPTACLE J(3S) IS PROVIDED FOR THE P44 TO P43 CABLE. P43 CONNECTS TO RECEPTACLE J(24V) OF THE MODEL 9248 CONTROL UNIT OR TO J(2S) OF A SECOND MODEL 9246.

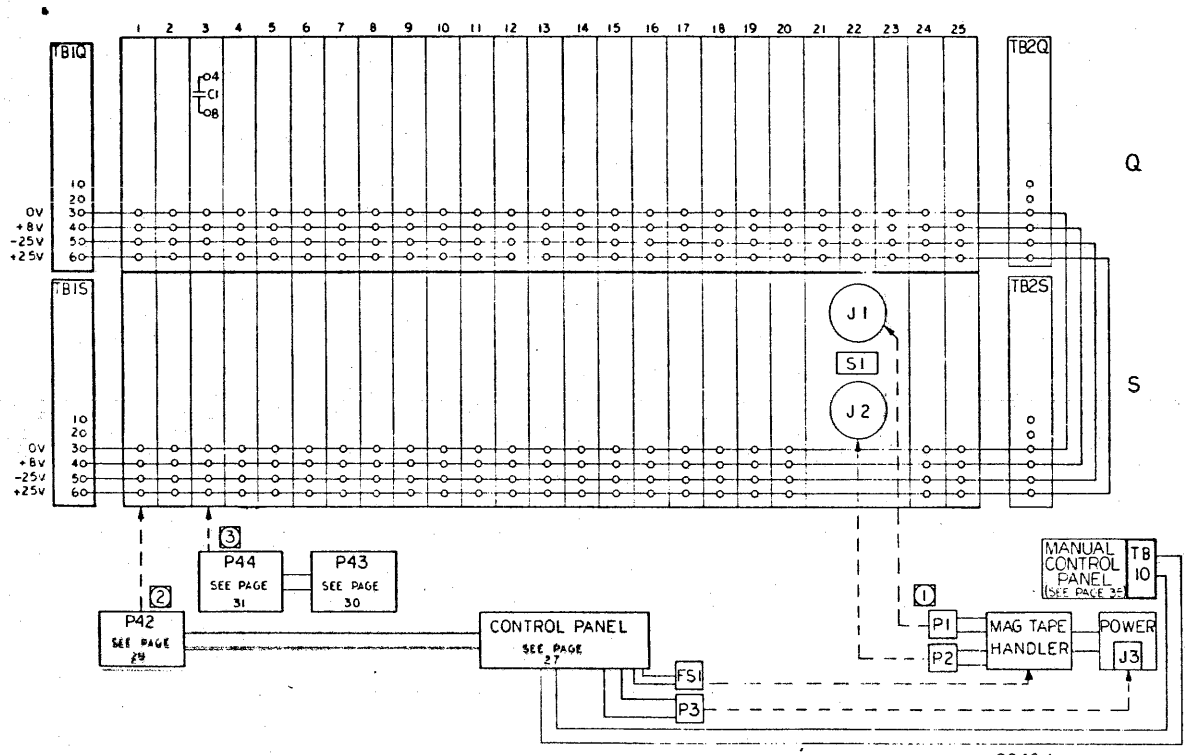

9246 A
MAG TAPE
PAGE 2
D

NO. REQ	DRAWING NO	DESCRIPTION	REFERENCE DESIGNATION	ITEM NO.
		MATERIAL LIST		

NOTES UNLESS SPECIFIED

DRAWN Jack 7/13/63
CHECK 7/16/63
APPR 7/16/63

SDS SCIENTIFIC DATA SYSTEMS

TITLE DIAGRAM, LOGIC MAG TAPE

MODEL NO 9246

NEXT ASSY

SIZE D DWG NO 103258 D

SCALE DO NOT SCALE DRAWING SHEET

103258 D

REV	DESCRIPTION	CHK	DATE	APPROVED
A	REL. TO MFG.			
C	SEE REV. E.O.			
D	SEE REV E.O.			

103258 D

9246 DIRECTORY

Ae	18
(Ae)	24
Aee	6
Aee	26
Aux. Contr. Panel	27
(Bor)	28
Bor	6
Bor	22
Bot	4
Bot Indicate	8
Ch1 Read	26
Ch2 Read	26
Ch3 Read	26
Ch4 Read	26
Ch5 Read	26
Ch6 Read	26
Ch7 Read	26
Ch1 Write	13
Ch2 Write	13
Ch3 Write	13
Ch4 Write	13
Ch5 Write	13
Ch6 Write	13
Ch7 Write	13
C12	20
C13	20
C14	20
CT4	20
C15	20
CT5	20
C16	20
CT6	20
C21	22
CT1	22
C22	22
CT2	22
C23	22
CT3	22
(Da)	24
(Dbl)	24
(Dr)	24
Debt	6
Dr	6
Dr	6
(Eor)	28
Eor	22
Eor	22
Eor + Boe	22
Eor Bor	19
Eot	4
Eot Indicate	6
File Protect Indicate	8
Forward Actuate	13
(Ib)	23
(Ia)	23
K1 Set	8
K2 Set	8
Ma	4
Mad	22
Mad	22
(Mad)	24
Ma Mf	14
Ma Mr	19
Ma Mr + Mb	19
Ma Test	19
Ma Test*	19
Ma Test	19
Mb	4
Mc	6
Mca	21
M Control	20
Mf	21
Mp	21
Mpa	5
Mpt	11
Mpa	13
Mr	21
Mra	11
Mra	6
M Start Of	20
Ms	6
M1	21
M2	21
M3	21
M4	21
M5	21
Mf	21
M1a	9
M2a	9
M3a	9
M4a	10
M5a	10
M6a	10
M1t	11
M2t	11
M3t	12
M4t	12
M5t	12
M6t	12
M1a	13
M2a	13
M3a	13
M4a	13
M5a	13
M6a	13
Ready	6
(Read)	6
Read, Indicate	8
Reverse Actuate	13
Rpa	18, 19
(Rpa)	25
(Rpa)	26
Rpaf	18
Rpar	18
Rpy	26
Rpz	26
R1a	16, 17, 19
R2a	16, 17, 19
R3a	16, 17, 19
R4a	14, 15, 19
R5a	14, 15, 19
R6a	14, 15, 19
(RTa)	25
(RTa)	25
(RTa)	25
(RTa)	25
(RTa)	25
(RTa)	25
(R1a)	21
(R2a)	21
(R3a)	21
(R4a)	21
(R5a)	21
(R6a)	21
(R1a)	21
(R1a)	21
R1af	14
R2af	14
R3af	14
R4af	14
R5af	14
R6af	14
R1ar	15
R2ar	15
R3ar	15
R4ar	15
R5ar	15
R6ar	15
R1y	26
R2y	26
R3y	26
R4y	26
R5y	26
R6y	26
R1z	26
R2z	26
R3z	26
R4z	26
R5z	26
R6z	26
(Slot)	23
[Slot]	7
Test	13
Test	13
Tha	26
Thd	26
Unit Select	6
Write Activate	13
W1 Will	21
W2 Will	21

9246A
9246P
MAG TAPE UNIT
PAGE 3
D

NO REQ	DRAWING NO	DESCRIPTION	REFERENCE DESIGNATION	PTO NO

MATERIAL LIST

NOTES UNLESS SPECIFIED

1. TOLERANCES .XX ± .005 .XXX ± .010 ANGULAR ± 1/2°
2. BREAK ALL SHARP EDGES AND CORNERS
3. MACH SURFACES 7
4. ALL DIM IN INCHES

DRAWN
CHECK
APPR

SDS SCIENTIFIC DATA SYSTEMS
1542 CAMPUS STREET, SANTA MONICA, CALIFORNIA

TITLE
DIAGRAM, LOGIC, MAG TAPE UNIT

MODEL NO 9246
NEXT ASSY

SIZE D
DWG NO 103258
D

SCALE
DO NOT SCALE DRAWING
SHEET 3

REV	DESCRIPTION	CHG	DATE	APPROVALS
A	REL TO MFG			
B	SEE REV E.O.			
C	SEE REV. E.O.			
D	SEE REV E.O.			

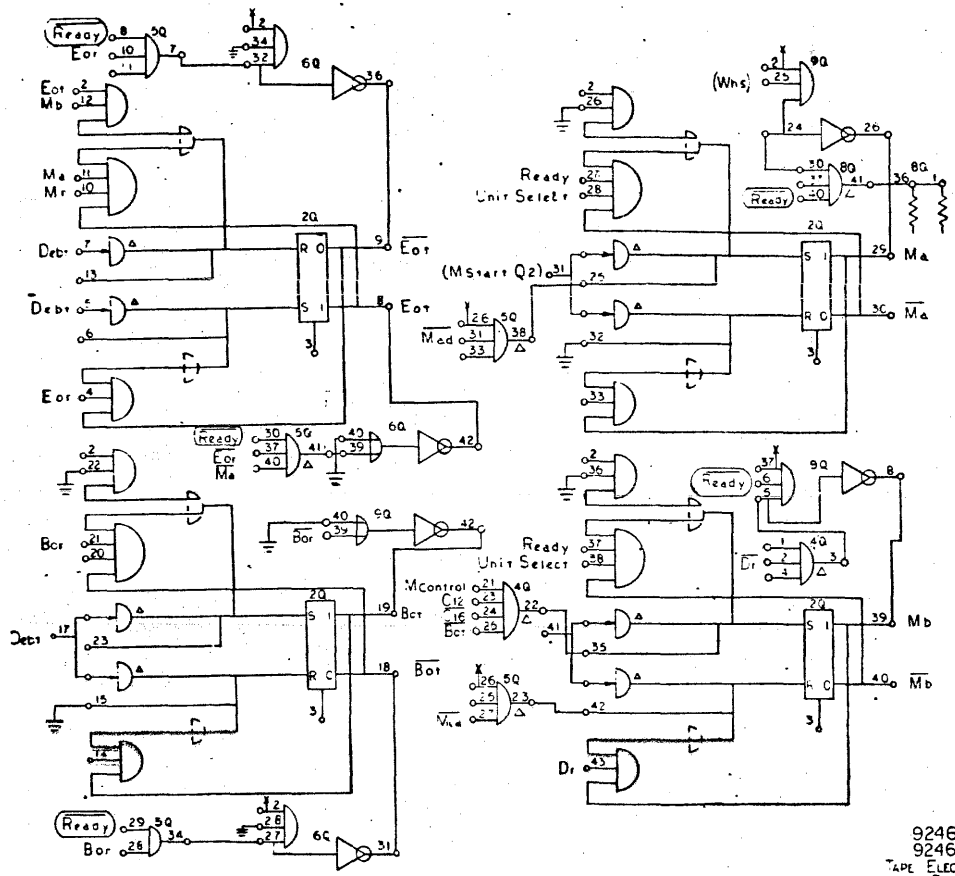

9246A
9246P
TAPE ELECTRONICS
PAGE 4
D

NO REQ	DRAWING NO	DESCRIPTION	MATERIAL DESIGNATION

NOTES UNLESS SPECIFIED

DRAWN
CHECK
APPR

SDS

DIAGRAM, LOGIC,
MAG TAPE UNIT

MODEL NO 9246

NEXT ASSY

SIZE D | DWG NO 103258 | D

103258 D

REV	DESCRIPTION	CHK	DATE	APPROVED
A	REL. TO MFG.			
C	SEE REV. E.O.			
D	SEE REV E.O.			

103258 D

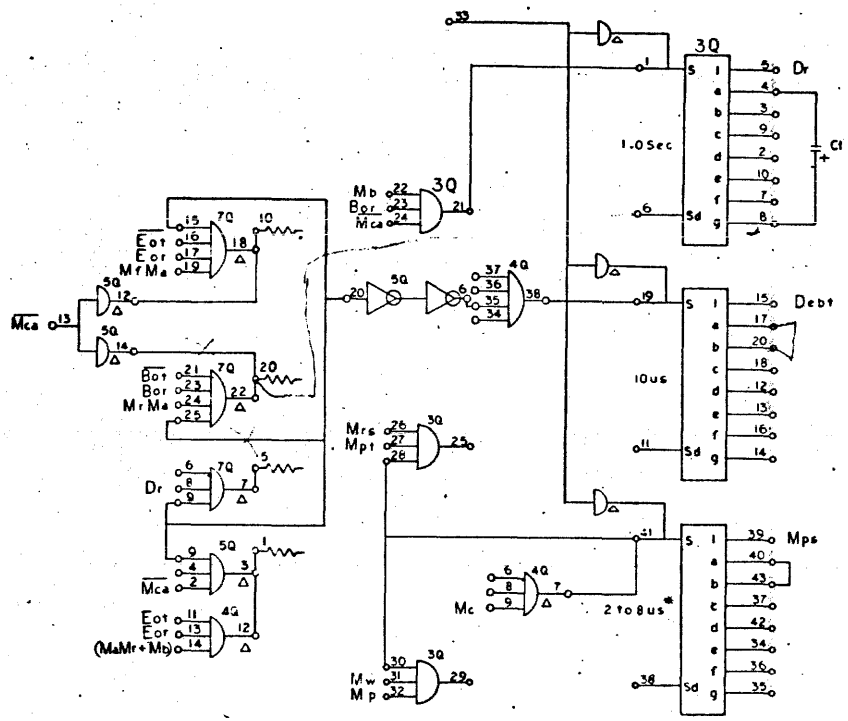

* SEE CALIBRATION PROCEDURE

9246A
9246P
TAPE ELECTRONICS
PAGE 5
D

DRAWING NO	DESCRIPTION	DESIGNATION

NOTES UNLESS SPECIFIED

DRAWN		7/19/63
CHECK	CJB	7/17/63
APPR	WIF	7/19/63

SDS

DIAGRAM, LOGIC, MAG TAPE UNIT

MODEL NO 9246

NEXT ASSY

D 103258 D

SHEET 5

103258 D

REV	DESCRIPTION	DATE	APPROVED
A	REL TO MFG		
C	SEE REV. E.O.		
D	SEE REV E.O.		

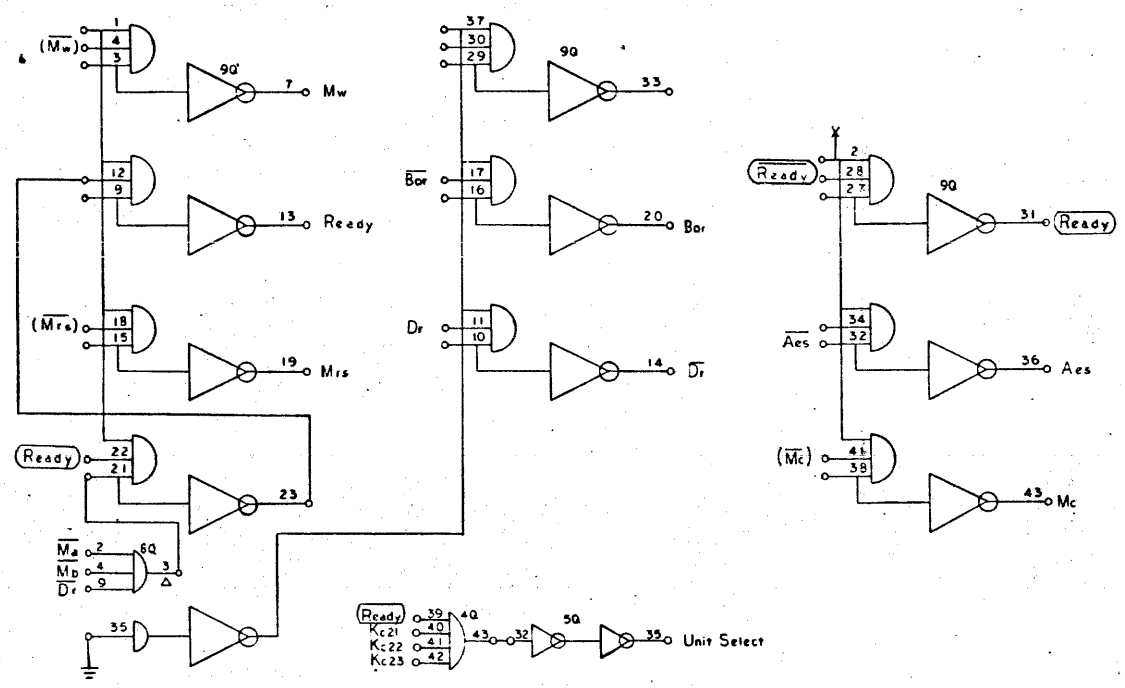

9246A
9246P
TAPE ELECTRONICS
PAGE 6
D

NO REQ	DRAWING NO	DESCRIPTION	REFERENCE DESIGNATION

MATERIAL LIST

NOTES UNLESS SPECIFIED

DRAWN
CHECK
APPD

SDS

TITLE
DIAGRAM, LOGIC,
MAG TAPE UNIT

MODEL NO 9246

SIZE D DWG NO 103258 D

SCALE DO NOT SCALE DRAWING SHEET 6

103258 D

REV	DESCRIPTION	DATE	APPROVED
A	REL TO MFG		
C	SEE REV. E.O.		
D	SEE REV E.O.		

103258 D

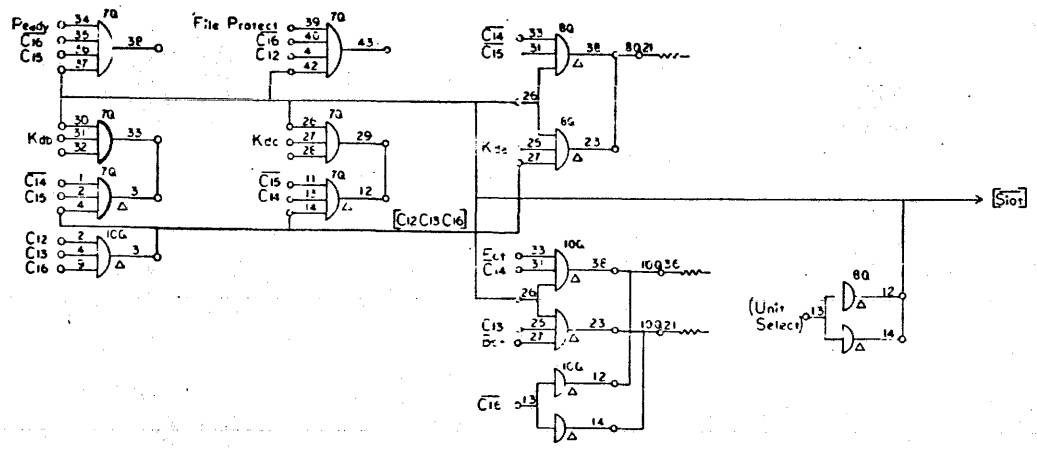

9-16A
9246P
TAPE ELECTRONICS
PAGE 7
D

NO. REQ	DRAWING NO	DESCRIPTION	REFERENCE DESIGNATION	ITEM NO

MATERIAL LIST

NOTES UNLESS SPECIFIED

SDS

DRAWN
CHECK
APPR

TITLE: DIAGRAM, LOGIC, MAG TAPE UNIT

MODEL NO: 9246

NEXT ASSY

SIZE: D | DWG NO: 103258 | D

SCALE | DO NOT SCALE DRAWING | SHEET

103258 D1

REV	DESCRIPTION	CHG	DATE	APPROVED
A	REL TO MFG			
C	SEE REV. E.O.			
D	SEE REV E.O.			

C3258 D

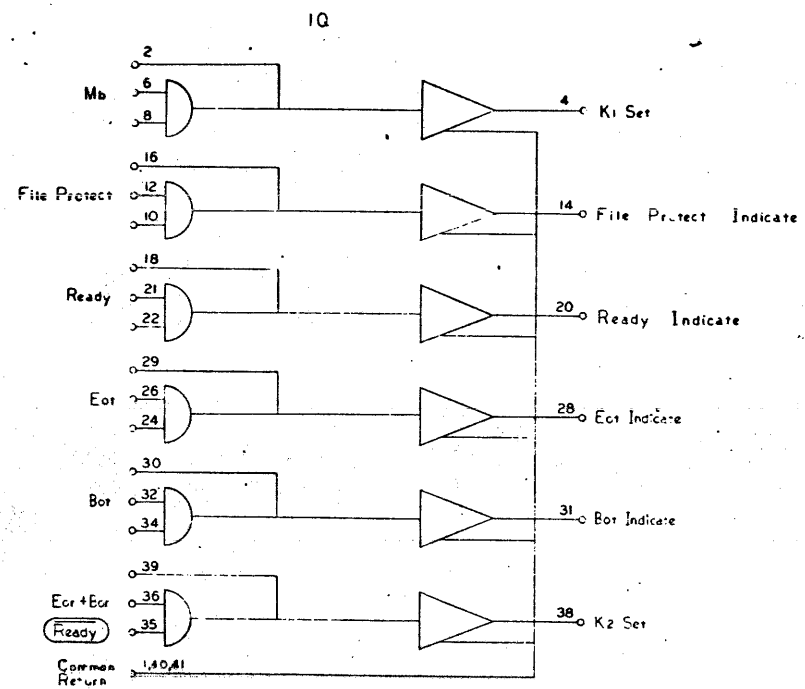

9246A
9246P
TAPE ELECTRONICS
PAGE 8
D

C3258 D

DRAWING NO	DESCRIPTION	MATERIAL DESIGNATION
NOTES UNLESS SPECIFIED		SDS
MODEL NO 9246		DIAGRAM, LOGIC, MAG TAPE UNIT
		SIZE D — 10.3258 — D

REV	REVISIONS DESCRIPTION	DATE	APPROVED
A	REL TO MFG		
C	SEE REV. E.O.		
D	SEE REV E.O.		

103258 D

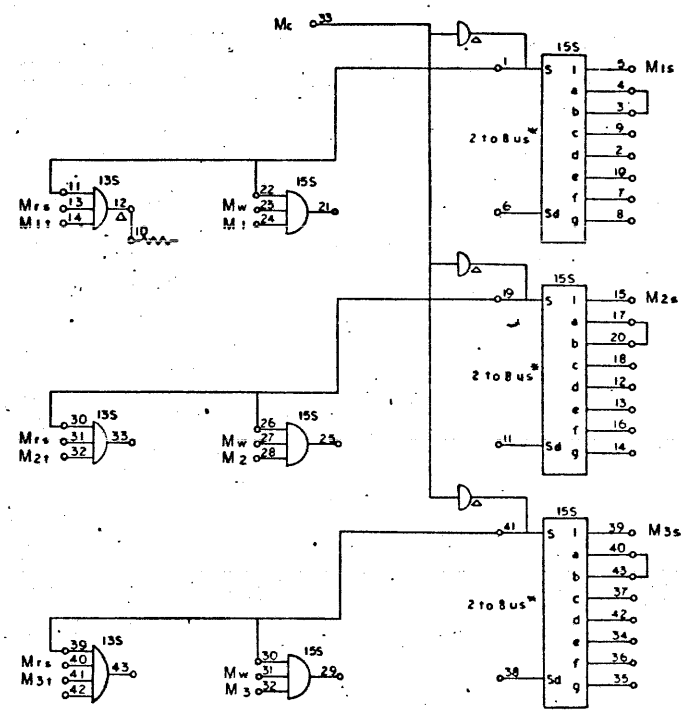

9246A
9246P
TAPE ELECTRONICS
PAGE 9
D

NO REQ	DRAWING NO	DESCRIPTION	REFERENCE DESIGNATION	SPEC NO

MATERIAL LIST

NOTES UNLESS SPECIFIED

DRAWN		7/1/64
CHECK		7/1/63
APPR		7/1/63

SDS

TITLE: DIAGRAM, LOGIC, MAG TAPE UNIT

MODEL NO: 9246

NEXT ASSY:

SIZE D | DWG NO 103258 | D

SCALE | DO NOT SCALE DRAWING | SHEET 9

REVISIONS				103258
REV	DESCRIPTION	LTR	DATE	APPROVED
A	REL TO MFG			
C	SEE REV. E.O.			
D	SEE REV E.O.			

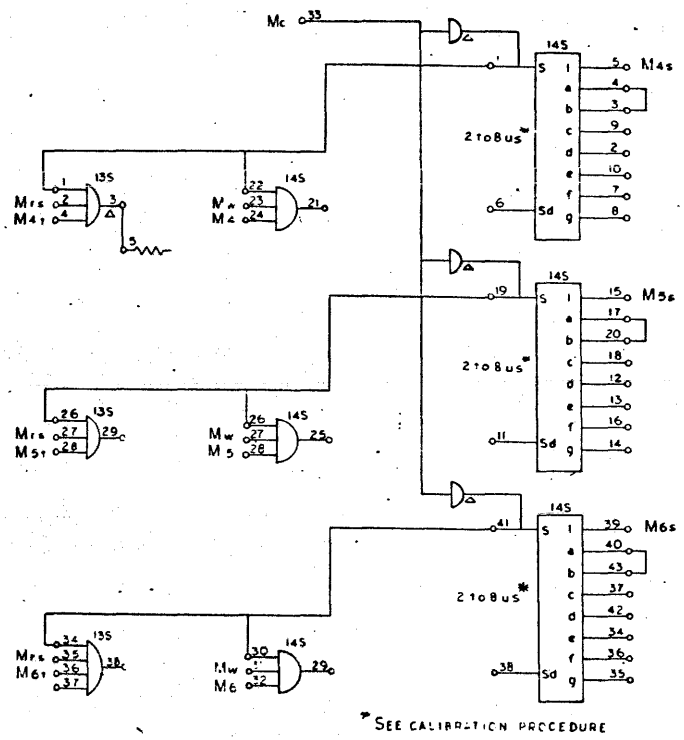

*SEE CALIBRATION PROCEDURE

9246A
9246P.
TAPE ELECTRONICS
PAGE 10
D

NO REQ	DRAWING NO	DESCRIPTION	REFERENCE DESIGNATION	ITEM NO
		MATERIAL LIST		

NOTES UNLESS SPECIFIED

DRAWN		
CHECK		
APPD		

SDS

TITLE: DIAGRAM, LOGIC, MAG TAPE UNIT

MODEL NO: 9246

NEXT ASSY

SIZE: D | DWG NO: 103258 | D

SCALE | DO NOT SCALE DRAWING | SHEET 10

103258 D

REV	DESCRIPTION	CHG	DATE	APPROVED
A	REL TO MFG			
C	SEE REV. E.O.			
D	SEE REV E.O.			

103258 D

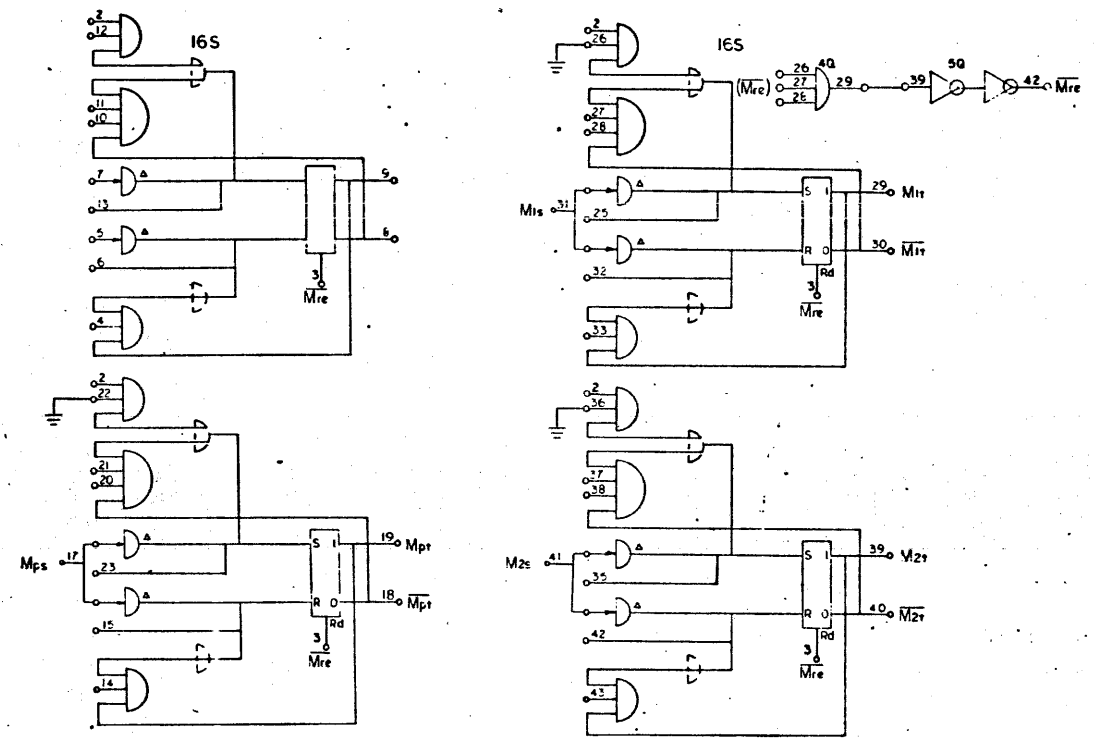

9246A
9246P
TAPE ELECTRONICS
PAGE 11
D

DRAWING NO	DESCRIPTION	REFERENCE DESIGNATION

MATERIAL LIST

NOTES UNLESS SPECIFIED

DRAWN
CHECK
APPD

SDS

TITLE
DIAGRAM, LOGIC,
MAG TAPE UNIT

MODEL NO 9246

SIZE D DWG NO 103258 D

REV	DESCRIPTION	LTR	DATE	APPROVED
A	REL TO MFG			
C	SEE REV. E.O.			
D	SEE REV E.O.			

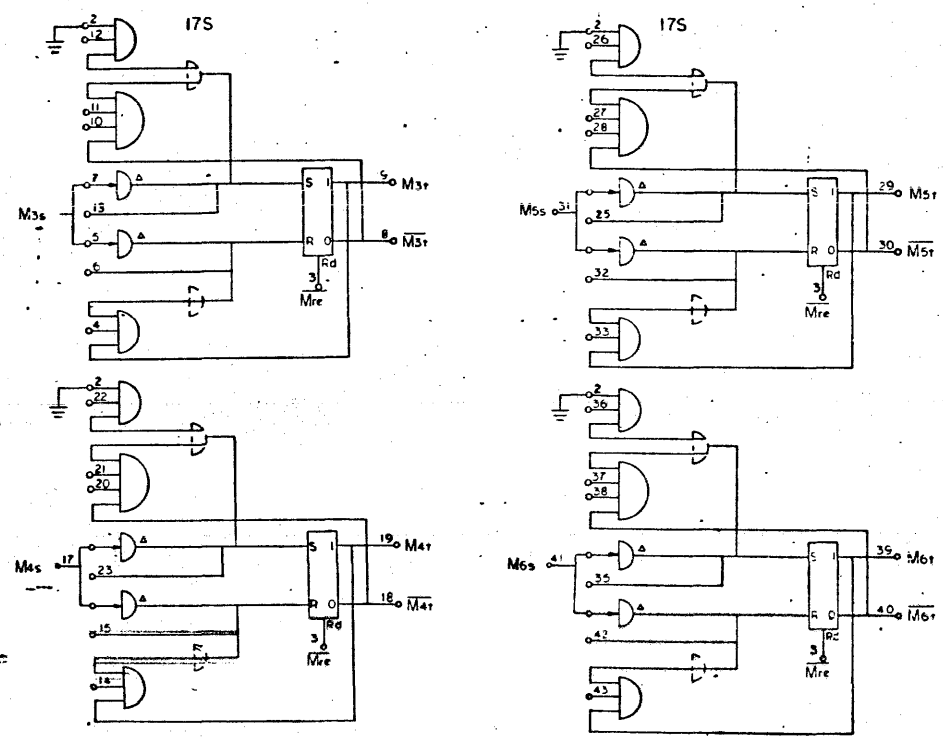

9246A
9246P
TAPE ELECTRONICS
PAGE 12
D

DWG SIZE	DRAWING NO.	DESCRIPTION	REFERENCE DESIGNATION	ITEM NO.
	MATERIAL LIST			

NOTES UNLESS SPECIFIED

DRAWN
CHECK
APPR

SDS

TITLE
DIAGRAM, LOGIC,
MAG TAPE UNIT

MODEL NO 9246

NEXT ASSY

SIZE D DWG NO 103258 D

SCALE DO NOT SCALE DRAWING SHEET 12

103258 D

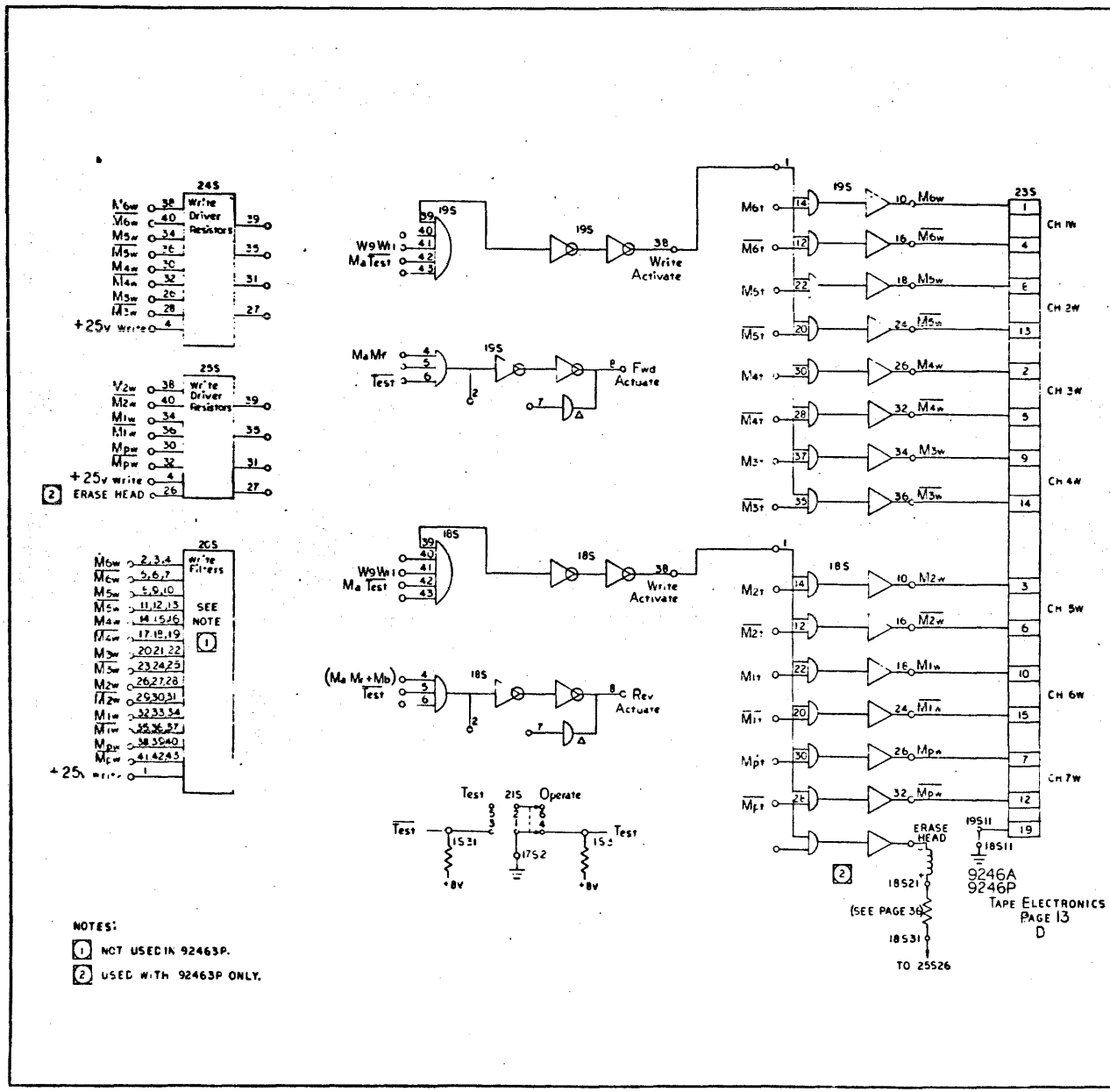

NOTES:

1. NOT USED IN 92463P.
2. USED WITH 92463P ONLY.

REVISIONS			103258 D
REV	DESCRIPTION		
A	REL TO MFG		
C	SEE REV. E.O.		
D	SEE REV E.O.		

DRAWING NO	DESCRIPTION	REFERENCE DESIGNATION

MATERIAL LIST

NOTES UNLESS SPECIFIED

SDS

TITLE: DIAGRAM, LOGIC, MAG TAPE UNIT

MODEL NO: 9246

NEXT ASSY:

SIZE D — DWG NO 103258 — D

SCALE — DO NOT SCALE DRAWING — SHEET 13

103258 D

REV	DESCRIPTION	LTR	DATE	APPROVED
A	REL TO MFG			
C	SEE REV. E.O.			
D	SEE REV E.O.			

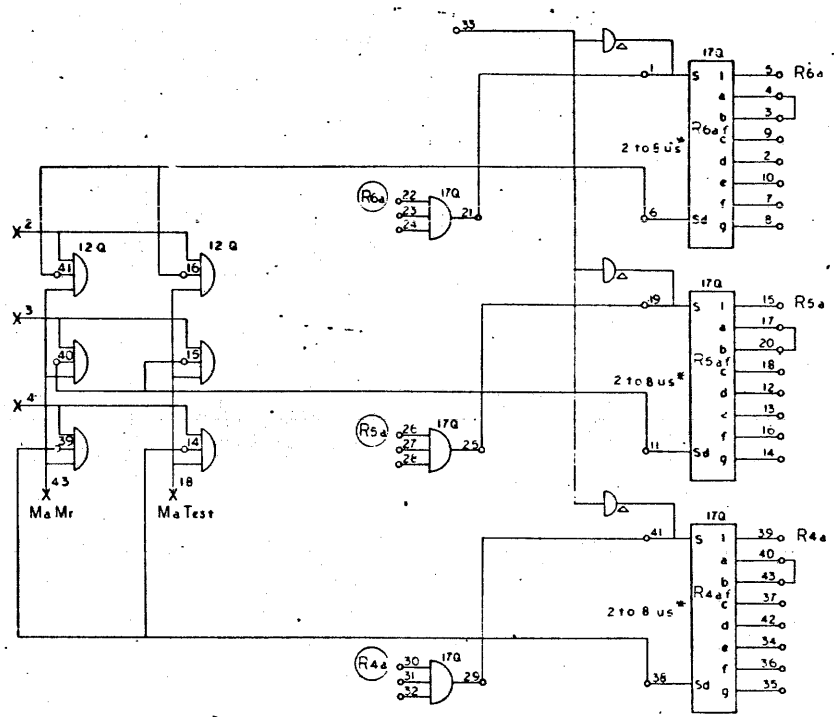

* SEE CALIBRATION PROCEDURE

9246A
9246P
TAPE ELECTRONICS
PAGE 14
D

NO REQ	DRAWING NO	DESCRIPTION	REFERENCE DESIGNATION	ITEM NO

MATERIAL LIST

NOTES UNLESS SPECIFIED

DRAWN
CHECK
APPR

SDS SCIENTIFIC DATA SYSTEMS

TITLE DIAGRAM, LOGIC, MAG TAPE UNIT

MODEL NO 9246

NEXT ASSY

SIZE D DWG NO 103258 D

SCALE DO NOT SCALE DRAWING SHEET

103258 D

REVISIONS				103258 D
REV	DESCRIPTION	CHK	DATE	APPROVED
A	REL TO MFG			
C	SEE REV. E.O.			
D	SEE REV E.O.			

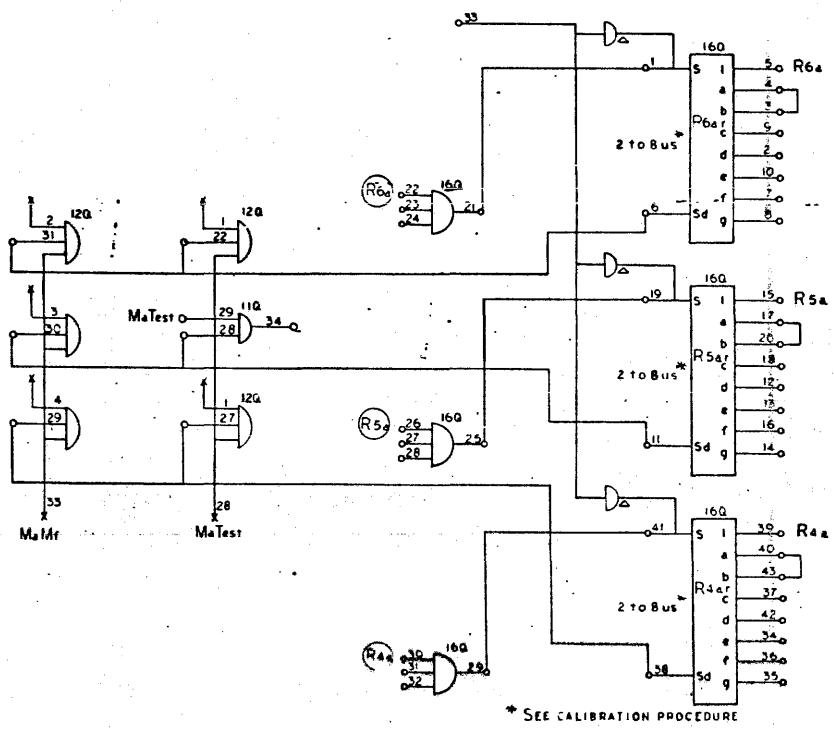

9246A
9246P
TAPE ELECTRONICS
PAGE 15
D

REQ	DRAWING NO	DESCRIPTION	REFERENCE DESIGNATION	APPR
		MATERIAL LIST		

NOTES UNLESS SPECIFIED

SDS

DIAGRAM, LOGIC, MAG TAPE UNIT

9246

D 103258 D

103258 D

REVISIONS				C3258 D
REV	DESCRIPTION	CHK	DATE	APPROVED
A	REL TO MFG.			
C	SEE REV. E.O.			
D	SEE REV. E.O.			

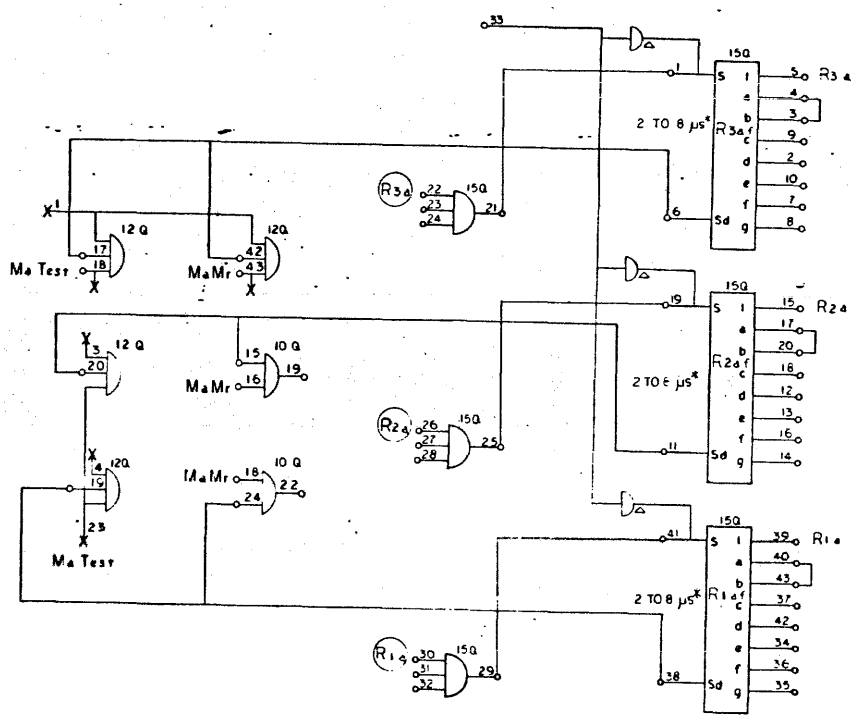

*SEE CALIBRATION PROCEDURE

9246A
9246P
TAPE ELECTRONICS
PAGE 16
D

DRAWING NO.	NEXT DESCRIPTION	REFERENCE DESIGNATION	
NOTES UNLESS OTHERWISE SPECIFIED	DRAWN		SDS
	CHK'D		DIAGRAM, LOGIC, MAG TAPE UNIT
	APPR		
MODEL NO. 9246	NEXT ASSY		D 103258 D

REV	DESCRIPTION	DATE
A	REL TO MFG	
C	SEE REV. E.O.	
D	SEE REV E.O.	

103258

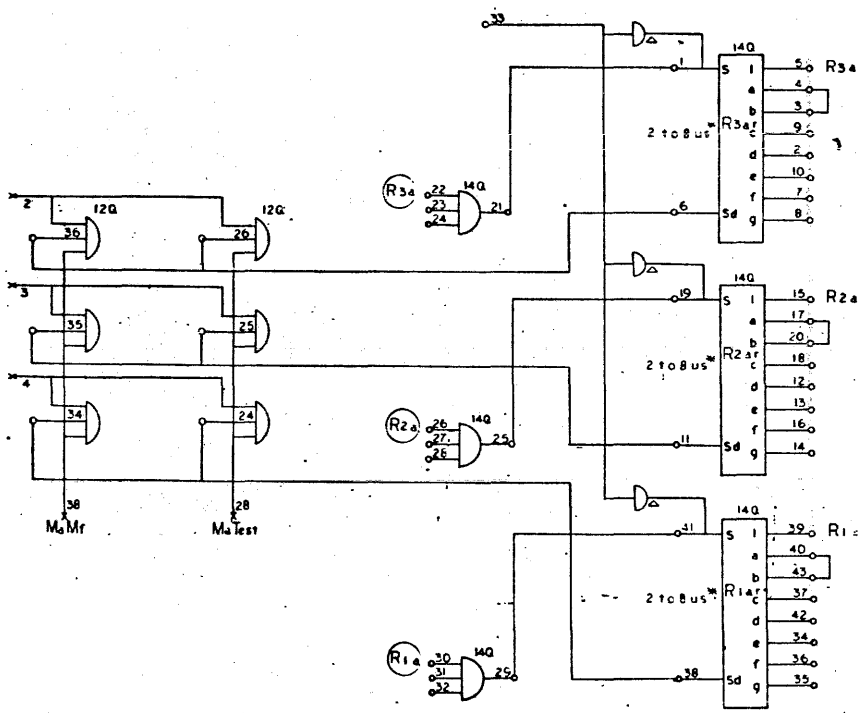

*SEE CALBRATION PROCEDURE

9246A
9246P
TAPE ELECTRONICS
PAGE 17
D

DRAWING NO.	DESCRIPTION	REFERENCE DESIGNATION

MATERIAL LIST

NOTES UNLESS SPECIFIED

DRAWN
CHECK
APPR

SDS

TITLE
DIAGRAM, LOGIC,
MAG TAPE UNIT

9246

NEXT ASSY

SIZE D DRAWING NO. 103258 D

SCALE DO NOT SCALE THIS DRAWING SHEET 17

103258 D1

REV	DESCRIPTION	CHK	DATE	APPROVED
A	REL TO MFG			
C	SEE REV. E.O.			
D	SEE REV E.O.			

C3258 D

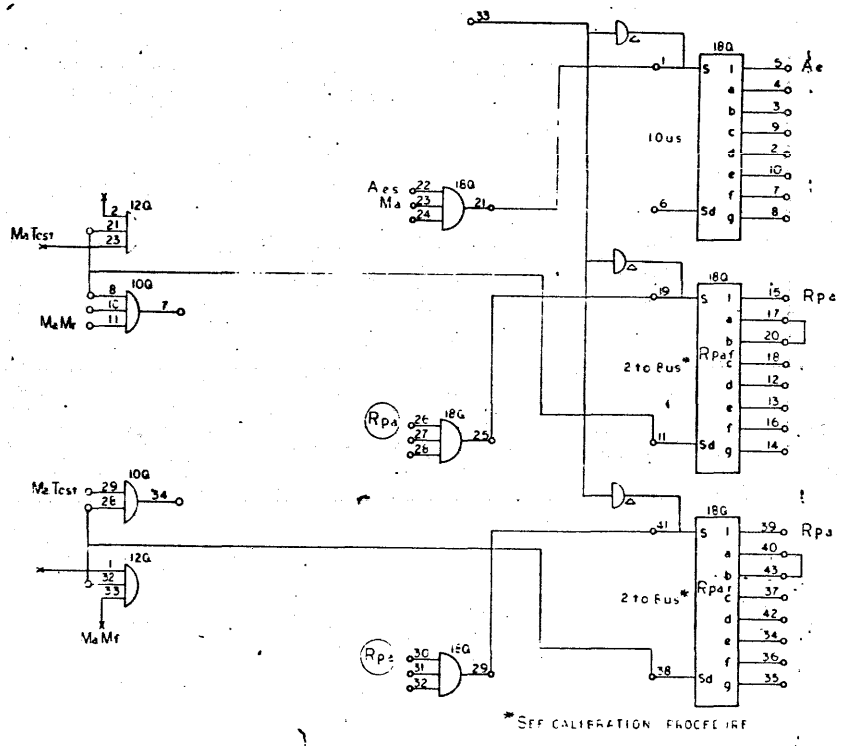

9246A
9246P
TAPE ELECTRONICS
PAGE 18
D

DRAWING NO	DESCRIPTION	REFERENCE DESIGNATION
		SDS
MODEL NO 9246		DIAGRAM, LOGIC, MAG TAPE UNIT
		D 103258 D

REVISIONS			103258 D
REV	DESCRIPTION	CHG	DATE / APPROVED
A	REL. TO MFG.		
C	SEE REV. E.O.		
D	SEE REV E.O.		

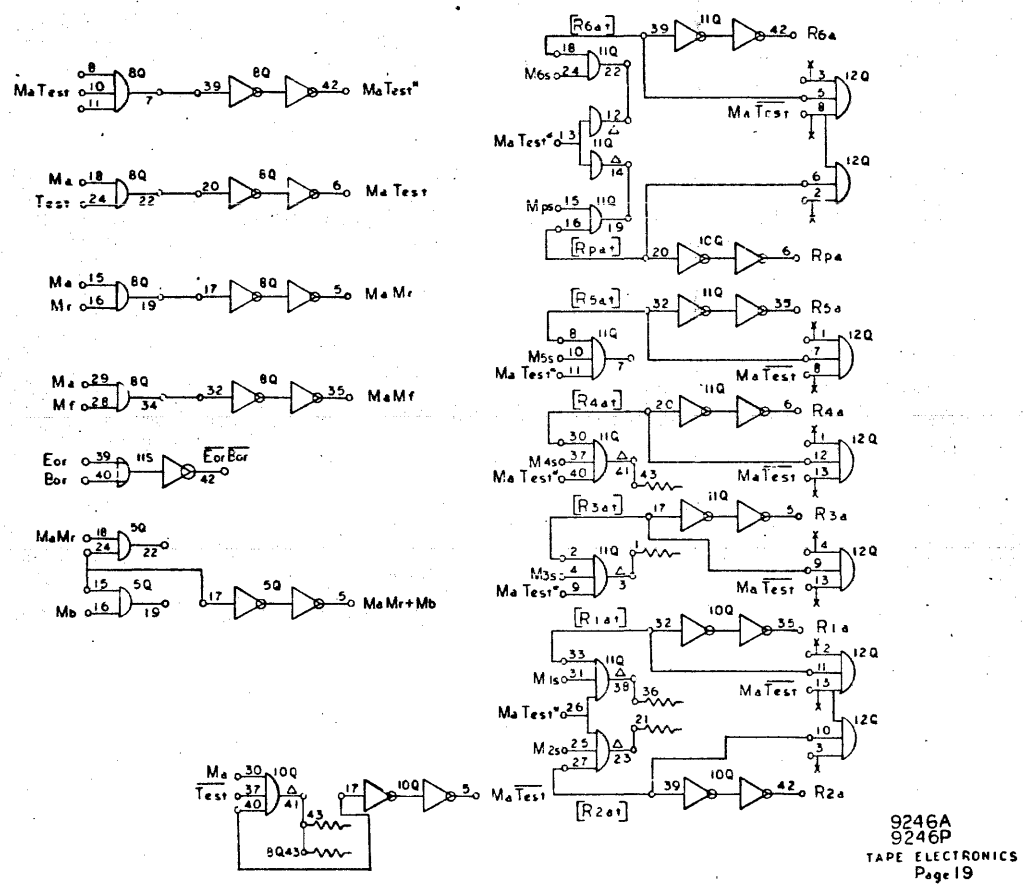

9246A
9246P
TAPE ELECTRONICS
Page 19
D

DRAWING NO.	DESCRIPTION	REFERENCE DESIGNATION

MATERIAL LIST

NOTES UNLESS SPECIFIED

DRAWN 7/9/63
CHECK 7/17/63
APPR 7/18/63

SDS

TITLE: DIAGRAM, LOGIC, MAG TAPE UNIT

MODEL NO. 9246

SIZE D DWG NO. 103258 D

SCALE — DO NOT SCALE DRAWING — SHEET 19

103258 D

REV	DESCRIPTION	DATE	APPROVED
A	REL. TO MFG		
C	SEE REV. E.O.		
D	SEE REV E.O.		

103258 D

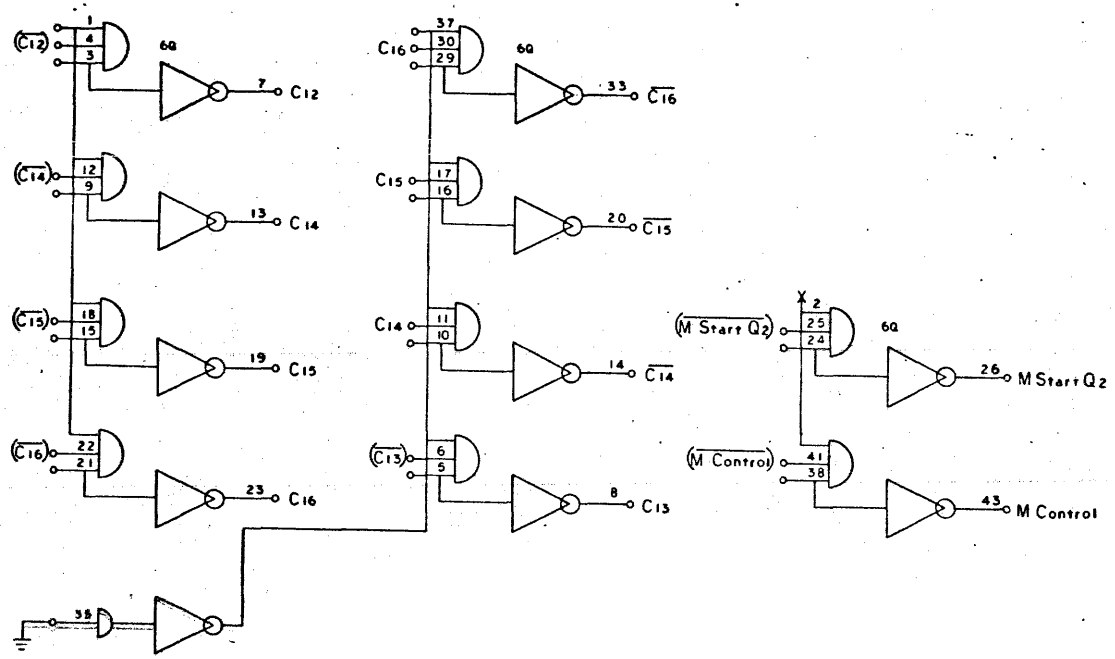

9246A
9246P

TAPE ELECTRONICS

PAGE 20
D

NO REQ	DRAWING NO	DESCRIPTION	REFERENCE DESIGNATION	STOCK NO
		MATERIAL LIST		

NOTES UNLESS SPECIFIED

DRAWN		
CHECK		7/17/63
APPR		7/19/63

SDS

TITLE: DIAGRAM, LOGIC, MAG TAPE UNIT

MODEL NO: 9246

SIZE: D

DWG NO: 103258

D

SCALE: DO NOT SCALE DRAWING

SHEET 20

REV	DESCRIPTION	BY	DATE	APPROVED
A	REL TO MFG			
C	SEE REV. E.O.			
D	SEE REV E.O.			

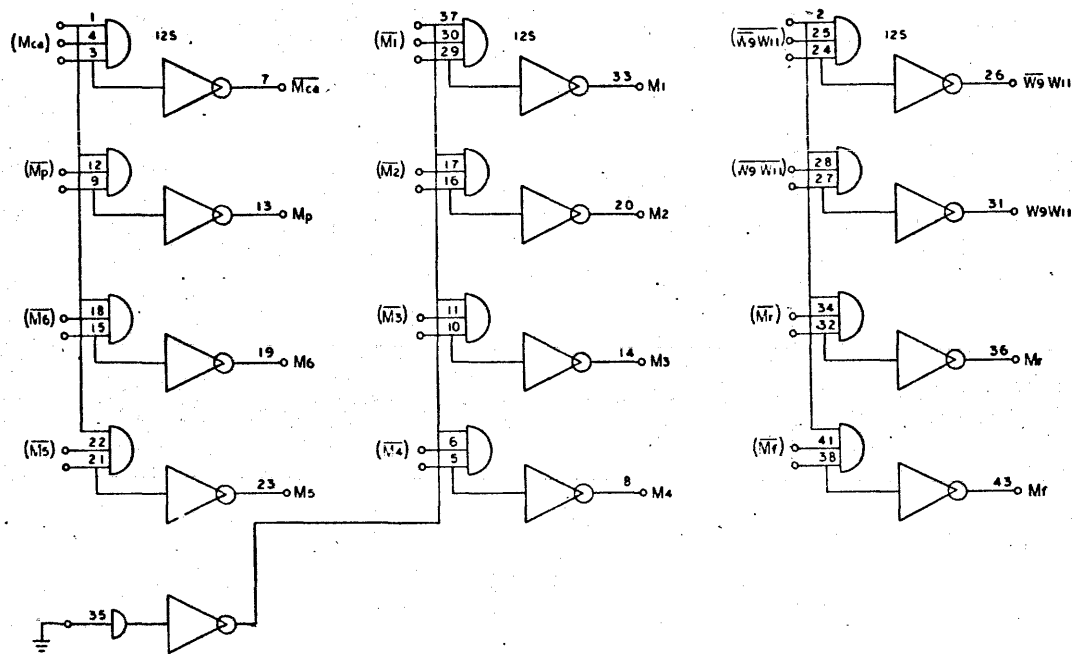

9246A
9246P
TAPE ELECTRONICS
PAGE 21
D

DWG SIZE	DRAWING NO.	DESCRIPTION	REFERENCE DESIGNATION	ITEM NO.
	MATERIAL LIST			

NOTED UNLESS SPECIFIED

DRAWN
CHECK 7/7/63
APPR. 7/9/63

SDS

TITLE
DIAGRAM, LOGIC,
MAG TAPE UNIT

MODEL NO. 9246

NEXT ASSY

SIZE D DWG NO. 103258 D

SCALE DO NOT SCALE DRAWING SHEET 1

103258 D

REV	DESCRIPTION	DATE	APPROVED
A	REL TO MFG		
C	SEE REV. E.O.		
D	SEE REV E.O.		

C3258 D

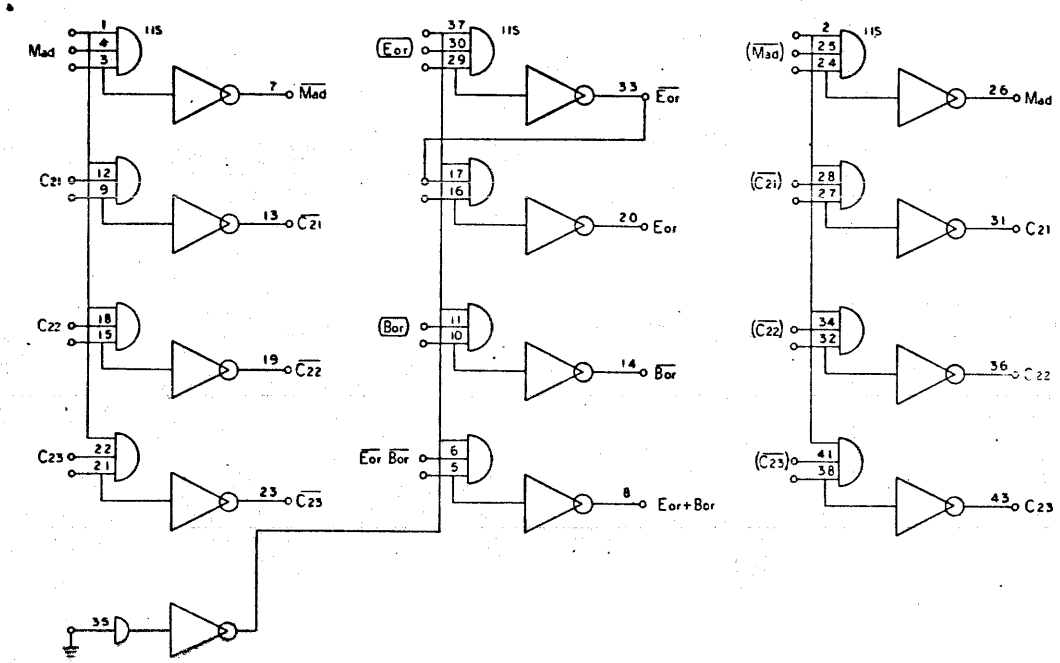

9246A
9246P
TAPE ELECTRONICS
PAGE 22
D

NO REQ	DRAWING NO	DESCRIPTION	REFERENCE DESIGNATION	ITEM REV

NOTES UNLESS SPECIFIED

DRAWN
CHECK
APPR

SDS

TITLE: DIAGRAM, LOGIC, MAG TAPE UNIT

MODEL NO 9246

NEXT ASSY

SIZE D | CODE IDENT NO 103258 | D

SCALE | SHEET

REVISIONS				103258 D
REV	DESCRIPTION	CHG	DATE	APPROVED
A	REL. TO MFG.			
B	SEE REV E.O.			
C	SEE REV. E.O.			
D	SEE REV E.O.			

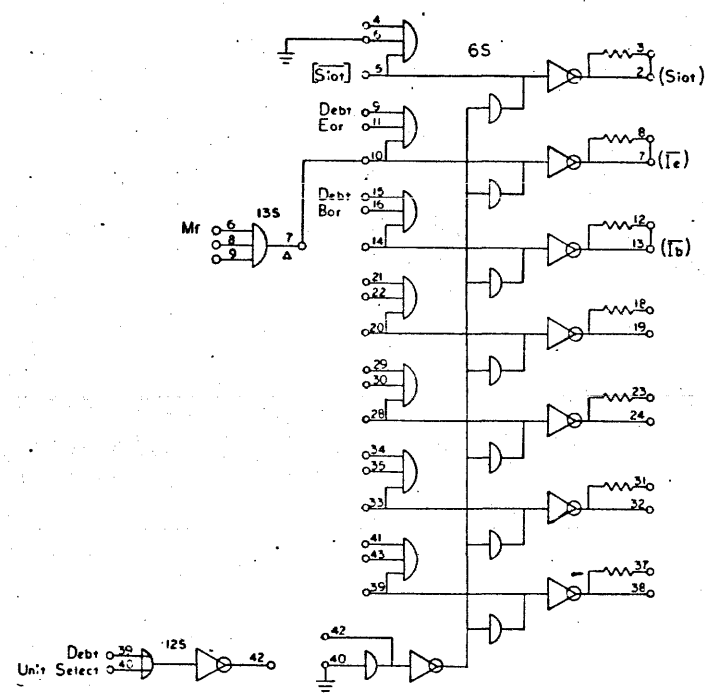

9246A
9246P
TAPE ELECTRONICS
PAGE 23
D

NO REQ	DRAWING NO	DESCRIPTION	REFERENCE DESIGNATION	OPTIONAL

MATERIAL LIST

NOTES UNLESS SPECIFIED

DRAWN		
CHECK		7/27/63
APPD		7/15/63

SDS

TITLE
DIAGRAM, LOGIC,
MAG TAPE UNIT

MODEL NO 9246

NEXT ASSY

SIZE D | DWG NO 103258 | D

SCALE | DO NOT SCALE DRAWING | SHEET 23

103258 D

REVISIONS				103258
REV	DESCRIPTION	CHG	DATE	APPROVED
A	REL TO MFG			
C	SEE REV. E.O.			
D	SEE REV E.O.			

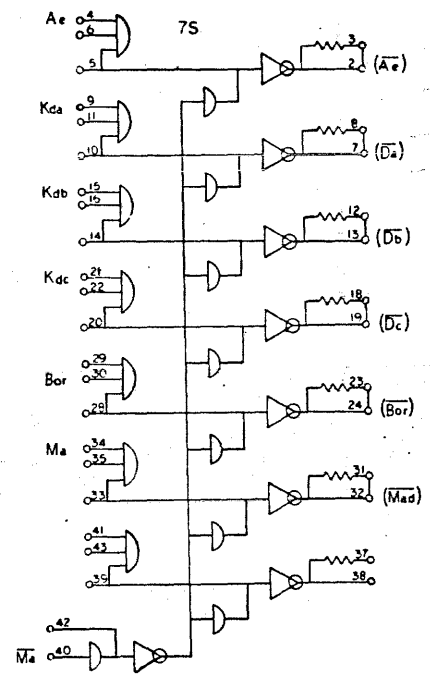

9246A
9246P
TAPE ELECTRONICS
PAGE 24
D

NO. REQ	DRAWING NO	DESCRIPTION	REFERENCE DESIGNATION	ITEM NO.
		MATERIAL LIST		

NOTES UNLESS SPECIFIED

DRAWN
CHECK
APPR

SDS

TITLE
DIAGRAM, LOGIC,
MAG TAPE UNIT

MODEL NO 9246

NEXT ASSY

SIZE D DWG NO 103258 D

SCALE DO NOT SCALE DRAWING SHEET 24

103258 D

REV	REVISIONS	
A	REL TO MFG	
C	SEE REV. E.O.	
D	SEE REV E.O.	

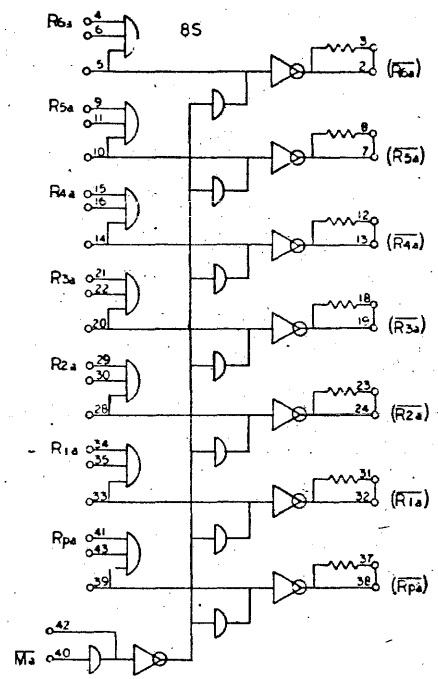

9246A
9246P
TAPE ELECTRONICS
PAGE 25
D

NO. REQ	DRAWING NO.	DESCRIPTION	REFERENCE DESIGNATION

MATERIAL LIST

NOTES UNLESS SPECIFIED

DRAWN 7/6/64
CHECK 7/7/63
APPD 7/8/63

SDS

TITLE DIAGRAM, LOGIC, MAG TAPE UNIT

MODEL NO 9246

NEXT ASSY

SIZE D DWG NO 103258 D

SCALE DO NOT SCALE DRAWING SHEET 5

103258 D

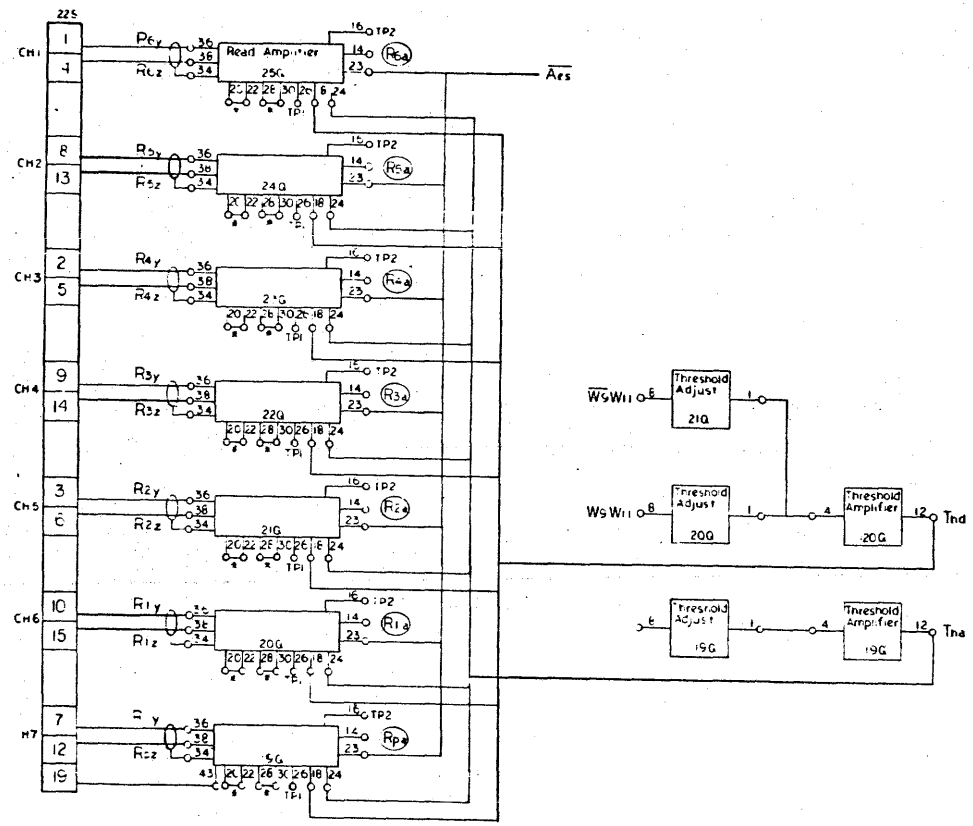

* LAYERS 20-22 AND 28-30 ARE NOT USED IN 92463P.

9246A
9246P
TAPE ELECTRONICS
PAGE 26
D

SEE REV. E.O.			
SEE REV. E.O.			

SDS

DIAGRAM, LOGIC, MAG TAPE UNIT

MODEL NO 9246

SIZE D DWG NO 103258 D

103258 D

REVISIONS				103258 D
REV	DESCRIPTION	CHG	DATE	APPROVED
A	REL. TO MFG			
C	SEE REV. E.O.			
D	SEE REV E.O.			

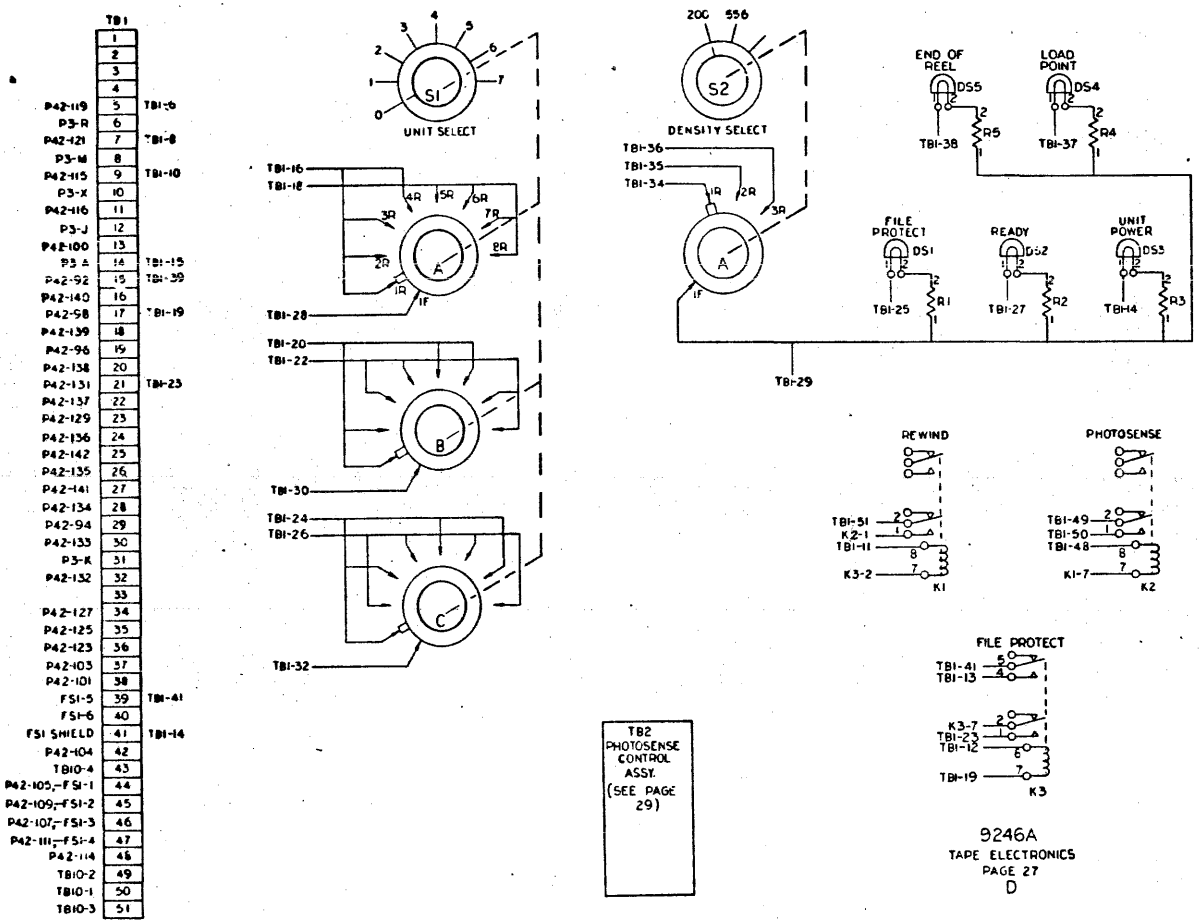

9246A
TAPE ELECTRONICS
PAGE 27
D

DRAWING NO	DESCRIPTION		REFERENCE DESIGNATION
	MATERIAL SPEC		
	DRAWN		SDS
	CHECKED		DIAGRAM, LOGIC, MAG TAPE UNIT
	APPD		
MODEL NO 9246			D 103258 D
NEXT ASSY			SHEET 27

103258 D

REVISIONS				103258 D
REV	DESCRIPTION	CHK	DATE	APPROVED
A	REL TO MFG.			
C	SEE REV. E.O.			
D	SEE REV E.C.			

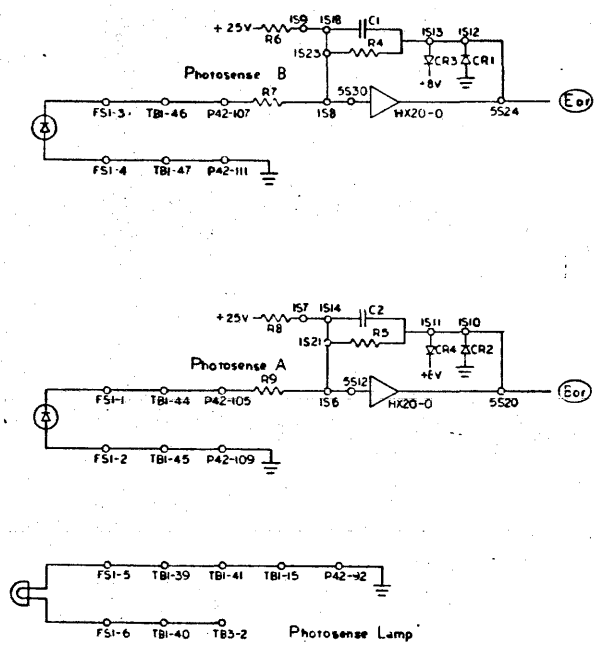

9246A
TAPE ELECTRONICS
PAGE 28
D

NO REQ	DRAWING NO	DESCRIPTION	REFERENCE DESIGNATION	ITEM NO
		MATERIAL LIST		

NOTES UNLESS SPECIFIED

DRAWN
CHECK
APPR

SDS SCIENTIFIC DATA SYSTEMS
1640 FIFTEENTH STREET SANTA MONICA CALIFORNIA

TITLE
DIAGRAM, LOGIC,
MAG TAPE UNIT

MODEL NO 9246
SHEET ASSY

SIZE D DWG NO 103258 D

SCALE DO NOT SCALE DRAWING SHEET 28

103258 D

REVISIONS				103258 D
REV	DESCRIPTION	CHG	DATE	APPROVED
A	REL TO MFG			
C	SEE REV. E.O.			
D	SEE REV E.O.			

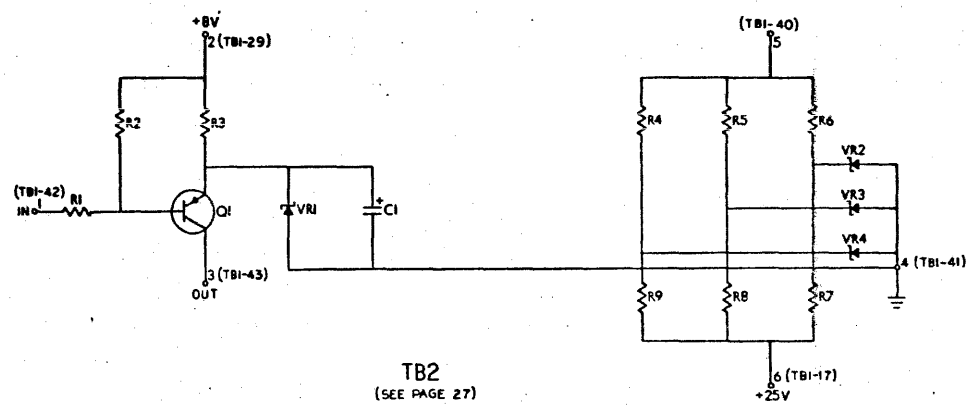

TB2
(SEE PAGE 27)

9246A,
MAG TAPE UNIT
PAGE 29
D

103258 D

NO REQ	DRAWING NO.	DESCRIPTION	REFERENCE DESIGNATION	TYPE NO.

MATERIAL LIST

NOTES UNLESS SPECIFIED

DRAWN		7/14/63
CHECK		7/16/63
APPR		7/18/

SDS

TITLE DIAGRAM, LOGIC
MAG TAPE UNIT

MODEL NO. 9246

SIZE D DWG NO. 103258 D

SCALE DO NOT SCALE DRAWING SHEET

REVISIONS				
REV	DESCRIPTION	CHK	DATE	APPROVED
A	REL. TO MFG.			
C	SEE REV. E.O.			
D	SEE REV. E.O.			

DESIGNATION	P42
LOCATION	'S
KEY	18-26

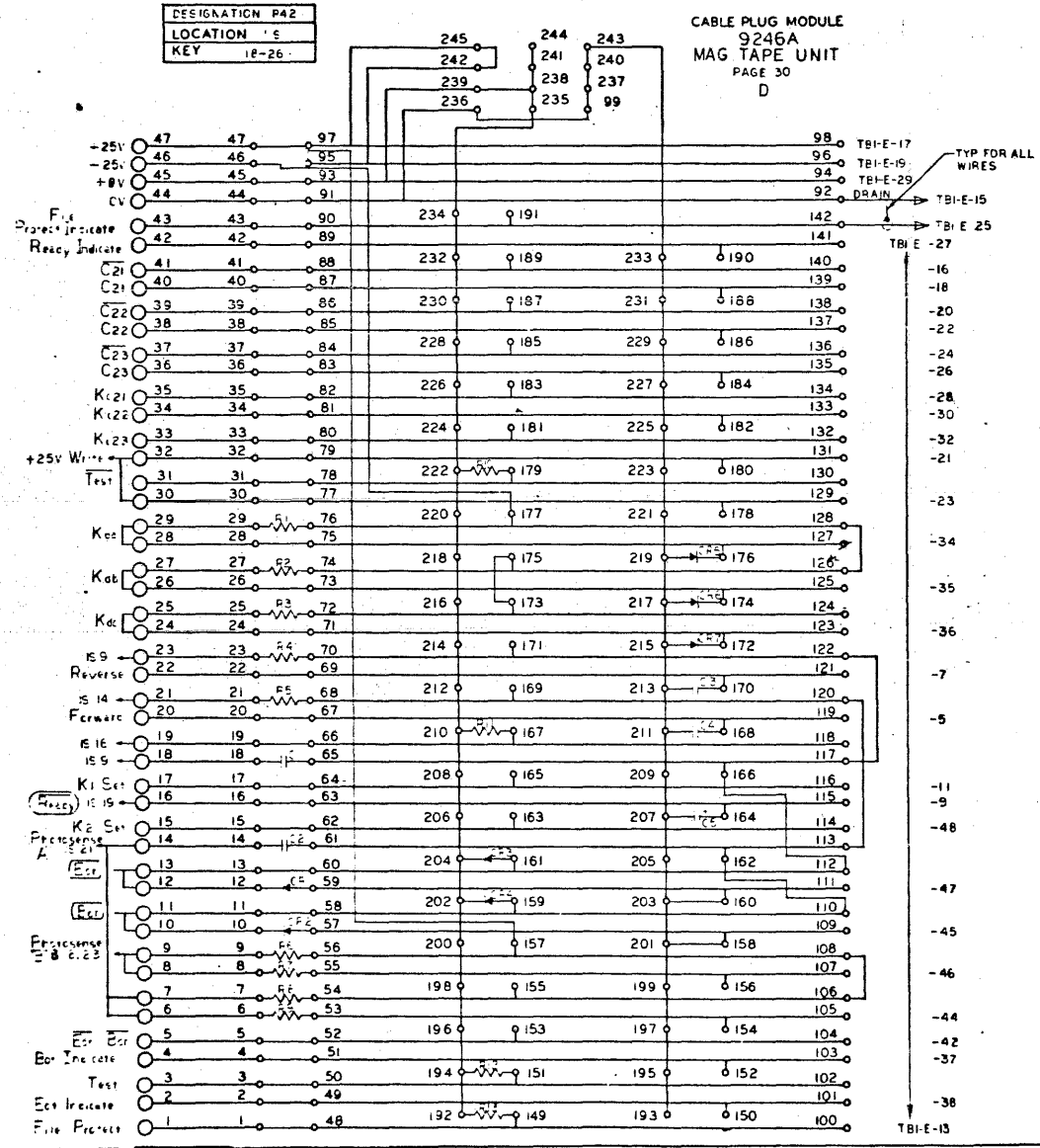

NO. REQ.	DRAWING NO.	DESCRIPTION	REFERENCE DESIGNATION	ITEM NO.
		MATERIAL LIST		

NOTES UNLESS SPECIFIED

DRAWN		7/20/66
CHECK		7/20/66
APPR		7/20/66

SDS SCIENTIFIC DATA SYSTEMS

TITLE: DIAGRAM, LOGIC, MAG TAPE UNIT

MODEL NO. 9246

NEXT ASSY

SIZE D | DWG NO. 103258 | D

SCALE | DO NOT SCALE DRAWING | SHEET 30

103258 D

REVISIONS				03258 D
REV	DESCRIPTION	CHK	DATE	APPROVED
A	REL. TO MFG.			
C	SEE REV. E.O.			
D	SEE REV E.O.			

DESIGNATION	P43
LOCATION	25, 24V
KEY	18–28

CABLE PLUG MODULE
92-6A
92-6P
MAG TAPE UNIT
PAGE 31
D

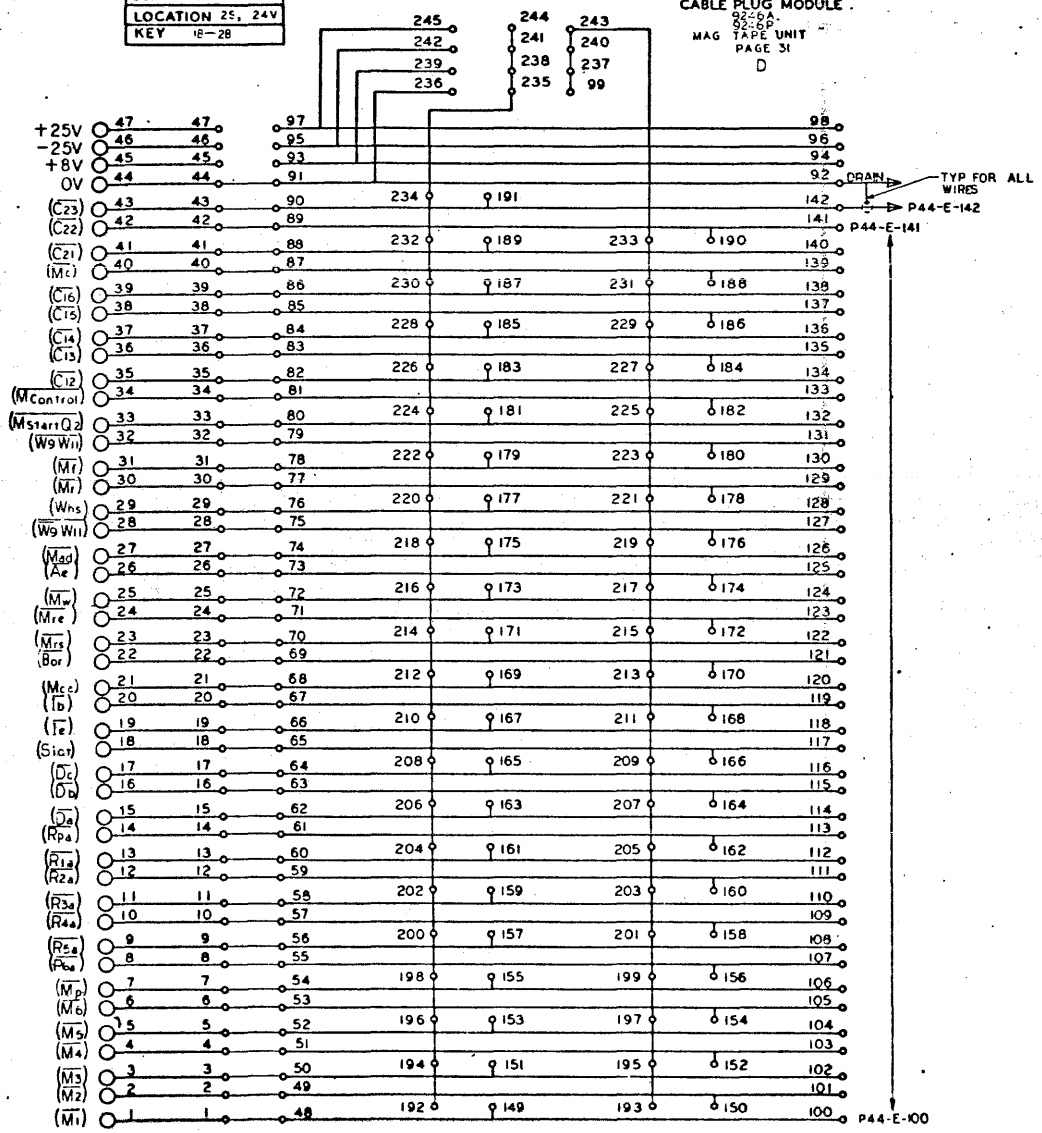

NO. REQ	DRAWING NO.	DESCRIPTION	REFERENCE DESIGNATION	ITEM NO.
		MATERIAL LIST		

NOTES UNLESS SPECIFIED

DRAWN		7/8/63
CHECK		7/10/63
APPR		7/11/63

SDS

TITLE: DIAGRAM, LOGIC, MAG TAPE UNIT

MODEL NO. 9246

SIZE D — DWG NO. 03258 — D

SCALE — DO NOT SCALE DRAWING — SHEET 31

03258 D

REVISIONS				103258 D
REV	DESCRIPTION	CHK	DATE	APPROVED
A	REL. TO MFG.			
C	SEE REV. E.O.			
D	SEE REV E.O.			

DESIGNATION	P44
LOCATION	3S
KEY	18–30

CABLE PLUG MODULE
9246A
9246P
MAG TAPE UNIT
PAGE: 32.
D

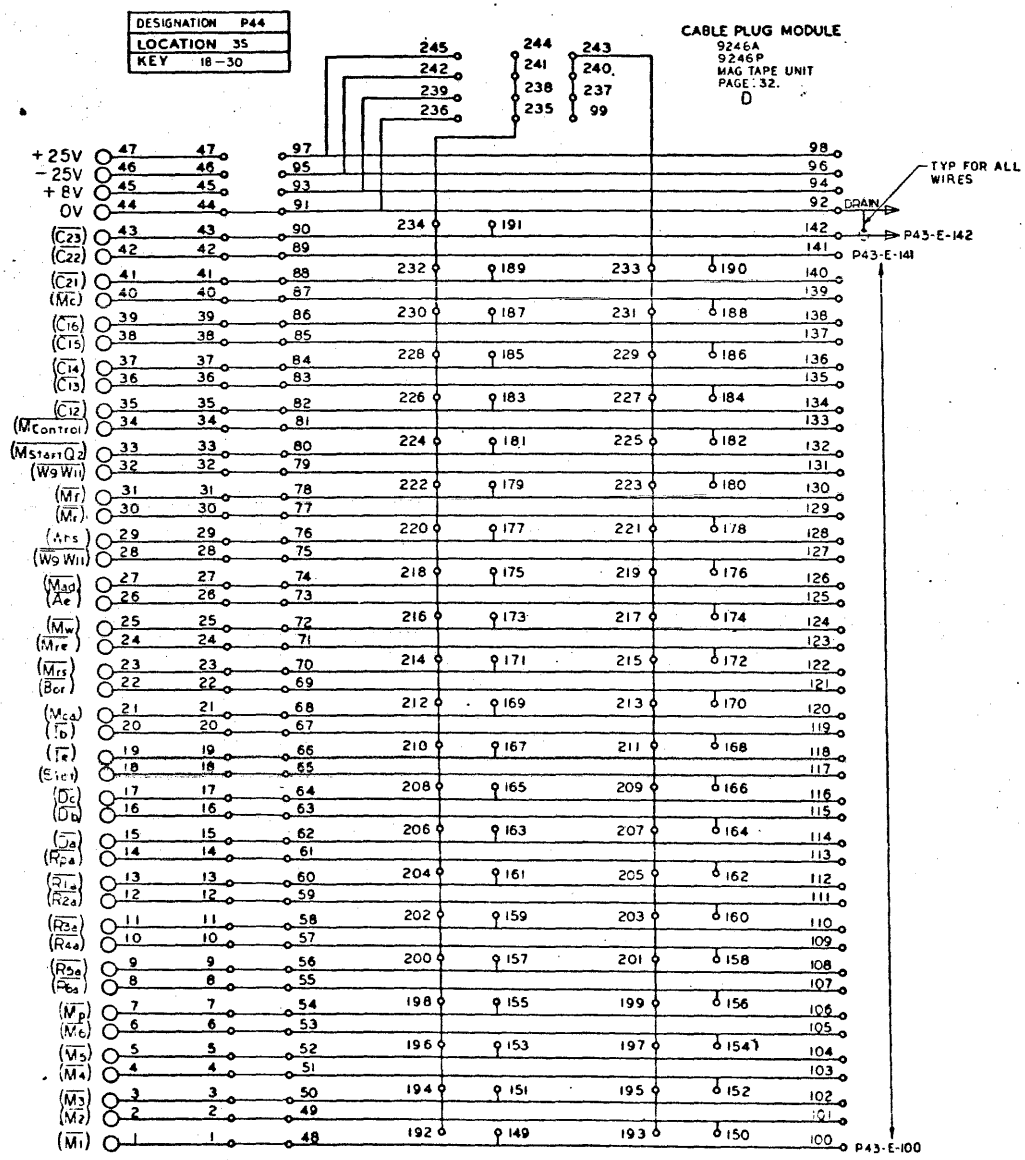

NO. REQ.	DRAWING NO.	DESCRIPTION	REFERENCE DESIGNATION	ITEM NO.
		MATERIAL LIST		

NOTES UNLESS SPECIFIED

DRAWN		
CHECK		
APPR		

SDS

TITLE
DIAGRAM, LOGIC,
MAG TAPE UNIT

MODEL NO. 9246

NEXT ASSY

SIZE D | DWG NO. 103258 | D

SCALE | DO NOT SCALE DRAWING | SHEET 2-2

103258 D

REV	DESCRIPTION	BY	DATE	APPROVED
A	REL TO MFG			
C	SEE REV. E.O.			
D	SEE REV E.O.			

103258 D

	1	2	3	4	5	6	7	8	9	10	11	12	13	14	15	16	17	18	19	20	21	22	23	24	25
Q	RX 10	FH 17	OX 13	GC 10	BC 10	IH 12	GC 10	BC 10	IC 12	BC 10	BC 10	GC 11		OX 13	OX 13	OX 13	OX 13	OX 13	HK60	HK60	HK60	HK60	HK60	HK60	HK60
S	P42 ('A' UNITS) P70 ('P' UNITS)	P43 ZK57	P44	ZK 58	HX20 (NOT USED ON 'P' UNITS)	AX 14	AX 14	AX 14			IC 12	IC 12	GC 10	OX 13	OX 13	FC 17	FC 17	AK 52	AK 52	ZK56 NOT USED ON 9246A				ZK 51	ZK 51

9246A
9246P

TAPE ELECTRONICS
PAGE 33
D

NO REQ	DRAWING NO	DESCRIPTION	REFERENCE DESIGNATION	ITEM NO

MATERIAL LIST

NOTES UNLESS SPECIFIED

1. TOLERANCES: DIMENSIONS ANGULAR ±1%
2. DIMENSIONS ARE DIAGRAM ONLY
3. MACH. SURFACES
4. FILL AREA TO DRAWING

DRAWN		7/1/63
CHECK		7/1/63
APPD		7/7/63

SDS

DIAGRAM, LOGIC, MAG TAPE UNIT

MODEL NO 9246

SHEET ASSY

SIZE D DWG NO 103258 D

SCALE DO NOT SCALE DRAWING SHEET 33

REVISIONS			103258	D
REV	DESCRIPTION	CHK	DATE	APPROVED
A	REL TO MFG			
C	SEE REV. E.O.			
D	SEE REV E.O.	BC		

MODULE LIST

ITEM	DESCRIPTION	MODEL	QTY.
1	WRITE DRIVER	AK52	2
2	CABLE DRIVER	AX14	3
3	AND/OR BUFFER AMP	BC10	4
4	UNIVERSAL F.F.	FC17	2
5	GATE EXPANDER	GC10	3
6	GATE EXPANDER	GC11	1
7	OPERATIONAL AMP	HX20-0	1
8	READ AMP	HK60	7
9	AND INVERTER	IC12	3
10	ONE SHOT MULT.	OX15	8
11	RELAY DRIVER	RX10	1
12	RESISTOR	ZK51	2
13	TERM. MODULE	ZK56	1
14	TERM. MODULE	ZK57	1
15	TERM. MODULE	ZK58	1
16	AND INVERTER	IH12	1
17	UNIVERSAL F.F.	FH17	1

REPLACEMENT PARTS LIST

ITEM	DESCRIPTION	DESIGNATION	QTY.	SUPPLIER CODE (SEE INDEX)
1	RESISTOR, 3.3K ± 2%	(P42) R1, R2, R3	3	16, 17
2	1 MEGΩ	(P42) R4, R5, R6, R8	4	16, 17
3	1K	(P42) R7, R9	2	16, 17
4	RESISTOR, 8.2K ± 2%	(P42) R10, R11, R12, R13	4	16, 17
5	CAPACITOR, MYLAR .0033μF ± 10%	(P42) C1, C2	2	26, 27, 74
6	CAPACITOR, MYLAR .0068μF ± 10%	(P42) C3, C4	2	26, 27, 74
7	CAPACITOR, TANTALUM .47 μF ± 20% 50V	(P42) C5	1	23, 77
8	DIODE, SILICON SWITCHING 1N914A	(P42) CR1 THRU CR7	7	4, 12, 13, 14
9	CONNECTOR, SOLDERTAIL 47 CONTACT # 7005-47	J(1Q) THRU J(25Q) J(1S) THRU J(20S) J(24S), J(25S)	47	82
10	RESISTOR, 1.8K ± 2%	(TB2) R1	1	16, 17
11	15K	(TB2) R2	1	
12	180Ω	(TB2) R3	1	
13	390Ω	(TB2) R4, R5, R6	3	
14	RESISTOR, 470Ω ± 2%	(TB2) R7, R8, R9	3	16, 17
15	DIODE, VOLTAGE REGULATOR 1N752	(TB2) VR1	1	2, 12, 13, 14
16	DIODE, VOLTAGE REGULATOR 1N964A	(TB2) VR2, VR3, VR4	3	2, 6, 14, 65
17	CAPACITOR, TANTALUM 4.7μF ± 20%, 50V	(TB2) C1	1	23, 77
18	TRANSISTOR, SILICON SWITCHING 2N1132	(TB2) Q1	1	3, 10, 11
19	RECEPTACLE, 19 PIN # 25K19-315L	J1	1	134
20	PLUG, 19 PIN # SK19-325	J2	1	134
21	SWITCH, ROTARY # 102163	S1, S2	2	SDS
22	LAMP, INCANDESCENT # 47	DS1 THRU DS5	5	84
23	RESISTOR, WW 10Ω ± 5%	R1 THRU R5	5	99, 100
24	RELAY, DPDT # DOSX-7T # 80-6A/115 VAC	K1 THRU K4	4	78 79
25	SWITCH, TOGGLE DPDT # 83054-SE	S1(S)	1	106
26	CAPACITOR, TANTALUM 4.7μF ± 20% 50V	C1(Q)	1	23, 77

9246A,
MAG TAPE UNIT
PAGE 34
D

NO. REQ	DRAWING NO.	DESCRIPTION	REFERENCE DESIGNATION	ITEM NO.

MATERIAL LIST

NOTED UNLESS SPECIFIED

DRAWN 7/19/62
CHECK 7/23/62
APPR. 7/31/62

SDS

TITLE
DIAGRAM, LOGIC
MAG TAPE UNIT

MODEL NO. 9246
NEXT ASSY.

SIZE D DWG NO. 103258 D

SCALE DO NOT SCALE DRAWING SHEET

103258 D

REV	DESCRIPTION	CHK	DATE	APPROVED
A	REL TO MFG			
C	SEE REV. E.O.			
D	SEE REV E.O.			

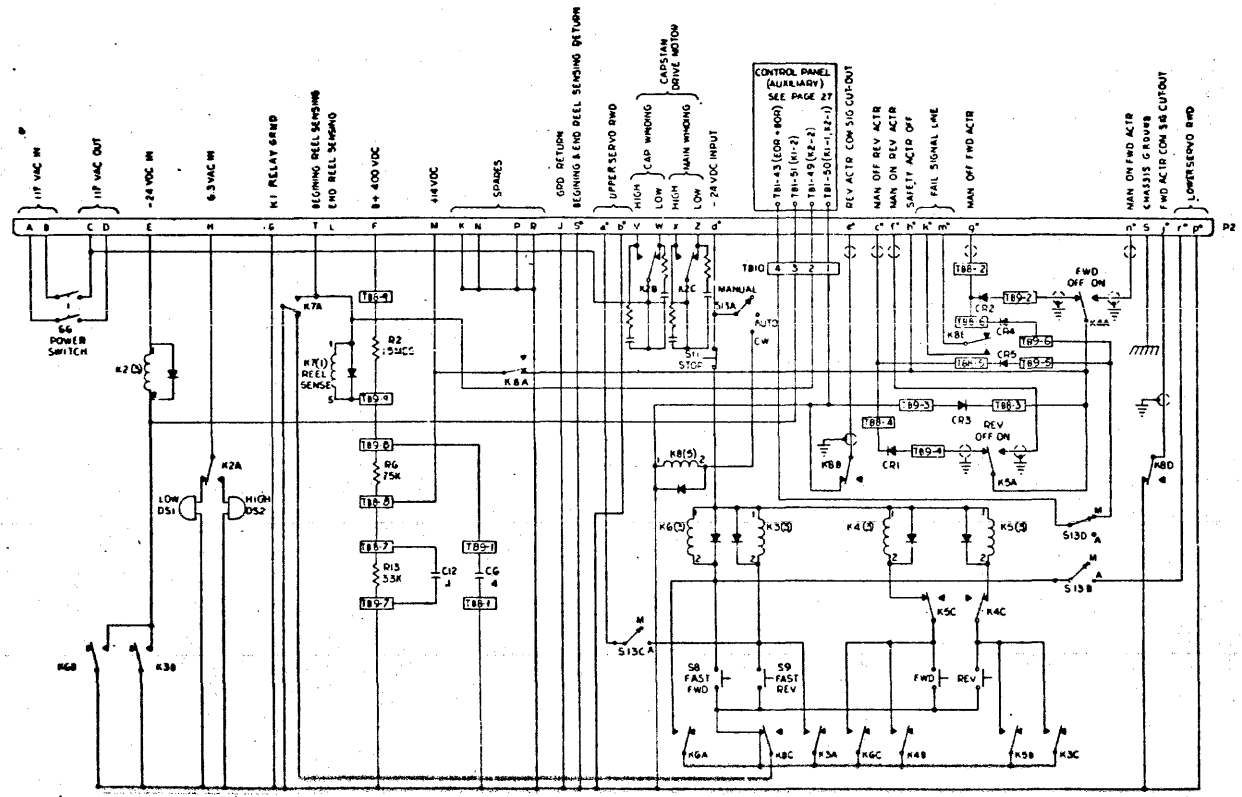

7. ⏚ IDENTIFIES CHASSIS GROUND, ⏚ SIGNIFIES COMMON GROUND
6. USED WITH ASSY. NO 310843710
5. S13- D-E NOT USED
4. ALL DIODES ARE 1N2069
3. ALL RELAYS SHOWN IN DEENERGIZED POSITION
2. ALL RESISTORS IN OHMS
1. ALL CAPACITORS IN MICROFARADS

MANUAL CONTROL PANEL

9246A,
MAG TAPE UNIT
PAGE 35
D

NO. REQD	DRAWING NO.	DESCRIPTION	REFERENCE DESIGNATION	REV. NO.

MATERIAL LIST

NOTES UNLESS SPECIFIED

DRAWN 7/7/63
CHECK 7/7/63
APPR 7/8/63

SDS

TITLE
DIAGRAM, LOGIC
MAG TAPE UNIT

MODEL NO. 9246

NEXT ASSY

SIZE D DWG NO. 103258 D

SCALE DO NOT SCALE DRAWING SHEET 35

103258 D

REVISIONS				103258
REV	DESCRIPTION	CHK	DATE	APPROVED
C	SEE REV. E.O.			
D	SEE REV E.O.			

NOTES: UNLESS OTHERWISE SPECIFIED

1. RECEPTACLES J1 & J2 ARE PROVIDED FOR CONNECTION TO THE READ & WRITE HEADS O THE MAG TAPE UNIT.
2. RECEPTACLE J(15) IS PROVIDED FOR P7O FROM CONTROL PANEL.
3. RECEPTACLE J(3S) IS PROVIDED FOR THE P44 TO P43 CABLE. P43 CONNECTS TO RECEPTACLE J(24V) OF THE MODEL 9248 CONTROL UNIT OR TO J(2S) OF A SECOND MODEL 9246.
4. USED ON 92463P ONLY, RESISTOR 100680-750.

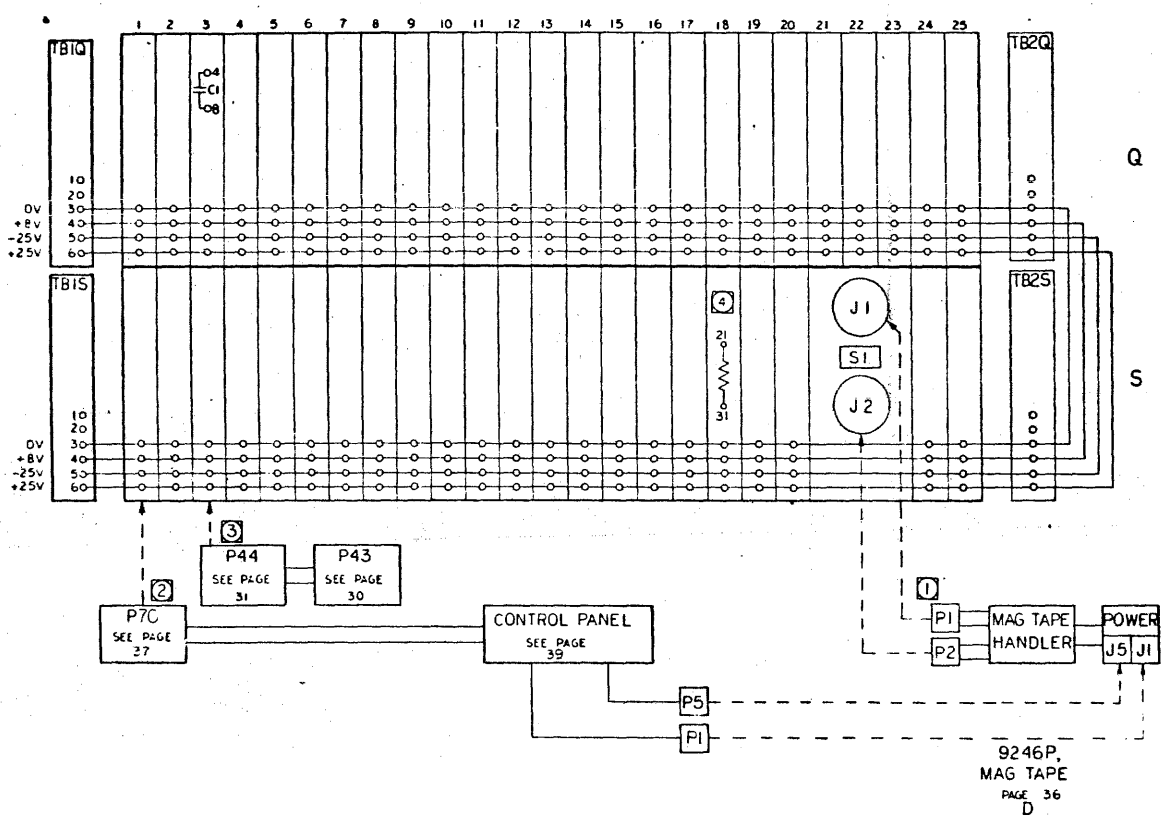

DRAWING NO	DESCRIPTION	REFERENCE DESIGNATION	ITEM NO
	MATERIAL LIST		

NOTES UNLESS SPECIFIED

SDS

TITLE: DIAGRAM, LOGIC MAG TAPE

MODEL NO: 9246

SIZE: D | DWG NO: 103258 | D

SCALE | DO NOT SCALE DRAWING | SHEET

103258 D

REV	DESCRIPTION	CHG	DATE	APPROVED
C	SEE REV. E.O.			
D	SEE REV E.O.			

DESIGNATION	P70
LOCATION	1S
KEY	18-26

CABLE PLUG MODULE
9246P,
MAG TAPE UNIT
PAGE 37
D

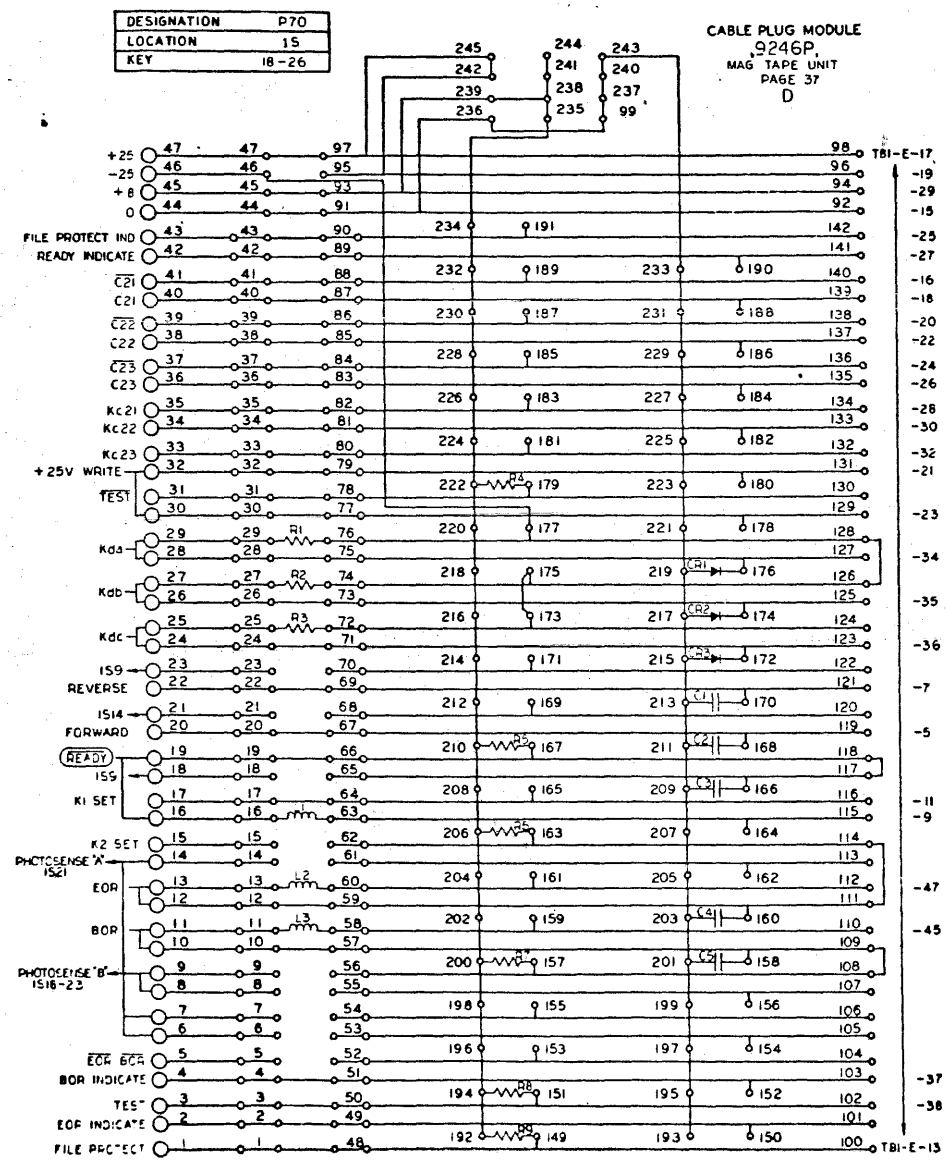

NO REQ	DRAWING NO	DESCRIPTION	REFERENCE DESIGNATION	FINISH NO.

MATERIAL LIST

NOTES UNLESS SPECIFIED

DRAWN W. STEHEE 4/7/
CHECK
APPD

SDS SCIENTIFIC DATA SYSTEMS

TITLE DIAGRAM, LOGIC
MAG TAPE UNIT

MODEL NO. 9246

NEXT ASSY

SIZE D DWG NO. 103258 D

SCALE DO NOT SCALE DRAWING SHEET 37

103258 D

REVISIONS				103258 D
REV	DESCRIPTION	CHG	DATE	APPROVED
C	SEE REV. E.O.			
D	SEE REV E.O.			

MODULE LIST

ITEM	DESCRIPTION	MODEL	QTY
1	WRITE DRIVER	AK52	2
2	CABLE DRIVER	AX14	3
3	AND/OR BUFFER AMP	BC10	4
4	UNIVERSAL F.F.	FC17	2
5	GATE EXPANDER	GC10	3
6	GATE EXPANDER	GC11	1
7	READ AMP	HK60	7
8	AND INVERTER	IC12	3
9	ONE SHOT MULT.	OX13	8
10	RELAY DRIVER	RX10	1
11	RESISTOR	ZK51	2
12	TERM. MODULE	ZK56	1
13	TERM. MODULE	ZK57	1
14	TERM. MODULE	ZK58	1
15	AND INVERTER	IH12	1
16	UNIVERSAL F.F.	FH17	1

REPLACEMENT PARTS LIST

ITEM	DESCRIPTION	DESIGNATION	QTY.	SUPPLIERS CODE (SEE INDEX)
1	RESISTOR, 3.3 K ± 2%	(P70) R21, R22, R23	3	16, 17
2	RESISTOR, 1.8 K ± 2%	(P70) R26, R27	2	16, 17
3	RESISTOR, 8.2 K ± 2%	(P70) R24, R28, R29	3	16, 17
4	CAPACITOR, MYLAR .0068 μF ± 10%	(P70) C1, C2	2	26, 27, 74
5	CAPACITOR, MYLAR .0033 μF ± 10%	(P70) C4, C5	2	26, 27, 74
6	DIODE, SILICON SWITCHING 1N914A	(P70) CR1 THRU CR3	3	4, 12, 13, 14
7	INDUCTOR, MOLDED 10000 μH ± 5%	(P70) L2, L3	2	42, 90, 91
8	RECEPTACLE, 19 PIN #RSK 19-315L	J1	1	134
9	PLUG, 19 PIN #SK19-326	J2	1	134
10	SWITCH, ROTARY #102163	S101, S102	2	505
11	RESISTOR, WW 10 Ω ± 5%	R1 THRU R5	5	99, 100
12	RELAY, DPDT #DOSX-7T #80-6A/115 VAC	K1, K3	2	78 79
13	SWITCH, TOGGLE DPDT #83054-5E	S1(S)	1	106
14	CAPACITOR, TANTALUM 4.7 μF ± 20% 50V	C1(Q)	1	23, 77
15	CONNECTOR, SOLDERTAIL 47 CONTACT #700B-47	J(1Q) THRU J(26Q) J(1S) THRU J(20S) J(24S), J(25S)	47	82
16	LAMP, MINIATURE #328	DS101 THRU DS105	20	83, 84
17	INDUCTOR, MOLDED 330 μH ± 5%	(P70) L1	1	42, 90, 91
18	RESISTOR, 560 Ω ± 2%	(P70) R5	1	16, 17
19	CAPACITOR, MYLAR, .0010 μF ± 10%	(P70) C3	1	26, 27, 74

9246P,
MAG TAPE UNIT
PAGE 38
D

* NOT USED ON 92463P

DWG. NO.	DRAWING NO.	DESCRIPTION	REFERENCE DESIGNATION	ITEM NO.

MATERIAL LIST

NOTED UNLESS SPECIFIED

DRAWN 4/1/69
CHECK
APPR

GDS
GENERAL DATA SYSTEMS
SANTA MONICA, CALIFORNIA

TITLE
DIAGRAM, LOGIC,
MAG TAPE UNIT

MODEL NO.
NEXT ASSY.

SIZE D | DWG. NO. 103258 | CHANGE NOTE D

SCALE | DO NOT SCALE DRAWING | SHEET

103258 D

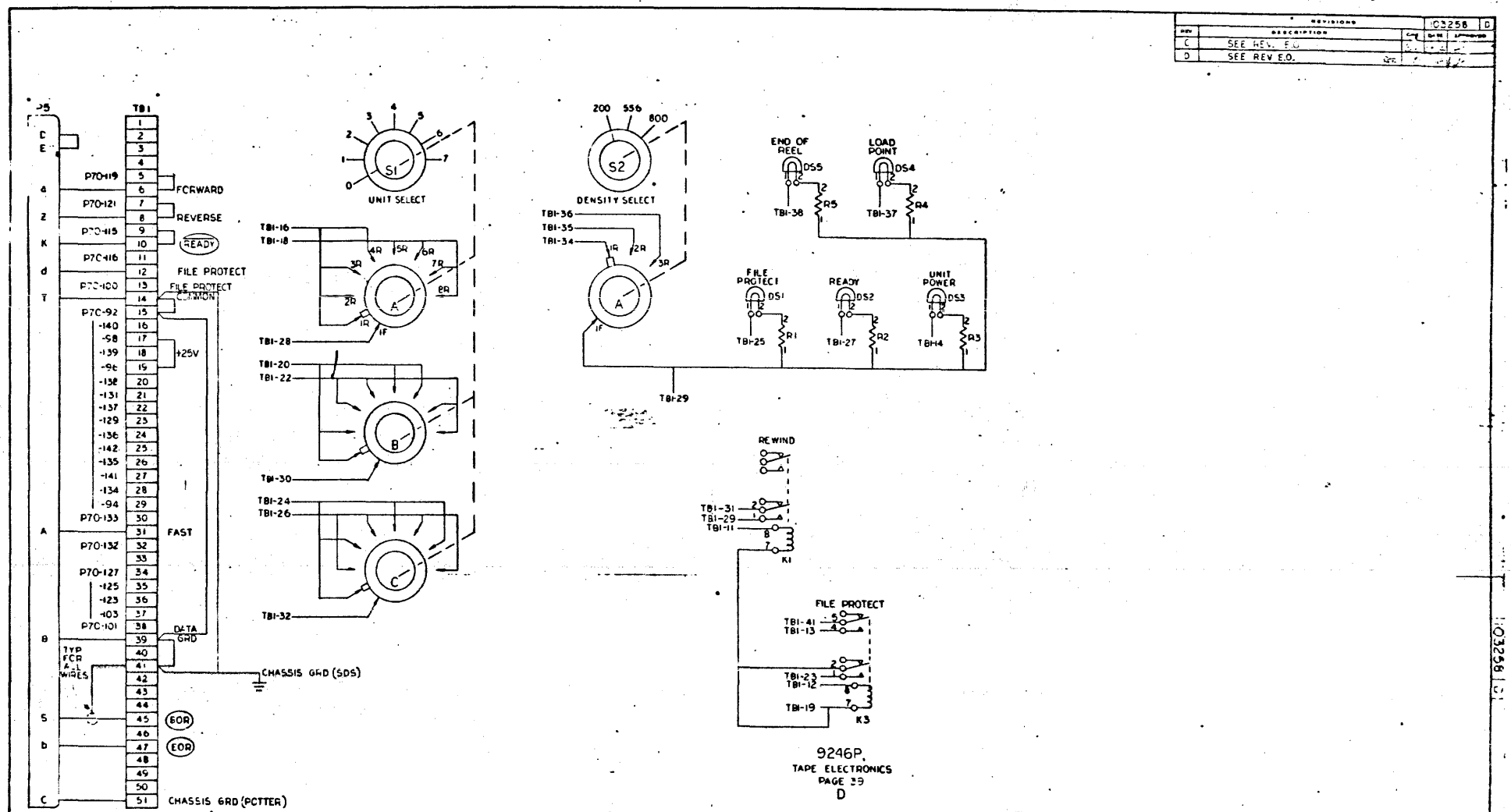
J5
TB1
P70-119
P70-121
P70-115
P70-116
P70-100
P70-92
P70-133
P70-132
P70-127
P70-101
FORWARD
REVERSE
READY
FILE PROTECT
FILE PROTECT COMMON
+25V
FAST
DATA GRD
TYP FOR ALL WIRES
EOR
EOR
CHASSIS GRD (SDS)
CHASSIS GRD (PCTTER)
S1
UNIT SELECT
S2
DENSITY SELECT
200
556
800
TB1-16
TB1-18
TB1-28
TB1-20
TB1-22
TB1-30
TB1-24
TB1-26
TB1-32
TB1-36
TB1-35
TB1-34
TB1-29
END OF REEL
LOAD POINT
FILE PROTECT
READY
UNIT POWER
DS5
DS4
DS1
DS2
DS3
TB1-38
TB1-37
TB1-25
TB1-27
TB1-4
R5
R4
R1
R2
R3
REWIND
TB1-31
TB1-29
TB1-11
K1
FILE PROTECT
TB1-41
TB1-13
TB1-23
TB1-12
TB1-19
K3
9246P
TAPE ELECTRONICS
PAGE 39
D
REVISIONS
103258 D
C SEE REV. E.O.
D SEE REV E.O.
WINTHER
SDS
DIAGRAM, LOGIC,
MAG TAPE UNIT
9246
D
103258
D

CONTENTS

Item		Page No.
1.	Revision Level Indicator	1
2.	Cabling Diagram, Ampex System	2
3.	Signal Directory	3
4.	Logic Diagrams	4 thru 26
5.	Auxiliary Control Panel, Ampex System	27 thru 30
6.	Cable P43 - P44	31, 32
7.	Module Locator	33
8.	Replacement Parts, Ampex System	34
9.	Control Panel, Ampex System	35
10.	Cabling Diagram, Potter System	36
11.	Auxiliary Control Panel, Potter System	37 & 39
12.	Replacement Parts, Potter System	38
13.	Termination Modules Schematic	
	a) ZK51	
	b) ZK56	
	c) ZK57	
	d) ZK58	
	e) ZK67 & 68	

Module Changes

9248	92481	92482	92483	9348	Coordinate With EO	Module Change		
EO 103514	EO 107535	EO 107536	EO 107537	EO 107538		From	To	Loca.
B					EO 103403B	OX13	CK52	5V
D					NONE	OX11	OX13	2K
D					NONE	OX11	OX13	3K
D					NONE	OX11	OX13	9K
D					NONE	OX11	OX13	4V
D					NONE	OX11	OX13	6V
E					EO 103403S	FC17	FH17	1K
E					EO 107514H	FC17	FH17	15K
E						FC17	FH17	19K
E						FC17	FH17	20K
F	B	B	B	B		GC10	GH10	10K
F	B	B	B	B		GC10	GH10	11K
G	B	B	C	B		GC10	GH10	17K
G	B	B	C	B		GC10	GH10	18K
G	B	B	C	B		IC12	IH12	16V
H	C				EO 107514H	OX13	OX14	9K
		C	A	C	EO 103043S	OX13	OX14	2V
		C	A	C	EO 107514H	OX13	OX14	9K

REV	DESCRIPTION	CHK	DATE	APPROVED
A	[illegible] TO MAG			
B	[illegible]			
C	[illegible] REV E.O.			
D	SEE SEE E.O.			
E	SEE REV E.O.			

NOTE:

THIS DWG APPLIES TO BOTH THE AMPEX (A) & POTTER (P) MAG TAPE UNITS. FOR SIMPLICITY ONLY 9246A AND/OR 9246P DESIGNATIONS ARE SHOWN ON INDIVIDUAL PAGES. 9246A IMPLIES 9246A, 92461A, 92462A, & 9346A. 9246P IMPLIES 9246P, 92461P, 92462P & 92463P. THE FOLLOWING CHART INDICATES THE EFFECTIVITY OF INDIVIDUAL PAGES.

PAGE	CHG	PAGE	CHG	PAGE	CHG	PAGE	CHG	PAGE	CHG
1	E								
2	E								
3	E								
4	E								
5	E								
6	C								
7	E								
8	E								
9	E								
10	E								
11	E								
12	E								
13	E								
14	E								
15	E								
16	E								
17	E								
18	E								
19	E								
20	E								
21	E								
22	E								
23	E								
24	E								
25	E								
26	E								
27	E								
28	D								
29	D								
30	E								
31	E								
32	E								
33	E								
34	E								
35	D								
36	E								
37	E								
38	E								
39	D								

NOTES:
1. REV LETTERS LISTED INDICATE STATUS OF EACH SHEET OF THIS MULTIPLE SHEET DRAWING.
2. CHECK INDIVIDUAL SHEETS FOR REVISION LETTER AGAINST THIS SHEET BEFORE USING THIS DRAWING.

REFERENCE DESIGNATIONS ARE ABBREVIATED. PREFIX THE DESIGNATION WITH UNIT NUMBER OR ASSEMBLY DESIGNATION OR BOTH. (MIL. STD. 16B)

PAGE NO	AMPEX ONLY	POTTER ONLY	BOTH	92462P/3P VARIATIONS
1			X	
2	X			
3			X	
4			X	
5			X	
6			X	
7			X	
8			X	
9			X	
10			X	
11			X	
12			X	
13			X	X
14			X	
15			X	
16			X	
17			X	
18			X	
19			X	
20			X	
21			X	
22			X	
23			X	
24			X	
25			X	
26			X	X
27	X			
28	X			
29	X			
30	X			
31			X	
32			X	
33			X	
34	X			
35	X			
36		X		X
37		X		
38		X		
39		X		

9246A,9246P
MAG TAPE UNIT
PAGE 1
E

LOGIC	WIRE LIST
103258 E	103404 M

103258 E

NO REQ	DRAWING NO.	DESCRIPTION	REFERENCE DESIGNATION	NOTE

MATERIAL LIST

NOTES UNLESS SPECIFIED

DRAWN / CHECK / APPR. 7/10/63

SDS SCIENTIFIC DATA SYSTEMS

TITLE DIAGRAM, LOGIC MAG TAPE UNIT

MODEL NO 9246

NEXT ASSY

SIZE D DWG NO. 103258 E

SCALE DO NOT SCALE DRAWING SHEET

103258 E

EO 103062 REVISION CHASSIS ASSEMBLY

Adds C1 capacitor to chassis Q J3. Capacitor part No. 100311-475. See logic diagram Page 5.

Reason: To fire 1 second delay (Dr) and hold off ready until delay runs out.

Tape units without capacitor added when performing a reverse scan and reaching load point (Bor) become immediately ready. Forward command can be issued before unit is capable of accepting it and will hang up.

Signal	Logic Pages
Ae	18, 24
$\overline{\text{Ae}}$	24, 31
Aes	6, 18
$\overline{\text{Aes}}$	6, 26
Bor	22, 28, 31, 37
Bor	4, 5, 6, 7, 19, 23, 24
$\overline{\text{Bor}}$	4, 22, 30
($\overline{\text{Bor}}$)	24
Bot	4, 8
$\overline{\text{Bot}}$	4, 5
Bot Indicate	8, 37, 30
Ch 1 Read	26
Ch 2 Read	26
Ch 3 Read	26
Ch 4 Read	26
Ch 5 Read	26
Ch 6 Read	26
Ch 7 Read	26
Ch 1 Write	13
Ch 2 Write	13
Ch 3 Write	13
Ch 4 Write	13
Ch 5 Write	13
Ch 6 Write	13
Ch 7 Write	13
C12	20, 7
$\overline{\text{C12}}$	30, 20
C13	20, 7
$\overline{\text{C13}}$	30, 20
C14	20, 7
$\overline{\text{C14}}$	30, 20, 7
C15	20, 7
$\overline{\text{C15}}$	30, 20, 7
C16	20, 7
$\overline{\text{C16}}$	30, 20, 7, 4
C21	22, 27, 30, 37, 39
$\overline{\text{C21}}$	31, 27, 37, 39, 22, 30
C22	22, 27, 37, 30, 39
$\overline{\text{C22}}$	31, 37, 30, 39, 27, 22
C23	22, 27, 37, 30, 39
$\overline{\text{C23}}$	31, 30, 37, 39, 27, 22
($\overline{\text{Da}}$)	24, 31

Signal	Logic Pages
($\overline{\text{Db}}$)	24, 31
($\overline{\text{Dc}}$)	24, 31
Debt	4, 5, 23
Dr	5, 4, 6
$\overline{\text{Dr}}$	6, 4
Eor	28, 30, 22
Eor	4, 5, 19, 22, 23, 30, 37
$\overline{\text{Eor}}$	22
Eor + Bor	22, 8
EOR + BOR	29, 35 A only
$\overline{\text{Eor}}$ $\overline{\text{Bor}}$	19, 22, 29, 30, 37
Eot	4, 5, 7, 8
$\overline{\text{Eot}}$	4, 5
Eot Indicate	8, 30, 37
File Protect	30, 37, 7, 8
File Protect Indicate	8, 30, 37
Forward Actuate	13, 30, 37
($\overline{\text{Ib}}$)	23, 31
($\overline{\text{Ie}}$)	23, 31
Kc21	27, 39, 6, 30, 37
Kc22	27, 39, 6, 30, 37
Kc23	27, 39, 6, 30, 37
Kda	27, 24, 30, 37, 7, 39
Kdb	27, 24, 30, 37, 7, 39
Kdc	27, 24, 30, 37, 7, 39
K1 Set	8, 30, 37
K2 Set	8, 30, 37
Ma	4, 18, 19, 24
$\overline{\text{Ma}}$	4, 6, 24, 25
Mad	22
$\overline{\text{Mad}}$	22, 4
($\overline{\text{Mad}}$)	24
Ma Mf	19, 13, 15, 17, 18, 5
Ma Mr	19, 14, 16, 18, 5
Ma Mr + Mb	19, 5, 13
Ma Test	19, 14, 15, 16, 17, 18
Ma Test*	19
Ma $\overline{\text{Test}}$	19, 13
Mb	4, 5, 8, 19
$\overline{\text{Mb}}$	4, 6
Mc	6, 5, 9, 10
$\overline{\text{Mc}}$	6

Signal	Logic Pages
(Mca)	30, 21
$\overline{\text{Mca}}$	4, 5, 21
M Control	20, 4
$\overline{\text{M Control}}$	31, 20
Mf	30, 21, 23
($\overline{\text{Mf}}$)	30, 21
Mp	31, 21, 5
($\overline{\text{Mp}}$)	31, 21
Mps	5, 11, 19
Mpt	11, 5, 13
Mpw	13
Mr	30, 4, 19, 21
($\overline{\text{Mr}}$)	31, 21
$\overline{\text{Mre}}$	31, 11, 12
Mrs	5, 6, 9, 10
$\overline{\text{Mrs}}$	6, 31
M Start Q2	20, 4
($\overline{\text{M Start Q2}}$)	31, 20
Mw	6, 5, 9, 10
($\overline{\text{Mw}}$)	31, 6
M1	21, 9
($\overline{\text{M1}}$)	31, 21
M2	21, 9
($\overline{\text{M2}}$)	31, 21
M3	21, 9
($\overline{\text{M3}}$)	31, 21
M4	21, 10
($\overline{\text{M4}}$)	31, 21
M5	21, 10
($\overline{\text{M5}}$)	31, 21
M6	21, 10
$\overline{\text{M6}}$	31, 21
M1s	9, 11, 19
M2s	9, 11, 19
M3s	9, 12, 19
M4s	10, 12, 19
M5s	10, 12, 19
M6s	10, 12, 19
M1t	11, 9, 13
M2t	11, 9, 13
M3t	12, 9, 13
M4t	12, 10, 13

Signal	Logic Pages
M5	12, 10, 13
M6t	12, 10, 13
M1w	13
M2w	13
M3w	13
M4w	13
M5w	13
M6w	13
Photosense A, B	28, 29, 30
Ready	30, 4, 6, 8, 37
Ready	6, 4, 7, 8
Ready	6
Ready Indicate	8, 30, 37
Reverse Actuate	13, 30, 37
Rpa	18, 19, 25
($\overline{\text{Rpa}}$)	25, 31
Rpa	26, 18
Rpaf	18
Rpar	18
Rpy	26
Rpz	26
R1a	16, 17, 19, 25
R2a	16, 17, 19, 25
R3a	16, 17, 19, 25
R4a	14, 15, 19, 25
R5a	14, 15, 19, 25
R6a	14, 15, 19, 25
$\overline{\text{R1a}}$	25, 31
$\overline{\text{R2a}}$	25, 31
$\overline{\text{R3a}}$	25, 31
$\overline{\text{R4a}}$	25, 31
$\overline{\text{R5a}}$	25, 31
$\overline{\text{R6a}}$	25, 31
R1a	26, 16, 17
R2a	26, 16, 17
R3a	26, 16, 17
R4a	26, 14, 15
R5a	26, 14, 15
R6a	26, 14, 15
R1af	16
R2af	16
R3af	16

Signal	Logic Pages
R4af	14
R5af	14
R6af	14
R1ar	17
R2ar	17
R3ar	17
R4ar	15
R5ar	15
R6ar	15
R1y	26
R2y	26
R3y	26
R4y	26
R5y	26
R6y	26
R1z	26
R2z	26
R3z	26
R4z	26
R5z	26
R6z	26
(Siot)	23, 31
$\boxed{\text{Siot}}$	7, 23
Test	13, 19, 30, 37
$\overline{\text{Test}}$	13, 19, 30, 37
Tha	26
Thd	26
Unit Select	6, 4, 7, 23
Write Activate	13
W9 W11	21, 13, 26
($\overline{\text{W9 W11}}$)	31, 21
$\overline{\text{W9}}$ W11	21, 26
($\overline{\text{W9 W11}}$)	31, 21
Whs	32, 4, 31

9246A
9246P

PAGE 3
E

From	To	Reason
103258A 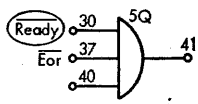 	103758B 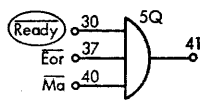 	Wire list EO 103404B Adds $\overline{Ma}$ term to eliminate resetting Eot Flip-Flop due to noise on ready line.
103258D 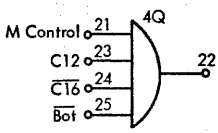 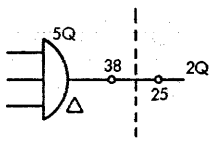 	103258E 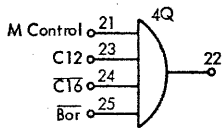 Remove connection 5Q 38 to 2Q 25	Wire list EO 103404H Changes $\overline{Bot}$ term to $\overline{Bor}$ driving set side of Mb Flip-Flop. For reverse scan and rewind problems at beginning of tape. Noise on the $\overline{Mad}$ line setting Ma. Also $\overline{Mad}$ is redundant. EOM's can only legally select one unit at a time.

REV	DESCRIPTION	DATE	APPROVED
A	REL TO MFG		
B	SEE REV EO		
C	SEE REV EO		
D	SEE REV EO		
E	SEE REV EO		

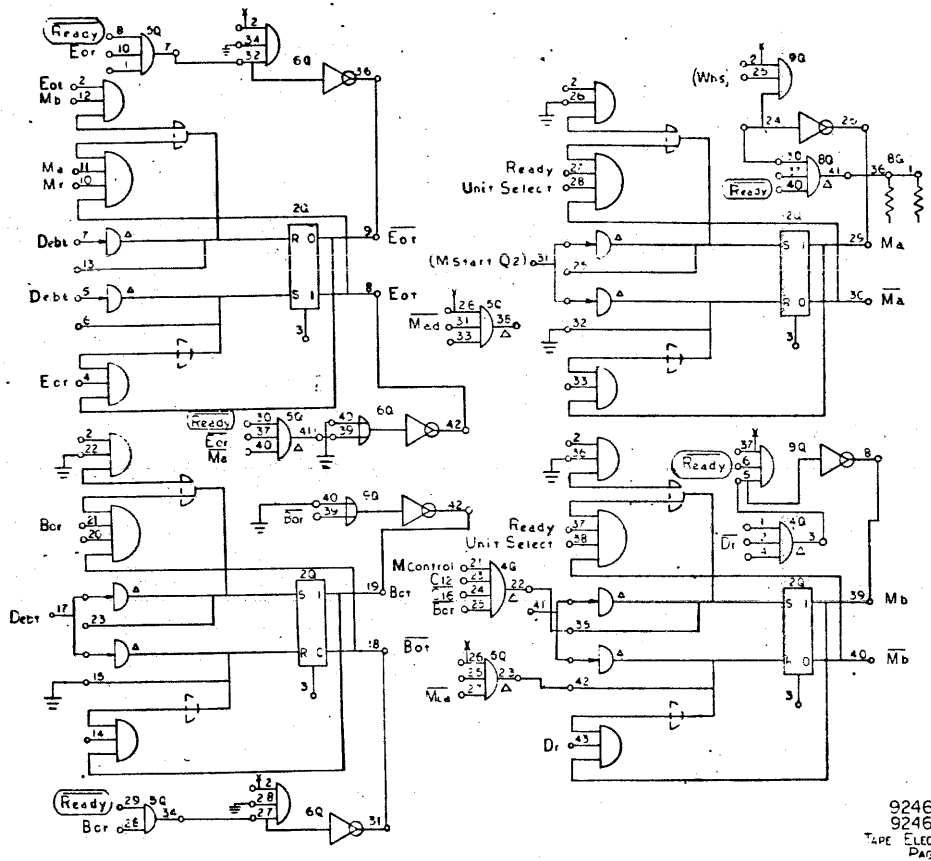

NO REQ	DRAWING NO	DESCRIPTION	REFERENCE DESIGNATION	ITEM NO

NOTES UNLESS SPECIFIED

MODEL NO 9246

NEXT ASSY

DRAWN / CHECK / APPR

SDS

DIAGRAM, LOGIC, MAG TAPE UNIT

D 103258 E

SHEET 4

103258 E

From	To	Reason
103258D 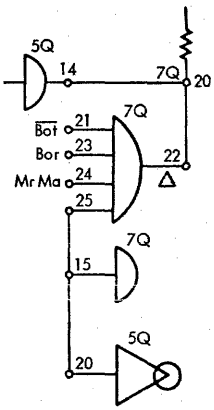	103258E 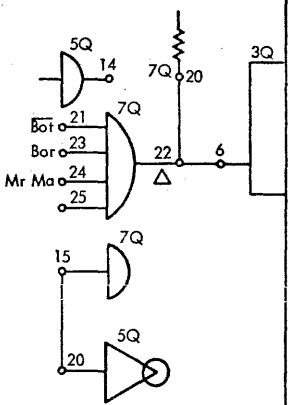	103404H $\overline{\text{BOT}}$ sets 1 sec delay for reverse scan and rewind problems at beginning of tape.

REV	DESCRIPTION	DATE	APPROVED
A	REL TO MFG		
B	SEE REV B.O.		
D	SEE REV E.O.		
E	SEE REV E.O.		

C3258

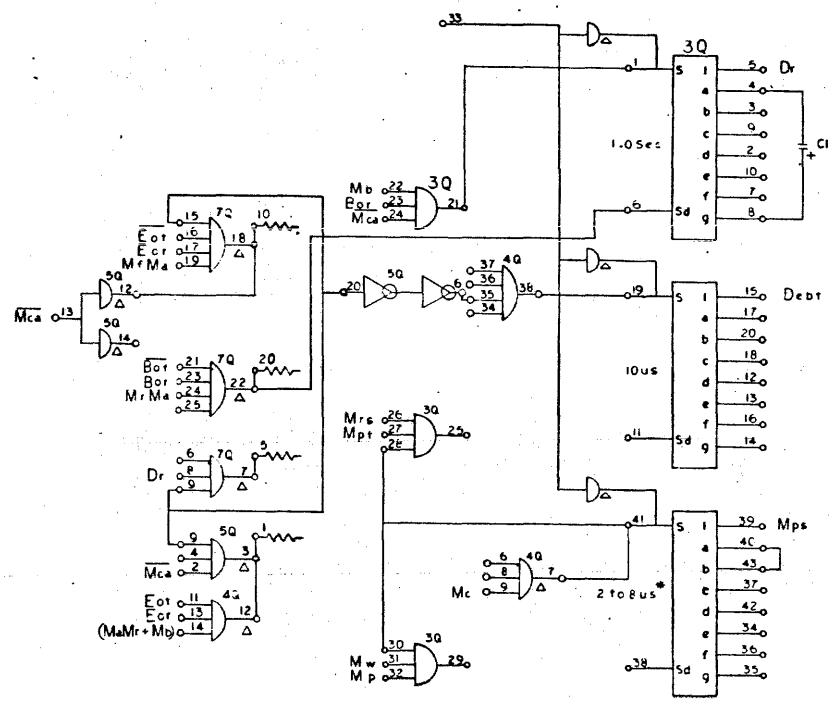

* SEE CALIBRATION PROCEDURE IN TECHNICAL MANUAL

9246A
9246P
TAPE ELECTRONICS
PAGE 5
E

DRAWING NO	DESCRIPTION	REFERENCE DESIGNATION
NOTES UNLESS SPECIFIED	DRAWN	
	CHECK	
	APPR	
MODEL NO 9246	NEXT ASSY	

SDS

DIAGRAM, LOGIC, MAG TAPE UNIT

D 103258 E

103258 E

From	To	Reason
103258D 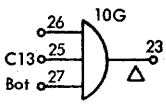 	103258E 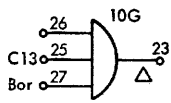 	EO 103404L Bot term replaced by Bor term for early indication of load point.

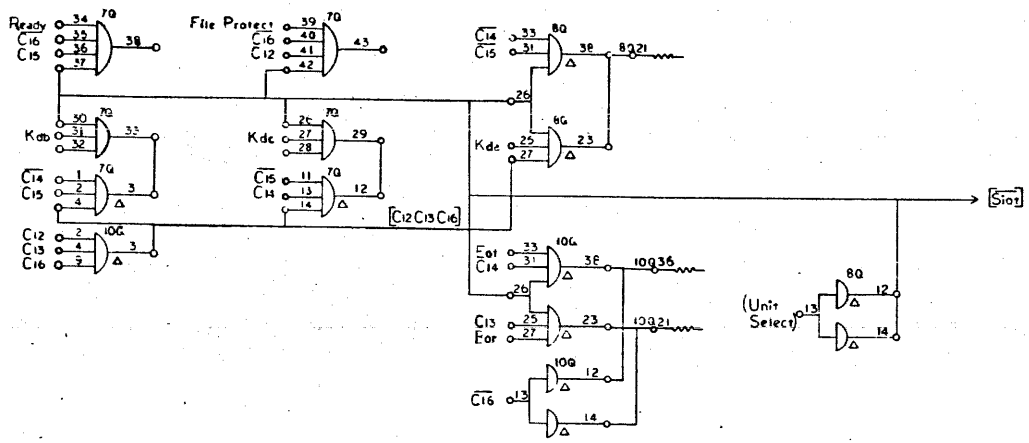

9246A
9246P
TAPE ELECTRONICS
PAGE 7
E

REV	REVISION NO. / DESCRIPTION	DATE	APPROVED
A	REL TO MFG		
C	SEE REV. E.O.		
D	SEE REV. E.O.		
E	SEE REV. E.O.		

NO REQ	DRAWING NO	DESCRIPTION	REFERENCE DESIGNATION	FSCM NO
		MATERIAL LIST		

NOTES UNLESS SPECIFIED

DRAWN
CHECK
APPR

SDS

TITLE: DIAGRAM, LOGIC, MAG TAPE UNIT

MODEL NO: 9246

NEXT ASSY

SIZE D | DWG NO 103258 | E

SCALE | SHEET 7

103258 | F

REV.	DESCRIPTION	DATE	APPROVED
A	REL TO MFG		
C	SEE REV. E.O.		
D	SEE REV E.O.		
E	SEE REV E.O.		

C3258 E

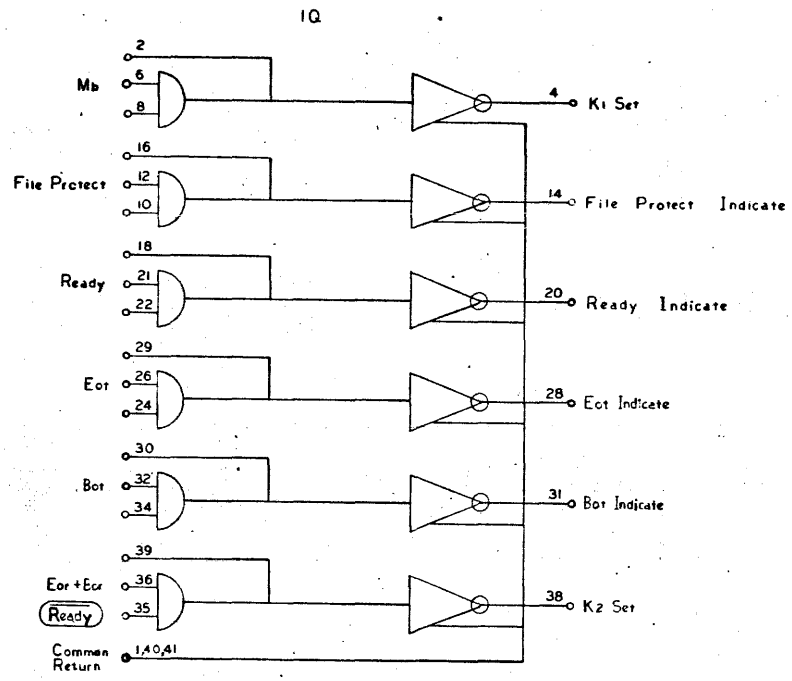

9246A
9246P
TAPE ELECTRONICS
PAGE 8
E

DRAWING NO	DESCRIPTION		
NOTES UNLESS SPECIFIED	DRAWN		SDS
	CHKD	9/2/63	DIAGRAM, LOGIC, MAG TAPE UNIT
	APPD	9/4/63	
MODEL NO 9246			D 103258 E
NEXT ASSY			

The following chart shows the pin numbers for the head wiring on a Potter unit.

(PICO = Potter Instrument Co.)

PICO Channel	PICO Connector	SDS Connector	SDS Channel
1	A - C	7 - 12	7
2	B - D	10 - 15	6
3	E - F	3 - 6	5
4	J - K	9 - 14	4
5	L - M	2 - 5	3
6	R - S	8 - 13	2
7	Y - Z	1 - 4	1
	Blk | Wht	Blk | Wht	

103258

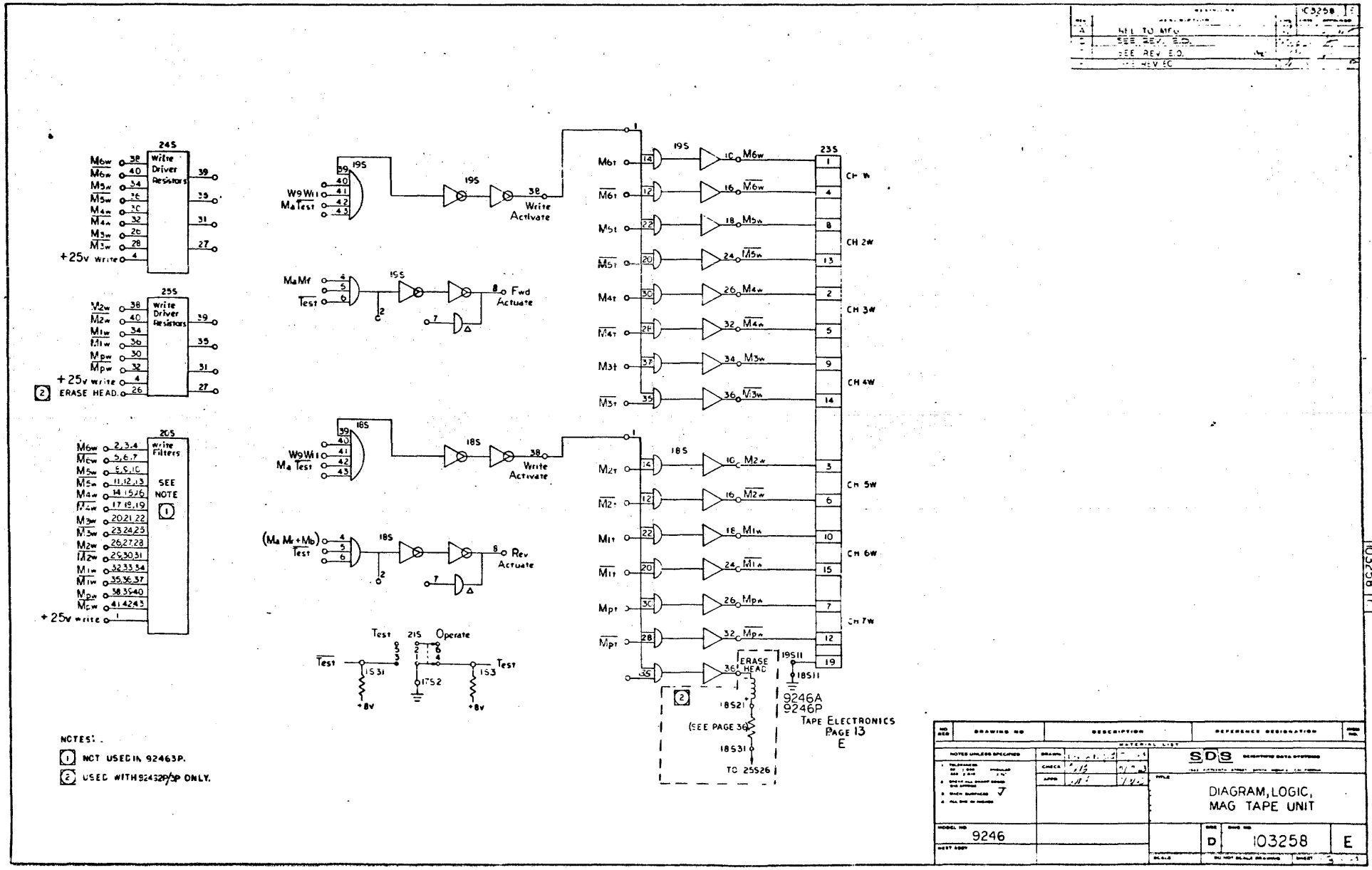

	DRAWING NO	DESCRIPTION	REFERENCE DESIGNATION
		MATERIAL LIST	

NOTES UNLESS SPECIFIED

SDS

DIAGRAM, LOGIC, MAG TAPE UNIT

MODEL NO 9246

D 103258 E

From	To	Reason
103258D 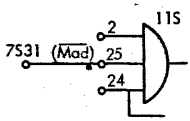 	103258E 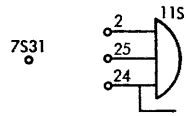 	EO 103404H Eliminates (Mad) Buss. See page 4 addendum for explanation.

REV	REVISION DESCRIPTION	C3256
A	REL TO MFG	
B	SEE DEV. E.O.	
C	SEE REV E.O.	
D	SEE REV E.O.	
E	SEE REV E.O.	

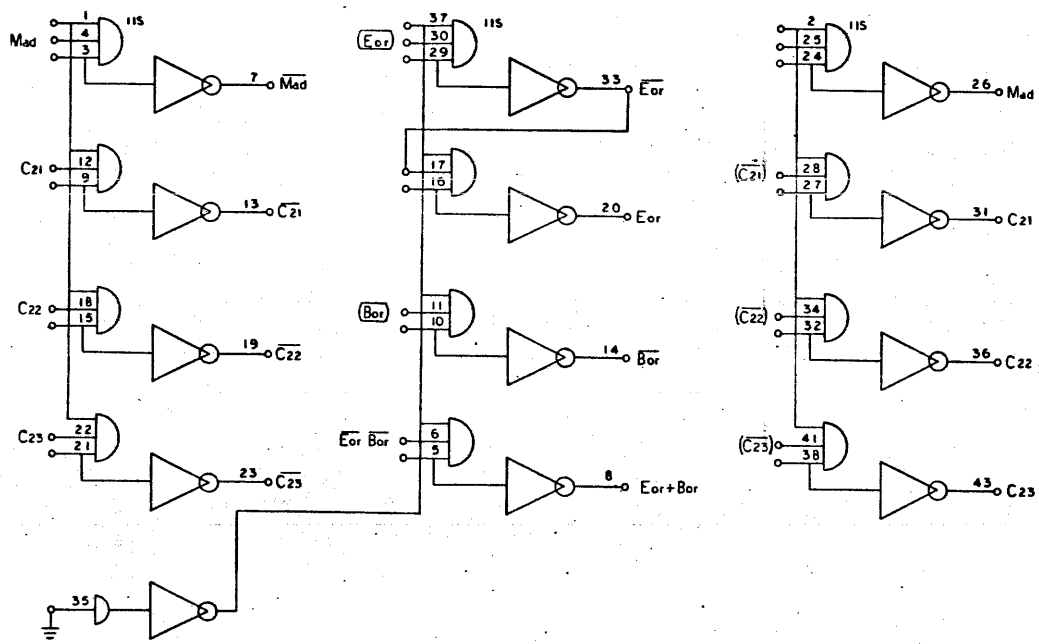

9246A
9246P
TAPE ELECTRONICS
PAGE 22
E

C3256 F

NO REQ	DRAWING NO	DESCRIPTION	REFERENCE DESIGNATION	REQ NOT

MATERIAL LIST

NOTES UNLESS SPECIFIED

1. TOLERANCES
2. BREAK ALL SHARP EDGES
3. MACH. SURFACES
4. ALL DIM IN INCHES

DRAWN		
CHECK		
APPR		

SDS SCIENTIFIC DATA SYSTEMS

TITLE DIAGRAM, LOGIC, MAG TAPE UNIT

MODEL NO 9246

NEXT ASSY

SIZE D | DWG NO 103258 | E

SCALE | SHEET OF NEXT DRAWING | SHEET

From	To	Reason
103258A 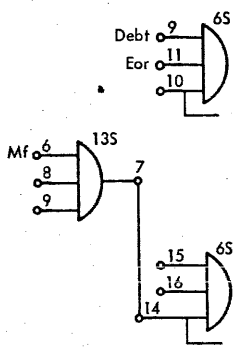 	103258B 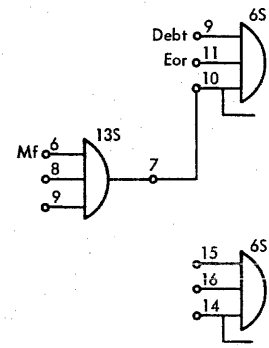 	EO 103404 B Allows Eor interrupt in forward direction only.
103258B 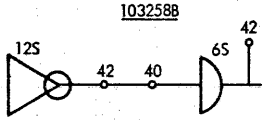 	103258D 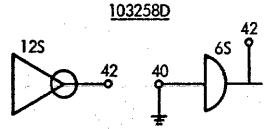 	EO 103404 E Prevents Siot from floating. Eliminating False SKS Answers.
103258D Wires ~~6S2 to 6S3~~ ~~6S7 to 6S8~~ 6S12 to 6S13	103258E Deleted Wires and Added Ground to 6S Pins 1 and 36 from 6S Pin 44	EO 103404 H To allow Logic operation with new ZK57 and ZK58 Terminators. ZK57 - 103471-D ZK58 - 103474-B See Page 40 and 41

REV	DESCRIPTION	DATE	APPROVED
A	REL TO MFG		
B	SEE REV E.O.		
C	SEE REV. E.O.		
D	SEE REV E.O.		
E	SEE REV EO		

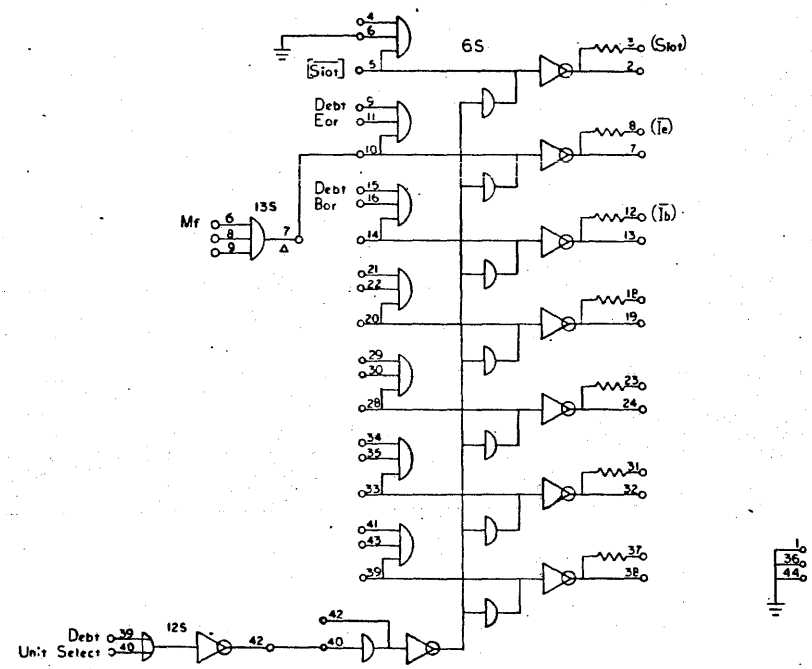

9246A
9246P
TAPE ELECTRONICS
PAGE 23
E

NO REQ	DRAWING NO	DESCRIPTION	REFERENCE DESIGNATION	TYPE NO

NOTES UNLESS SPECIFIED

MATERIAL LIST

DRAWN		
CHECK		
APPR		

SDS

TITLE
DIAGRAM, LOGIC,
MAG TAPE UNIT

MODEL NO 9246

NEXT ASSY

SIZE D | DWG NO 103258 | E

SCALE | DO NOT SCALE DRAWING | SHEET

103258 E

From	To	Reason
103258D	103258E	EO 103404H
Wires		
7S2 to 7S3 7S7 to 7S8 7S12 to 7S13 7S18 to 7S19 7S23 to 7S24 7S31 to 7S32	Deleted wires and added ground to pins 1 & 36 from pin 44.7S	See page 23, Item 3 addendum for explanations.
$(\overline{Mod})$ connected to 7S pin 32	deleted $(\overline{Mod})$ term from 7S pin 32	See Page 4 addendum for explanation.

REV	REVISION	DATE	APPROVED
A	REL TO MFG		
C	SEE REV. E.O.		
D	SEE REV E.O.		
E	SEE REV E.O.		

C3258

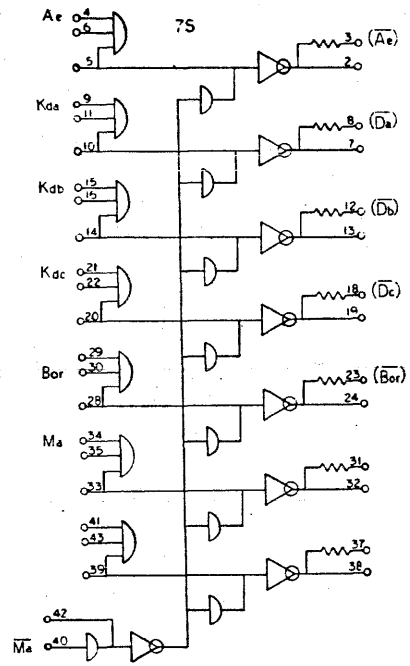

9246A
9246P
TAPE ELECTRONICS
PAGE 24
E

NO REQ	DRAWING NO	DESCRIPTION	REFERENCE DESIGNATION	ITEM NO
		MATERIAL LIST		

NOTES UNLESS SPECIFIED

1. TOLERANCES
2. BREAK ALL SHARP EDGES
3. BREAK SURFACES
4. ALL DIM IN INCHES

DRAWN
CHECK
APPR

SDS

TITLE
DIAGRAM, LOGIC,
MAG. TAPE UNIT

MODEL NO 9246

NEXT ASSY

SIZE D DWG NO 103258 E

SCALE DO NOT SCALE DRAWING SHEET

103258 E

From	To	Reason
103258D	103258E	EO 103404H
Wires 8S2 to 8S3 8S7 to 8S8 8S12 to 8S13 8S18 to 8S19 8S23 to 8S24 8S31 to 8S32 8S37 to 8S38	deleted wires and added ground to 8S pins 1 & 36 from pin 44.	See Page 23 Addendum Item 3 for explanation.

REV	DESCRIPTION	DATE
A	RELEASED	
B	SEE REV. E.O.	
C	SEE REV E.O.	
D	SEE REV E.O.	
E	SEE REV E.O.	

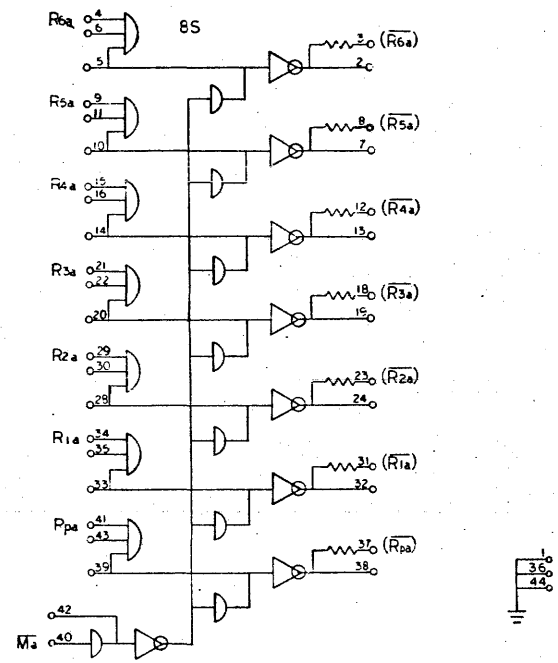

9246A
9246F
TAPE ELECTRONICS
PAGE 25
E

NO REQ	DRAWING NO	DESCRIPTION	REFERENCE DESIGNATION	NEW OLD
		MATERIAL LIST		

NOTES UNLESS SPECIFIED

DRAWN		
CHECK		
APPR		

SDS SCIENTIFIC DATA SYSTEMS

TITLE DIAGRAM, LOGIC, MAG TAPE UNIT

MODEL NO 9246

NEXT ASSY

SIZE D DWG NO 103258 E

SCALE NOT SCALE DRAWING SHEET

C3258 E1

From	To	Reason
103258D	103258E Added Resistors R14 thru R22. 470 ohms ±2% SDS Part #100111-471	EO 103140 Additional pull-up on C lines, to reduce noise.

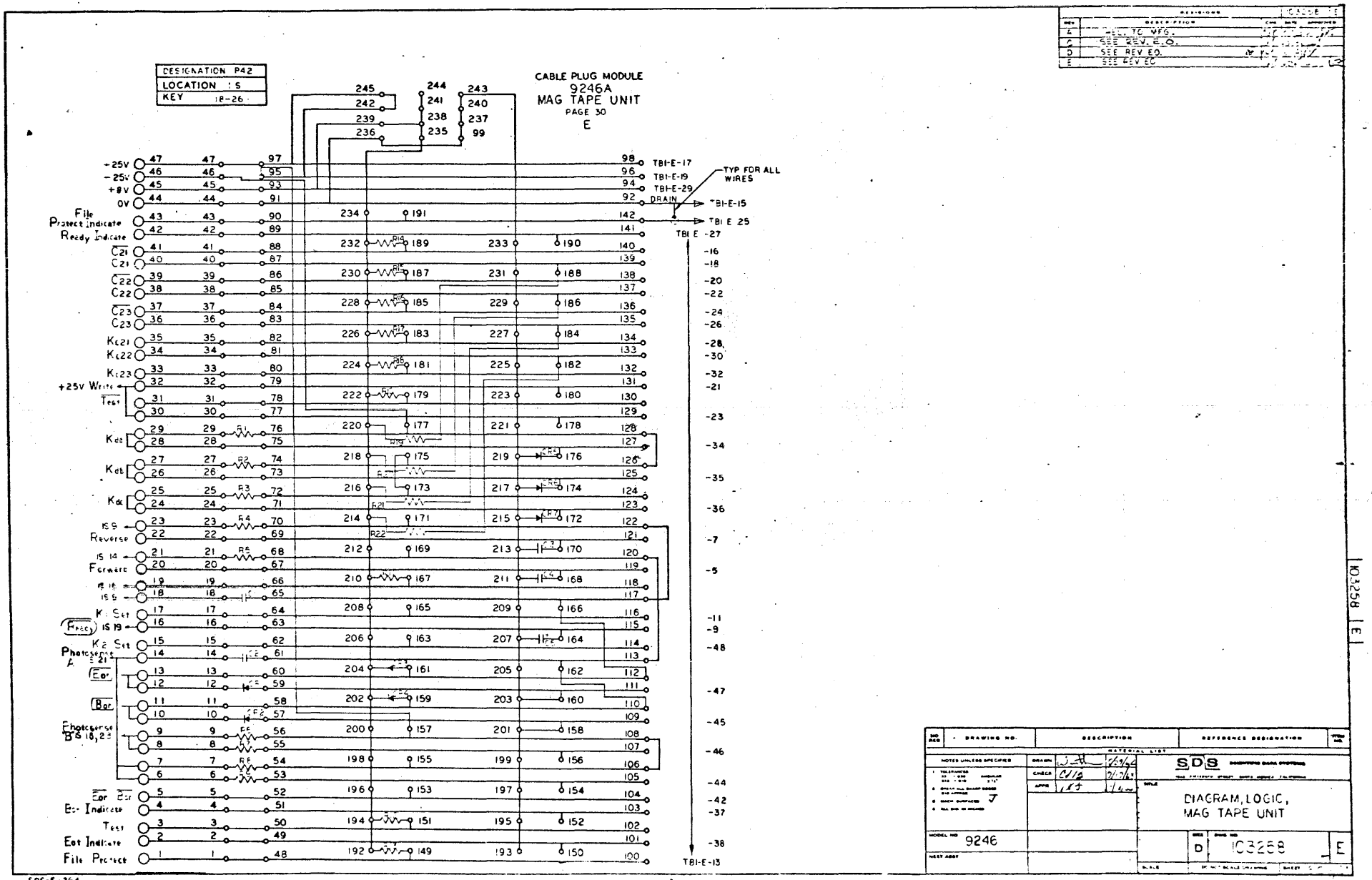
DESIGNATION P42
LOCATION : S
KEY 18-26
CABLE PLUG MODULE
9246A
MAG TAPE UNIT
PAGE 30
E
TYP FOR ALL WIRES
TBI-E-17
TBI-E-19
TBI-E-29
DRAIN
TBI-E-15
TBI E 25
TBI E -27
TBI-E-13
+25V
-25V
+8V
0V
File Protect Indicate
Ready Indicate
+25V Write Test
Reverse
Forward
Photosense
Eot Indicate
Test
Eot Indicate
File Protect
DRAWING NO.
DESCRIPTION
REFERENCE DESIGNATION
MATERIAL LIST
NOTES UNLESS SPECIFIED
SDS
DIAGRAM, LOGIC, MAG TAPE UNIT
MODEL NO 9246
NEXT ASSY
D
103258
E
SDS-E-264

From	To	Reason
Pin 27 of P43 ($\overline{Mad}$) signal.	Deleted ($\overline{Mad}$) signal from pin 27 of P43. Add +8v to pin 27 of P43.	Coordinate with EO 103404H. See Page 23 Addendum Item 3 for explanation.

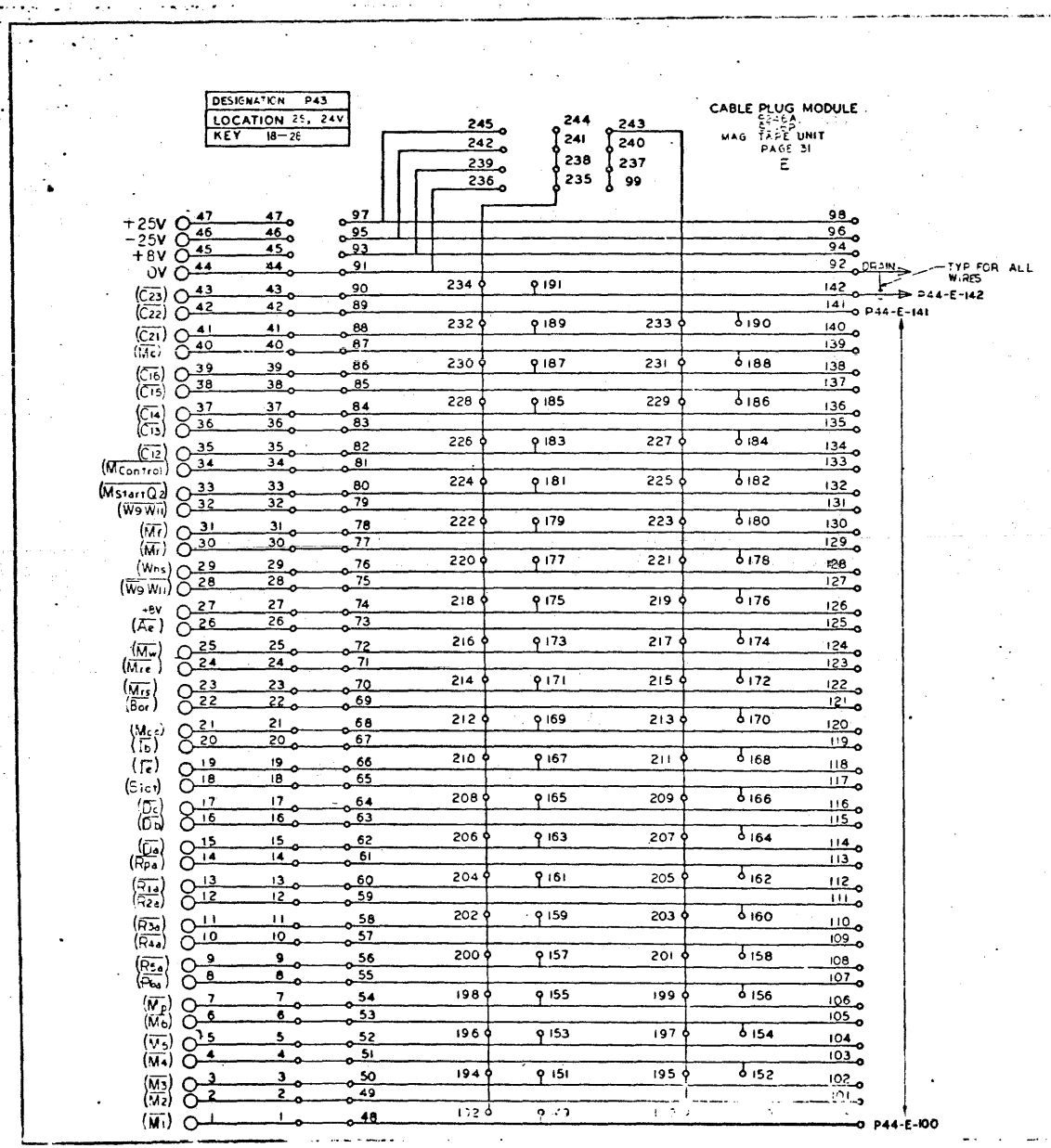

REV	DESCRIPTION	DATE	CHK	APPD
A	PER EO [illegible]			
B	SEE REV E.O.			
C	SEE REV E.O.			
D	SEE REV E.O.			

NO REQ	DRAWING NO	DESCRIPTION	REFERENCE DESIGNATION	FIND NO
	MATERIAL LIST			

NOTES UNLESS SPECIFIED

1. [illegible]
2. [illegible]
3. [illegible]
4. [illegible]
5. [illegible]

SDS

TITLE

DIAGRAM, LOGIC, MAG TAPE UNIT

MODEL NO 9246

SIZE D | DWG NO 103258 | E

SCALE | DO NOT SCALE | SHEET

103258 | E

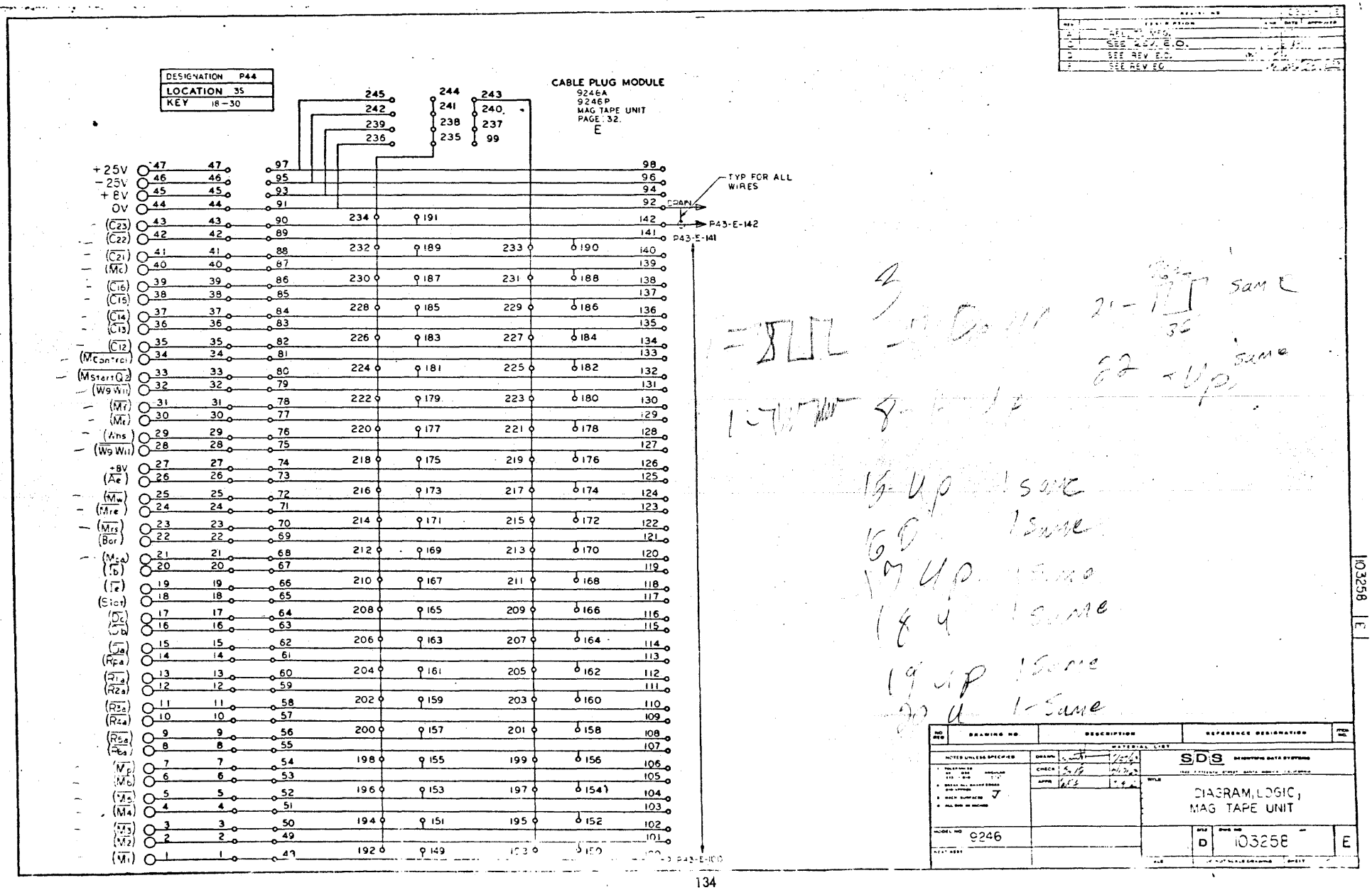
DESIGNATION P44
LOCATION 3S
KEY 18-30
CABLE PLUG MODULE
9246A
9246P
MAG TAPE UNIT
PAGE 32.
E
TYP FOR ALL WIRES
DRAIN
P43-E-142
P43-E-141
P43-E-100
+25V
-25V
+8V
0V
SDS
DIAGRAM, LOGIC, MAG TAPE UNIT
9246
103258
D
E

REV	DESCRIPTION	DATE	APPROVED
A	REL TO MFG		
C	SEE REV. E.O.		
D	SEE REV E.O.		
E	SEE REV EC		

C3258

	1	2	3	4	5	6	7	8	9	10	11	12	13	14	15	16	17	18	19	20	21	22	23	24	25	
Q	RX 10	FH 17	OX 13	GC 10	BC 10	IH 12	GC 10	BC 10	IC 12	BC 10	BC 10	GC 11		OX 13	OX 13	OX 13	OX 13	OX 13	HK60	HK60	HK60	HK60	HK60	HK60	HK60	Q
S	P42 ('A' UNITS) P70 ('P' UNITS)	P43 ZK57	P44	ZK 58	HX20 (NOT USED ON 'P' UNITS)	AX 14	AX 14	AX 14			IC 12	IC 12	GC 10	OX 13	OX 13	FC 17	FC 17	AK 52	AK 52	ZK56 NOT USED ON 9246 P				ZK 51 ZK67 ZK68 ~~P3~~	ZK 51 ZK67 ZK68 ~~P3~~	S
Q		FC17	OX11			IC12								OX11	OX11	OX11	OX11	OX11								Q
S														OX11	OX11											S

ZK51 MODULES TO BE REPLACED FOR 800 BPI OPERATION.
ZK67 FOR "P" UNITS WITH ERASE HEADS.
ZK68 FOR "A" OR "P" UNITS WITHOUT ERASE HEADS.

MODULES IDENTIFIED WERE USED IN EARLY 9246A UNITS.

9246A
9246P

TAPE ELECTRONICS
PAGE 33
E

NO REQ	DRAWING NO	DESCRIPTION	REFERENCE DESIGNATION	FIND NO
		MATERIAL LIST		

NOTES UNLESS SPECIFIED

SDS SCIENTIFIC DATA SYSTEMS

DRAWN
CHECK
APPR

TITLE
DIAGRAM, LOGIC, MAG TAPE UNIT

MODEL NO 9246

NEXT ASSY

SIZE D DWG NO 103258 E

DO NOT SCALE DRAWING SHEET 33 OF 34

103258 E

REVISIONS				103258 E
REV	DESCRIPTION		DATE	APPROVED
A	REL TO MFG			
C	SEE REV. E.O.			
D	SEE REV E.O.			
E	SEE REV EC			

MODULE LIST

ITEM	DESCRIPTION	MODEL	QTY.
1	WRITE DRIVER	AK52	2
2	CABLE DRIVER	AX14	3
3	AND/OR BUFFER AMP	BC10	4
4	UNIVERSAL F.F.	FC17	2
5	GATE EXPANDER	GC10	3
6	GATE EXPANDER	GC11	1
7	OPERATIONAL AMP	HX20-0	1
8	READ AMP	HK60	7
9	AND INVERTER	IC12	3
10	ONE SHOT MULT.	OX13	8
11	RELAY DRIVER	RX10	1
12	RESISTOR	ZK68	2
13	TERM. MODULE	ZK56	1
14	TERM. MODULE	ZK57	1
15	TERM. MODULE	ZK58	1
16	AND INVERTER	IH12	1
17	UNIVERSAL F.F.	FH17	1

REPLACEMENT PARTS LIST

ITEM	DESCRIPTION	DESIGNATION	QTY.	SUPPLIER CODE SEE INDEX)
1	RESISTOR, 3.3 K ± 2%	(P42) R1, R2, R3	3	16,17
2	1 MEG Ω	(P42) R4, R5, R6, R8	4	16,17
3	1 K	(P42) R7, R9	2	16,17
4	RESISTOR, 8.2 K ± 2%	(P42) R10, R11, R12, R13	4	16,17
5	CAPACITOR, MYLAR .0033 μF ± 10%	(P42) C1, C2	2	26,27,74
6	CAPACITOR MYLAR .0068 μF ± 10%	(P42) C3, C4	2	26,27,74
7	CAPACITOR, TANTALUM .47 μF ± 20% 50V	(P42) C5	1	23,77
8	DIODE, SILICON SWITCHING 1N914A	(P42) CR1 THRU CR7	7	4,12,13,14
9	CONNECTOR SOLDERTAIL 47 CONTACT # 7005-47	J(1Q) THRU J(25Q) J(1S) THRU J(20S) J(24S), J(25S)	47	82
10	RESISTOR, 1.8 K ± 2%	(TB2) R1	1	16,17
11	15 K	(TB2) R2	1	
12	180 Ω	(TB2) R3	1	
13	390 Ω	(TB2) R4, R5, R6	3	
14	RESISTOR, 470 Ω ± 2%	(TB2) R7, R8, R9 (P42) R14 THRU R22	12	16,17
15	DIODE, VOLTAGE REGULATOR 1N752	(TB2) VR1	1	2,12,13,14
16	DIODE, VOLTAGE REGULATOR 1N964A	(TB2) VR2, VR3, VR4	3	2,6,14,65
17	CAPACITOR, TANTALUM 4.7 μF ± 20% 50V	(TB2) C1	1	23,77
18	TRANSISTOR, SILICON SWITCHING 2N1132	(TB2) Q1	1	3,10,11
19	RECEPTACLE, 19 PIN # 25K19-31SL	J1	1	134
20	PLUG, 19 PIN # SK19-32S	J2	1	134
21	SWITCH, ROTARY # 102163	S1, S2	2	SDS
22	LAMP, INCANDESCENT # 47	DS1 THRU DS5	5	84
23	RESISTOR, WW 10 Ω ± 5%	R1 THRU R5	5	59,100
24	RELAY, DPDT # DOSX-7T # 80-6A/115 VAC	K1 THRU K4	4	78 79
25	SWITCH, TOGGLE DPDT # 53054-5E	S1(S)	1	106
26	CAPACITOR, TANTALUM 4.7 μF ± 20% 50V	C1(Q)	1	23,77

9246A,
MAG TAPE UNIT
PAGE 34
E

NO REQ	DRAWING NO	DESCRIPTION	REFERENCE DESIGNATION	SPEC NO
		MATERIAL LIST		

NOTES UNLESS SPECIFIED

DRAWN / CHECK / APPR

SDS

TITLE
DIAGRAM, LOGIC
MAG TAPE UNIT

MODEL NO 9246

NEXT ASSY

SIZE D | DWG NO 103258 | E

SCALE | DO NOT SCALE DRAWING | SHEET 34 of 35

103258 E

REVISIONS		103258
REV	DESCRIPTION	CHK DATE APPROVED
C	SEE REV. E.O.	
D	SEE REV E.O.	
E	SEE REV E.O.	

NOTES UNLESS OTHERWISE SPECIFIED

1. RECEPTACLES J1 & J2 ARE PROVIDED FOR CONNECTION TO THE READ & WRITE HEADS OF THE MAG TAPE UNIT.
2. RECEPTACLE J(1S) IS PROVIDED FOR P7O FROM CONTROL PANEL.
3. RECEPTACLE J(3S) IS PROVIDED FOR THE P44 TO P43 CABLE. P43 CONNECTS TO RECEPTACLE J(24V) OF THE MODEL 9248 CONTROL UNIT OR TO J(2S) OF A SECOND MODEL 9246.
4. USED ON 9246P/E ONLY, RESISTOR 10068C-750. WITH ERASE HEADS

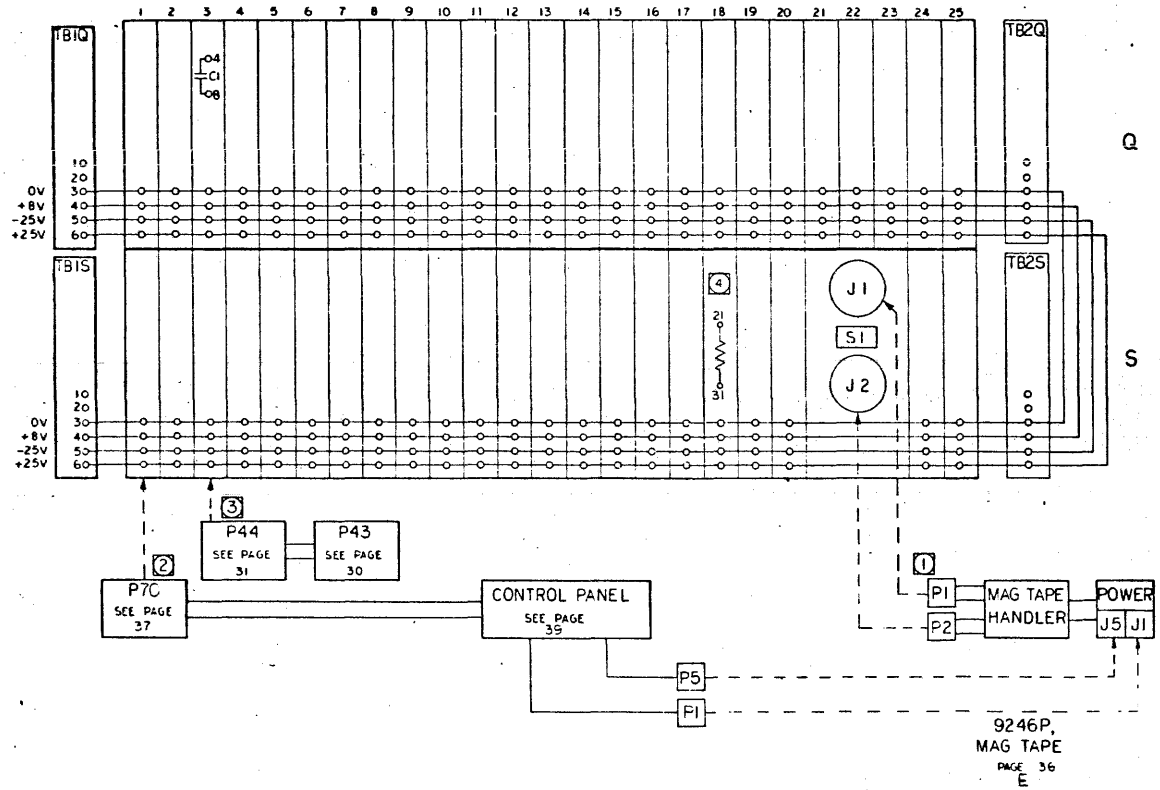

NO REQ	DRAWING NO	DESCRIPTION	REFERENCE DESIGNATION
		MATERIAL LIST	

NOTES UNLESS SPECIFIED

SDS SCIENTIFIC DATA SYSTEMS

TITLE DIAGRAM, LOGIC MAG TAPE

MODEL NO 9246

SIZE D DWG NO 103258 E

SCALE DO NOT SCALE DRAWING SHEET

103258 E

Potter

Addendum

From	To	Reason
103258D	103258E Added Resistors R11 thru R19. 470 ohms ±2% SDS Part #100111-471	EO 103140 Additional pullups on C lines to reduce noise.

REV	DESCRIPTION	CHK	DATE	APPROVED
C	SEE REV. E.O.			
D	SEE REV E.O.			
E	SEE REV EC			

DESIGNATION	P70
LOCATION	1S
KEY	18-26

CABLE PLUG MODULE
,9246P,
MAG TAPE UNIT
PAGE 37
E

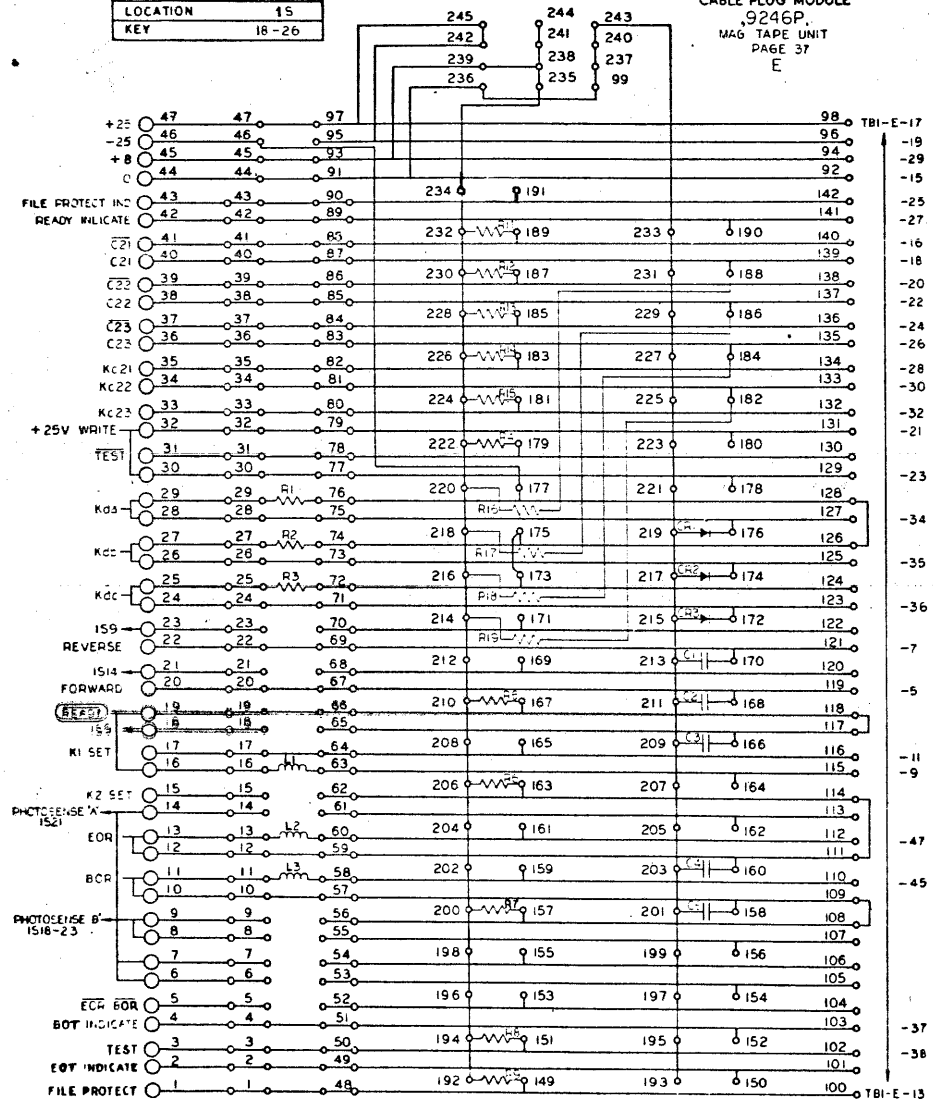

POTTER

NO REQ	DRAWING NO	DESCRIPTION	REFERENCE DESIGNATION	ITEM NO
		MATERIAL LIST		

NOTES UNLESS SPECIFIED

1. TOLERANCES
2. BREAK ALL SHARP EDGES
3. BREAK SURFACES
4. ALL DIM IN INCHES

DRAWN
CHECK
APPR

SDS SCIENTIFIC DATA SYSTEMS

TITLE
DIAGRAM, LOGIC
MAG TAPE UNIT

MODEL NO 9246

NEXT ASSY

SIZE D DWG NO 103258 E

SCALE

SHEET 37

103258 E

SDS-E-204

REVISIONS				103257 F
REV	DESCRIPTION	CHK	DATE	APPROVED
A	PEL TO MFG			
B	SEE REV. E.O.			
C	SEE REV. E.O.			
D	SEE REV. E.O.			
E	SEE REV. E.O.			
F	SEE REV. E.O.			

PAGE	CHG	PAGE	CHG	PAGE	CHG	PAGE	CHG	PAGE	CHG
1	E								
2	E								
3	E								
4	E								
5	E								
6*	E								
7**	E								
8	E								
9	E								
10	E								
11	E								
12	E								
13	E								
14	E								
15	E								
16	E								
17	E								
18	E								
19	E								
20	E								
21	E								
22	E								
23	E								
24	E								
25	E								
26	E								
27	E								
28	E								
29	E								
30	E								
31	E								
32	E								
33	E								
34	E								
35	E								
36	E								
37	D								
38	D								
39	F								
40	F								

NOTES:
1. REV LETTERS LISTED INDICATE STATUS OF EACH SHEET OF THIS MULTIPLE SHEET DRAWING.
2. CHECK INDIVIDUAL SHEETS FOR REVISION LETTER AGAINST THIS SHEET BEFORE USING THIS DRAWING.

* NOT USED ON 92481.

** NOT USED ON 92481, 9248.

REFERENCE DESIGNATIONS ARE ABBREVIATED. PREFIX THE DESIGNATION WITH UNIT NUMBER OR ASSEMBLY DESIGNATION OR BOTH. (MIL. STD. 168)

9348,
92483,9248,92481,92482
MAG TAPE CONTROL UNIT
PAGE 1
E

109

NO. REQ	DRAWING NO.	DESCRIPTION	REFERENCE DESIGNATION	NOTE NO.
		MATERIAL LIST		

NOTES UNLESS "OTHERWISE" SPECIFIED
1. DIMENSIONS ARE IN INCHES ANGULAR ±1/2°
2. BREAK ALL SHARP EDGES AND CORNERS
3. MARK PARTS PER
4. ALL SIZE IN INCHES

DRAWN 7/1/72
CHECK
APPR

SDS SCIENTIFIC DATA SYSTEMS
MAIN FACILITY: 701 WEST SANTA MONICA, CALIFORNIA

TITLE
DIAGRAM, LOGIC
MAG TAPE CONTROL UNIT

MODEL NO. 9248
NEXT ASSY

SIZE D | DWG NO. 103257 | F

SCALE | DO NOT SCALE DRAWING | SHEET 1 OF 40

REV	DESCRIPTION
A	REL TO NEO.
D	SEE REV E.O.
E	SEE REV EO
F	SEE REV E.O.

	1	2	3	4	5	6	7	8	9	10	11	12	13	14	15	16	17	18	19	20	21	22	23	24	25	
K	FH17	DX13	DX13	DC12	FH17	IC13	BH10	FH15	DX14	GH10	GH10	IC12	FH15	FH15	FH17	FC17	GH10	GH10	FH17	FH17	IC10	GC10	GC10	GH11	IK52	K
V	CX13 [2] [1]	CX14 [2] [1]	CX13 [1]	CX13 [1]	CK52 [4]	DX13	SK59	FC10	IC12	FH11	FC12	IH12	GC10	IH12	FC10	IH12	IC12	AX16	AX16	AX16	AX16	AX16	AX16	AX14	P43	P41	V

[1] NOT USED ON 92481. [2] NOT USED ON 9248.

[4] CK55 USED 9348, CK56 USED ON 92483.

9348,
92483,
92482,
92481,
9248

TAPE CONTROL
PAGE 39
E

AD REQ	DRAWING NO	DESCRIPTION	REFERENCE DESIGNATION	SYSTEM NO.
	MATERIAL LIST			

NOTED UNLESS SPECIFIED

DRAWN
CHECK
APPR

SDS

TITLE
DIAGRAM, LOGIC,
MAG TAPE CONTROL UNIT

MODEL NO 9248

NEXT ASSY

SIZE D DWG NO 103257 F

SCALE DO NOT SCALE DRAWING SHEET 35 OF 40

REVISIONS		103257 F		
REV.	DESCRIPTION	CHK	DATE	APPROVED
A	REL TO MFG			
D	SEE REV E.O.			
E	SEE REV E.O.			
F	SEE REV E.O.			

MODULE LIST

ITEM	DESCRIPTION	MODEL	QTY 9248	92481	92482	92483	±348
1	CABLE DRIVER	AX14	2	2	2	2	2
2	AND/OR BUFFER AMP	BC10	3	3	3	3	3
3	AND/OR BUFFER AMP	BH10	1	1	1	1	1
4	OR GATE BUFFER AMP	BH11	1	1	1	1	1
5	CRYSTAL CLOCK GEN	CX13	1	–	2	2	2
6	COUNTER F.F.	FH15	3	3	3	3	3
7	UNIVERSAL F.F.	FH17	5	5	5	5	5
8	GATE EXPANDER	GH11	1	1	1	1	1
9	GATE EXPANDER	GC10	3	8	8	8	8
10	AND/OR INVERT.	IC10	2	2	2	2	2
11	AND INVERTER	IC12	4	4	4	4	4
12	AND INVERTER	IH12	2	2	2	2	2
13	ADDER MODULE	IK52	1	1	1	1	1
14	ONE SHOT MULT.	OX13	4	3	4	4	4
15	CLOCK & GAP DETECTER	SK53	1	1	1	1	1
16	UNIVERSAL F.F.	FC17	1	1	1	1	1
17	ONE SHOT MULT.	OX14	1	1	2	2	2
18	CLOCK GEN.	CK52	1	1	1	–	–
19	CLOCK GEN	CK55	–	–	–	–	1
20	CLOCK GEN	CK56	–	–	–	1	–
21	CABLE DRIVER	AX.6	4	4	4	4	4

REPLACEMENT PARTS LIST

ITEM	DESCRIPTION	DESIGNATION	QTY	SUPPLIER CODE (SEE INDEX)
1	RESISTOR, 470 Ω ± 2%	(P40) R27 THRU R38	12	16, 17
2	INDUCTOR, MOLDED 220 μH ±5%	(P40) L1 THRU L26 (P41) L1 THRU L14	40	42, 90, 91
3	DIODE, SILICON SWITCHING IN 914A	(P40) CR1 THRU CR11	11	4, 12, 13, 14
4	CONNECTOR, SOLDERTAIL AT CONTACT #700B-AT	J(X) THRU J(25X) J(Y) THRU J(25Y)	50	62

ITEM	DESCRIPTION	CABLE LENGTH 11'	26'	30'	40'	DESIGNATION	QTY	SUPPLIER CODE (SEE INDEX)
5	RESISTOR	330 Ω ± 2%	330 Ω ± 2%	270 Ω ± 2%	220 Ω ± 2%	(P40) R1 THRU R26 (P41) R1 THRU R14	40	16, 17

9348,
92483, 9248, 92481, 92482
MAG TAPE CONTROL UNIT
PAGE 40
E

ITEM NO.	DRAWING NO	DESCRIPTION	REFERENCE DESIGNATION	SPARE NO.
		MATERIAL LIST		

NOTED UNLESS SPECIFIED

1. [illegible]
2. [illegible]
3. [illegible]
4. [illegible]
5. [illegible]

DRAWN [illegible] 2/1/6[illegible]
CHECK [illegible] 2/1/6[illegible]
APPD. [illegible] 2/1/6[illegible]

TITLE DIAGRAM, LOGIC
MAG TAPE CONTROL UNIT

MODEL NO. 9248
NEXT ASSY.

SIZE D DWG NO 103257 REVISION LETTER F

SCALE DO NOT SCALE DRAWING SHEET 40 OF 40

103257 F

REV.	DESCRIPTION	CHK	DATE	APPROVED
A	REL TO MFG			
B	SEE REV. E.O.			
C	SEE REV E.O.			
D	SEE SEE E.O.			
E	SEE REV EO			
F	SEE REV E.O.			

NOTE:

THIS DWG APPLIES TO BOTH THE AMPEX (A) & POTTER (P) MAG TAPE UNITS. FOR SIMPLICITY ONLY 9246A AND/OR 9246P DESIGNATIONS ARE SHOWN ON INDIVIDUAL PAGES. 9246A IMPLIES 9246A, 9246IA, 92462A, & 9346A. 9246P IMPLIES 9246P, 9246IP, 92462P & 92463P. THE FOLLOWING CHART INDICATES THE EFFECTIVITY OF INDIVIDUAL PAGES.

PAGE	CHG	PAGE	CHG	PAGE	CHG	PAGE	CHG	PAGE	CHG
1	F								
2	D								
3	D								
4	E								
5	E								
6	D								
7	E								
8	E								
9	D								
10	D								
11	D								
12	D								
13	E								
14	D								
15	D								
16	D								
17	C								
18	D								
19	D								
20	C								
21	D								
22	E								
23	E								
24	E								
25	E								
26	D								
27	D								
28	C								
29	C								
30	E								
31	E								
32	E								
33	F								
34	F								
35	D								
36	E								
37	E								
38	F								
39	D								

NOTES:
1. REV LETTERS LISTED INDICATE STATUS OF EACH SHEET OF THIS MULTIPLE SHEET DRAWING.
2. CHECK INDIVIDUAL SHEETS FOR REVISION LETTER AGAINST THIS SHEET BEFORE USING THIS DRAWING.

REFERENCE DESIGNATIONS ARE ABBREVIATED. PREFIX THE DESIGNATION WITH UNIT NUMBER OR ASSEMBLY DESIGNATION OR BOTH. (MIL. STD. 16B)

PAGE NO.	AMPEX ONLY	POTTER ONLY	BOTH	92462P/3P VARIATIONS
1			X	
2	X			
3			X	
4			X	
5			X	
6			X	
7			X	
8			X	
9			X	
10			X	
11			X	
12			X	
13			X	X
14			X	
15			X	
16			X	
17			X	
18			X	
19			X	
20			X	
21			X	
22			X	
23			X	
24			X	
25			X	
26			X	X
27	X			
28	X			
29	X			
30	X			
31			X	
32			X	
33			X	
34	X			
35	X			
36		X		X
37		X		
38		X		
39		X		

9246A,9246P

MAG TAPE UNIT
PAGE 1
F

NO. REQ	DRAWING NO.	DESCRIPTION	REFERENCE DESIGNATION	FSCM NO.

MATERIAL LIST

NOTES UNLESS SPECIFIED

DRAWN
CHECK
APPR

SDS

TITLE
DIAGRAM, LOGIC
MAG TAPE UNIT

MODEL NO. 9246

NEXT ASSY.

SIZE D | DWG NO. 103258 | F

SCALE | DO NOT SCALE DRAWING | SHEET 1 OF 33

REV	DESCRIPTION	C3256
A	REL TO MFG	
C	SEE ZZV. E.O.	
D	SEE REV E.O.	
E	SEE REV E.O.	
F	SEE REV E.O.	

	1	2	3	4	5	6	7	8	9	10	11	12	13	14	15	16	17	18	19	20	21	22	23	24	25	
G	RX 10	F-17	OX 13	GC 10	BC 10	IH 12	GC 10	BC 10	IC 12	BC 10	BC 10	GC 11		OX 13	OX 13	OX 13	OX 13	OX 13	HK60	HK60	HK60	HK60	HK60	HK60	HK60	Q
S	P42 (A UNITS) P70 (P UNITS)	P43 ZK57	P44	ZK 58	HX20 (NOT USED ON P UNITS)	AX16	AX16	AX16			IC 12	IC 12	GC 10	OX 13	OX 13	FC 17	FC 17	AK52	AK52	ZK56				ZK 51	ZK 51	S

9246A
9246P

TAPE ELECTRONICS
PAGE 33
F

NO REQ	DRAWING NO	DESCRIPTION	REFERENCE DESIGNATION	ITEM NO

NOTES UNLESS SPECIFIED

MATERIAL SIZE

DRAWN
CHECK
APPR

SDS

TITLE
DIAGRAM, LOGIC,
MAG TAPE UNIT

MODEL NO 9246

NEXT ASSY

SIZE D | DWG NO 103258 | F

SCALE | DO NOT SCALE DRAWING | SHEET 33 OF 39

103258 F

REV	DESCRIPTION	CHK	DATE	APPROVED
A	REL TO MFG			
C	SEE REV. E.O.			
D	SEE REV E.O.			
E	SEE REV EO			
F	SEE REV E.O.			

MODULE LIST

ITEM	DESCRIPTION	MODEL	QTY.
1	WRITE DRIVER	AK52	2
2	CABLE DRIVER	AX16	3
3	AND/OR BUFFER AMP	BC10	4
4	UNIVERSAL F.F.	FC17	2
5	GATE EXPANDER	GC10	3
6	GATE EXPANDER	GC11	1
7	OPERATIONAL AMP	HX20-0	1
8	READ AMP	HK60	7
9	AND INVERTER	IC12	3
10	ONE SHOT MULT.	OX13	8
11	RELAY DRIVER	RX10	1
12	RESISTOR	ZK51	2
13	TERM. MODULE	ZK56	1
14	TERM. MODULE	ZK57	1
15	TERM. MODULE	ZK58	1
16	AND INVERTER	IH12	1
17	UNIVERSAL F.F.	FH17	1

REPLACEMENT PARTS LIST

ITEM	DESCRIPTION	DESIGNATION	QTY.	SUPPLIER CODE (SEE INDEX)
1	RESISTOR, 3.3 K ± 2%	(P42) R1, R2, R3	3	16,17
2	1 MEG Ω	(P42) R4, R5, R6, R8	4	16,17
3	1 K	(P42) R7, R9	2	16,17
4	RESISTOR, 8.2 K ± 2%	(P42) R10, R11, R12, R13	4	16,17
5	CAPACITOR, MYLAR .0033 μF ± 10%	(P42) C1, C2	2	26,27,74
6	CAPACITOR, MYLAR .0068 μF ± 10%	(P42) C3, C4	2	26,27,74
7	CAPACITOR, TANTALUM .47 μF ± 20% 50V	(P42) C5	1	23,77
8	DIODE, SILICON SWITCHING 1N914A	(P42) CR1 THRU CR7	7	4,12,13,14
9	CONNECTOR, SOLDERTAIL 47 CONTACT # 7008-47	J(1Q) THRU J(25Q) J(1S) THRU J(20S) J(24S), J(25S)	47	82
10	RESISTOR, 1.8 K ± 2%	(TB2) R1	1	16,17
11	15 K	(TB2) R2	1	
12	180 Ω	(TB2) R3	1	
13	390 Ω	(TB2) R4, R5, R6	3	
14	RESISTOR, 470 Ω ± 2%	(TB2) R7, R8, R9 (P42) R14 THRU R22	12	16,17
15	DIODE, VOLTAGE REGULATOR 1N752	(TB2) VR1	1	2,12,13,14
16	DIODE, VOLTAGE REGULATOR 1N964A	(TB2) VR2, VR3, VR4	3	2,6,14,65
17	CAPACITOR, TANTALUM 4.7 μF ± 20%, 50V	(TB2) C1	1	23,77
18	TRANSISTOR, SILICON SWITCHING 2N1132	(TB2) Q1	1	3,10,11
19	RECEPTACLE, 19 PIN # RSK 19-31SL	J1	1	134
20	PLUG, 19 PIN # SK19-32S	J2	1	134
21	SWITCH, ROTARY # 102163	S1, S2	2	SDS
22	LAMP, INCANDESCENT # 47	DS1 THRU DS5	5	84
23	RESISTOR, WW 10 Ω ± 5%	R1 THRU R5	5	99,100
24	RELAY, DPDT # DOSX-7T # 80-6A/115 VAC	K1 THRU K4	4	78 79
25	SWITCH, TOGGLE DPDT # 83054-SE	S1(S)	1	106
26	CAPACITOR, TANTALUM 4.7 μF ± 20% 50V	C1(Q)	1	23,77

9246A,
MAG TAPE UNIT
PAGE 34
F

NO REQ	DRAWING NO.	DESCRIPTION	REFERENCE DESIGNATION	ITEM NO.

MATERIAL LIST

NOTES UNLESS SPECIFIED

DRAWN / CHECK / APPR

SDS

TITLE
DIAGRAM, LOGIC
MAG TAPE UNIT

MODEL NO 9246

SIZE D DWG NO 103258 F

SCALE DO NOT SCALE DRAWING SHEET 3 OF 30

103258 F

REVISIONS				
REV.	DESCRIPTION	CHK	DATE	APPROVED
C	SEE REV. E.O.			
D	SEE REV. E.O.			
E	SEE REV. E.O.			
F	SEE REV. E.O.			

MODULE LIST

ITEM	DESCRIPTION	MODEL	QTY
1	WRITE DRIVER	AK52	2
2	CABLE DRIVER	AX16	3
3	AND/OR BUFFER AMP	BC10	4
4	UNIVERSAL F.F.	FC17	2
5	GATE EXPANDER	GC10	3
6	GATE EXPANDER	GC11	1
7	READ AMP	HK60	7
8	AND INVERTER	IC12	3
9	ONE SHOT MULT.	OX13	8
10	RELAY DRIVER	RX10	1
11	RESISTOR	ZK51	2
* 12	TERM. MODULE	ZK56	1
13	TERM. MODULE	ZK57	1
14	TERM. MODULE	ZK58	1
15	AND INVERTER	IH12	1
16	UNIVERSAL F.F.	FH17	1

REPLACEMENT PARTS LIST

ITEM	DESCRIPTION	DESIGNATION	QTY.	SUPPLIER'S CODE (CODE IDENT NO)
1	RESISTOR, 3.3 K ± 2%	(P70) R1, R2, R3	3	16, 17
2	RESISTOR, 1.0 K ± 2%	(P70) R6, R7	2	16, 17
3	RESISTOR, 8.2 K ± 2%	(P70) R4, R5, R9	3	16, 17
4	CAPACITOR, MYLAR .0010 µF ± 10%	(P70) C1, C2	2	26, 27, 74
5	CAPACITOR, MYLAR .0010 µF ± 10%	(P70) C4, C6	2	26, 27, 74
6	DIODES, SILICON SWITCHING 1N914A	(P70) CR1 THRU CR3	3	4, 12, 13, 14
7	INDUCTOR, MOLDED 150.0 µH ± 5%	(P70) L2, L3	2	42, 90, 91
8	RECEPTACLE, 19 PIN #SCR 19-315G	J1	1	134
9	PLUG, 19 PIN #SC19-32G	J2	1	134
10	SWITCH, ROTARY #102163	S101, S102	2	SDS
11	RESISTOR, WW 10 Ω ± 5%	R1 THRU R5	5	99, 100
12	RELAY, DPDT #DDSX-7T #LD-6A/115VAC	K1, K3	2	78 79
13	SWITCH, TOGGLE DPDT #83054-5E	S1(S)	1	106
14	CAPACITOR, TANTALUM 4.7 µF ± 20% 50V	C1(Q)	1	23, 77
15	CONNECTOR, SO-DETAIL 47 CONTACT #7003-47	J(1Q) THRU J(25Q) J(1S) THRU J(25S) J(24S), J(25S)	47	82
16	LAMP, MINIATURE #328	DS101 THRU DS105	20	83, 84
17	INDUCTOR, MOLDED 330 µH ± 5%	(P70) L1	1	42, 90, 91
18	RESISTOR, 560 Ω ± 2%	(P70) R8	1	16, 17
19	CAPACITOR, MYLAR, .0010 µF ± 10%	(P70) C3	1	26, 27, 74
20	RESISTOR, 470 Ω ± 2%	(P70) R10 THRU R18	9	16, 17

9246P
MAG TAPE UNIT
PAGE 38
F

* NOT USED ON 92463P

DWG. REV.	DRAWING NO.	DESCRIPTION	REFERENCE DESIGNATION	ITEM NO.

MATERIAL LIST

NOTES UNLESS SPECIFIED

DRAWN / CHECK / APPR

CDC CONTROL DATA SYSTEMS SANTA MONICA, CALIFORNIA

TITLE: DIAGRAM, LOGIC, MAG TAPE UNIT

MODEL NO. / NEXT ASSY.

SIZE D | DWG NO. 103258 | REV LTR F

SCALE | DO NOT SCALE DRAWING | SHEET 38 OF 39

103258 F

REV	DESCRIPTION	CHK	DATE	APPROVED
B	SEE REV E.O			

REFERENCE DESIGNATIONS ARE ABBREVIATED. PREFIX THE DESIGNATION WITH UNIT NUMBER OR ASSEMBLY DESIGNATION OR BOTH. (MIL. STD. 168)

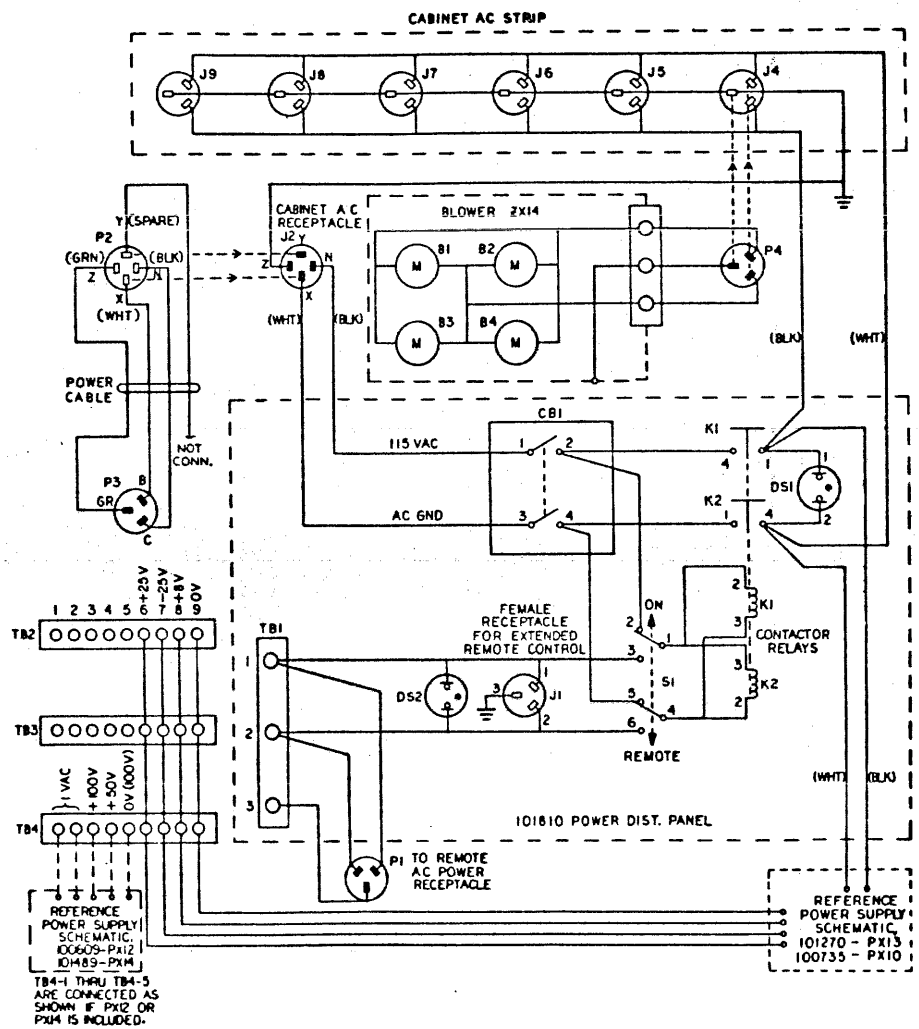

DRAWING NO	DESCRIPTION	REFERENCE DESIGNATION

MATERIAL LIST

DRAWN	KEMM	4/4/63
CHECKED		5/2/63
APPD		5/2/63

SDS

SCHEMATIC, POWER DISTRIBUTION

D	102334	B

SCALE: DO NOT SCALE DRAWING — SHEET 1 OF 2

USED ON: 9110, 9114, 9119, 9200, 9204, 9219

NEXT ASSY: 6810, 10109B, 100986, 100981

102334 B

REVISIONS				102334 B
REV	DESCRIPTION	CHG	DATE	APPROVED
	SEE SHT ONE			

REPLACEMENT PARTS LIST

ITEM	DESCRIPTION	DESIGNATION	QTY	SUPPLIER CODE (SEE INDEX)
1	CORD, A.C. #16/3 SPT-3 CORD WITH #PA-3 PLUG	P1, P4	2	101
2	CONNECTOR, 5 WIRE FEMALE #3523	P2	1	102
3	CONNECTOR, 3 WIRE MALE #3331	P3	1	102
4	RECEPTACLE, 3 WIRE FEMALE #5256	J1	1	102
5	CONNECTOR, 5 WIRE MALE #3525	J2	1	102
6	WIREMOLD, A.C. #G-20GB306	J4 THRU J9	1	103
7	LAMP, NEON #249-784H-1437	DS1, DS2	2	104
8	RELAY, SPST #CNAS-13A/115 VAC	K1, K2	2	79
9	CIRCUIT BREAKER, DOUBLE POLE #2XAM1516-35-250 VAC 60 CYCLE CURVE 2	CB1	1	105
10	SWITCH, TOGGLE DPDT	S1	1	106

102334 B

DRAWING NO.	DESCRIPTION	REFERENCE DESIGNATION
	MATERIAL LIST	

DRAWN 6/8/63
CHECK 6/8/63
APPR 6/11/63

SDS

TITLE
SCHEMATIC
POWER DISTRIBUTION

MODEL NO. 9110, 9114, 9119, 9210, 9214, 9219
MODEL AUDIT 101E10, 101C88, 100E64, 100C51

SIZE D | DWG NO. 102334 | B

SCALE | DO NOT SCALE DRAWING | SHEET 2 OF 2

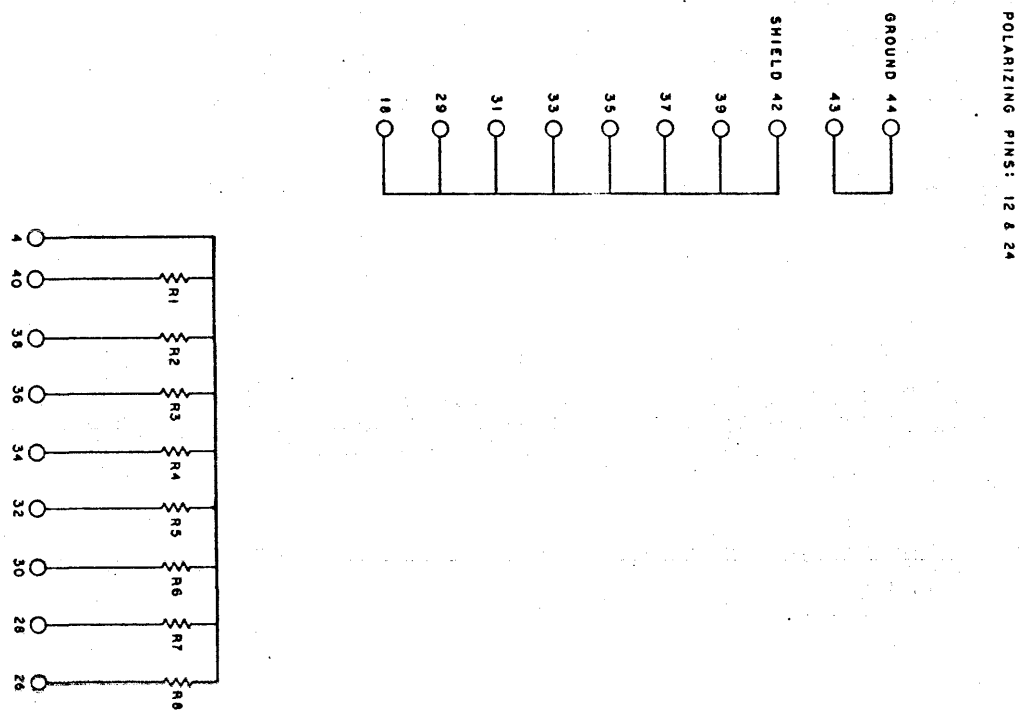

REVISIONS				C1714	A
REV	DESCRIPTION	CHK	DATE	APPROVED	
A	RELEASED TO MFG				

NO. REQ	DRAWING NO.	DESCRIPTION	REFERENCE DESIGNATION	EM

MATERIAL LIST

NOTES UNLESS SPECIFIED

DRAWN 12.10.62
CHECK
APPR

SDS SCIENTIFIC DATA SYSTEMS

TITLE SCHEMATIC RESISTOR MODULE

MODEL NO. ZK51

NEXT ASSY

SIZE D DWG NO. 101714 A

SCALE DO NOT SCALE DRAWING SHEET

101714 A

REV	DESCRIPTION	DATE	APPROVED
A	RELEASED TO MFG		

DESIGNATION	ZK56
LOCATION	20 S
KEY	14-34

CABLE PLUG MODULE

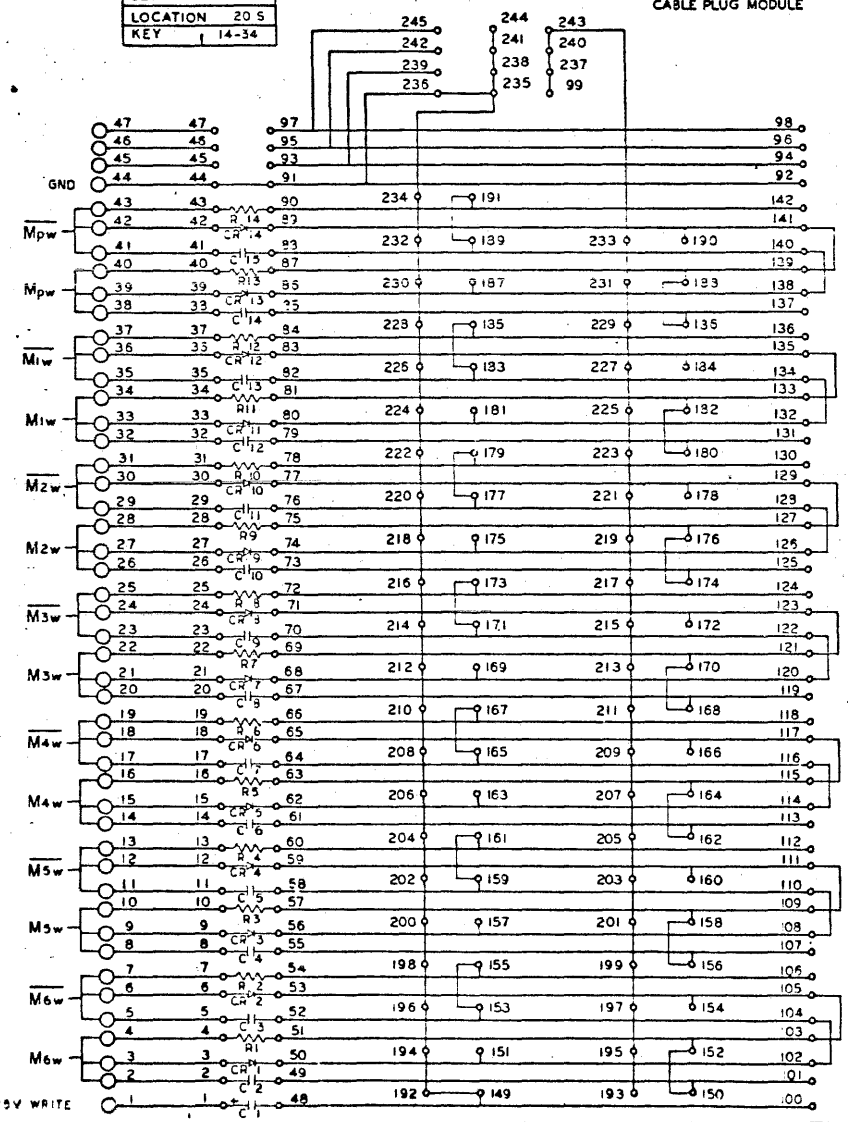

150

113

DWG SIZE	DRAWING NO.	DESCRIPTION	REFERENCE DESIGNATION	ITEM SIZE
		MATERIAL LIST		

NOTED MFG. CODE SPECIFICS

DRAWN V.N. 5/27/68
CHECK
DATE

SDS

TITLE SCHEMATIC, TERMINATION MODULE (20 S)

MODEL NO. ZK56

NEXT ASSY

SIZE D DWG NO. 103015 A

SCALE DO NOT SCALE DRAWING SHEET

103015 A

SDS-E-204

REVISIONS		103470 A
REV	DESCRIPTION	
A	RELEASED TO MFG	

DESIGNATION	ZK57
LOCATION	2S
KEY	18–28

CABLE PLUG MODULE

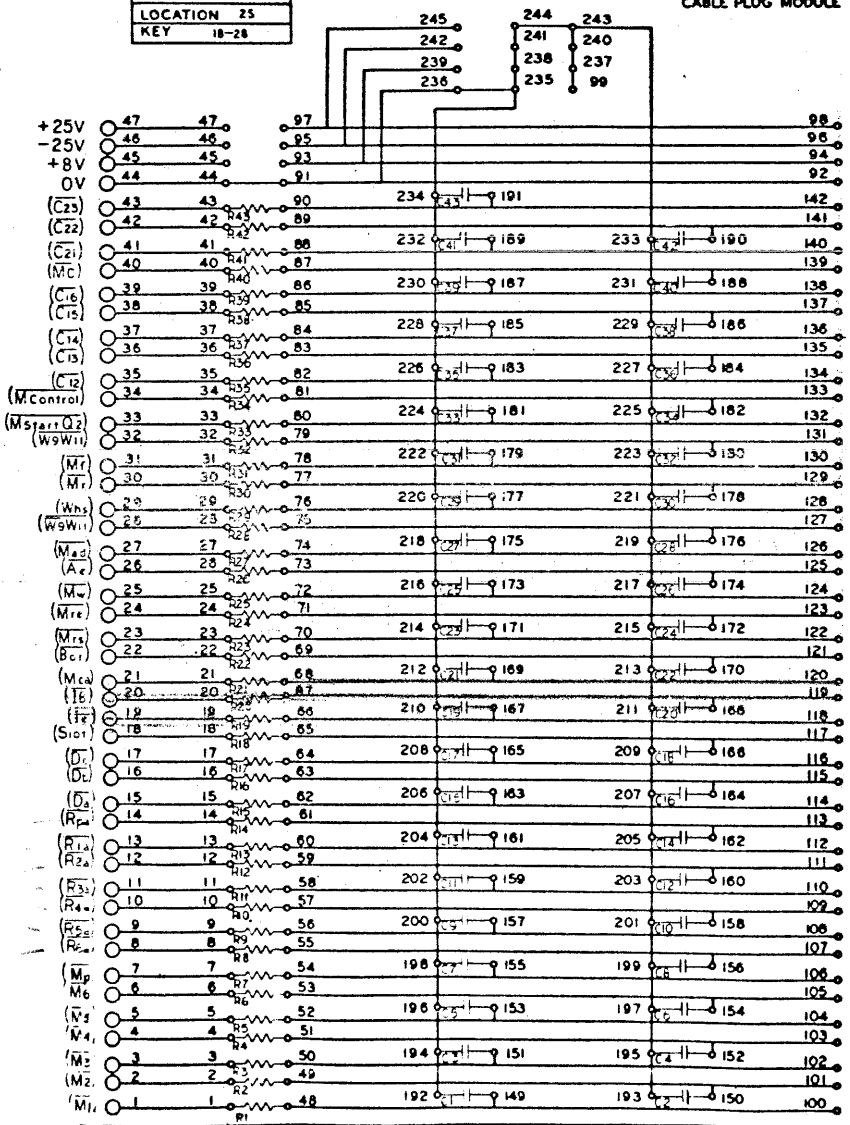

DWG NO.	DESCRIPTION	REFERENCE DESIGNATION

MATERIAL LIST

NOTED UNLESS SPECIFIED

DRAWN Martin 6-25-63
CHECK 7/1/63
APPR 7/1/63

SDS

SCHEMATIC
TERMINATION MODULE (2S)

ZK57

D 103470 A

SCALE DO NOT SCALE DRAWING

REVISIONS				103473 A
REV	DESCRIPTION	CHG	DATE	APPROVED
A	RELEASED TO MFG			

DESIGNATION	ZK58
LOCATION	45
KEY	14-36

CABLE PLUG MODULE

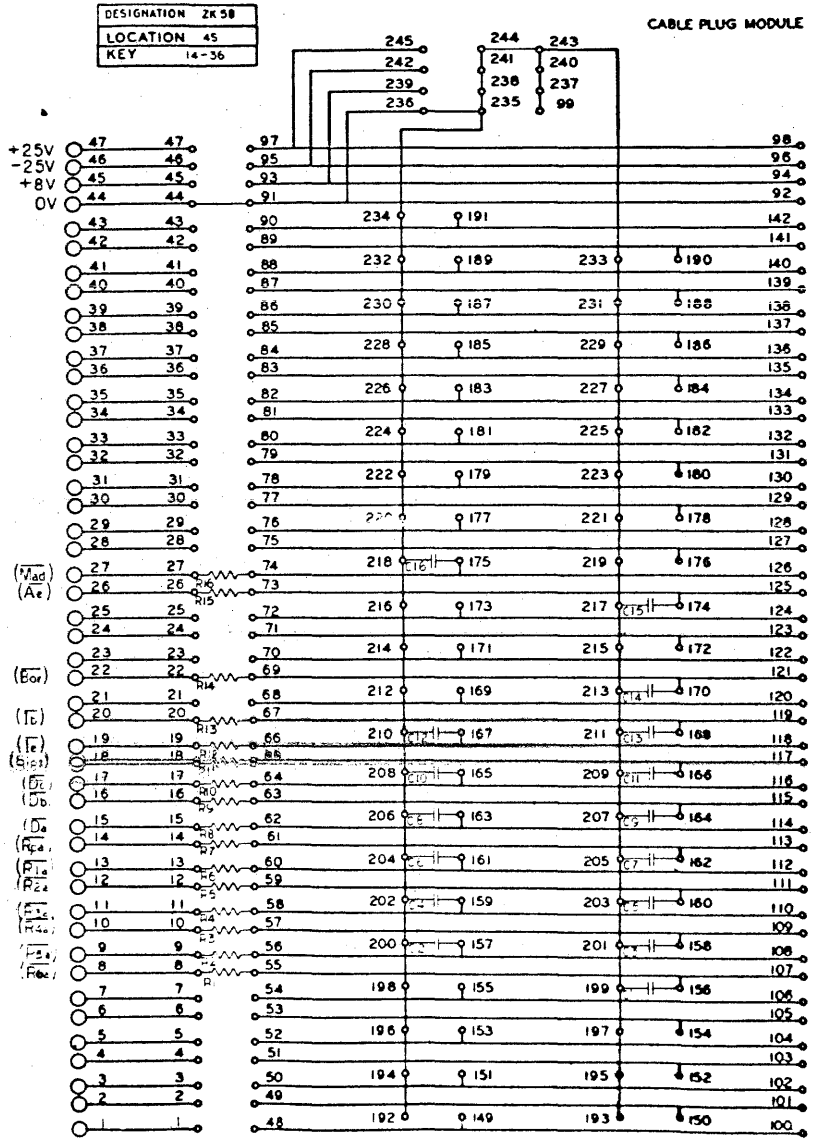

DWG SIZE	DRAWING NO.	DESCRIPTION	REFERENCE DESIGNATION	QTY REQ
		MATERIAL LIST		

NOTES UNLESS SPECIFIED

1. [illegible]
2. [illegible]
3. [illegible]
4. [illegible]

DRAWN [illegible]
CHECK [illegible]
APPR [illegible]

SDS

TITLE SCHEMATIC, TERMINATION MODULE (4S)

MODEL NO. ZK58

SIZE D | DWG NO. 103473 | A

SCALE | DO NOT SCALE DRAWING | SHEET

REV A

DWG. NO. 103474

ML

MATERIAL LIST

DWG. TITLE
ASSY, P.W.
TERMINATION MODULE (4S)

SDS SCIENTIFIC DATA SYSTEMS

ML

DWG. NO. 103474 REV A

MOD # ZK58 DATE 6/27 SHEET 2 OF 2

ITEM	DWG. TITLE	DWG.NO.	NO.REQ	REMARKS OR CRT. DESIG.
1	Board, Printed Wiring	101652-036	1	
2	Handle, Circuit Card	100016	1	
3	Rivet, Drive	100278-003	2	
4	Strip, Marker	100197	1	
5	Contact, Conn. Upper	100097	23	
6	Contact, Conn. Lower	100098	24	
7	Resistor, 1/2 watt	100111-330	16	(8-55) (9-56) (10-57) (11-58)
				(12-59) (13-60) (14-61) (15-62)
				(16-63) (17-64) (18-65) (19-66)
				(20-67) (22-69) (26-73) (27-74)
8	Capacitor	100308-332	16	(156-199) (157-200) (158-201)
				(159-202) (160-203) (161-204)
				(162-205) (163-206) (164-207)
				(165-208) (166-209) (167-210)
				(168-211) (170-213) (174-217)
				(175-218)
9	Tubing, Teflon	100274-022	3 in.	
10	Wire, Solid Bare	100042-024	3 in.	(44-91) (243-244) (236-235)

SDS-E-106 7/70

114062 A

REV	DESCRIPTION	DATE	APPROVED
A	RELEASED TO MFG.		

POLARIZING PINS 12 & 24

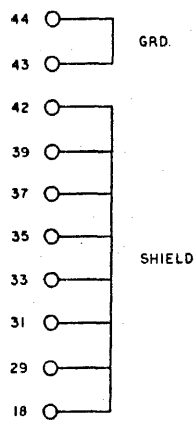

NOTES:
1. R17 THRU R20 DO NOT APPEAR IN ZK68.

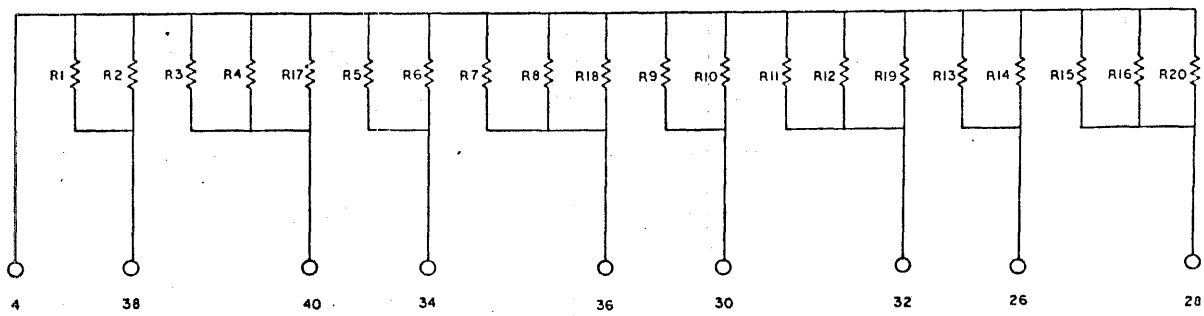

SCHEMATIC, RESISTOR MODULE

D 114062 A

ZK67
ZK68
114064
114067

Code No.	Name	Address
1	Motorola Semiconductor	5005 E. McDowell Rd. Phoenix, Arizona
2	Same as 1	
3	Fairchild Semiconductor	545 Whisman Road Mountain View, Calif.
4	Same as 3	
5	General Electric Co. Semiconductor Products Div.	Electronics Park Syracuse 1, N. Y.
6	Same as 5	
7	RCA Semiconductor Div.	Somerville, N. Y.
8	Silicon Transistor Corp.	East Gate Blvd. Garden City, N. Y.
9	Same as 8	
10	Hughes Semiconductor Div.	500 Superior Ave. Newport Beach, Calif.
11	Texas Instruments, Inc.	P.O. Box 5012 Dallas, Texas
12	Same as 11	
13	Pacific Semiconductors, Inc.	1420 Aviation Blvd. Lawndale, Calif.
14	Continental Device Corp.	12515 Chadron Ave. Hawthorn, Calif.
15	Sperry Semiconductor Div.	380 Main Ave. Norwalk, Conn.
16	Corning Glass Works	550 High St. Bradford, Penn.
17	Welwyn International, Inc.	3535 Edgecliff Terr. Cleveland 11, Ohio
18	Same as 11	
19	Arco Electronics, Inc.	Community Drive Great Neck, N. Y.
20	Sangamo Electric Co.	1207 N. 11th. St. Springfield, Ill.
21	Micamold Electric Mfg. Co.	65 Gouverneur St. Newark, N. J.
22	Kemet Company	11901 Madison Ave. Cleveland 1, Ohio
23	Sprague Electric Co.	481 Marshall St. North Adams, Mass.
24	U.S. Semiconductor Products	3540 W. Osborn R. Pheonix, Ariz.
25	General Electric Co. Capacitor Dept.	Hudson Falls, N. Y.
26	Same as 23	
27	Same as 23	
28	Raytheon Semiconductor Co.	350 Ellis St. Mountain View, Calif.
29	National Semiconductor Corp.	P.O. Box 443 Danbury, Conn.
30	General Instrument Corp.	65 Gouverneur St. Newark, N. J.
31	Sylvania Electric Products Semiconductor Div.	100 Sylvan Road Woburn, Mass.
32	Western Semiconductors	2200 S. Fairview St. Santa Ana, Calif.
33	Computer Diode Corp.	250 Garibaldi Ave. Lodi, New Jersey
34	Tungsol Electric Inc.	1 Summer Ave. Newark, N. J.
35	Bourns, Inc.	1200 Columbia Ave. Riverside, Calif.
36	International Resistance Co.	401 N. Broad St. Philadelphia, Penn.
37	General Resistance, Inc.	430 Southern Blvd. New York 55, N. Y.
38	Same as 23	
39	Technitrol Engineering Co.	1952 E. Allegheny Ave. Philadelphia, Penn.
40	Same as 39	
41	Delevan Electronics Corp.	77 Olean Road East Aurora, N. Y.
42	Same as 41	
43	Delco Radio Division	700 E. Firmin St. Kokomo, Indiana
44	Atohm Electronics	7648 San Fernando Rd. Sun Valley, Calif.
45	Dale Electronics, Inc.	P.O. Box 609 Columbus, Nebraska
46	Tepro Electric Co.	5 St. Paul Street Rochester 4, N. Y.
47	Sage Electronics Corp.	Country Club Road East Rochester, N. Y.
48	Littelfuse Inc.	1865 Miner St. Des Plaines, Illinois
49	Bussman Mfg. Co.	University at Jefferson St. Louis, Missouri
50	Sola Electric Company	1717 Busse Road Elk Grove Village, Ill.
51	Cinch Jones Division	1026 S. Homan Ave. Chicago, Ill.
52	Same as 51	
53	Ohmite Mfg. Co.	3635 Howard St. Skokie, Illinois
54	Cutler-Hammer, Inc.	321 N. 12th. Street Milwaukee, Wisc.
55	Centralab	900A E. Keefe Ave. Milwaukee, Wisc.
56	Eldema Corporation	1805 Belcroft Ave. El Monte, Calif.
57	Same as 23	
58	Same as 25	
59	Same as 20	
60	Same as 51	

Code No.	Name	Address
61	Same as 54	
62	Amelco, Inc.	341 Moffet Blvd. Mountain View, Calif.
63	Transitron Electronic Corp.	168-182 Albion St. Wakefield, Mass.
64	Same as 10	
65	Same as 30	
66	American Semiconductor Corp.	3940 N. Kilpatrick Chicago, Illinois
67	Hoffman Electronics Corp. Semiconductor Division	Box 471 1001 N. Arden El Monte, Calif.
68	Delta Semiconductors, Inc.	835 Production Place Newport Beach, Calif.
69	Pulse Engineering, Inc.	560 Robert Ave. Santa Clara, Calif.
70	Nytronics, Inc.	550 Springfield Ave. Berkeley Heights, N. J.
71	Alladin Electronics, Inc.	Nashville 10, Tenn.
72	Ferroxcube Corp. of America	E. Bridge Street Saugerties, New York
73	Electra Mfg. Co.	4051 Broadway Kansas City, Mo.
74	Same as 25	
75	Same as 24	
76	Same as 24	
77	Same as 24	
78	Same as 53	
79	Allied Control Co, Inc.	2 East 2nd Ave. New York, 21, N.Y.
80	Same as 23	
81	Same as 20	
82	Elco Corporation	Willow Grove, Penn.
83	Chicago Miniature Lamp Works	4433 Ravenswood Ave. Chicago 40, Illinois
84	General Electric Co. Miniature Lamp Dept.	Nela Park Cleveland 12, Ohio
85	Same as 34	
86	Automatic Electric Sales Corp.	North Lake, Illinois
87	Same as 24	
88	Same as 47	
89	Same as 45	
90	J.W. Miller Co.	5917 S. Main St. Los Angeles 3, Calif.
91	Stanwyck Winding Co.	137 Walsh Ave. Newburgh, N. Y.
92	Same as 36	
93	Same as 73	
94	Same as 23	
95	Philco Corp.	Lansdale Division Lansdale, Penn.
96	Amperex Electronic Corp.	230 Duffy Avenue Hicksville, N. Y.

Code No.	Name	Address
97	Siliconix, Inc.	1140 W. Evelyn Ave. Sunnyvale, Calif.
98	Continental Connector Corp.	34-63 56th Street Woodside 77, N. Y.
99	Same as 23	
100	Same as 53	
101	Royal Electric Corp.	95 Grand Ave. Pawtucket, R.I.
102	Harvey Hubbell, Inc.	Bridgeport, Conn.
103	The Wiremold Co.	Hartford 10, Conn.
104	Dialight Corp.	60 Stewart Ave. Brooklyn 37, N. Y.
105	Heinemann Electric Co.	2636 Brunswick Pike Trenton 2, N. J.
106	Arrow-Hart and Hegeman Electric	103 Hawthorne St. Hartford, Conn.
107	Allen Bradley Co.	136 W. Greenfield Ave. Milwaukee 4, Wisc.
108	General Electric Co. Meter Division	1 River Road Schenectady 5, N.Y.
109	Same as 70	
110	Winchester Electronics, Inc.	Willard Road Norwalk, Conn.
111	AMP, Inc.	Harrisburg, Penn.
112	Grayhill, Inc.	569 Hillgrove Ave. LaGrange, Illinois
113	Controls Co. of America	9555 Soreng Ave. Schiller Park, Illinois
114	Amphenol-Borg Amphenol Connector Division	1830 S. 54th Ave. Schiller Park, Illinois
115	Same as 36	
116	Same as 36	
117	Same as 73	
118	Same as 73	
119	Same as 11	
120	Thermalloy Co.	4417 N. Central Expressway Dallas 5, Texas
121	Astro Dynamics, Inc.	Second Avenue Northwest Industrial Park Burlington, Mass.
122	Tor Mfg. Co.	1533 E. Walnut St. Pasadena, Calif.
123	Wakefield Engineering, Inc.	9 Broadway Wakefield, Mass.
124	Same as 35	
125	Same as 36	
126	Same as 37	
127	Erie Resistor Corp.	644 W. 12th Street Erie, Penn.
128	Same as 55	

Code No.	Name	Address
129	Same as 37	
130	C.P. Clare and Co.	3101 Pratt Blvd. Chicago 45, Illinois
131	The Adams and Westlake Co.	N. Michigan Street Elkhart, Indiana
132	Not Assigned	
133	Not Assigned	
134	Cannon Electric Co.	3208 Humboldt St. Los Angeles 31, Calif.
135	Indiana General Corp.	Crows Mill Road Keasbey, New Jersey
136	Same as 23	
137	Electro-Cube, Inc.	805 Fairview Ave. South Pasadena, Calif.
138	Monitor Products, Inc.	815 Fremont Ave. South Pasadena, Calif.
139	Rotron Mfg. Co.	Woodstock, N. Y.
140	The Digitran Co.	660 S. Arroyo Parkway Pasadena, Calif.
141	Minneapolis-Honeywell Semiconductor Products Div.	2747 4th Ave. South Minneapolis, Minn.
142	Babcock Relays Div.	1645 Babcock Ave. Costa Mesa, Calif.
143	Simco Company	19th and Walnut St. Lansdale, Penn.
144	IMC Magnetics Corp.	570 Main Street Westbury, N. Y.
145	Malco Mfg. Co.	4025 W. Lake St. Chicago 24, Ill.
146	Drake Mfg. Co.	4626 N. Olcott Ave. Chicago 31, Ill.
147	Same as 25	
148	Same as 23	
149	Same as 20	
150	Westinghouse Electric Co.	Semiconductor Dept. Youngwood, Penn.
151	Stancor Electronics, Inc.	3501 W. Addison St. Chicago 18, Ill.
152	Ammon Instruments, Inc.	345 Kelley St. Manchester, N.H.
153	Raytheon Company Industrial Components Div.	465 Center Street Quincy, Mass.
154	Same as 108	
155	Same as 55	
156	Capitol Machine and Switch Co.	36 Balmforth Street Danburry, Conn.
157	Same as 82	
158	Same as 51	
159	Quam-Nichols Co.	Marquette Rd. at Prairie Chicago 37, Illinois

Code No.	Name	Address
160	Magtrol, Inc.	241 Seneca Street Buffalo 4, New York
161	West Coast Electrical Mfg. Co.	233 W. 116th Place Los Angeles 61, Calif.
162	Minneapolis-Honeywell Micro Switch Division	Chicago and Spring Sts. Freeport, Illinois
163	Eldema Corp.	1805 Belcroft Ave. El Monte, Calif.
164	Potter and Brumfield Div. of Amer. Machine and Foundry	1200 E. Broadway Princeton, Indiana
165	Electric Indicator Company	Camp Avenue Stamford, Conn.
166	General Instrument Co. Magne Head Division	3216 W. El Segundo Hawthorne, Calif.
167	Contract Tool Corp.	3820 Hoke Ave. Culver City, Calif.
168	Milton Ross Metals Co.	250 Jacksonville Rd. Hatboro, Penn.
169	Robinson Company	3636-5 W. 139th St. Hawthorne, Calif.
170	ADC Products, Inc.	6411 Cambridge St. Minneapolis 26, Minn.
171	Same as 170	
172	Same as 170	
173	Same as 53	
174	Bendix Corporation Scintilla Division	Sidney, New York
175	Ward Leonard Electric Co.	75 South Street Mount Vernon, N.Y.
176	Clarostat Mfg. Co. Inc.	Washington Street Dover, New Hampshire
177	J.B.T. Instruments, Inc.	133 Hamilton Street New Haven 8, Conn.
178	Herman H. Smith, Inc.	2336 Nostrand Ave. Brooklyn 10, N.Y.
179	International Instruments	88 Marsh Road Orange, Conn.
180	U.S. Engineering Co. Div. of Litton Ind.	13536 Saticoy St. Van Nuys, Calif.
181	Campbell Industries	Dover, New Hampshire
182	California Resistor Corp.	1631 Colorado Ave. Santa Monica, Calif.
183	Kelvin Electric Co.	5907 Noble Ave. Van Nuys, Calif.
184	Angstrohm Precision Co.	7341 Greenbush Ave. N. Hollywood, Calif.
185	Mepco Inc.	35 Abbet Ave. Morristown, N.J.
186	Wood Electric Corp.	244 Broad Street Lynn, Mass.
187	Pendar, Inc.	509 Sherman Ave. Coeur D'Alene, Idaho

Code No.	Name	Address
188	Aerovox Corp.	740 Belleville Ave. New Bedford, Mass.
189	Cornell-Dubilier	50 Paris Street Newark 1, N. J.
190	Augat Inc.	33 Perry Ave. Attleboro, Mass.
191	Dearborn Labs	Box 3431 Orlando, Florida
192	TRW Capacitor, Div.	112 W. 1st Street Ogallala, Nebraska
193	Electron Products	1962 Walker Ave. Monrovia, Calif.
194	Mallory & Co. Inc.	3029 E. Washington St. Indianapolis, Ind.
195	Ampex Corp.	401 Broadway Redwood City, Calif.
196	Astron Division	255 Grant Avenue E. Newark, N. J.
197	Elgin Controls Division	2435 N. Naomi St. Burbank, Calif.
198	Superior Switch Co.	1001 W. Broad St. Richmond, Va.
199	Rheem Electronics	5250 W. El Segundo Hawthorne, Calif.
200	Union Carbide Cons. Prod. (Eveready)	270 Park Ave. N.Y., New York
201	Mossman, Inc. Donald P.	Box 265 Brewster, N.Y.
202	Dickson Elect. Corp.	310 S. Wells Fargo Scottsdale, Arizona
203	Master Specialties	15020 Figureoa Gardena, Calif.
204	Alco Elect. Prod. Inc.	3 Wolcott Ave. Lawrence, Mass.
205	Southern Electronics	150 W. Cypress Ave. Burbank, Calif.
206	San Fernando Elec. Mfg. Co.	1509 First Street San Fernando, Calif.
207	Leecraft Mfg. Co. Inc.	21-16 44th Rd. Long Island City, N.Y.
208	Oak Mfg. Co.	Crystal Lake, Illinois
209	National Cash Register Co.	S. Main at K St. Dayton, Ohio
210	Sylvania, Lighting Prod. Division	60 Boston St. Salem, Mass.
211	Westinghouse Lamp Div.	MacArthur Blvd. Bloomfield, N. J.
212	National Radio Inc.	37 Washington St. Melrose, Mass.
213	James Electronics Inc.	4050 N. Rockwell, Chicago, Ill.

Code No.	Name	Address
214	Vemaline Products Co.	Box 1, Franklin Lakes, New Jersey
215	United Shoe Mach. Corp.	Federal at High St. Boston 7, Mass.
216	Atlas Tack Corp.	South Pleasant St. Fairhaven, Mass.
217	Cambridge Thermionic Corp.	445 Concord Ave. Cambridge 38, Mass.
218	Hartwell Corp.	9035 Venice Blvd. Los Angeles 34, Calif.
219	Kulka Electric	633 S. Fulton Ave. Mt. Vernon, N.Y.
220	Atlee Corp.	2 Lowell Ave. Winchester, Mass.
221	Birnbach Radio	145 Hudson St. New York 13, N.Y.
222	Southco Fastener Co.	233 Industrial Hwy. Lester, Penn.
223	Standard Pressed Steel Co. (SPS)	Box 1084, Jenkintown, Penn.
224	Penn Engineering & Mfg. Corp.	Box 311 Doylestown, Penn.
225	National Transistor, Div. ITT	500 Broadway Lawrence, Mass.
226	Lerco Div., Microdot	220 Pasadena Ave. South Pasadena, Calif.
227	Burndy	Norwalk, Connecticut
228	Electro-Mec Inst. Co.	47-51 33rd St. Long Island City, N.Y.
229	Ohio Nut & Bolt	36 First Ave. Berea, Ohio
230	Riedon Div. On Mark Eng.	11728 Vost St. No. Hollywood, Calif.
231	Rubbercraft Corp. of Calif.	1800 W. 220th St. Torrance, Calif.
232	Masterite Industries	835 W. Olive St. Inglewood, Calif.
233	Weckesser Co. Inc.	5701 Northwest Hwy. Chicago 46, Illinois
234	Key Resistor Corp.	321 W. Redondo Beach Blvd. Gardena, Calif.
235	Alpha Wire Corp.	180 Varick St. New York 14, N.Y.
236	Nylon Molding Corp.	141 South Ave. Garwood, New Jersey
237	Dakota Engineering Co.	4315 Sepulveda Culver City, Calif.
238	PCA Electronics	16799 Schoenborn St. Sepulveda, Calif.
239	ILS Div., Merriam	10978 Madison Ave. Cleveland, Ohio

Code No.	Name	Address
240	Philadelphia Insulated Wire Co.	333 New Albany Rd. Moorestown, N.J.
241	Amerock Corp.	4000 Auburn St. Rockford, Illinois
242	Superior Electric Co.	383 Middle St. Bristol, Conn.
243	Reon	155 Sawmill River Rd. Yonkers, N.Y.
244	Hardwick Hindle	Huntington, Indiana
245	Driver, W.B.	1875 MacCarter Hwy. Newark 4, N.J.
246	Driver-Harris	202 Middlesex St. Harrison, N.J.
247	Pacific Electricord	747 W. Redondo Beach Blvd., Gardena, Calif.
248	Standard Wire & Cable	3434 Overland Ave. Los Angeles 34, Calif.
249	Illumitronic Eng.	680 E. Taylor Ave. Sunnyvale, Calif.
250	Belden Mfg. Co.	415 S. Kilpatrick Ave. Chicago 44, Ill.
251	Arnold Eng.	Box G, Marengo, Ill.
252	Carstedt Research	2501 E. 68th St. Long Beach 5, Calif.
253	Maloney Elect. Co.	5390 Bircher Ave. St. Louis, Mo.
254	Gerrard, A. J.	400 E. Touhy Ave. Des Plaines, Ill.
255	Ducomunn	4890 S. Alameda Los Angeles, Calif.
256	Stevens Paper Mills Inc.	Box 347 Windsor, Conn.
257	Schweitzer, P. J.	Lee, Massachusetts
258	Cottrell Paper	10 Purchase St. Fall River, Mass.
259	American Pamcor	181 Hillcrest Havertown, Pa.
260	Johns - Manville	220 E. 40th St. New York 16, N. Y.
261	Minnesota Mining & Mfg. Co. (3M)	2501 Hudson Ave. St. Paul, Minn.
262	Permacel Mfg. Co.	U. S. Highway 1 New Brunswick, N.J.
263	Technical Tape Co.	240 North Ave. New Rochelle, N. Y.
264	Anaconda	605 Third Ave. New York, N. Y.
265	Essex Wire	1601 Wall St. Fort Wayne, Indiana
266	Kennecott Wire	Phillipsdale 16, R. I.
267	Phelps - Dodge Copper	4400 New Haven Ave. Fort Wayne, Ind.

Code No.	Name	Address
268	Westinghouse, Specialty Transf. Div.	Greenville, Pa.
269	International Recitifer	233 Kansas St. El Segundo, Calif.
270	Chicago Printed String	2322 Logan Blvd. Chicago 47, Ill.
271	Varflex	514 W. Court St. Rome, N.Y.
272	Natvar Corp.	211 Randolph Ave. Woodbridge, N.J.
273	General Electric Wire & Cable Div.	1285 Boston Ave. Bridgeport, Conn.
274	Standard Record Mfg.	17 N. San Gabriel Blvd. Pasadena, Calif.
275	Sun Chemical Corp. Electro-Tech Prod. Div.	Nutley, N.J.
276	Camlock Fastener Corp.	22 Spring Valley Rd. Paramus, N.J.
277	Thomas & Betts	36 Butler St. Elizabeth, N.J.
278	Unistrut	933 W. Washington Blvd Chicago, Ill.
279	Victor Wire & Cable	618 Main St. Warwick, R.I.
280	Thermatics Corp.	P.O. Drawer 505 Elm City, N. Carolina
281	Reeves-Hoffman	145 Cherry St. Carlisle, Penn.
282	Bulova Electronics	61-20 Woodside Ave. Woodside 77, N.Y.
283	Palmer Inst. Co.	1017 Mission St. Pasadena, Calif.
284	Filtair, Inc.	706 Forrest St. Charlottesville, Va.
285	Signetics	680 W. Maude Ave. Sunnyvale, Calif.
286	American Super-Temp. Wires, Inc.	W. Canal St. Winooski, Vermont
287	Jan Hardware Mfg. Co.	38-03 Queens Blvd. Long Island City 1, N.Y.
288	International Business Mach. Co.	112 E. Post St. White Plains, N.Y.
289	Hoskins Mfg.	4445 Lawton Ave. Detroit 8, Michigan
290	Zippertubing Corp.	13000 S. Broadway Los Angeles 61, Calif.
291	CPR International	555 N. Alaska, Torrance, Calif.
292	Western Insulated Wire	2425 E. 30th Los Angeles 58, Calif.
293	Minneapolis Honeywell, Meter Div.	Grenier Field Manchester, N.H.

Code No.	Name	Address
294	Ives, H. B.	New Haven, Conn.
295	Plastiglide Mfg. Co.	1757 Stanford St. Santa Monica, Calif.
296	Croven Ltd.	500 Beech St. Box 1420, Whitby, Ontario, Canada
297	Darnell Corp.	12000 S. Woodruff Ave. Downey, Calif.
298	Tracor	Austin, Texas
299	Barden Corp.	200 Park Avenue Danbury, Conn.
300	Kooltronic Fan Co.	Box 504 Princeton, N. J.
301	Waldes-Kohinoor	47-16 Austel Place Long Island City, New York
302	PIC Design Corp.	477 Atlantic Ave. E. Rockaway, N. Y.
303	Shakeproof Division Illinois Tool	St. Charles Road Elgin, Illinois
304	Elastic Stop Nut Co. (ESNA)	2330 Vauxhall Road Union, N. J.
305	National Lock Co.	42 Hermon Street Newark 5, N. J.
306	Groov-Pin Corp.	1125 Hendricks Cswy. Ridgefield, N. J.
307	Harrison Labs. Div.	45 Industrial Road Berkeley Heights, New Jersey
308	Boston Gear Works	14 Hayward Street Quincy 71, Mass.
309	Emerson & Cumming	869 Washington Street Canton, Mass.
310	ARBCO Electronics	7820 Gloria Van Nuys, Calif.
311	Sealectro	139 Hoyt St. Mamaroneck, New York
312	General Sensor, Inc.	Box 231 Athens, Texas

Code No.	Name	Address
313	Thermal-Systems, Inc.	15100 S. Broadway Gardena, Calif.
314	Tinnerman Products, Inc.	Box 6688 Cleveland 1, Ohio
315	Brush Beryllium Co.	17876 St. Clair Ave. Cleveland, Ohio
316	National Beryllia Corp.	1st & Haskell Avenues Haskell, N. J.
317	Frenchtown Porcelain	Frenchtown, N. J.
318	Lenz Electric Mfg. Co.	1751 N. Western Ave. Chicago 47, Ill.
319	Space Products Co.	2235 E. Artesia St. Long Beach, Calif.
320	Sterling Inst. Div.	76 E. 2nd Street Mineola, N. Y.
321	Atlantic India Rubber Co.	571 W. Polk St. Chicago 7, Illinois
322	Waldom Electric	4627 W. 53rd Street Chicago, Illinois
323	Mystik Tape Inc. Div.	1700 Winnetka Ave. Northfield, Ill.
324	Amphenol-Borg, Controls Div.	120 S. Main Janesville, Wisc.
325	General Electric, Transformer Div.	1 River Road Schenectady, N. Y.
326	GC Electronics Div.	400 S. Wyman St. Rockford, Ill.
327	United Carr Fastener Div.	459 Watertown St. Newtonville, Mass.
328	North American Elect. Div. IRC	71 Linden St. West Lynn, Mass.
329	Carol Cable Div., Crescent Wire	249 Roosevelt Ave. Pawtucket, R. I.
330	Plastoid Corp.	42-61 24th Street Long Island City, N.Y.
331	G-V Controls Inc.	101 Okner Parkway Livingston, N. J.
332	Teletype Corp.	5555 Touhy Avenue Skokie, Illinois
333	Parker Seal	10567 Jefferson Blvd. Culver City, Calif.