Low Pressure Diaphragm

200 SERIES

- Sensitive capsule-type, non-fillable dry gauge
- Vacuum ranges through 0 psi to 10 psi
- 2-1/2" and 4" gauge sizes
- Black painted Steel, Stainless Steel and impact-resistant ABS case
- Copper alloy and Brass wetted parts

OPERATING SPECIFICATIONS

1. **Working Pressure Limitations**
   a. Dynamic Pressure
   The working pressure should be limited to 60% of the dial range.
   b. Static Pressure
   The working pressure, where no sharp fluctuations occur, should be limited to 90% of the dial range

APPLICATIONS

- Filter monitoring
- Gas distribution
- HVAC
- Leak detection
- Level indication
- Medical

	SERIES	SPECIFICATIONS
Pressure ranges	200 Series (all)	Extreme low pressure vacuum ranges through 0 psi to 10 psi
Accuracy	25-200, 25-210, 25-224	±1.6% full scale
	25-206, 25-216	±2.5% full scale
	40-200	±1.6% full scale; optional ±1% full scale
Temperature ranges*	200 Series (all)	Media -4 °F to 176 °F (-20 °C to 80 °C) Ambient -4 °F to 140 °F (-20 °C to 60 °C)
Measuring element	25-200, 25-210, 25-224, 40-200	Copper alloy diaphragm capsule
Connection	200 Series (all)	1/4″ NPT, Brass
Case	25-200, 25-210	Black painted Steel
	25-206, 25-216, 25-224	Black ABS (Acryl Nitril Butadien Styrol) with 25-224 includes zinc-plated Steel panel mount clamp
	40-200	304 Stainless Steel
Bezel	40-200	304 Stainless Steel
Lens	25-200, 25-206, 25-210, 25-216, 25-224	Acrylic
	40-200	Instrument glass
Pointer	200 Series (all)	Black finished Aluminum
Dial	200 Series (all)	Aluminum, white background with black scale. UV resistant.
Movement	25-200, 25-210, 25-224, 40-200	Brass and Nickel-silver with highly polished bearing surfaces
	25-206, 25-216	Cu-Alloy

* For every 18 °F (10 °C) shift in temperature from which the gauge is calibrated, the user can experience up to ±0.4% additional error.

For details on accuracy/standard dial configuration and dial layouts, see pages 56-61.

WARNING: This product can expose you to chemicals including Lead, which is known to the State of California to cause cancer and birth defects or other reproductive harm. For more information go to www.P65Warnings.ca.gov

ORDERING INFORMATION

GAUGE SIZES	**25**	2-1/2″	**40**	4″				
CASE TYPES	**200**	Steel, bottom connection (304SS for 4″)			**224**	ABS, panel mount		
	210	Steel, back connection			**234**	Gas pressure test kit**		
PRESSURE RANGES	**15 inH_2O Vac**	-15 inH_2O to 0 inH_2O	**100 inH_2O**	0 inH_2O to 100 inH_2O	**100 oz/in^2**	0 oz/in^2 to 100 oz/in^2	**60 mbar**	0 mbar to 60 mbar
	30 inH_2O Vac	-30 inH_2O to 0 inH_2O	**160 inH_2O**	0 inH_2O to 160 inH_2O	**160 oz/in^2**	0 oz/in^2 to 160 oz/in^2	**100 mbar**	0 mbar to 100 mbar
	60 inH_2O Vac	-60 inH_2O to 0 inH_2O	**200 inH_2O**	0 inH_2O to 200 inH_2O	**20 $oz/in^2/inH_2O$**	0 $oz/in^2/inH_2O$ to 20 $oz/in^2/inH_2O$	**160 mbar**	0 mbar to 160 mbar
	100 inH_2O Vac	-100 inH_2O to 0 inH_2O	**10 oz/in^2**	0 oz/in^2 to 10 oz/in^2	**32 $oz/in^2/inH_2O$**	0 $oz/in^2/inH_2O$ to 32 $oz/in^2/inH_2O$	**250 mbar**	0 mbar to 250 mbar
	10 inH_2O	0 inH_2O to 10 inH_2O	**15 oz/in^2**	0 oz/in^2 to 15 oz/in^2	**3 psi**	0 psi to 3 psi	**400 mbar**	0 mbar to 400 mbar
	15 inH_2O	0 inH_2O to 15 inH_2O	**30 oz/in^2**	0 oz/in^2 to 30 oz/in^2	**5 psi**	0 psi to 5 psi	**600 mbar**	0 mbar to 600 mbar
	30 inH_2O	0 inH_2O to 30 inH_2O	**35 oz/in^2**	0 oz/in^2 to 35 oz/in^2	**10 psi**	0 psi to 10 psi		
	60 inH_2O	0 inH_2O to 60 inH_2O	**60 oz/in^2**	0 oz/in^2 to 60 oz/in^2	**40 mbar**	0 mbar to 40 mbar		
CONNECTION SIZE	**1/4**	1/4″ NPT						
OPTIONS	**BLRF**	Black Rear Flange	**GL**	Glass Lens*	**OP**	Over Pressure Protection	**CCR**	Chrome Cover Ring
	SSRF	304SS Rear Flange	**SG**	Safety Glass Lens*	**SSBU**	Stainless Steel Bezel & U-Clamp	**LM**	Laser Marking
	BLFF	Black Front Flange***	**PL**	Acrylic Lens	**BBU**	Black Bezel & U-Clamp	**ST**	Stainless Steel Tagging
	SSFF	304SS Front Flange	**RL**	Recalibrator Lens	**BCR**	Black Cover Ring	**BP3**	Brass Press Fit Orifice 0.3 mm
	CFF	Chrome Front Flange***	**SP**	Red Set Pointer	**SSCR**	Stainless Steel Cover Ring	**BT3**	Brass Threaded Orifice 0.3 mm
	SSC	Stainless Steel Case	**MIP**	Maximum Indicating Pointer				

Please consult your local NOSHOK Distributor or NOSHOK, Inc. for availability and delivery information.

NOTE: Refer to 200 Series Options & Accessories chart on page 51 for availability by part number.

* A Steel, Stainless or chrome cover ring must be additionally ordered when lenses other than acrylic are utilized on all 200 Series
** Only available in 2-1/2″ size, 20 oz/35 inH_2O
*** Not available on 25-200 model

EXAMPLE **25 – 200 – 30 – inH_20 – 1/4 – BP3**

Gauge size ..... 2-1/2"
Case type ..... Steel, bottom connection
Pressure range & scale option .....0 inH_20 to 30 inH_20
Connection size..... 1/4" NPT
Option..... Brass Press Fit Orifice 0.3 mm

25-200

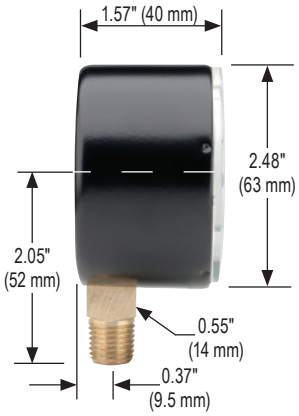

25-206

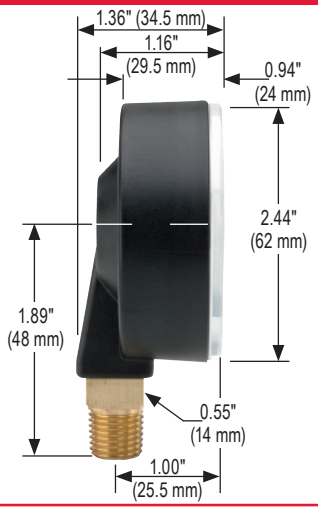

40-200

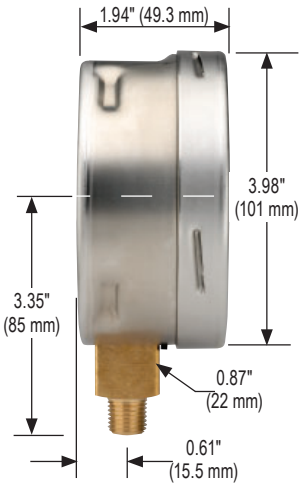

25-210

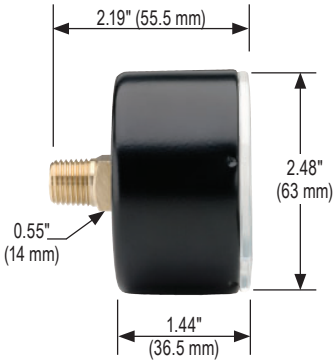

Dimensions

25-216

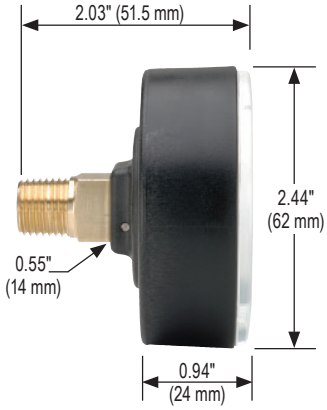

25-210 Front Flange

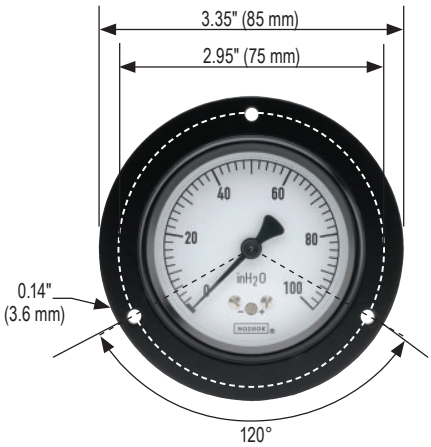

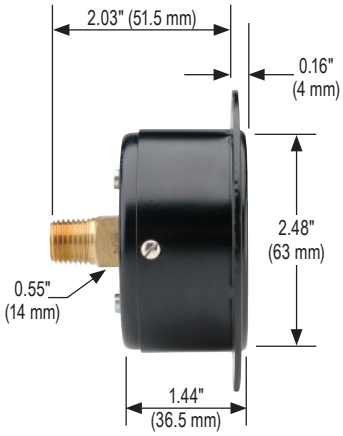

25-200 Rear Flange

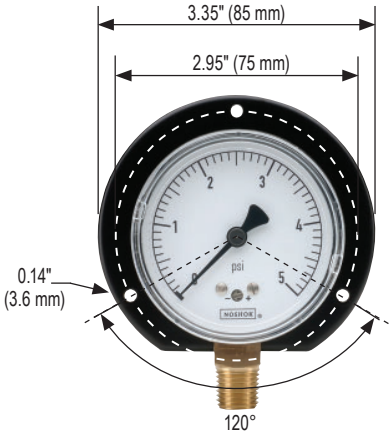

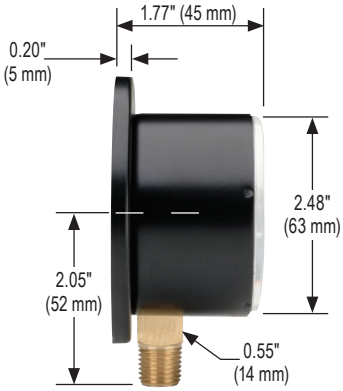

40-200 Rear Flange

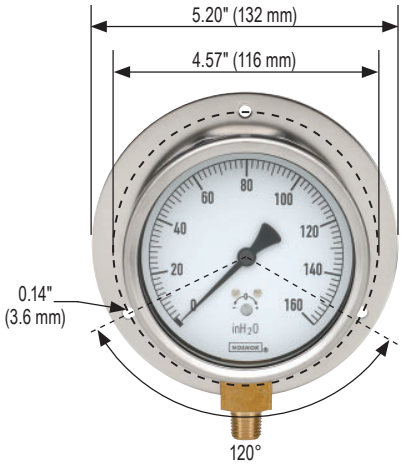

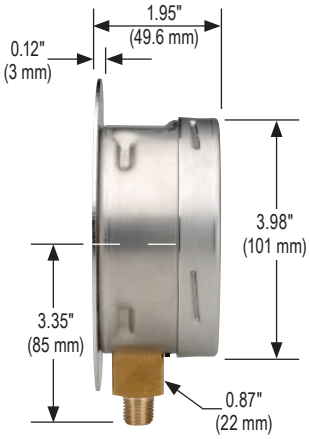

25-210 Triangular Bezel w/U-Clamp

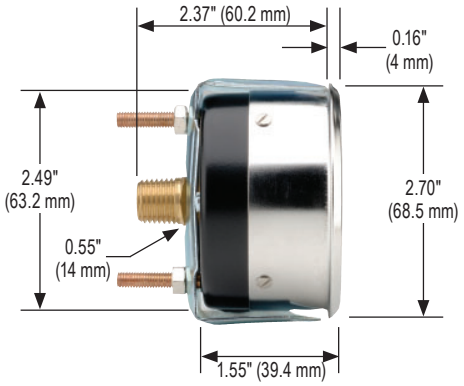

25-224 with Panel Mount Clamp

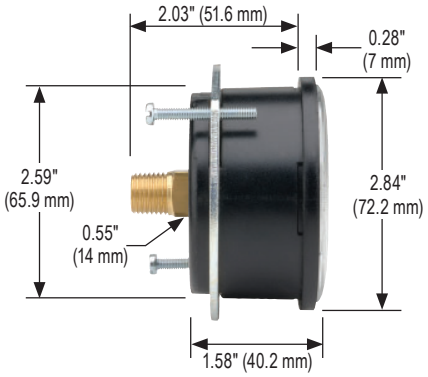
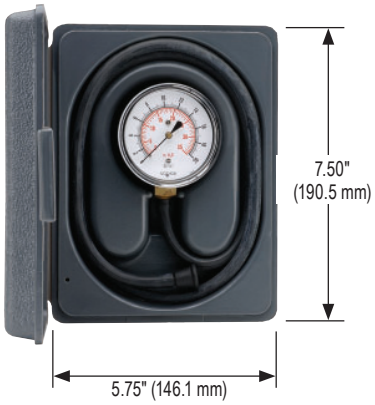
25-234