BOSCH
Invented for life

Kitchen Experience and Design Guide

Volume 7

Contents

Bosch in Every Detail 4
Design Philosophy 8
Discover Bosch Benchmark® Series 10
Black Stainless Steel Kitchen 12
Small Space Living 14
Home Connect™ 16
Cooktops 18
Built-in Wall Ovens 46
Microwaves & Drawers 76
Built-in Coffee Machine 96
Slide-in Ranges 100
Ventilation 118
Dishwashers 154
Refrigeration 178
24" Compact Laundry 212
Experience Bosch 222
Customer Service 224
Warranty 225

Savor every detail of Bosch.

No place means home more than the kitchen. It's where we gather with family and friends, exhale after a long day, and savor so many of life's simple moments.

Through our products, we strive to enhance the daily quality of everyday lives. Believing that a cooktop should be a recipe for ease. That the joy of simplicity is anything but minimal. And that it's important to sometimes stop and smell the rosemary carrots. These are the true hallmarks of Bosch quality. These are the details to savor.

^ **A wholistic kitchen design considers** appliances as an intrinsic part of the design process.

Quality is in the details.

From the feel of an oven handle, to the quiet of a dishwasher, to the ease of a cooktop, we believe the products we use and interact with everyday, can enhance the daily quality of your life. It's these small details, obsessed upon by our engineers, and repeatedly tested in our factory, that manifest as the tangible difference of Bosch quality.

> Premium materials like brushed stainless steel.

v 485 quality checks before leaving our dishwasher factory in North Carolina.

"The Bosch 800 Series is the best dishwasher we've ever tested."

– Reviewed.com

Bosch design philosophy

These are the principles that guide every Bosch product .

For over 100 years, Bosch appliances have embraced a tradition of timeless design that's both purposeful and beautiful. We see the beauty in simple, streamlined aesthetics that result from how our products are actually used.

1 Form + Function

Bosch design is equally purposeful and beautiful, creating a lasting and rewarding user experience.

2 Symmetry

Balanced, symmetrical lines offer a timeless look that's pleasing to the eye and offers a distinctive family appearance.

3 Proportions

The harmonious arrangement of varying elements result in a sophisticated, well-balanced design.

4 Materials

The use of premium materials makes our appliances visually arresting and offers a tactile sense of quality that you can feel.

5 Illumination

Subtle, purposeful illumination enhances usability while creating an emotional connection.

6 Color Palette

From classic black and white, to metallic tones and red/white accent lighting, our affinity for neutral colors helps seamlessly blend our appliances into a range of kitchens.

7 Alignment

Flush, well defined surface contours, unified design elements and tight panel gaps indicate an elevated level of engineering precision.

8 Subtlety

Subtle, thoughtful details delight the user in unexpected ways and improve the overall experience of our appliances.

9 Integration

From kitchen designs ranging from modern to transitional, Bosch appliances naturally integrate with any style.

10 Longevity

With enduring, timeless design and lasting quality, every Bosch appliance beautifully withstands the test of time.

The Benchmark® Series.

Discover Bosch Benchmark® Series.

Like the name, Benchmark® Series represents the pinnacle of Bosch design and performance. Our Benchmark® Series features signature products like built-in refrigeration, steam and SideOpening wall ovens, and FlexInduction® cooktops. Designed as a suite or alone, our Benchmark® Series is sure to beautifully complement any kitchen. Available only at select dealers.

^ **Steam Convection Oven** Enjoy the endless versatility of steam to cook meals that are both healthy and delicious.

^ **FlexInduction® Cooktop** Provides more flexibility by combining two cooking zones into one larger zone.

v **MyWay® rack** The third rack, reimagined. Maximize loading space without sacrificing it elsewhere.

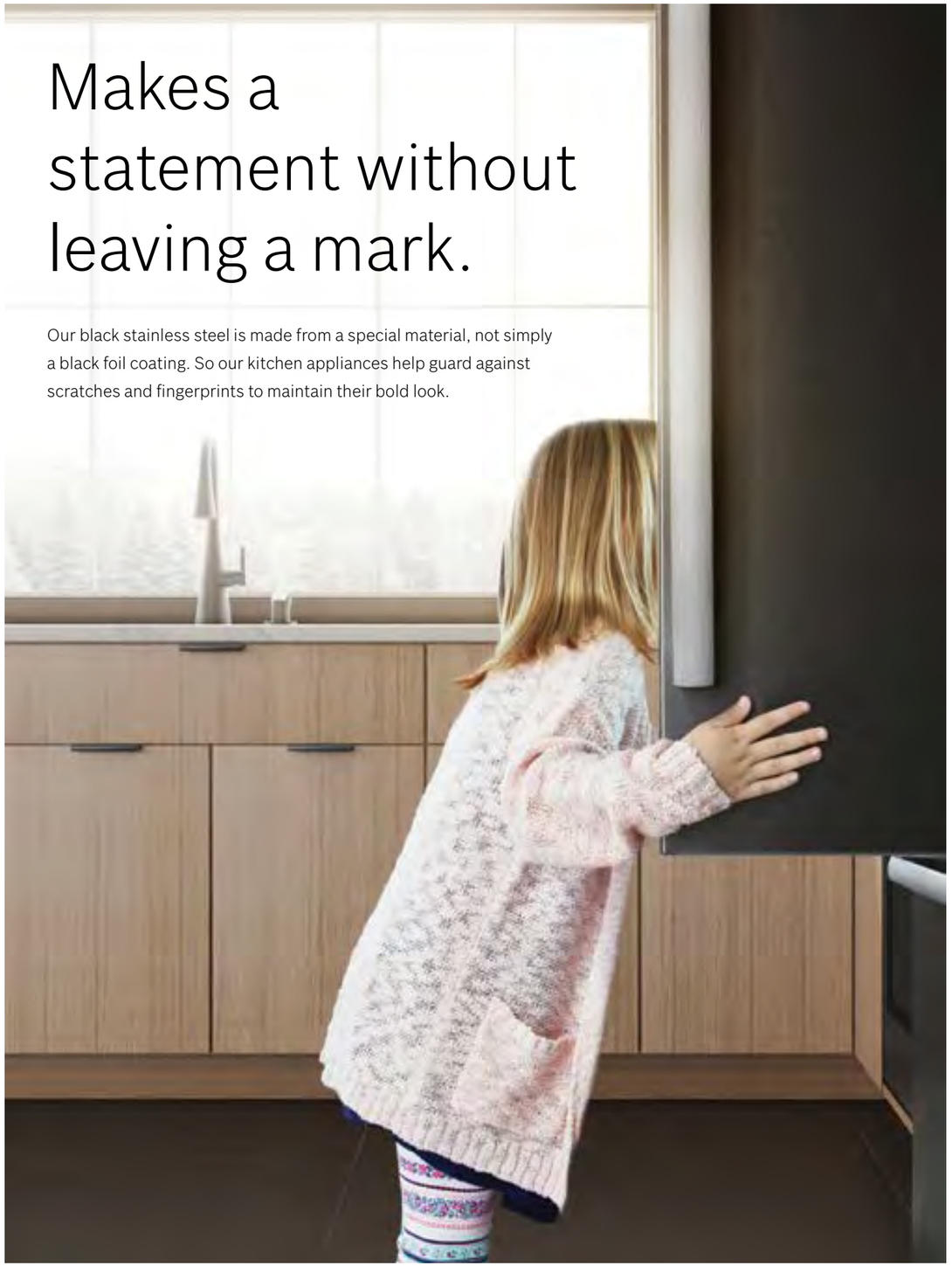

Makes a statement without leaving a mark.

Our black stainless steel is made from a special material, not simply a black foil coating. So our kitchen appliances help guard against scratches and fingerprints to maintain their bold look.

Introducing the black stainless steel collection.

Daringly different. Infinitely beautiful.

Behold a daring new way to design your kitchen. Our black stainless steel appliances perform as good as they look. Built with the quality you expect from Bosch in a contemporary style, the collection is strong, sturdy, and sleek.

Sleek. Clean. Sophisticated.

What's beneath the surface is equally impressive. Our black stainless steel collection is designed with superior engineering and quality materials for outstanding performance day in and day out. A perfect complement to any style.

Small space living.
The big new movement.

Small space living is no longer seen as a sacrifice or compromise. More and more, people are choosing smaller scale living out of desire, rather than need. Designing for small spaces, especially kitchens, lends itself to embracing the beauty of simplicity and efficiency. Clean, uncluttered lines. Easy aesthetics. And smaller-scaled appliances designed in correct proportions, creating balance and harmony within the surrounding space. Bosch's suite of 18" and 24" appliances are specifically designed to fit downscaled living, without sacrificing upscale tastes. Premium in every way, Bosch small scale appliances feature the quality and performance you'd expect in full-size appliances.

< **From our 24" wall ovens** which offer up to 10 cooking modes and Genuine European Convection, to our 18" dishwashers with room to fit 10 full place settings, to our 24" glass door refrigerator, Bosch's small space appliances provide efficient solutions that can elevate any kitchen or laundry space, regardless of size.

V **When it comes to small spaces,** less is more. Timeless design is the secret to creating smaller habitats that don't sacrifice quality or style.

^ **Provide streamlined beauty and efficiency** to any project with Bosch small space appliances.

24" Pull-Out Visor Hoods
(see page 134 for details)

24" Speed Ovens
(see page 82 for details)

24" Refrigerators
(see page 208 for details)

24" Compact Laundry
(see page 214 for details)

24" Cooktops
(see pages 24, 32 and 40 for details)

24" Wall Ovens
(see page 52 for details)

18" Dishwashers
(see page 174 for details)

Master your day, your way with Home Connect™.

Bosch is satisfying the ever-growing desire for a smart, connected home, with a collection of connected appliances that bring the design, innovation and efficiency you'd expect from Bosch. Home Connect™ is the intelligent platform that allows a variety of Bosch home appliances to be remotely monitored and controlled with a single app, for a new level of ease and convenience.

From remotely starting the dishwasher or washer at work, to keeping an eye on dinner in the oven, to brewing a frothy latte from bed, the Home Connect™ app allows you to be in effortless control from your smartphone or tablet. And with a variety of Home Connect partner applications such as Amazon Dash, you can even handle simple tasks like reordering dishwasher detergent. Most importantly, Home Connect™ helps you take hold of your day, in your way.

Home Connect™ partners:

amazon dash Replenishment · amazon alexa · drop · fitbit · EVE EVOLVED VEHICLE ENVIRONMENTS · IFTTT · nest

Cooktops

Bosch cooktops are designed to deliver perfect results with minimal effort. Whether you choose induction, gas or electric, every Bosch cooktop combines simplicity with intuitive usability. So recipes are followed more efficiently, meals are made quickly, and cleanup happens easily. Because at the end of a long day, Bosch believes cooking should bring joy, not frustration.

PowerMove®

Lets you divide your FlexInduction® cooktop into three conveniently preset power level zones. Simply slide cookware across the cooktop into a different zone to adjust the temperature. It's great for recipes with various stages of cooking required.

Benchmark® Series Cooktops

Our Benchmark® Series cooktops offer three powerful and versatile ways to cook—induction, electric or gas.

Induction

FlexInduction®

FlexInduction® allows you to combine two cooking zones into one to accommodate large pans or griddles perfectly. Or, use the cooking zones individually. Either way, enjoy even cooking—no matter the size of your pan.

Home Connect™

With Home Connect™, remotely monitor the status of every cooking zone so you'll never need to wonder whether you switched off your cooktop. You'll also have access to remote diagnostics for streamlined service assistance, a world of diverse recipes, and more.

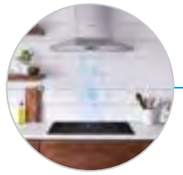

Hood Control

From your smart device or cooktop control panel you can program your Wi-Fi synced hood to turn on the fan and lighting when turning on your cooktop.

Electric

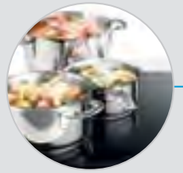

Flexible cooking options

With 5 burners, including an 11" 3,080-watt triple-ring heating element, our 36" Benchmark® Series electric cooktop provides the ultimate flexibility when cooking.

AutoChef®

AutoChef® applies the perfect amount of heat, without having to fidget with temperature settings. From making pancakes to searing steak, it takes the guesswork out of cooking.

Gas

Dual-stacked burner

Our Benchmark® Series gas cooktop features a powerful 20,000 BTU center, dual-stacked burner that delivers faster boiling and low simmering for greater cooking flexibility.

Benchmark® Series Induction Cooktops

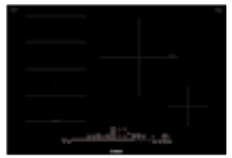

30" Benchmark® Series
NITP069UC (Frameless)
NITP069SUC (Frame)

- FlexInduction® Element
- 11" Cooking Zone
- PowerMove®
- Home Connect™
- SpeedBoost®

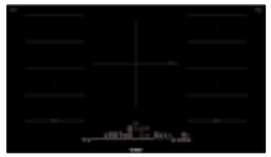

36" Benchmark® Series
NITP669UC (Frameless)
NITP669SUC (Frame)

- FlexInduction® Element
- \+ 12" Dual-Ring Center Cooking Zone
- PowerMove®
- Home Connect™
- SpeedBoost®

\+ Indicates a step-up feature

	30"	36"
	Black – NITP069UC Black with Stainless Steel Frame – NITP069SUC	Black – NITP669UC Black with Stainless Steel Frame – NITP669SUC
General Properties		
Home Connect™ (Wi-Fi Enabled)	Yes	Yes
Controls	PreciseSelect® Touch	PreciseSelect® Touch
Element Performance		
Power of full zone left & right heating element (in boost)	N/A	3,300 W (3,600 W)
Power of full zone left heating element (in boost)	3,300 W (3,600 W)	N/A
Power of front left heating element (in boost)	2,200 W (3,600 W)	2,200 W (3,600 W)
Power of back left heating element (in boost)	2,200 W (3,600 W)	2,200 W (3,600 W)
Power of center heating element (in boost)	N/A	3,300 / 2,200 W (3,700 / 3,400 W)
Power of back right heating element (in boost)	2,600 W (3,700 W)	2,200 W (3,600 W)
Power of front right heating element (in boost)	1,400 W (2,200 W)	2,200 W (3,600 W)
Burners with booster	All*	All**
Element Size		
Dimension of front left heating element	8" x 9"	7" x 8"
Dimension of back left heating element	8" x 9"	7" x 8"
Dimension of center heating element	N/A	12", 9"
Dimension of back right heating element	11"	7" x 8"
Dimension of front right heating element	6"	7" x 8"
Technical Details		
Watts	7,200 W	12,000 W
Circuit breaker	30 A	50 A
Volts	208 – 240 V	208 240 V
Frequency	60 Hz	60 Hz
Plug type	No plug	No plug
Power cord length	37"	37"
Energy source	Electric	Electric
Dimensions & Weight		
Overall appliance dimensions (HxWxD)	1/4" +4 1/8" x 31" x 21 1/4"	5/16" +4 1/8" x 37" x 21 1/4"
Required cutout size (HxWxD)	4 1/8" x 28 7/8" x 20"	4 1/8" x 34 7/8" x 20"
Minimum distance from counter front	2 1/4"	2 1/4"
Minimum distance from rear wall	2"	2"
Net weight	43 lbs	53 lbs

*For 30" model Boost function may be used simultaneously in 2 zones only. See User Manual.
**For 36" model Boost function may be used simultaneously in 3 zones only. See User Manual.

Optional Accessories

HEZ390512
Teppanyaki

HEZ390210
8" AutoChef® pan
for 6" element

HEZ390220
9" AutoChef® pan*
for 7" element

HEZ390230
10" AutoChef® pan
for 8" and 9" elements

*For use with 36" models

Benchmark® Series Induction Cooktops

30" Cooktop and Cutout Dimensions

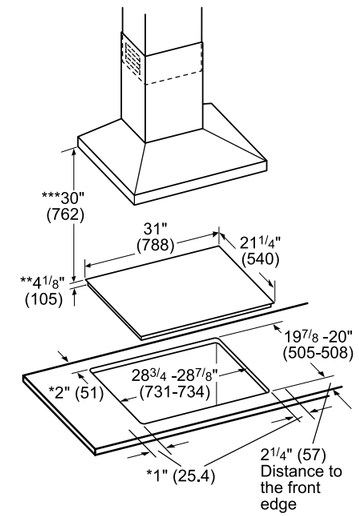

* Minimum distance from the cooktop cutout to the wall
** Installed depth includes 1" (26 mm) air clearance
*** Minimum distance between surface of the cooktop and lower edge of the exhaust hood.

Dimensions in inches (mm)

36" Cooktop and Cutout Dimensions

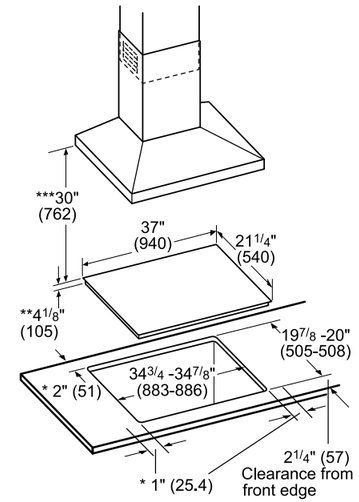

* Minimum clearance from the cooktop cutout to the wall
** Installed depth includes gap of 1" (26 mm) to the ventilation
*** Minimum clearance between surface of the cooktop and lower edge of the exhaust hood.

measurements in inches (mm)

30" & 36" Cooktop Installation Above Wall Oven

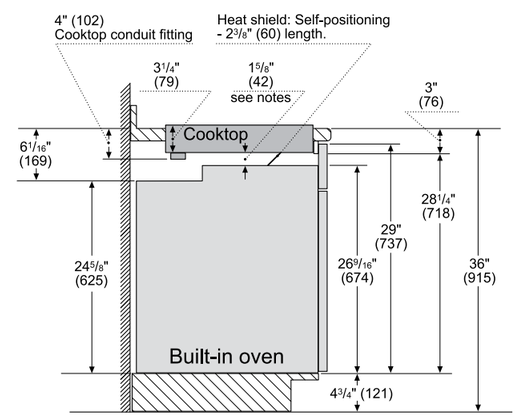

Notes:

Dimensions based on standard countertop height (36" with 4 3/4" toe kick including base plate).

The built-in oven can be installed below the induction cooktop as long as there is a minimum 1" (26) clearance between the bottom of the cooktop and the top of the oven.

Electrical Location

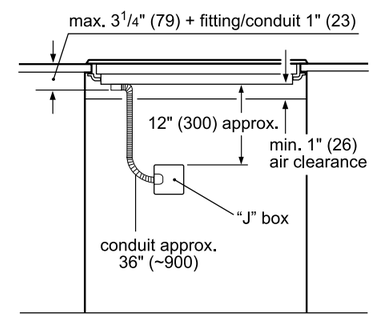

Measurements in inches (mm)

measurements in inches (mm)

500 Series 24" Induction Cooktop

24" 500 Series
NIT5469UC

- 11" Cooking Zone
- 17 Power Levels
- Each Cooking Zone Has an Independent Countdown Timer
- SpeedBoost®

	500 Series
	Black – NIT5469UC
Element Performance	
Power of back left heating element	2,600 W
Power of back left heating element (in boost)	3,700 W
Power of back right heating element	1,800 W
Power of back right heating element (in boost)	3,100 W
Power of front right heating element	1,400 W
Power of front right heating element (in boost)	2,200 W
Burners with booster	All
Element Size	
Dimension of back left heating element	11"
Dimension of back right heating element	7"
Dimension of front right heating element	6"
Technical Details	
Watts	7,200 W
Circuit breaker	30 A
Volts	208 – 240 V
Frequency	60 Hz
Plug type	No plug
Power cord length	37"
Energy source	Electric
Dimensions & Weight	
Overall appliance dimensions (HxWxD)	1/4" +4 1/8" x 24" x 20 9/16"
Required cutout size (HxWxD)	4 1/8" x 22" x 19 1/4"
Minimum distance from counter front	2 1/4"
Minimum distance from rear wall	2"
Net weight	24 lbs

Optional Accessories

HEZ390210
8" AutoChef® pan
for 6" element

HEZ390220
9" AutoChef® pan
for 7" element

HEZ390230
10" AutoChef® pan
for 8" and 9" elements

500 Series 24" Induction Cooktop

24" Cooktop and Cutout Dimensions

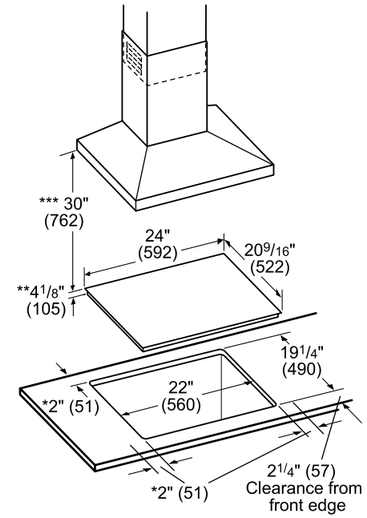

* Minimum clearance from the cooktop cutout to the wall
** Installed depth includes a gap of 1" (26 mm) for ventilation
*** Minimum clearance between the cooktop surface and lower edge of the exhaust hood.

measurements in inches (mm)

24" Cooktop Installation Above Wall Oven

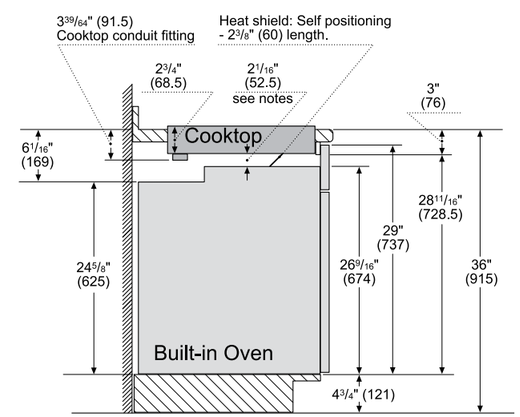

Notes:

Dimensions based on standard countertop height (36" with 4 3/4" toe kick including base plate).

The built-in oven can be installed below the induction cooktop as long as there is a minimum 1" (26) clearance between the bottom of the cooktop and the top of the oven.

measurements in inches (mm)

Electrical Location

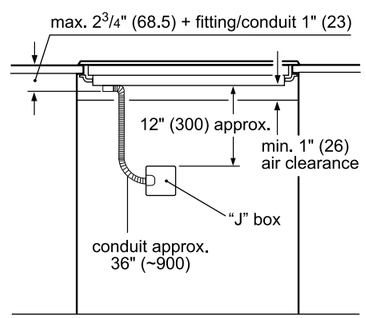

measurements in inches (mm)

500 / 800 Series 30" Induction Cooktops

30" 500 Series
NIT5068UC

- 11" Cooking Zone
- 17 Power Levels
- Each Cooking Zone Has an Independent Countdown Timer
- SpeedBoost®

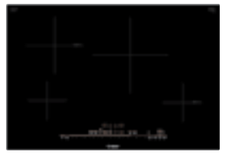

30" 800 Series
NIT8069UC (Frameless)
NIT8069SUC (Frame)

+AutoChef®
+Home Connect™
+Hood Control
+PreciseSelect® Control
+Framed and Frameless Options

+Indicates a step-up feature

	500 Series	800 Series
	Black – NIT5068UC	Black – NIT8069UC Black with Stainless Steel Frame – NIT8069SUC
General Properties		
Home Connect™ (Wi-Fi Enabled)	No	Yes
Controls	Touch	PreciseSelect® Touch
Element Performance		
Power of front left heating element	1,400 W	1,400 W
Power of front left heating element (in boost)	2,200 W	2,200 W
Power of back left heating element	2,200 W	2,200 W
Power of back left heating element (in boost)	3,700 W	3,700 W
Power of back right heating element	2,600 W	2,600 W
Power of back right heating element (in boost)	3,700 W	3,700 W
Power of front right heating element	1,400 W	1,400 W
Power of front right heating element (in boost)	2,200 W	2,200 W
Burners with booster	All	All
Element Size		
Dimension of front left heating element	6"	6"
Dimension of back left heating element	9"	9"
Dimension of back right heating element	11"	11"
Dimension of front right heating element	6"	6"
Technical Details		
Watts	7,200 W	7,200 W
Circuit breaker	30 A	30 A
Volts	208 – 240 V	208 – 240 V
Frequency	60 Hz	60 Hz
Plug type	No plug	No plug
Power cord length	37"	37"
Energy source	Electric	Electric
Dimensions & Weight		
Overall appliance dimensions (HxWxD)	1/4" +4 1/8" x 31" x 21 1/4"	1/4" +4 1/8" x 31" x 21 1/4"
Required cutout size (HxWxD)	4 1/8" x 28 7/8" x 20"	4 1/8" x 28 7/8" x 20"
Minimum distance from counter front	2 1/4"	2 1/4"
Minimum distance from rear wall	2"	2"
Net weight	41 lbs	41 lbs

Optional Accessories

HEZ390210
8" AutoChef® pan
for 6" element

HEZ390220
9" AutoChef® pan
for 7" element

HEZ390230
10" AutoChef® pan
for 8" and 9" elements

500 / 800 Series 30" Induction Cooktops

30" Cooktop and Cutout Dimensions

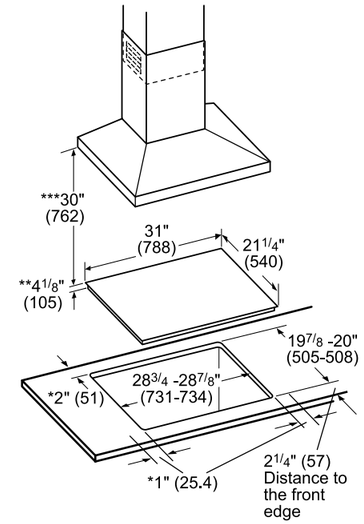

* Minimum distance from the cooktop cutout to the wall
** Installed depth includes 1" (26 mm) air clearance
*** Minimum distance between surface of the cooktop and lower edge of the exhaust hood.

Dimensions in inches (mm)

30" Cooktop Installation Above Wall Oven

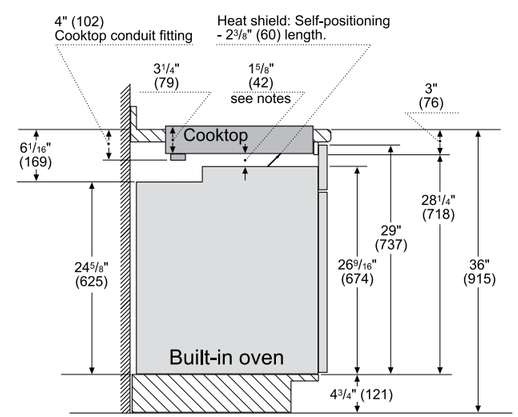

Notes:

Dimensions based on standard countertop height (36" with 4 3/4" toe kick including base plate).

The built-in oven can be installed below the induction cooktop as long as there is a minimum 1" (26) clearance between the bottom of the cooktop and the top of the oven.

Electrical Location

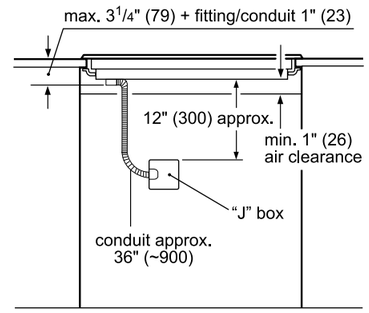

Measurements in inches (mm)

500 / 800 Series 36" Induction Cooktops

36" 500 Series
NIT5668UC

- 12" Dual-Ring Center Cooking Zone
- 17 Power Levels
- Each Cooking Zone Has an Independent Countdown Timer
- SpeedBoost®

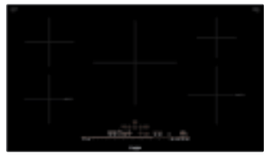

36" 800 Series
NIT8669UC (Frameless)
NIT8669SUC (Frame)

+ AutoChef®
+ Home Connect™
+ Hood Control
+ PreciseSelect® Control
+ Framed and Frameless Options

Home connect

+ Indicates a step-up feature

	500 Series	800 Series
	Black – NIT5668UC	Black – NIT8669UC Black with Stainless Steel Frame – NIT8669SUC
General Properties		
Home Connect™ (Wi-Fi Enabled)	No	Yes
Controls	Touch	PreciseSelect® Touch
Element Performance		
Power of front left heating element (in boost)	1,800 W (3,100 W)	1,800 W (3,100 W)
Power of back left heating element (in boost)	1,800 W (3,100 W)	1,800 W (3,100 W)
Power of center heating element (in boost)	3,300 / 2,200 W (5,400 / 3,700 W)	3,300 / 2,200 W (5,400 / 3,700 W)
Power of back right heating element (in boost)	1,400 W (2,200 W)	1,400 W (2,200 W)
Power of front right heating element (in boost)	2,200 W (3,700 W)	2,200 W (3,700 W)
Burners with booster	All	All
Element Size		
Dimension of front left heating element	7"	7"
Dimension of back left heating element	7"	7"
Dimension of center heating element	12", 9"	12", 9"
Dimension of back right heating element	6"	6"
Dimension of front right heating element	9"	9"
Technical Details		
Watts	9,600 W	9,600 W
Circuit breaker	40 A	40 A
Volts	208 – 240 V	208 – 240 V
Frequency	60 Hz	60 Hz
Plug type	No plug	No plug
Power cord length	37"	37"
Energy source	Electric	Electric
Dimensions & Weight		
Overall appliance dimensions (HxWxD)	5/16" +4 1/8" x 37" x 21 1/4"	5/16" +4 1/8" x 37" x 21 1/4"
Required cutout size (HxWxD)	4 1/8" x 34 7/8" x 20"	4 1/8" x 34 7/8" x 20"
Minimum distance from counter front	2 1/4"	2 1/4"
Minimum distance from rear wall	2"	2"
Net weight	53 lbs	53 lbs

Optional Accessories

HEZ390210
8" AutoChef® pan
for 6" element

HEZ390220
9" AutoChef® pan
for 7" element

HEZ390230
10" AutoChef® pan
for 8" and 9" elements

500 / 800 Series 36" Induction Cooktops

36" Cooktop and Cutout Dimensions

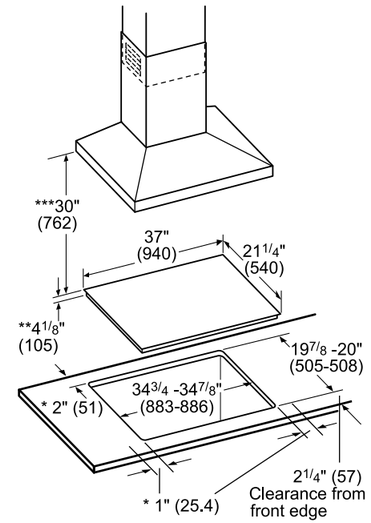

* Minimum clearance from the cooktop cutout to the wall
** Installed depth includes gap of 1" (26 mm) to the ventilation
*** Minimum clearance between surface of the cooktop and lower edge of the exhaust hood.

measurements in inches (mm)

36" Cooktop Installation Above Wall Oven

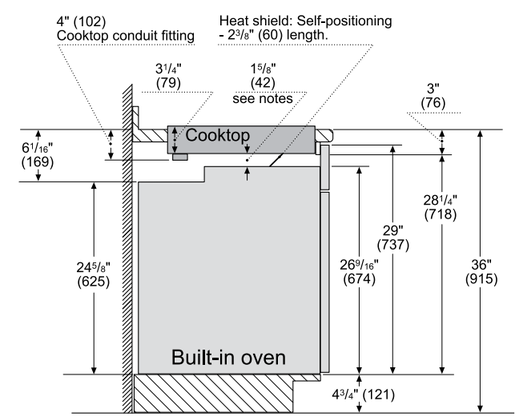

Notes:

Dimensions based on standard countertop height (36" with 4 3/4" toe kick including base plate).

The built-in oven can be installed below the induction cooktop as long as there is a minimum 1" (26) clearance between the bottom of the cooktop and the top of the oven.

Electrical Location

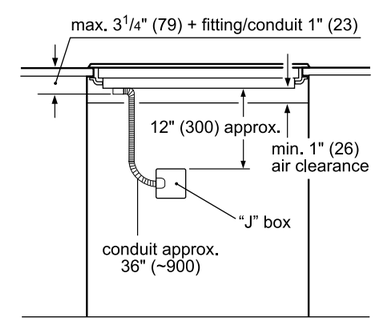

Measurements in inches (mm)

Benchmark® Series Gas Cooktops

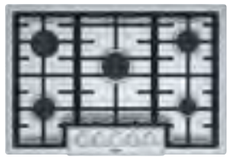

30" Benchmark® Series
NGMP056UC

- 20K Max. BTU Performance
- 5 Burners
- Dual-Stacked Hi / Lo Burner
- Distinctive Red LED Light Burner Indicators

36" Benchmark® Series
NGMP656UC

- 20K Max. BTU Performance
- 5 Burners
- Dual-Stacked Hi / Lo Burner
- Distinctive Red LED Light Burner Indicators

	30"	36"
	Stainless Steel – NGMP056UC	Stainless Steel – NGMP656UC
General Properties		
Knob material	Metal	Metal
Sealed burners	Yes	Yes
Grate material	Cast iron	Cast iron
Element Performance		
Total BTU load (NG / LP)	51,000 / 43,200	59,500 / 47,300
Power of front left burner (NG / LP)	10,000 / 9,100	12,000 / 9,100
Power of back left burner (NG / LP)	5,500 / 5,000	10,000 / 9,100
Power of center burner (NG / LP)	20,000 / 15,000	20,000 / 15,000
Power of back right burner (NG / LP)	10,000 / 9,100	5,500 / 5,000
Power of front right burner (NG / LP)	5,500 / 5,000	12,000 / 9,100
Technical Details		
Watts	360 W	360 W
Circuit breaker	15 A	15 A
Volts	120 V	120 V
Frequency	60 Hz	60 Hz
Plug type	3 prong	3 prong
Power cord length	60"	60"
Energy source	Gas	Gas
Convertible to LP (kit required)	Yes	Yes
Dimensions & Weight		
Overall appliance dimensions (HxWxD)	3 13/16" x 31" x 21 1/4"	3 13/16" x 37" x 21 1/4"
Required cutout size (HxWxD)	3 13/16" x 28 15/16" x 19 1/8"	3 13/16" x 34 15/16" x 19 1/8"
Minimum distance from counter front	1 7/8"	1 7/8"
Minimum distance from rear wall	3"	3"
Net weight	38 lbs	39 lbs
Accessories – Included		
Included	LP conversion kit	LP conversion kit

Optional Accessories

HEZ298102
Wok ring
(For use with 36" NGMP656UC only)

HEZGR301
Griddle
(For use with 36" NGMP656UC only)

Benchmark® Series Gas Cooktops

30" Cooktop and Cutout Dimensions

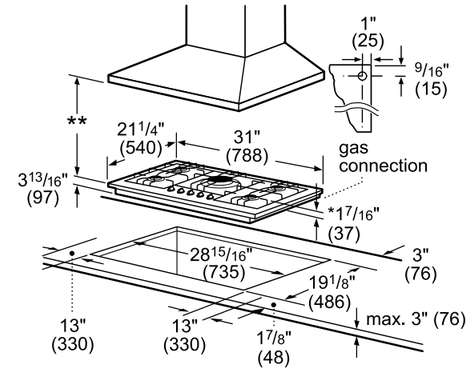

* Dimension from countertop to top of grates in front of 1 7/16" (37).
** When installed in combination with a hood, refer to hood manufacturers requirements for installation.

Measurement in inches (mm)

36" Cooktop and Cutout Dimensions

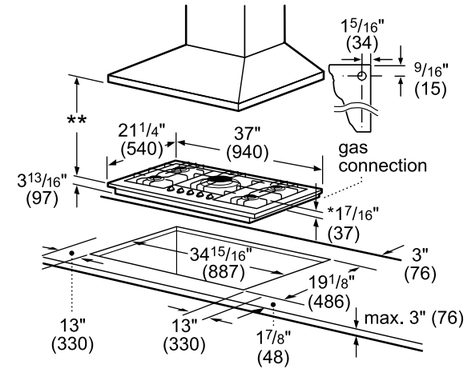

* Dimension from countertop to top of grates in front of 1 7/16" (37).
** When installed in combination with a hood, refer to hood manufacturers requirements for installation.

Measurement in inches (mm)

30" & 36" Cooktop Installation Above Wall Oven

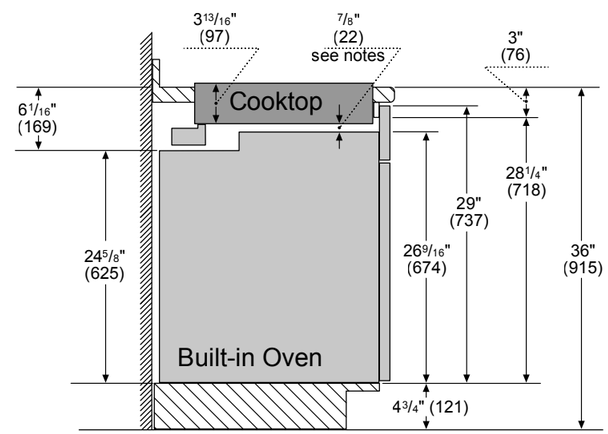

Notes:

Dimensions based on standard countertop height (36" with 4 3/4" toe kick including base plate).

The built-in oven can be installed below the gas cooktop as long as there is no contact between the bottom of the cooktop and the top of the oven.

Measurements in inches (mm)

Gas Location

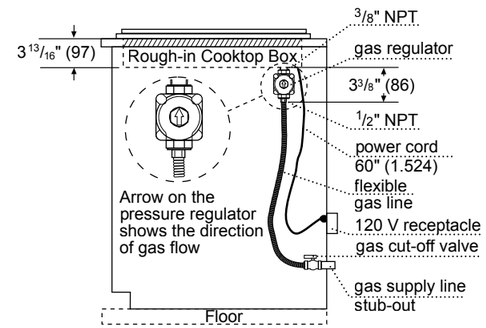

Measurements in inches (mm)

500 Series 24" Gas Cooktop

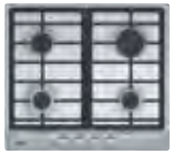

24" 500 Series
NGM5456UC

- 11.5K Max. BTU Performance
- 4 Burners
- Metal Knobs

	500 Series
	Stainless Steel – NGM5456UC
General Properties	
Knob material	Metal
Sealed burners	Yes
Grate material	Cast iron
Element Performance	
Total BTU load (NG / LP)	30,800 / 27,000
Power of front left burner (NG / LP)	5,000 / 5,000
Power of back left burner (NG / LP)	9,300 / 7,000
Power of center burner (NG / LP)	N/A
Power of back right burner (NG / LP)	11,500 / 10,000
Power of front right burner (NG / LP)	5,000 / 5,000
Technical Details	
Watts	360 W
Circuit breaker	15 A
Volts	120 V
Frequency	60 Hz
Plug type	3 prong
Power cord length	60"
Energy source	Gas
Convertible to LP (kit required)	Yes
Dimensions & Weight	
Overall appliance dimensions (HxWxD)	2 3/4" x 23" x 20 1/2"
Required cutout size (HxWxD)	2 3/4" x 20 7/8" x 19 1/4"
Minimum distance from counter front	1 3/4"
Minimum distance from rear wall	3"
Net weight	32 lbs
Accessories – Included	
Included	LP conversion kit

500 Series 24" Gas Cooktop

24" Cooktop and Cutout Dimensions

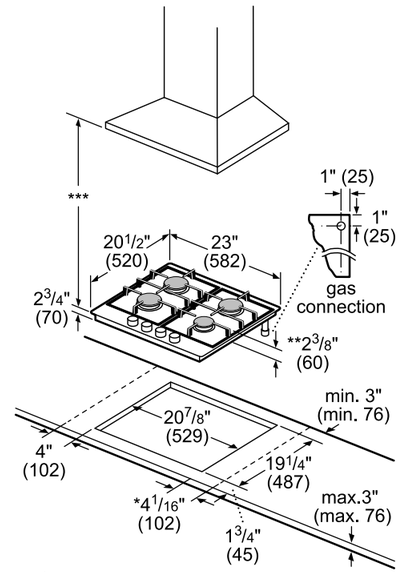

* 5 1/16" required when installed with a built-in oven. Reference the Bosch under cooktop built-in guide for more details.

** Dimension from countertop to top of grates.
*** When installed in combination with a hood, refer to hood manufacturer's requirements for installation.

Measurements in inches (mm)

24" Cooktop Gas Location

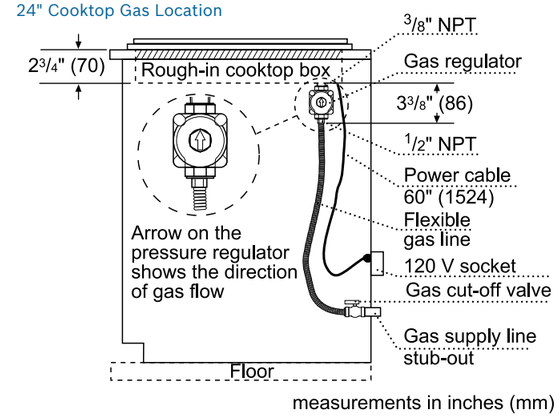

measurements in inches (mm)

24" Cooktop Installation Above Wall Oven

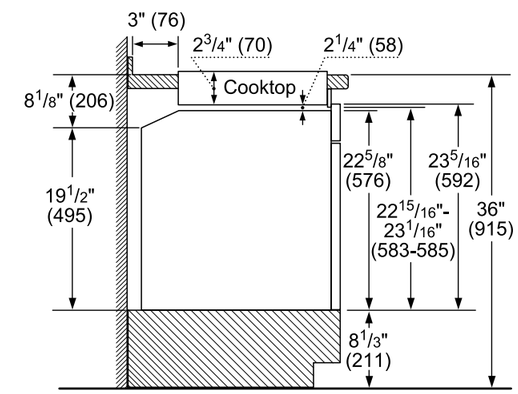

Notes: Dimensions based on standard countertop height (36" with 4 3/4" toe kick including base plate).

The built-in oven can be installed below the cooktop as long as there is at least 2 1/4" (58) of space between the bottom flat surface of the cooktop and the top of the oven.

Please allow at least 2" (51) from the countertop front edge to the edge of the cutout.

measurements in inches (mm)

500 / 800 Series 30" Gas Cooktops

30" 500 Series
NGM5056UC

- 16K Max. BTU Performance
- Black Metal Knobs
- OptiSim® burner

30" 800 Series
NGM8056UC (Stainless Steel)
NGM8046UC (Black w/Black Stainless Knobs)

+ 19K Max. BTU Performance
+ 5 Burners
+ Distinctive Red LED Light Burner Indicators
+ Stainless Steel Knobs (Black Stainless Metal Knobs on Black Model)

+ Indicates a step-up feature

	500 Series	800 Series
	Stainless Steel – NGM5056UC	Stainless Steel – NGM8056UC Black w/Black Stainless Knobs – NGM8046UC
General Properties		
Knob material	Metal	Metal
Sealed burners	Yes	Yes
Grate material	Cast iron	Cast iron
Element Performance		
Total BTU load (NG / LP)	41,500 / 38,200	NGM8056UC: 50,000 / 43,200 NGM8046UC: 48,600 / 43,200
Power of front left burner (NG / LP)	10,000 / 9,100	NGM8056UC: 10,000 / 9,100 NGM8046UC: 9,300 / 9,100
Power of back left burner (NG / LP)	10,000 / 9,100	5,500 / 5,000
Power of center burner (NG / LP)	N/A	18,000 / 15,000
Power of back right burner (NG / LP)	5,500 / 5,000	NGM8056UC: 10,000 / 9,100 NGM8046UC: 9,300 / 9,100
Power of front right burner (NG / LP)	16,000 / 15,000	5,500 / 5,000
Technical Details		
Watts	360 W	360 W
Circuit breaker	15 A	15 A
Volts	120 V	120 V
Frequency	60 Hz	60 Hz
Plug type	3 prong	3 prong
Power cord length	60"	60"
Energy source	Gas	Gas
Convertible to LP (kit required)	Yes	Yes
Dimensions & Weight		
Overall appliance dimensions (HxWxD)	3 13/16" x 31" x 21 1/4"	3 13/16" x 31" x 21 1/4"
Required cutout size (HxWxD)	3 13/16" x 28 15/16" x 19 1/8"	3 13/16" x 28 15/16" x 19 1/8"
Minimum distance from counter front	1 7/8"	1 7/8"
Minimum distance from rear wall	3"	3"
Net weight	37 lbs	37 lbs
Accessories – Included		
Included	LP conversion kit	LP conversion kit

500 / 800 Series 30" Gas Cooktops

30" Cooktop and Cutout Dimensions

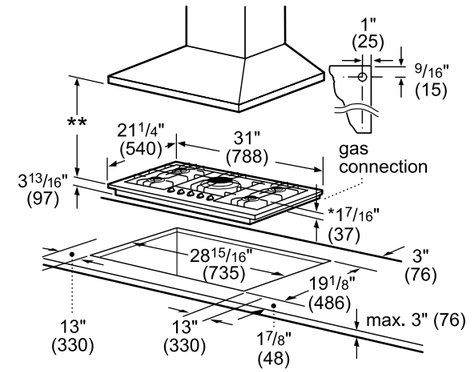

* Dimension from countertop to top of grates in front of 1 7/16" (37).
** When installed in combination with a hood, refer to hood manufacturers requirements for installation.

Measurement in inches (mm)

30" Cooktop Gas Location

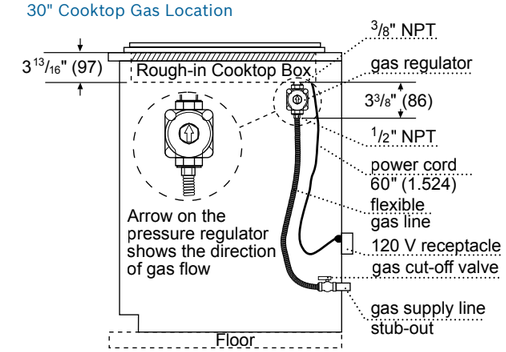

Measurements in inches (mm)

30" Cooktop Installation Above Wall Oven

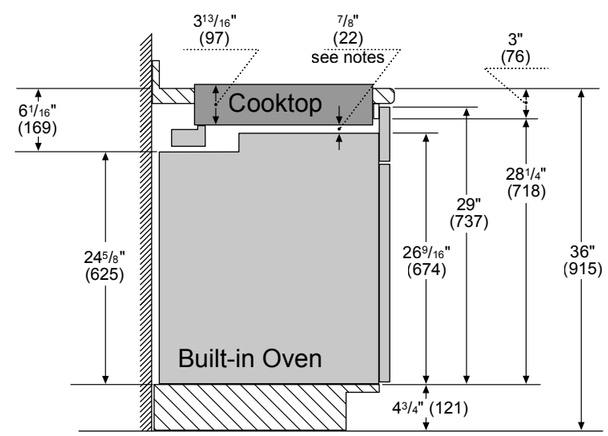

Notes:

Dimensions based on standard countertop height (36" with 4 3/4" toe kick including base plate).

The built-in oven can be installed below the gas cooktop as long as there is no contact between the bottom of the cooktop and the top of the oven.

Measurements in inches (mm)

500 / 800 Series 36" Gas Cooktops

36" 500 Series
NGM5656UC

- 16K Max. BTU Performance
- Black Metal Knobs
- OptiSim® burner

36" 800 Series
NGM8656UC (Stainless Steel)
NGM8646UC (Black w/Black Stainless Knobs)

+ 19K Max. BTU Performance
+ Distinctive Red LED Light Burner Indicators
+ Stainless Steel Knobs (Black Stainless Metal Knobs on Black Model)

+ Indicates a step-up feature

	500 Series	800 Series
	Stainless Steel – NGM5656UC	Stainless Steel – NGM8656UC Black w/Black Stainless Knobs – NGM8646UC
General Properties		
Knob material	Metal	Metal
Sealed burners	Yes	Yes
Grate material	Cast iron	Cast iron
Element Performance		
Total BTU load (NG / LP)	51,500 / 47,300	NGM8656UC: 58,500 / 47,300 NGM8646UC: 52,400 / 47,300
Power of front left burner (NG / LP)	10,000 / 9,100	NGM8656UC: 12,000 / 9,100 NGM8646UC: 9,300 / 9,100
Power of back left burner (NG / LP)	10,000 / 9,100	NGM8656UC: 10,000 / 9,100 NGM8646UC: 9,300 / 9,100
Power of center burner (NG / LP)	16,000 / 15,000	19,000 / 15,000
Power of back right burner (NG / LP)	5,500 / 5,000	5,500 / 5,000
Power of front right burner (NG / LP)	10,000 / 9,100	NGM8656UC: 12,000 / 9,100 NGM8646UC: 9,300 / 9,100
Technical Details		
Watts	360 W	360 W
Circuit breaker	15 A	15 A
Volts	120 V	120 V
Frequency	60 Hz	60 Hz
Plug type	3 prong	3 prong
Power cord length	60"	60"
Energy source	Gas	Gas
Convertible to LP (kit required)	Yes	Yes
Dimensions & Weight		
Overall appliance dimensions (HxWxD)	3 13/16" x 37" x 21 1/4"	3 13/16" x 37" x 21 1/4"
Required cutout size (HxWxD)	3 13/16" x 34 15/16" x 19 1/8"	3 13/16" x 34 15/16" x 19 1/8"
Minimum distance from counter front	1 7/8"	1 7/8"
Minimum distance from rear wall	3"	3"
Net weight	39 lbs	39 lbs
Accessories – Included		
Included	LP conversion kit	LP conversion kit

Optional Accessories

HEZ298102
Wok ring

HEZGR301
Griddle

500 / 800 Series 36" Gas Cooktops

36" Cooktop and Cutout Dimensions

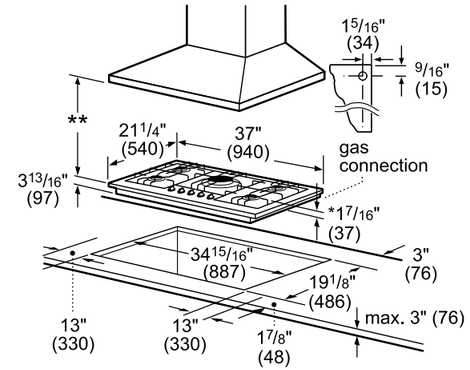

* Dimension from countertop to top of grates in front of 1 7/16" (37).
** When installed in combination with a hood, refer to hood manufacturers requirements for installation.

Measurement in inches (mm)

36" Gas Location

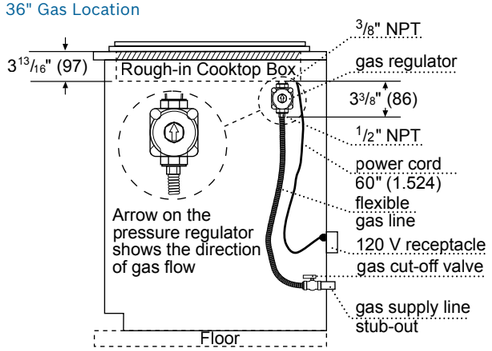

Measurements in inches (mm)

36" Cooktop Installation Above Wall Oven

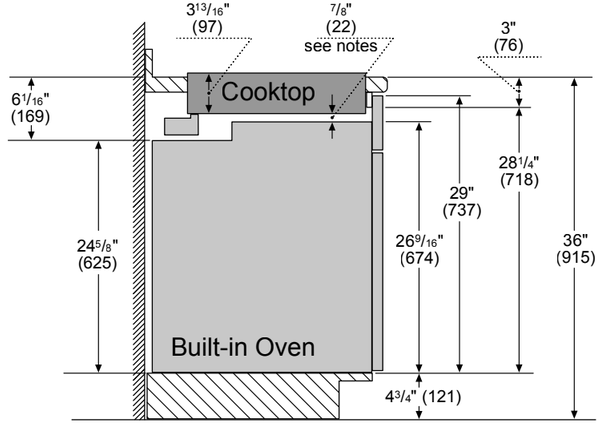

Notes:

Dimensions based on standard countertop height (36" with 4 3/4" toe kick including base plate).

The built-in oven can be installed below the gas cooktop as long as there is no contact between the bottom of the cooktop and the top of the oven.

Measurements in inches (mm)

Benchmark® Series Electric Cooktops

30" Benchmark® Series
NETP068SUC

- Five Elements
- 9", 3,600 W Dual-Ring Element
- 7", 2,000 W Dual-Ring Element
- AutoChef®
- SpeedBoost®

36" Benchmark® Series
NETP668SUC

- Five Elements
- 11", 3,080 W Triple-Ring Element
- 8", 1,900 W Dual-Ring Element
- AutoChef®
- + Bridge Element

	30"	36"
	Black with Stainless Steel Frame – NETP068SUC	Black with Stainless Steel Frame – NETP668SUC
Element Performance		
Power of front left heating element	2,000 / 800 W	1,800 W
Power of back left heating element	1,200 W	1,800 W
Power of center heating element	3,600 / 1,400 W	3,080 / 2,200 / 1,050 W
Power of back right heating element	1,200 W	1,200 W
Power of front right heating element	1,500 W	1,900 / 800 W
Element Size		
Dimension of front left heating element	7", 5"	7"
Dimension of back left heating element	6"	7"
Dimension of center heating element	9", 6"	11", 8", 6"
Dimension of back right heating element	6"	6"
Dimension of front right heating element	7"	8", 5"
Technical Details		
Watts	9,000 W	9,700 W
Circuit breaker	40 A	40 A
Volts	208 – 240 V	208 – 240 V
Frequency	60 Hz	60 Hz
Plug type	No plug	No plug
Energy source	Electric	Electric
Dimensions & Weight		
Overall appliance dimensions (HxWxD)	1/4" +4" x 31" x 21 1/4"	1/4" +4" x 37" x 21 1/4"
Required cutout size (HxWxD)	4" x 28 7/8" x 20"	4" x 34 7/8" x 20"
Minimum distance from counter front	2 1/4"	2 1/4"
Minimum distance from rear wall	2"	2"
Net weight	32 lbs	33 lbs

Optional Accessories

HEZ390210
8" AutoChef® pan
for 6" element

HEZ390220
9" AutoChef® pan
for 7" element

HEZ390230
10" AutoChef® pan
for 8" and 9" elements

Benchmark® Series Electric Cooktops

30" Cooktop and Cutout Dimensions

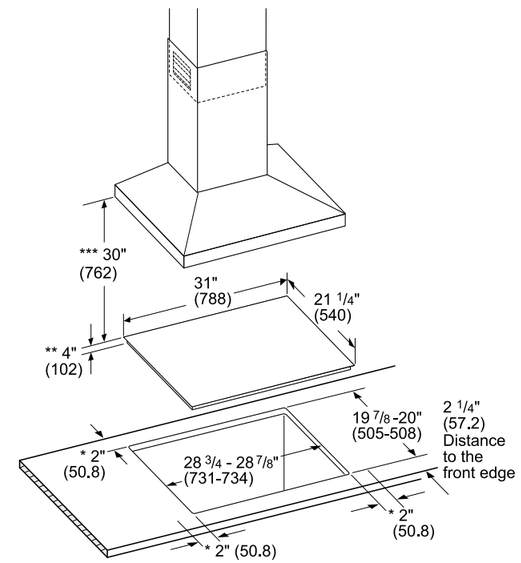

* Minimum distance from the cooktop cutout to the wall
** Maximum cutout depth
*** Minimum distance between the cooktop surface and lower edge of the exhaust hood.

Dimensions in inches (mm)

36" Cooktop and Cutout Dimensions

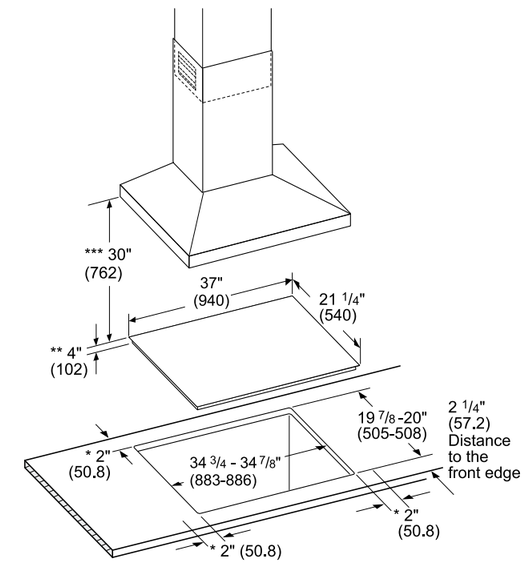

* Minimum distance from the cooktop cutout to the wall
** Maximum cutout depth
*** Minimum distance between the cooktop surface and lower edge of the exhaust hood.

Dimensions in inches (mm)

Cooktop Installation Above Wall Oven

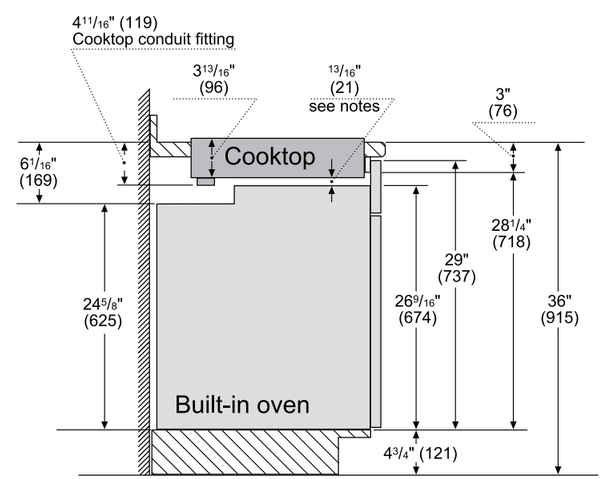

Notes:

Dimensions based on standard countertop height (36" with 4 3/4" toe kick including base plate).

The built-in oven can be installed below the electric cooktop as long as there is no contact between the bottom of the cooktop and the top of the oven.

measurements in inches (mm)

Electrical Location

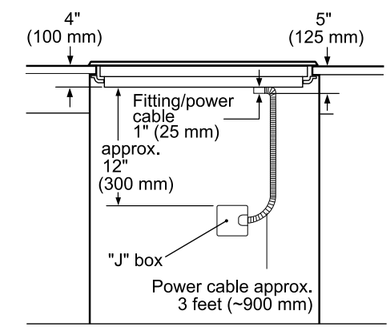

measurement in inches (mm)

500 Series 24" Electric Cooktop

24" 500 Series
NEM5466UC

- 8", 2,200 W Element
- 6", 1,850 W Element
- Residual Heat Indicator
- Stainless Steel Color Knobs

	500 Series
	Black Frameless – NEM5466UC
General Properties	
Knob material	Plastic
Element Performance	
Power of front left heating element	1,850 W
Power of back left heating element	2,200 W
Power of back right heating element	1,200 W
Power of front right heating element	1,800 W
Element Size	
Dimension of front left heating element	6"
Dimension of back left heating element	8"
Dimension of back right heating element	6"
Dimension of front right heating element	7"
Technical Details	
Watts	7,100 W
Circuit breaker	30 A
Volts	208–240 V
Frequency	60 Hz
Plug type	No plug
Energy source	Electric
Dimensions & Weight	
Overall appliance dimensions (HxWxD)	1/8" +4 1/3" x 23" x 20 1/5"
Required cutout size (HxWxD)	4 1/3" x 22" x 19 1/4"
Minimum distance from counter front	2 1/4"
Minimum distance from rear wall	2"
Net weight	24 lbs

Optional Accessories

HEZ390210
8" AutoChef® pan
for 6" element

HEZ390220
9" AutoChef® pan
for 7" element

HEZ390230
10" AutoChef® pan
for 8" and 9" elements

500 Series 24" Electric Cooktop

Cooktop and Cutout Dimensions

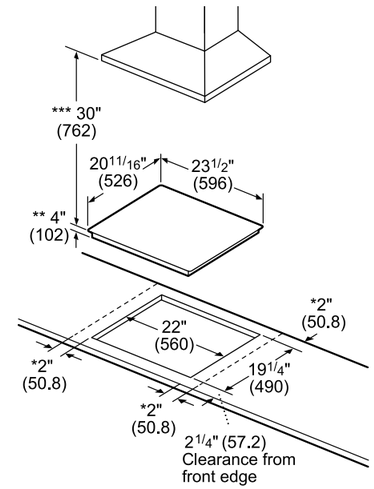

* Minimum clearance from the cooktop cutout to the wall
** Maximum cutout depth
*** Minimum clearance between the cooktop surface and lower edge of the exhaust hood.

measurements in inches (mm)

Gas Location

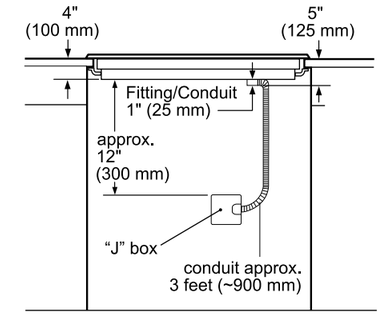

measurement in inches (mm)

Cooktop Installation Above Wall Oven

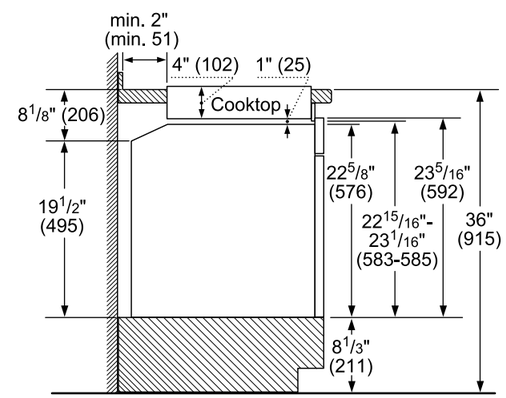

Notes: Dimensions based on standard countertop height (36" with 4 3/4" toe kick including base plate).

The built-in oven can be installed below the cooktop as long as there is at least 1" (25) of space between the bottom flat surface of the cooktop and the top of the oven.

Please allow at least 2" (51) from the countertop front edge to the edge of the cutout.

measurements in inches (mm)

500 / 800 Series 30" Electric Cooktops

30" 500 Series
NEM5066UC

- 7" Dual-Ring Element
- 9", 2,500 W Element
- Residual Heat Indicator
- Stainless Steel Color Knobs

30" 800 Series
NET8068UC (Frameless)
NET8068SUC (Frame)

+ PreciseSelect® Control
+ 9", 3,600 W Dual-Ring Element
+ Countdown Element Shut Off Timer
+ Framed and Frameless Options

+ Indicates a step-up feature

	500 Series	800 Series
	Black Frameless – NEM5066UC	Black Frameless – NET8068UC Black with Stainless Steel Frame – NET8068SUC
General Properties		
Knob material	Stainless steel color – plastic	N/A
Element Performance		
Power of front left heating element	1,700 / 700 W	1,800 W
Power of back left heating element	1,800 W	1,800 W
Power of back right heating element	1,200 W	3,600 / 1,400 W
Power of front right heating element	2,500 W	1,200 W
Element Size		
Dimension of front left heating element	7", 5"	7"
Dimension of back left heating element	7"	7"
Dimension of back right heating element	6"	9", 6"
Dimension of front right heating element	9"	6"
Technical Details		
Watts	7,200 W	8,300 W
Circuit breaker	30 A	40 A
Volts	208–240 V	208–240 V
Frequency	60 Hz	60 Hz
Plug type	No plug	No plug
Energy source	Electric	Electric
Dimensions & Weight		
Overall appliance dimensions (HxWxD)	1/4" +4" x 31" x 21 1/4"	1/4" +4" x 31" x 21 1/4"
Required cutout size (HxWxD)	4" x 28 7/8" x 20"	4" x 28 7/8" x 20"
Minimum distance from counter front	2 1/4"	2 1/4"
Minimum distance from rear wall	2"	2"
Net weight	25 lbs	31 lbs

Optional Accessories

HEZ390210
8" AutoChef® pan
for 6" element

HEZ390220
9" AutoChef® pan
for 7" element

HEZ390230
10" AutoChef® pan
for 8" and 9" elements

500 / 800 Series 30" Electric Cooktops

30" Cooktop and Cutout Dimensions

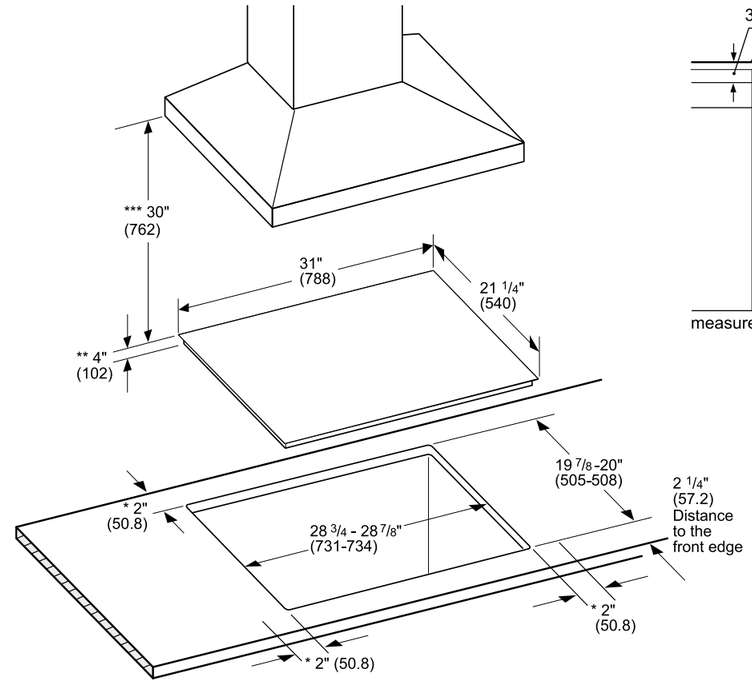

* Minimum distance from the cooktop cutout to the wall
** Maximum cutout depth
*** Minimum distance between the cooktop surface and lower edge of the exhaust hood.

Dimensions in inches (mm)

500 Series – Cooktop Electrical Location

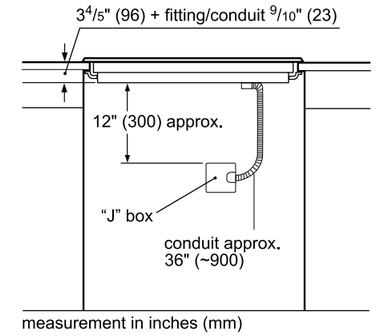

measurement in inches (mm)

Cooktop Installation Above Wall Oven

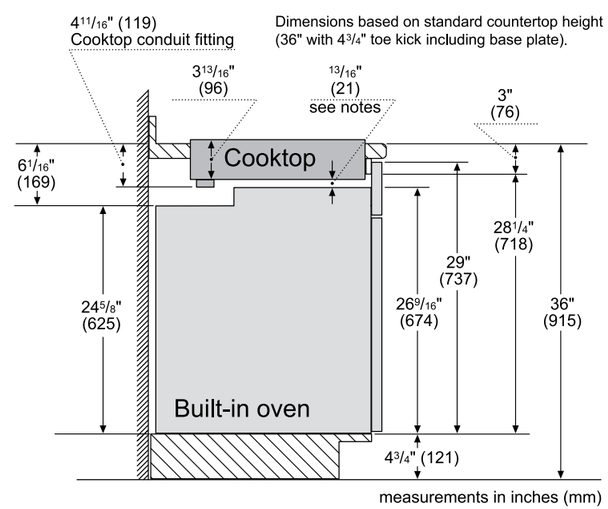

measurements in inches (mm)

The built-in oven can be installed below the electric cooktop as long as there is no contact between the bottom of the cooktop and the top of the oven.

800 Series – Cooktop Electrical Location

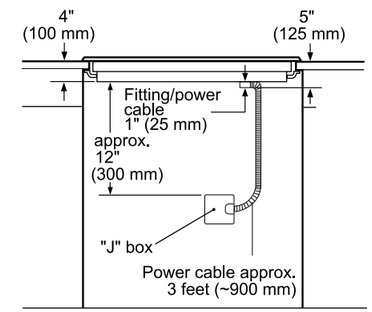

measurement in inches (mm)

500 / 800 Series 36" Electric Cooktops

36" 500 Series
NEM5666UC

- Residual Heat Indicator
- 9", 2,500 W Dual-Ring Element
- 7", 1,700 W Dual-Ring Element
- Stainless Steel Color Knobs

36" 800 Series
NET8668UC (Frameless)
NET8668SUC (Frame)

+ PreciseSelect® Control
+ 9", 3,600 W Center Element
+ Countdown Element Shut Off Timer
+ Framed and Frameless Options
+ SpeedBoost®

+ Indicates a step-up feature

	500 Series	800 Series
	Black Frameless – NEM5666UC	Black Frameless – NET8668UC Black with Stainless Steel Frame – NET8668SUC
General Properties		
Knob material	Stainless steel color – plastic	N/A
Element Performance		
Power of front left heating element	1,700 / 700 W	1,800 W
Power of back left heating element	1,800 W	1,800 W
Power of center heating element	1,800 W	3,600 / 1,400 W
Power of back right heating element	1,200 W	1,200 W
Power of front right heating element	2,500 / 1,100 W	1,900 / 800 W
Element Size		
Dimension of front left heating element	7", 5"	7"
Dimension of back left heating element	7"	7"
Dimension of center heating element	7"	9", 6"
Dimension of back right heating element	6"	6"
Dimension of front right heating element	9", 6"	8", 5"
Technical Details		
Watts	9,000 W	10,200 W
Circuit breaker	40 A	50 A
Volts	208–240 V	208–240 V
Frequency	60 Hz	60 Hz
Plug type	No plug	No plug
Energy source	Electric	Electric
Dimensions & Weight		
Overall appliance dimensions (HxWxD)	1/4" +4" x 37" x 21 1/4"	1/4" +4" x 37" x 21 1/4"
Required cutout size (HxWxD)	4" x 34 7/8" x 20"	4" x 34 7/8" x 20"
Minimum distance from counter front	2 1/4"	2 1/4"
Minimum distance from rear wall	2"	2"
Net weight	30 lbs	37 lbs

Optional Accessories

HEZ390210
8" AutoChef® pan
for 6" element

HEZ390220
9" AutoChef® pan
for 7" element

HEZ390230
10" AutoChef® pan
for 8" and 9" elements

500 / 800 Series 36" Electric Cooktops

36" Cooktop and Cutout Dimensions

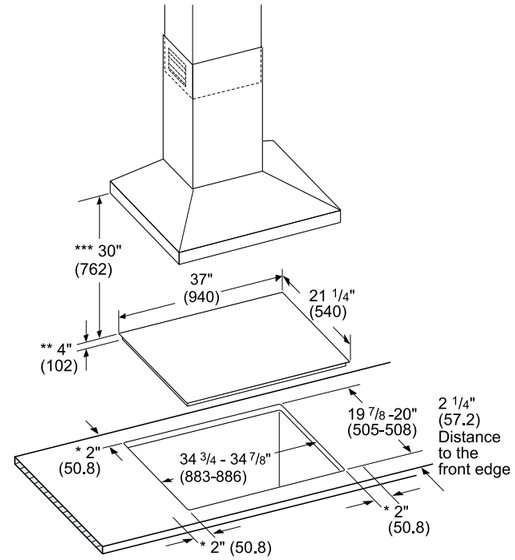

* Minimum distance from the cooktop cutout to the wall
** Maximum cutout depth
*** Minimum distance between the cooktop surface and lower edge of the exhaust hood.

Dimensions in inches (mm)

500 Series – Cooktop Electrical Location

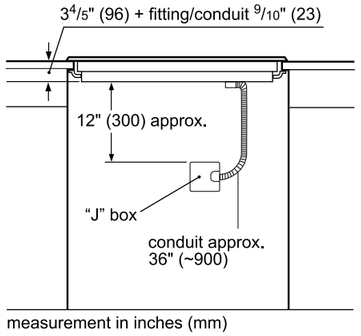

800 Series – Cooktop Electrical Location

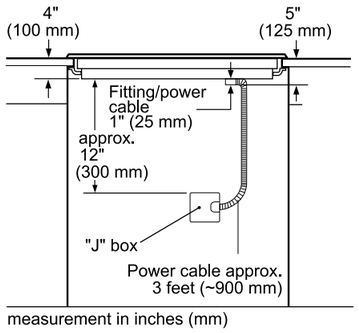

Cooktop Installation Above Wall Oven

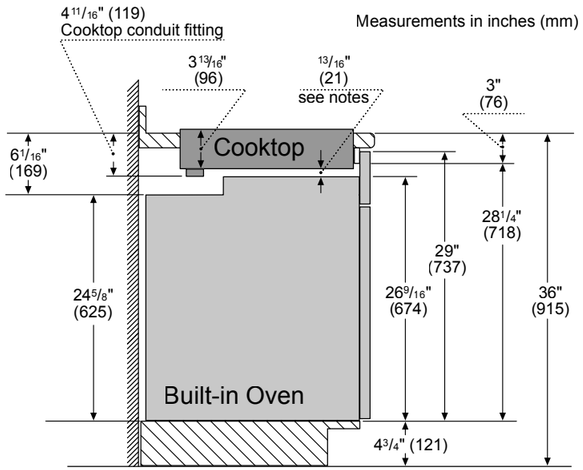

Dimensions based on standard countertop height (36" with 4 3/4" toe kick including base plate).

The built-in oven can be installed below the electric cooktop as long as there is no contact between the bottom of the cooktop and the top of the oven.

Built-in Wall Ovens

Bosch ovens are designed to beautifully enhance any kitchen. Whether cooking a quiche for two or preparing a roast for twelve, our ovens are engineered with innovative technologies that perform flawlessly, day in and day out. Bosch ovens let you cook with creativity and ease, with intuitive features like QuietClose® doors that never slam shut after a hectic day. Genuine European Convection provides even baking on all three racks. With an understated, built-in look that makes a timeless statement, the Bosch oven complements your taste in both cooking and design.

Benchmark® Series Built-in Wall Ovens

SideOpening door

Enjoy the intuitive ease of our left or right SideOpening door, available on Benchmark® Series wall ovens. It provides better ergonomic access to the oven cavity, allowing you to remove heavy dishes effortlessly.

Designed to integrate

Single wall ovens are designed to integrate seamlessly into your kitchen. Install flush, for a sleek, timeless look or proud for a more traditional look.

Easy, touch controls

Color TFT Control Panel with SteelTouch® buttons provides easy oven operation. The high-definition display features extra sharp images and easy-to-read text.

Steam convection

The Benchmark® Series steam convection oven prepares dishes that are tender on the inside and crisp on the outside. Steam cooking helps vegetables retain their intended color, nutrients and flavor.

Benchmark® Series Single Ovens

Standard Opening Door
HBLP451UC

SideOpening Left Swing Door
HBLP451LUC

SideOpening Right Swing Door
HBLP451RUC

30" Benchmark® Series Single Ovens

- Color TFT Control Panel
- Halogen Lights
- AutoProbe

	30" Benchmark® Series
	Standard Opening Stainless Steel – HBLP451UC SideOpening Left Swing Stainless Steel – HBLP451LUC SideOpening Right Swing Stainless Steel – HBLP451RUC
General Properties	
Cooking modes	Bake, Variable Broil (Hi & Low), Roast, Warm, Sabbath, Proof Dough, Convection Bake, Convection Broil, Convection Roast, Pizza, Multi Rack Genuine European Convection, Convection Conversion, AutoProbe, Fast Preheat, EcoChef, Speed Convection (Frozen Foods)
Cleaning type	Self clean
Telescopic rack	1
Illumination type	Halogen
Interior lights	2
Oven Performance	
Bake element wattages	2,400 W
Broil element wattages	3,800 W
Convection element wattages	2,000 W
Technical Details	
Watts (W)	6,325 W
Circuit breaker (A)	30 A
Volts (V)	240 / 208 V
Frequency (Hz)	60 Hz
Power cord length (in)	50"
Plug type	Fixed connection, no plug
Energy source	Electric
Dimensions & Weight	
Overall appliance dimensions (HxWxD) (in)	29" x 29 3/4" x 24 1/2"
Required cutout size (HxWxD) (in)	27" – 28 5/8" x 28 1/2" x 23 1/2"
Oven cavity size (cu. ft.)	4.6 cu. ft.
Overall oven interior dimensions (HxWxD) (in)	17 13/16" x 24 1/8" x 18"
Usable oven interior dimensions (HxWxD) (in)	12 5/16" x 23 1/4" x 15 1/4"
Net weight (lbs)	149 lbs
Accessories – Included	
Included	1 Telescopic and 2 standard oven racks, temperature probe, broiler pan

Optional Accessories

HEZTR301
30" Telescopic rack

Benchmark® Series Single Ovens

30" Single Wall Oven

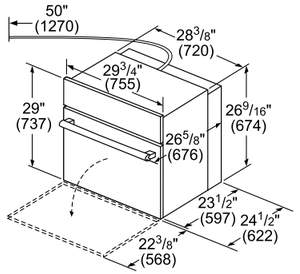

30" SideOpening Left Swing Door

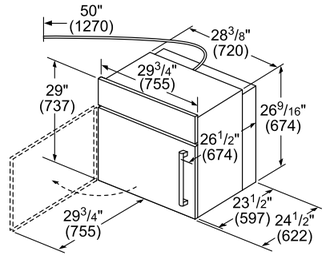

Allow 3/4" (19 mm) gap to nearest cabinet face for door swing on SideOpening models

30" SideOpening Right Swing Door

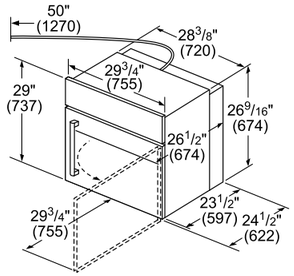

Allow 3/4" (19 mm) gap to nearest cabinet face for door swing on SideOpening models

Under-Counter Installation

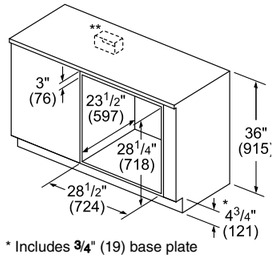

* Includes 3/4" (19) base plate

**For single ovens installed under a countertop, the junction box may be located to the left or right of the unit within reach of the power conduit.

Wall-Mounted Installation

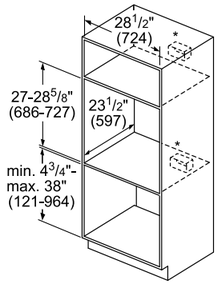

* For single ovens installed into a wall cabinet, the junction box may be located above or beneath the unit within reach of the power conduit.

measurements in inches (mm)

30" Single Wall Oven Flush Install

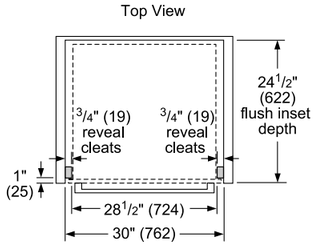

30" SideOpening Left Swing Door Flush Installation

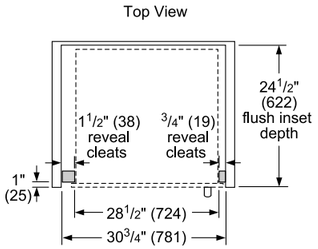

30" SideOpening Right Swing Door Flush Installation

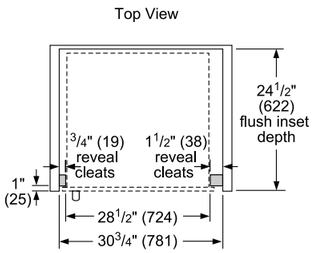

Single Wall Oven Flush Installation

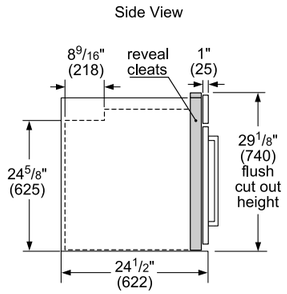

Measurements in inches (mm)

NOTE: Bosch single wall ovens can be installed in combination with other Bosch cooking products. See pages 67–69 for details.

500 Series 24" Single Ovens

24" 500 Series
HBE5451UC

- 2.8 cu. ft.
- Genuine European Convection
- Telescopic Extension Rail
- DualClean® System

24" 500 Series
HBE5452UC

- 2.5 cu. ft.
- Genuine European Convection
- +EcoClean® System
- +Ring Control with TFT Display
- +Home Connect™

+Indicates a step-up feature

	500 Series	500 Series
	24" Stainless Steel – HBE5451UC	24" Stainless Steel – HBE5452UC
General Properties		
Home Connect™ (Wi-Fi enabled)	N/A	Yes
Cooking modes	Bake, Broil Plus, Convection Bake, Convection Broil, Convection Broil Plus, Multi-Rack Genuine European Convection, Pie, Warm, Defrost, Frozen Foods	Convection Multi-Rack, Bake, Pizza, Roast, Proof, Convection Broil, Broil, Slow Cooking, Defrost, Plate Warming, Warming
Cleaning type	DualClean® System (uses the cavity coating and heat to burn off most grease)	EcoClean® Coating
Telescopic rack	1	N/A
Illumination type	Halogen	Halogen
Interior lights	2	1
Oven Performance		
Bake / broil element wattages	1,300 / 3,060 W	1,420 / 3,050 W
Convection element wattages	2,200 W	2,300 W
Technical Details		
Watts (W)	3,300 W	3,840 W
Circuit breaker (A)	20 A	20 A
Volts (V)	240 / 208 V	240 / 208 V
Frequency (Hz)	60 Hz	60 Hz
Power cord length (in)	47 1/4"	60"
Plug type	Fixed connection, no plug	Fixed connection, no plug
Energy source	Electric	Electric
Dimensions & Weight		
Overall appliance dimensions (HxWxD) (in)	23 5/16" x 23 1/2" x 22 1/2"	23 7/16" x 23 7/16" x 22 13/16"
Required cutout size – Standard (HxWxD) (in)	22 15/16" – 23 1/16" x 21 15/16" x 22 1/16"	23 1/16" x 22 1/8" x 23 1/2"
Required cutout size – Flush (HxWxD) (in)	23 9/16" x 23 3/4" x 22 15/16"	23 5/8" x 23 3/4" x 23 5/8"
Oven cavity size (cu. ft.)	2.8 cu. ft.	2.5 cu. ft.
Overall oven interior dimensions (HxWxD) (in)	15 1/16" x 18 3/16" x 17 11/16"	14 1/2" x 18 7/8" x 17 3/8"
Usable oven interior dimensions (HxWxD) (in)	11" x 17 1/4" x 16 1/4"	11 1/2" x 15 1/2" x 15 5/8"
Net weight (lbs)	87 lbs	83 lbs
Accessories – Included		
Included	1 standard rack, 1 telescopic extension rail, 1 enamel baking pan	3 standard oven racks

500 Series 24" Single Ovens

HBE5451UC Single Wall Oven

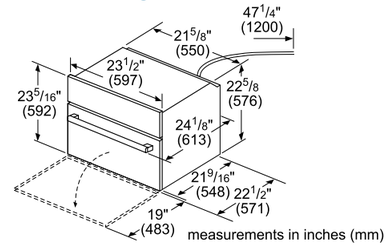

HBE5452UC Single Wall Oven

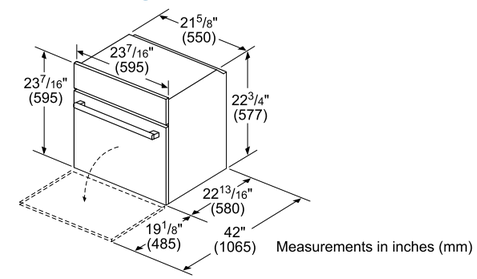

HBE5451UC Single Oven Under-Counter Installation

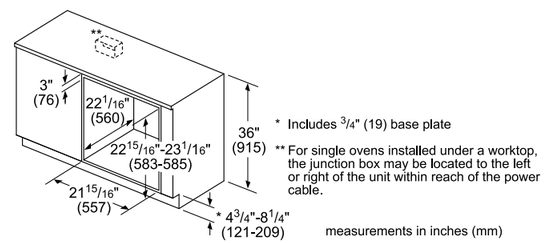

HBE5452UC Single Oven Under-Counter Installation

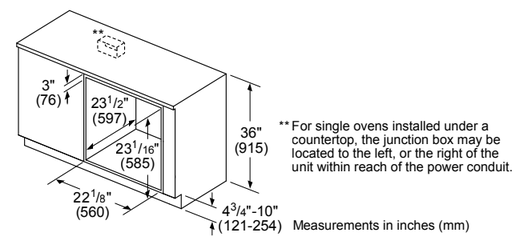

HBE5451UC Single Oven Wall-Mounted Installation

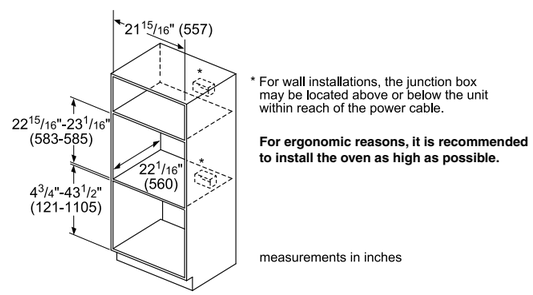

HBE5452UC Single Oven Wall-Mounted Installation

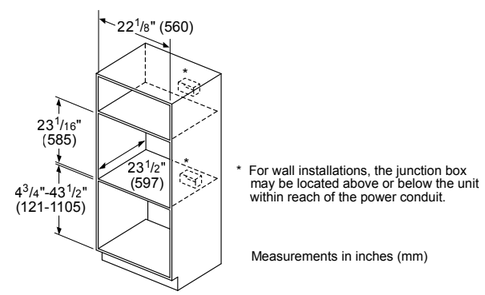

HBE5451UC Single Wall Oven Flush Installation

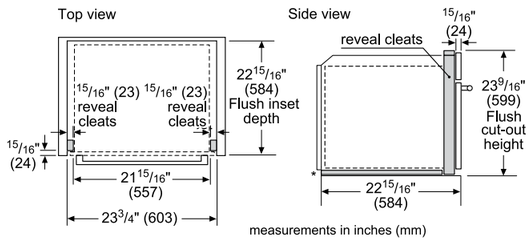

* Flush installation requires a 3/16" (5 mm) high x 21 15/16" (557 mm) wide x 22 1/16" (560 mm) deep baseplate underneath the unit body.

HBE5452UC Single Wall Oven Flush Installation

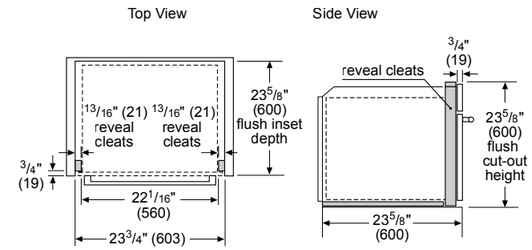

500 / 800 Series Single Ovens

30" 500 Series
HBL5351UC

- 4.6 cu. ft.
- Thermal Cooking
- Stainless Steel Knobs

27"

500 Series
30" HBL5451UC
27" HBN5451UC

- 4.6 cu. ft.
  (27" is 3.9 cu. ft.)
- + European Convection
- Stainless Steel Knobs

Black Stainless Steel

Black

27"

800 Series
30" HBL8451UC
30" HBL8442UC
30" HBL8461UC
27" HBN8451UC

- 4.6 cu. ft.
  (27" is 3.9 cu. ft.)
- + QuietClose® Door
- + Touch Control
- + Extension Rack
- + Meat Probe

+ Indicates a step-up feature

	500 Series	500 Series	800 Series
	30" Stainless Steel – HBL5351UC	30" Stainless Steel – HBL5451UC 27" Stainless Steel – HBN5451UC	30" Stainless Steel – HBL8451UC 30" Black Stainless Steel – HBL8442UC 30" Black – HBL8461UC 27" Stainless Steel – HBN8451UC
General Properties			
Cooking modes	Bake, Variable Broil (Hi & Low), Roast, Warm, Sabbath	Bake, Variable Broil (Hi & Low), Roast, Warm, Sabbath, Proof Dough, Convection Bake, Convection Broil, Convection Roast, Pizza, Multi Rack Genuine European Convection, Convection Conversion	Bake, Variable Broil (Hi & Low), Roast, Warm, Sabbath, Proof Dough, Convection Bake, Convection Broil, Convection Roast, Pizza, Multi Rack Genuine European Convection, Convection Conversion, Temperature Probe, Fast Preheat
Cleaning type	Self clean	Self clean	Self clean
Telescopic rack	0	0	1
Illumination type	Incandescent	Incandescent	Incandescent
Interior lights	1	30": 1; 27": 2	2
Oven Performance			
Bake / broil element wattages	2,400 / 3,800 W	2,400 / 3,800 W	2,400 / 3,800 W
Convection element wattages	N/A	2,000 W	2,000 W
Technical Details			
Watts (W)	6,275 W	6,325 W	6,325 W
Circuit breaker (A)	30 A	30 A	30 A
Volts (V)	240 / 208 V	240 / 208 V	240 / 208 V
Frequency (Hz)	60 Hz	60 Hz	60 Hz
Power cord length (in)	50"	50"	50"
Plug type	Fixed connection, no plug	Fixed connection, no plug	Fixed connection, no plug
Energy source	Electric	Electric	Electric
Dimensions & Weight			
Overall appliance dimensions (HxWxD) (in)	29" x 29 3/4" x 24 1/2"	30": 29" x 29 3/4" x 24 1/2" 27": 29" x 26 3/4" x 24 1/2"	30": 29" x 29 3/4" x 24 1/2" 27": 29" x 26 3/4" x 24 1/2"
Required cutout size (HxWxD) (in)	27" – 28 5/8" x 28 1/2" x 23 1/2"	30": 27" – 28 5/8" x 28 1/2" x 23 1/2" 27": 27" – 28 5/8" x 25 1/2" x 23 1/2"	30": 27" – 28 5/8" x 28 1/2" x 23 1/2" 27": 27" – 28 5/8" x 25 1/2" x 23 1/2"
Oven cavity size (cu. ft.)	4.6 cu. ft.	30": 4.6 cu. ft.; 27": 3.9 cu. ft.	30": 4.6 cu. ft.; 27": 3.9 cu. ft.
Overall oven interior dimensions (HxWxD) (in)	17 13/16" x 24 1/8" x 18"	30": 17 13/16" x 24 1/8" x 18" 27": 17 13/16" x 21 1/16" x 18"	30": 17 13/16" x 24 1/8" x 18" 27": 17 13/16" x 21 1/16" x 18"
Usable oven interior dimensions (HxWxD) (in)	12 5/16" x 23 1/4" x 15 1/4"	30": 12 5/16" x 23 1/4" x 15 1/4" 27": 12 5/16" x 20 1/4" x 15 1/4"	30": 12 5/16" x 23 1/4" x 15 1/4" 27": 12 5/16" x 20 1/4" x 15 1/4"
Net weight (lbs)	149 lbs	27": 127 lbs; 30": 149 lbs	27": 127 lbs; 30": 149 lbs
Accessories – Included			
Included	2 Standard oven racks	2 Standard oven racks	1 Telescopic and 2 standard oven racks, temperature probe

Optional Accessories for 30" Single Wall Ovens

HEZTR301
30" Telescopic rack

500 / 800 Series Single Ovens

30" Single Wall Oven

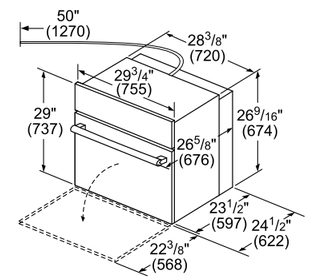

30" Single Oven Under-Counter Installation

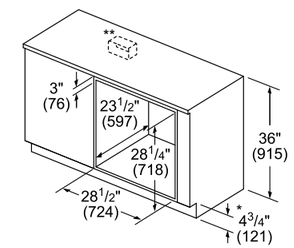

* Includes 3/4" (19) base plate

** For single ovens installed under a countertop, the junction box may be located to the left or right of the unit within reach of the power conduit.

30" Single Oven Wall-Mounted Installation

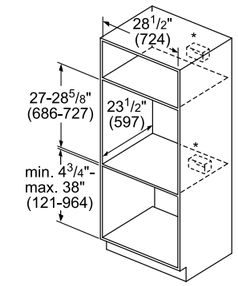

* For single ovens installed into a wall cabinet, the junction box may be located above or beneath the unit within reach of the power conduit.

measurements in inches (mm)

27" Single Wall Oven

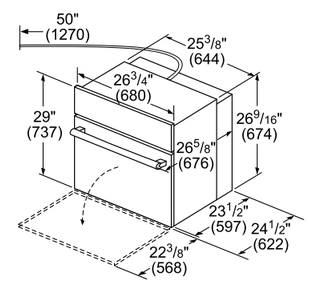

27" Single Oven Under-Counter Installation

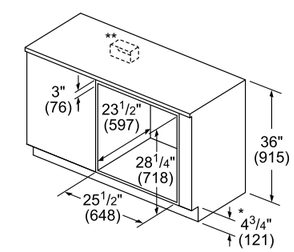

* Includes 3/4" (19) base plate

** For single ovens installed under a countertop, the junction box may be located to the left or right of the unit within reach of the power conduit.

27" Single Oven Wall-Mounted Installation

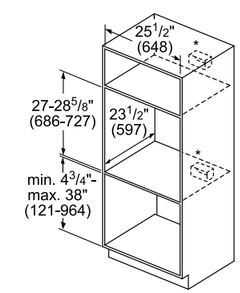

* For single ovens installed into a wall cabinet, the junction box may be located above or beneath the unit within reach of the power conduit.

measurements in inches (mm)

30" Single Wall Oven Flush Install

Top View

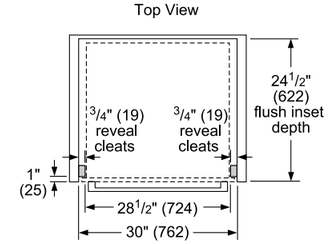

27" Single Wall Oven Flush Install

Top View

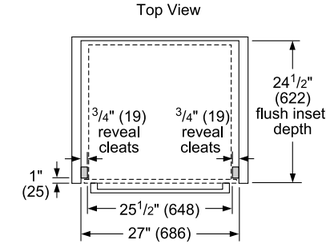

Single Wall Oven Flush Installation

Side View

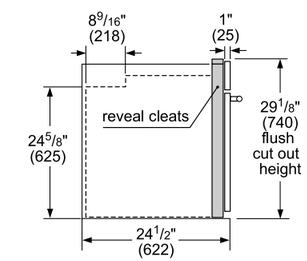

Measurements in inches (mm)

NOTE: Bosch single wall ovens can be installed in combination with other Bosch cooking products. See pages 72–73 for details. Horizontal installation of a 27" oven next to a 27" speed oven with warming drawer is possible, but the speed oven and warming drawer require either two or one cutout with a shelf support in between.

Benchmark® Series Steam Convection Oven

30" Benchmark® Series
Steam Convection
HSLP451UC

- 1.4 cu. ft.
- Color TFT Control Panel
- Halogen Lights
- Chicken and Vegetable Program
- No Trim Kit Needed

	30" Steam Convection
	Stainless Steel – HSLP451UC
General Properties	
Cooking modes	Steam, Steam Convection, European Convection, Reheat, Keep Warm, Defrost, Slow Cook, Proof, Dish Warming, 2 Chicken and 7 Vegetable Programs
Cleaning type	Steam clean
Illumination type	Halogen
Interior lights	1
Oven Performance	
Steam element wattage	1,960 W
Convection element wattages	1,960 W
Technical Details	
Watts (W)	1,960 W
Circuit breaker (A)	15 A
Volts (V)	240 / 208 V
Frequency (Hz)	60 Hz
Power cord length (in)	48"
Plug type	Fixed connection, no plug
Energy source	Electric
Installation Type	Non-plumbed
Dimensions & Weight	
Overall appliance dimensions (HxWxD) (in)	19 5/8" x 29 3/4" x 22 3/8"
Oven cavity size (cu. ft.)	1.4 cu. ft.
Required cutout size (HxWxD) (in)	19 1/4" x 28 1/2" x 23 1/2"
Net weight (lbs)	70 lbs
Accessories – Included	
Included	Wire rack, perforated cooking pan – full size, baking tray, perforated cooking pan – half size, cooking

Optional Accessories

HEZ36D453
Cooking pan – full size, 1 5/8" deep [not included with product]

HEZ36D452
Baking tray – full size, 1 1/8" deep

HEZ36D153G
Perforated cooking pan – half size, 1 5/8" deep

HEZ36D153
Cooking pan – half size, 1 5/8" deep

Benchmark® Series Steam Convection Oven

Product Dimensions

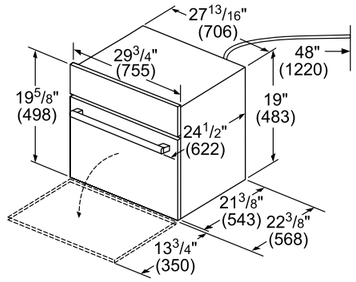

Under-Counter Installation

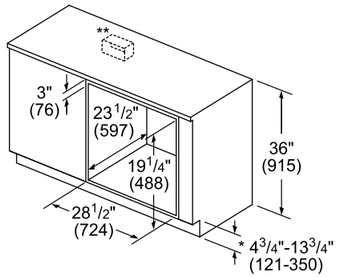

* Includes 3/4" (19) base plate

** Receptacle may be located to the left or right of the unit within reach of the power cord.

Wall Mounted Installation

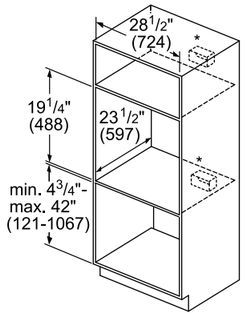

* Receptacle may be located above or beneath the unit within reach of the power cord.

measurements in inches (mm)

Flush Installation

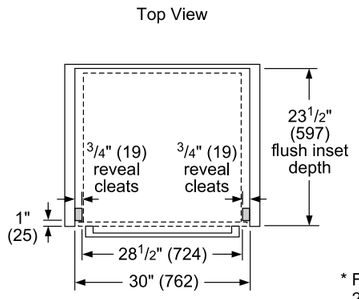

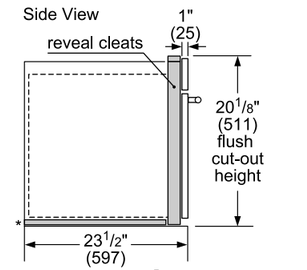

* Flush installation requires a 5/16" (8 mm) high x 28 1/2" (724 mm) wide x 22 1/2" (571 mm) deep baseplate underneath the unit body.

Measurements in inches (mm)

NOTE: Bosch steam convection oven can be installed in combination with other Bosch cooking products. See page 67 for details.

Benchmark® Series Speed & Steam Combination Ovens

30" Benchmark® Series
Speed Combination Oven
HBLP752UC

- 240V Speed Oven (U)
- Color TFT Control Panel (U&L)
- Halogen Lights (U&L)
- AutoProbe (L)

30" Benchmark® Series
Steam Convection Combination Oven
HSLP751UC

- Steam Convection Oven (U)
- Color TFT Control Panel (L)
- Halogen Lights (U&L)
- AutoProbe (L)

U=Upper; L=Lower

	30" Speed Combination	30" Steam Convection Combination
	Stainless Steel – HBLP752UC	Stainless Steel – HSLP751UC
General Properties		
Cooking modes – upper cavity	Microwave; 12 Auto Programs (Including Auto Defrost, Melt Butter, Soften Ice Cream, Pizza), 9 Sensor Cook Programs, 9 AutoChef® Speed Programs, Hi & Lo Broil, European Convection, Keep Warm, Frozen Foods	Steam, Steam Convection, European Convection, Reheat, Keep Warm, Defrost, Slow Cook, Proof, Dish Warming, 2 Chicken and 7 Vegetable Programs
Cooking modes – lower cavity	Bake, Variable Broil (Hi & Low), Roast, Warm, Sabbath, Proof Dough, Convection Bake, Convection Broil, Convection Roast, Pizza, Multi Rack Genuine European Convection, Convection Conversion, AutoProbe, Fast Preheat, EcoChef, Speed Convection (Frozen Foods)	Bake, Variable Broil (Hi & Low), Roast, Warm, Sabbath, Proof Dough, Convection Bake, Convection Broil, Convection Roast, Pizza, Multi Rack Genuine European Convection, Convection Conversion, AutoProbe, Fast Preheat, EcoChef, Speed Convection (Frozen Foods)
Cleaning type – lower cavity	Self clean	Self clean
Telescopic rack	1	1
Illumination type	Halogen (upper and lower)	Halogen (upper and lower)
Interior lights – upper / lower cavity	1 / 2	1 / 2
Oven Performance		
Microwave power – upper cavity	1000 W	N/A
Bake / broil element wattages – upper cavity	600 / 1,750 W	1,960 W*
Bake / broil element wattages – lower cavity	2,400 / 3,800 W	2,400 / 3,800 W
Convection element wattages – upper cavity / lower cavity	1,700 W / 2,000 W	1,960 W / 2,000 W
Technical Details		
Watts (W)	9,725 W	8,325 W
Circuit breaker (A)	40 A	40 A
Volts (V); Frequency (Hz)	240 / 208 V; 60 Hz	240 / 208 V; 60 Hz
Power cord length (in)	50"	50"
Plug type	Fixed connection, no plug	Fixed connection, no plug
Energy source	Electric	Electric
Installation type	N/A	Non-plumbed
Dimensions & Weight		
Overall appliance dimensions (HxWxD)(in)	49" x 29 3/4" x 24 1/2"	49" x 29 3/4" x 24 1/2"
Required cutout size (HxWxD) (in)	48 5/8" x 28 1/2" x 23 1/2"	48 5/8" x 28 1/2" x 23 1/2"
Oven cavity size (cu. ft.)	4.6 cu. ft.	4.6 cu. ft.
Overall lower oven interior dimensions (HxWxD) (in)	17 13/16" x 24 1/8" x 18"	17 13/16" x 24 1/8" x 18"
Usable lower oven interior dimensions (HxWxD) (in)	12 5/16" x 23 1/4" x 15 1/4"	12 5/16" x 23 1/4" x 15 1/4"
Net weight (lbs)	259 lbs	219 lbs
Accessories – Included		
Included	Upper oven: metal turntable, square rack, ceramic cooking tray; Lower oven: 1 telescopic and 2 standard oven racks, temperature probe, broiler pan	Upper oven: wire rack, perforated cooking pan – full size, baking tray, perforated cooking pan – half size, cooking pan – half size; Lower oven: 1 telescopic and 2 standard oven racks, temperature probe, broiler pan

*Element below water reservoir that generates steam

Benchmark® Series Speed & Steam Combination Ovens

Product Dimensions

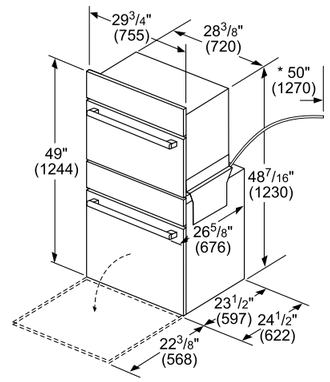

* Power cable 50" (1270 mm) from the lower oven.

Cutout Dimensions

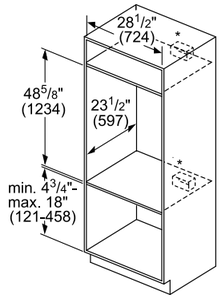

* Junction box may be installed above, below, or to the left or right of the unit within reach of the power cable

measurements in inches (mm)

Flush Installation

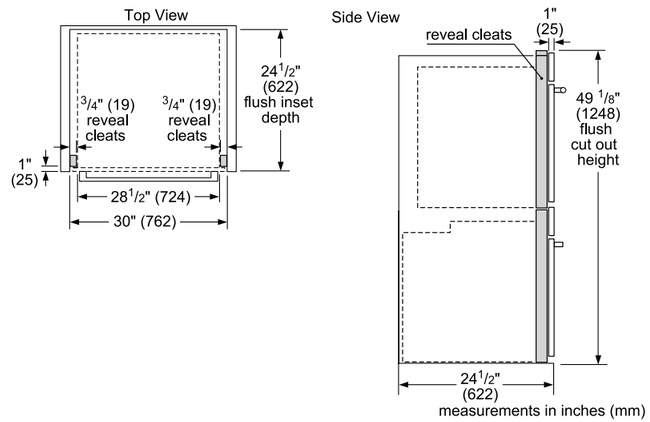

measurements in inches (mm)

NOTE: Bosch combination wall ovens can be installed in combination with other Bosch cooking products. See page 71 for details.

Optional Accessories for Speed Combination Oven

HEZTR301
30" Telescopic rack

Optional Accessories for Steam Convection Combination Oven

HEZ36D453
Cooking pan – full size, 1 5/8" deep [not included with product]

HEZ36D452
Baking tray – full size, 1 1/8" deep

HEZ36D153G
Perforated cooking pan – half size, 1 5/8" deep

HEZ36D153
Cooking pan – half size, 1 5/8" deep

500 / 800 Series Combination Ovens

30" 500 Series
HBL57M52UC

- 120V Microwave Oven (U)
- 4.6 cu. ft. (L)
- European Convection (L)
- Stainless Steel Knobs (L)

30" 800 Series
HBL87M52UC

- 120V Microwave Oven (U)
- 4.6 cu. ft. (L)
- + QuietClose® Door (L)
- + Extension Rack (L)
- + Meat Probe (L)

30" 800 Series
HBL8752UC
HBL8742UC

- 240V Speed Oven (U)
- 4.6 cu. ft. (L)
- + 12 Auto Programs (U)
- + 1000 W Microwave (U)
- + Halogen Lights (U&L)

Black
Stainless Steel

+ Indicates a step-up feature
U=Upper; L=Lower

	500 Series	800 Series	800 Series
	Stainless Steel – HBL57M52UC	Stainless Steel – HBL87M52UC	Stainless Steel – HBL8752UC Black Stainless Steel – HBL8742UC
General Properties			
Cooking modes – upper cavity	Microwave; 10 Sensor Cooking Programs (Including Baked Potato, Sweet Potato, Fresh Vegetable, Frozen Vegetable, Ground Meat, Fish/Seafood, Brown Rice, White Rice, Frozen Entrées, Reheat), Popcorn, Beverage, Melt/Soften, Defrost	Microwave; 10 Sensor Cooking Programs (Including Baked Potato, Sweet Potato, Fresh Vegetable, Frozen Vegetable, Ground Meat, Fish/Seafood, Brown Rice, White Rice, Frozen Entrées, Reheat), Popcorn, Beverage, Melt/Soften, Defrost	Speed Oven; 12 Auto Programs (Including Auto Defrost, Melt Butter, Soften Ice Cream, Pizza), 9 Sensor Cook Programs, 9 SpeedChef® Programs, Hi & Lo Broil, European Convection, Keep Warm, Frozen Foods
Cooking modes – lower cavity	Bake, Variable Broil (Hi & Low), Roast, Warm, Sabbath, Proof Dough, Convection Bake, Convection Broil, Convection Roast, Pizza, Multi Rack Genuine European Convection, Convection Conversion	Bake, Variable Broil (Hi & Low), Roast, Warm, Sabbath, Proof Dough, Convection Bake, Convection Broil, Convection Roast, Pizza, Multi Rack Genuine European Convection, Convection Conversion, Temperature Probe, Fast Preheat	Bake, Variable Broil (Hi & Low), Roast, Warm, Sabbath, Proof Dough, Convection Bake, Convection Broil, Convection Roast, Pizza, Multi Rack Genuine European Convection, Convection Conversion, Temperature Probe, Fast Preheat
Cleaning type – lower cavity	Self clean	Self clean	Self clean
Telescopic rack	0	1	1
Illumination type	Incandescent (upper and lower)	Incandescent (upper and lower)	Halogen (upper and lower)
Interior lights – upper / lower cavity	1 / 1	1 / 2	1 / 2
Oven Performance			
Microwave power – upper cavity	950 W	950 W	1000 W
Bake / broil element wattages – upper	N/A	N/A	600 / 1,750 W
Convection element wattages – upper	N/A	N/A	1,700 W
Bake / broil element wattages – lower	2,400 / 3,800 W	2,400 / 3,800 W	2,400 / 3,800 W
Convection element wattages – lower	2,000 W	2,000 W	2,000 W
Technical Details			
Watts (W)	9,600 W	9,600 W	9,600 W
Circuit breaker (A)	40 A	40 A	40 A
Volts (V); Frequency (Hz)	240 / 208 V; 60 Hz	240 / 208 V; 60 Hz	240 / 208 V; 60 Hz
Power cord length (in)	50"	50"	50"
Plug type	Fixed connection, no plug	Fixed connection, no plug	Fixed connection, no plug
Energy source	Electric	Electric	Electric
Dimensions & Weight			
Overall appliance dimensions (HxWxD) (in)	49" x 29 3/4" x 24 1/2"	49" x 29 3/4" x 24 1/2"	49" x 29 3/4" x 24 1/2"
Required cutout size(HxWxD) (in)	48 5/8" x 28 1/2" x 23 1/2"	48 5/8" x 28 1/2" x 23 1/2"	48 5/8" x 28 1/2" x 23 1/2"
Overall upper oven interior dimensions (HxWxD) (in.)	9 7/8" x 16 1/2" x 16 1/2"	9 7/8" x 16 1/2" x 16 1/2"	9 7/8" x 16 1/2" x 16 1/2"
Turntable – glass max. cookware	14 1/8" dia.	14 1/8" dia.	N/A
Turntable – metal max. cookware	N/A	N/A	12 3/4" dia.
Turntable – ceramic max. cookware	N/A	N/A	12 1/2" dia.
Rack – rectangular cookware max.	N/A	N/A	15" x 12"
Oven cavity size – lower cavity (cu. ft.)	4.6 cu. ft.	4.6 cu. ft.	4.6 cu. ft.
Overall lower oven interior dimensions (HxWxD) (in)	17 13/16" x 24 1/8" x 18"	17 13/16" x 24 1/8" x 18"	17 13/16" x 24 1/8" x 18"
Usable lower oven interior dimensions (HxWxD) (in)	12 5/16" x 23 1/4" x 15 1/4"	12 5/16" x 23 1/4" x 15 1/4"	12 5/16" x 23 1/4" x 15 1/4"
Net weight (lbs)	259 lbs	259 lbs	259 lbs

500 / 800 Series Combination Ovens

Product Dimensions

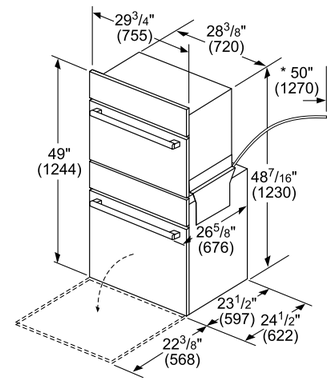

* Power cable 50" (1270 mm) from the lower oven.

Cutout Dimensions

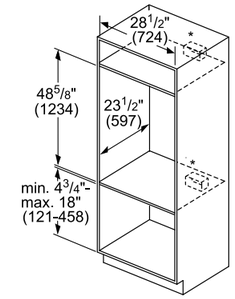

* Junction box may be installed above, below, or to the left or right of the unit within reach of the power cable

measurements in inches (mm)

Flush Installation

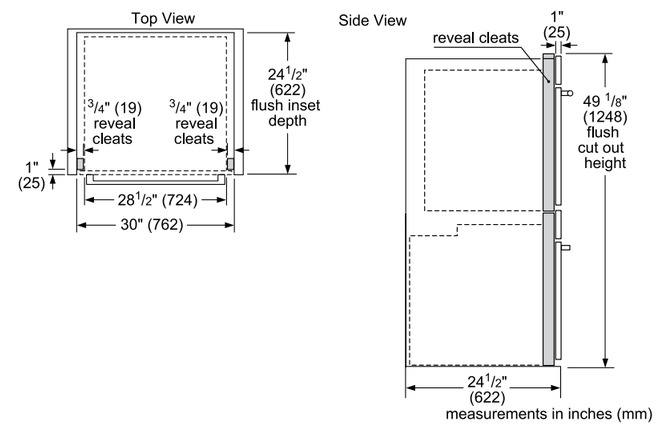

NOTE: Bosch combination wall ovens can be installed in combination with other Bosch cooking products. See page 75 for details.

Accessories – Included	500 Series	800 Series
Included	Upper oven: metal turntable, square rack, ceramic cooking tray; Lower oven: 2 standard oven racks	Upper oven: metal turntable, square rack, ceramic cooking tray; Lower oven: 1 telescopic and 2 standard oven racks, meat probe

Optional Accessories

HEZTR301
30" Telescopic rack

Benchmark® Series Double Ovens

Standard Opening Door
HBLP651UC

SideOpening Left Swing Door
HBLP651LUC

SideOpening Right Swing Door
HBLP651RUC

30" Benchmark® Series Double Ovens

- European Convection (U&L)
- Color TFT Control Panel (U)
- Halogen Lights (U&L)
- AutoProbe (U)

U=Upper; L=Lower

	30" Benchmark® Series
	Standard Opening Stainless Steel – HBLP651UC SideOpening Left Swing Stainless Steel – HBLP651LUC SideOpening Right Swing Stainless Steel – HBLP651RUC
General Properties	
Cooking modes – upper cavity	Bake, Variable Broil (Hi & Low), Roast, Warm, Sabbath, Proof Dough, Convection Bake, Convection Broil, Convection Roast, Pizza, Multi Rack Genuine European Convection, Convection Conversion, AutoProbe, Fast Preheat, EcoChef, Speed Convection (Frozen Foods)
Cooking modes – lower cavity	Identical to upper cavity (exception: lower cavity does not feature temperature probe and EcoChef)
Cleaning type – upper cavity	Self clean
Cleaning type – lower cavity	Self clean
Telescopic rack	1
Illumination type – upper / lower cavity	Halogen
Interior lights – upper cavity	2
Interior lights – lower cavity	2
Oven Performance	
Bake / broil element wattages – upper cavity	2,400 / 3,800 W
Convection element wattages – upper cavity	2,000 W
Bake / broil element wattages – lower cavity	2,400 / 3,800 W
Convection element wattages – lower cavity	2,000 W
Technical Details	
Watts (W)	9,125 W
Circuit breaker (A)	40 A
Volts (V)	240 / 208 V
Frequency (Hz)	60 Hz
Power cord length (in)	50"
Plug type	Fixed connection, no plug
Energy source	Electric
Dimensions & Weight	
Overall appliance dimensions (HxWxD) (in)	52 1/16" x 29 3/4" x 24 1/2"
Required cutout size (HxWxD) (in)	49 3/4" – 51 1/2" x 28 1/2" x 23 1/2"
Oven cavity size – lower cavity (cu. ft.)	4.6 cu. ft.
Overall oven interior dimensions (HxWxD) (in)	17 13/16" x 24 1/8" x 18"
Usable oven interior dimensions (HxWxD) (in)	12 5/16" x 23 1/4" x 15 1/4"
Net weight (lbs)	261 lbs
Accessories – Included	
Included	Upper oven: 1 telescopic and 2 standard oven racks, temperature probe, broiler pan; Lower oven: 3 standard oven racks

Optional Accessories

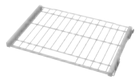

HEZTR301
30" Telescopic rack

Benchmark® Series Double Ovens

30" Double Wall Oven

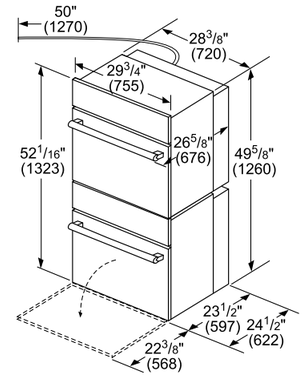

30" SideOpening Left Swing Door

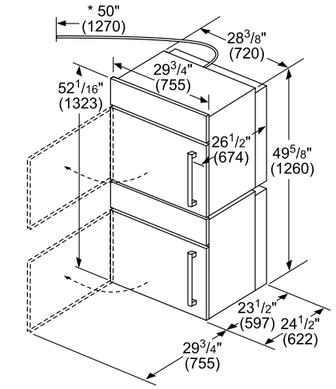

** Allow 3/4" (19 mm) gap to nearest cabinet face for door swing on SideOpening models

30" SideOpening Right Swing Door

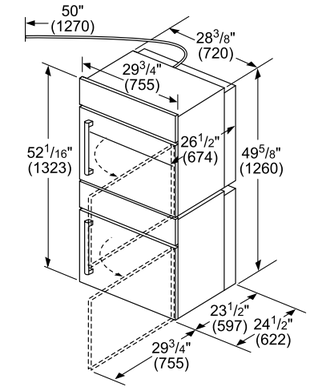

** Allow 3/4" (19 mm) gap to nearest cabinet face for door swing on SideOpening models

All 30" Double Wall Ovens

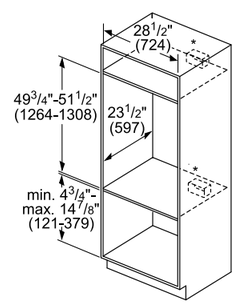

* Junction box may be installed above, below, or to the left or right of the unit within range of the power conduit.

measurements in inches (mm)

30" SideOpening Left Swing Door Flush Installation

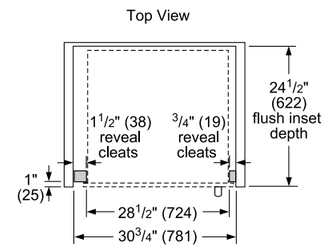

30" SideOpening Right Swing Door Flush Installation

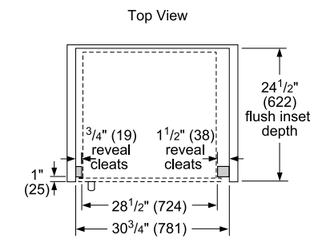

30" Double Wall Oven Flush Installation

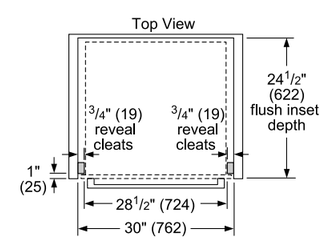

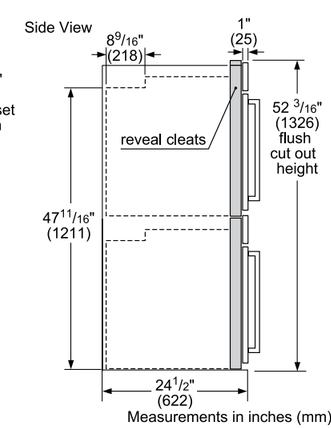

NOTE: Bosch double wall ovens can be installed in combination with other Bosch cooking products. See page 70 for details.

500 / 800 Series Double Ovens

30" 500 Series
HBL5551UC

- 4.6 cu. ft.
- Thermal Cooking (U&L)
- Stainless Steel Knobs

500 Series
30" HBL5651UC
27" HBN5651UC

- 4.6 cu. ft. (27" is 3.9 cu. ft.)
- + European Convection (U), Thermal Cooking (L)

27"

800 Series
30" HBL8651UC
30" HBL8642UC
30" HBL8661UC
27" HBN8651UC

- 4.6 cu. ft. (27" is 3.9 cu. ft.)
- European Convection (U), Thermal Cooking (L)
- + QuietClose® Door (U&L)
- + Extension Rack (U)
- + Meat Probe (U)

Black Stainless Steel | Black | 27"

+ Indicates a step-up feature
U=Upper; L=Lower

	500 Series	500 Series	800 Series
	30" Stainless Steel – HBL5551UC	30" Stainless Steel – HBL5651UC 27" Stainless Steel – HBN5651UC	30" Stainless Steel – HBL8651UC 30" Black Stainless Steel – HBL8642UC 30" Black – HBL8661UC 27" Stainless Steel – HBN8651UC
General Properties			
Cooking modes – upper cavity	Bake, Variable Broil (Hi & Low), Roast, Warm, Sabbath	Bake, Variable Broil (Hi & Low), Roast, Warm, Sabbath, Proof Dough, Convection Bake, Convection Broil, Convection Roast, Pizza, Multi Rack Genuine European Convection, Convection Conversion	Bake, Variable Broil (Hi & Low), Roast, Warm, Sabbath, Proof Dough, Convection Bake, Convection Broil, Convection Roast, Pizza, Multi Rack Genuine European Convection, Convection Conversion, Temperature Probe, Fast Preheat
Cooking modes – lower cavity	Bake, Variable Broil (Hi & Low), Roast, Warm, Sabbath	Bake, Variable Broil (Hi & Low), Roast, Warm, Sabbath	Bake, Variable Broil (Hi & Low), Roast, Warm, Sabbath
Cleaning type – upper & lower cavity	Self clean	Self clean	Self clean
Telescopic rack	0	0	1
Illumination type – upper & lower cavity	Incandescent	Incandescent	Incandescent
Interior lights – upper cavity	1	30": 1; 27": 2	2
Interior lights – lower cavity	1	30": 1; 27": 2	30": 1; 27": 2
Oven Performance			
Bake / Broil element wattages – upper & lower cavity	2,400 / 3,800 W	2,400 / 3,800 W	2,400 / 3,800 W
Convection element wattages – upper cavity	N/A	2,000 W	2,000 W
Technical Details			
Watts (W)	7,805 W	30": 8,455 W; 27": 8,535 W	30": 8,495 W; 27": 8,535 W
Volts (V), Frequency (Hz), Circuit breaker (A)	240 / 208 V, 60 Hz, 40 A	240 / 208 V, 60 Hz, 40 A	240 / 208 V, 60 Hz, 40 A
Power cord length (in); Plug type	50"; Fixed connection, no plug	50"; Fixed connection, no plug	50"; Fixed connection, no plug
Energy source	Electric	Electric	Electric
Dimensions & Weight			
Overall appliance dimensions (HxWxD) (in)	52 1/16" x 29 3/4" x 24 1/2"	30": 52 1/16" x 29 3/4" x 24 1/2" 27": 52 1/16" x 26 3/4" x 24 1/2"	30": 52 1/16" x 29 3/4" x 24 1/2" 27": 52 1/16" x 26 3/4" x 24 1/2"
Required cutout size (HxWxD) (in)	49 3/4" – 51 1/2" x 28 1/2" x 23 1/2"	30": 49 3/4"–51 1/2" x 28 1/2" x 23 1/2" 27": 49 3/4"–51 1/2" x 25 1/2" x 23 1/2"	30": 49 3/4"–51 1/2" x 28 1/2" x 23 1/2" 27": 49 3/4"–51 1/2" x 25 1/2" x 23 1/2"
Oven cavity size (cu. ft.)	4.6 cu. ft.	30": 4.6 cu. ft.; 27": 3.9 cu. ft.	30": 4.6 cu. ft.; 27": 3.9 cu. ft.
Overall oven interior dimensions (HxWxD) (in)	17 13/16" x 24 1/8" x 18"	30": 17 13/16" x 24 1/8" x 18" 27": 17 13/16" x 21 1/16" x 18"	30": 17 13/16" x 24 1/8" x 18" 27": 17 13/16" x 21 1/16" x 18"
Usable oven interior dimensions (HxWxD) (in)	12 5/16" x 23 1/4" x 15 1/4"	30": 12 5/16" x 23 1/4" x 15 1/4" 27": 12 5/16" x 20 1/4" x 15 1/4"	30": 12 5/16" x 23 1/4" x 15 1/4" 27": 12 5/16" x 20 1/4" x 15 1/4"
Net weight (lbs)	261 lbs	30": 261 lbs; 27": 243 lbs	30": 261 lbs; 27": 243 lbs
Accessories – Included			
	Upper oven: 2 standard oven racks Lower oven: 2 standard oven racks	Upper oven: 2 standard oven racks Lower oven: 2 standard oven racks	Upper oven: 1 telescopic and 2 standard oven racks, temperature probe; Lower oven: 2 standard oven racks

500 / 800 Series Double Ovens

30" Double Wall Oven

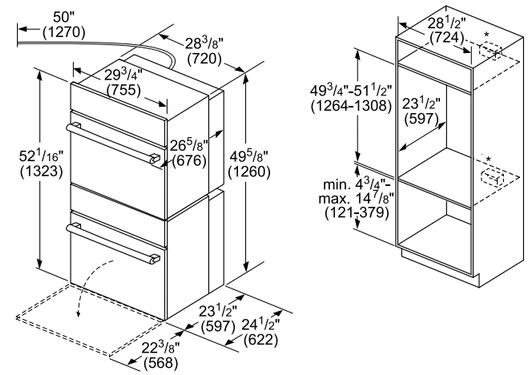

* Junction box may be installed above, below, or to the left or right of the unit within range of the power conduit.

measurements in inches (mm)

27" Double Wall Oven

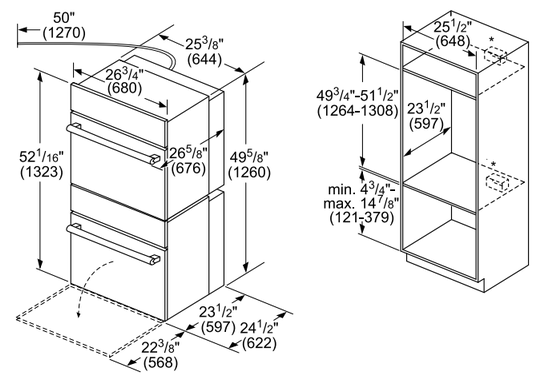

* Junction box may be installed above, below, or to the left or right of the unit within range of the power conduit.

measurements in inches (mm)

30" Double Wall Oven Flush Install

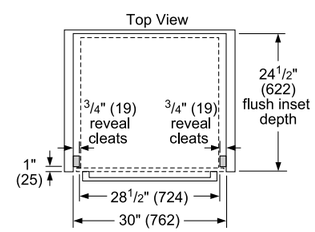

27" Single Wall Oven Flush Install

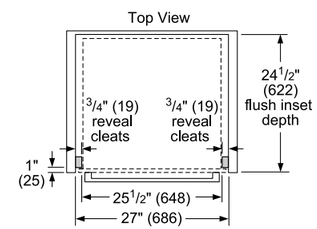

Double Wall Oven Flush Installation

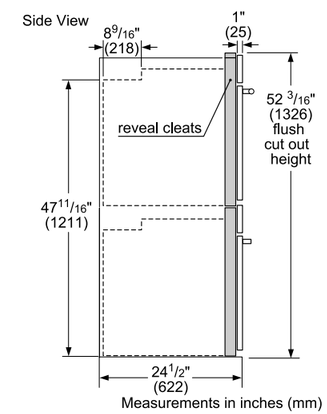

Measurements in inches (mm)

NOTE: Bosch double wall ovens can be installed in combination with other Bosch cooking products. See page 74 for details.

Optional Accessories for 30" Double Wall Ovens

HEZTR301
30" Telescopic Rack

Guide to Installing Bosch Wall Ovens with Other Products

Benchmark® Series Steam Convection Oven

Installed in combination with other products.

Standard Installation
30" Steam Convection Oven over Storage or Warming Drawer

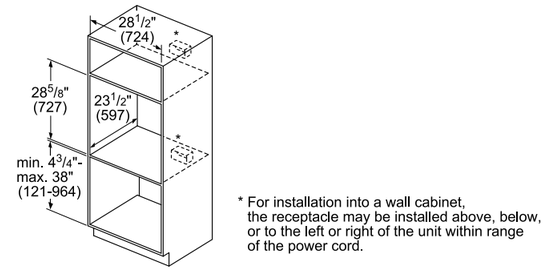

* For installation into a wall cabinet, the receptacle may be installed above, below, or to the left or right of the unit within range of the power cord.

Flush Installation
Steam Convection Oven over Storage or Warming Drawer

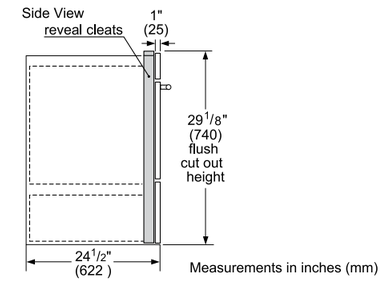

Standard Installation
30" Steam Convection Oven over Single Oven***

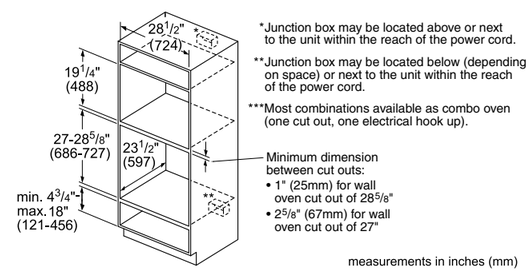

NOTE: This configuration is available as a combo oven (one cut out, one electrical hook up) – HSLP751UC

Flush Installation
Steam Convection Oven over Single Oven**

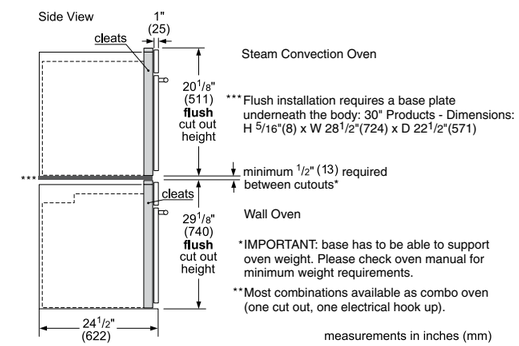

NOTE: This configuration available as a combo oven. See Note at left for details.

Benchmark® Series Single Wall Ovens

Installed in combination with other products.

Standard Installation
30" Single Oven over Storage or Warming Drawer

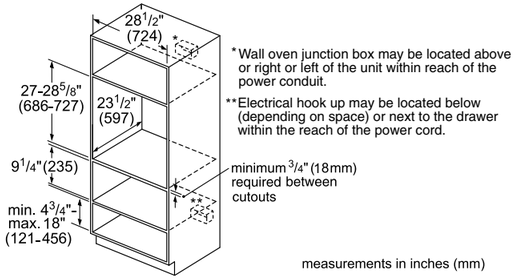

Flush Installation
Single Oven over Storage or Warming Drawer

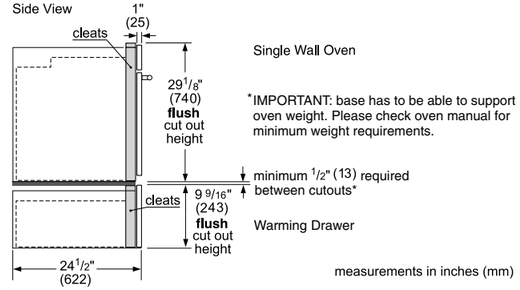

Standard Installation
30" Speed Oven or Microwave over Single Oven***

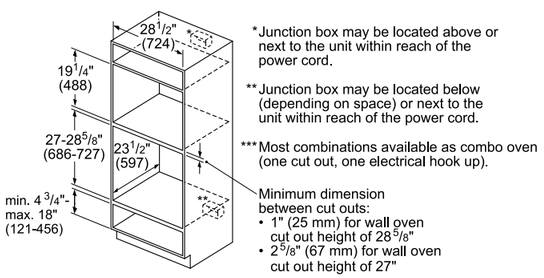

Flush Installation
Speed Oven or Microwave over 30" Single Oven**

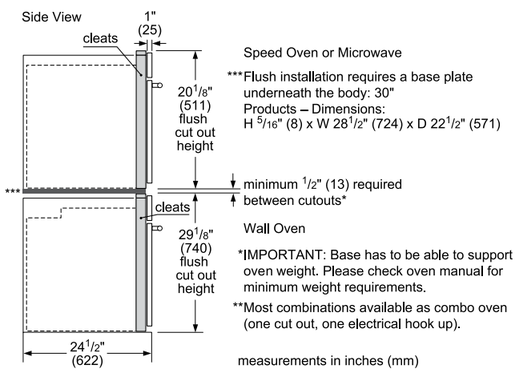

Benchmark® Series Single Wall Ovens SideOpening Door

Installed in combination with other products.

Standard Installation
30" Single Oven over Storage or Warming Drawer

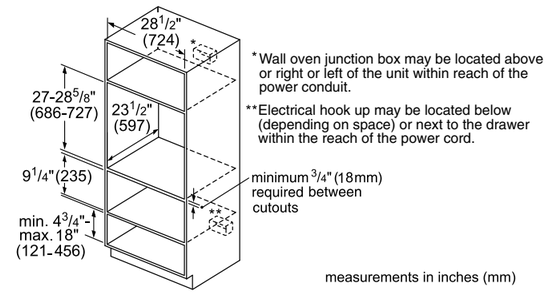

Flush Installation
Single Oven over Storage or Warming Drawer

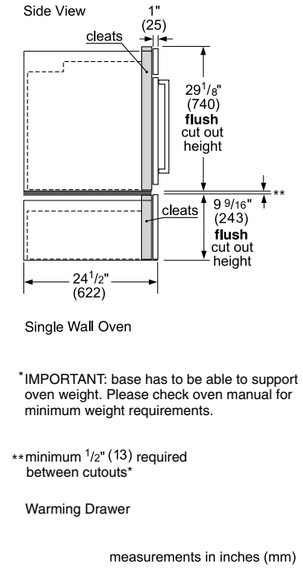

Standard Installation
30" Speed Oven or Microwave over Single Oven***

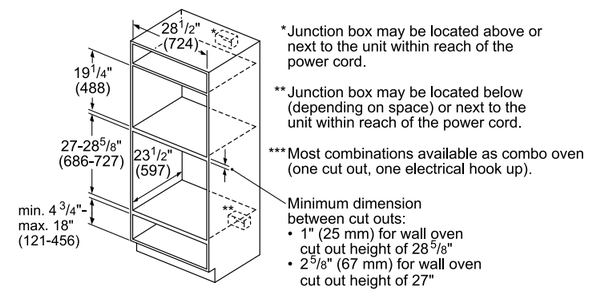

Flush Installation
Speed Oven or Microwave over 30" Single Oven**

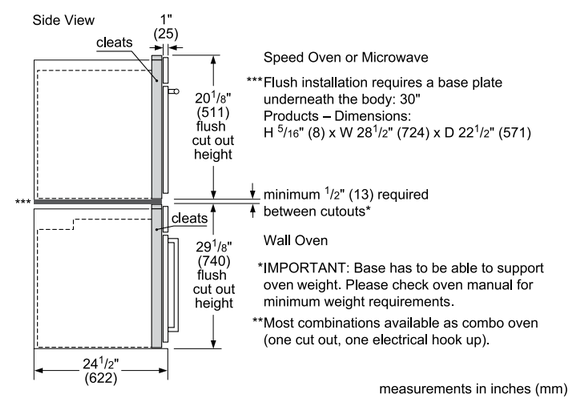

Benchmark® Series Double Wall Ovens

Installed in combination with other products.

Standard Installation
30" Double Oven over Storage or Warming Drawer

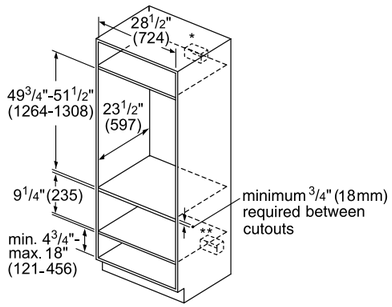

measurements in inches (mm)

*Wall oven junction box may be located above or right or left of the unit within reach of the power conduit.

**Electrical hook up may be located below (depending on space) or next to the drawer within the reach of the power cord.

Flush Installation
Double Oven over Storage or Warming Drawer

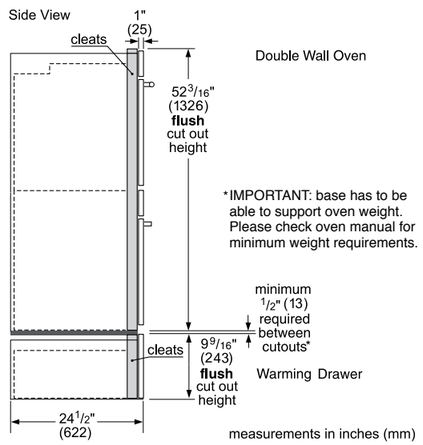

measurements in inches (mm)

Benchmark® Series Double Wall Ovens SideOpening Door

Installed in combination with other products.

Standard Installation
30" Double Oven over Storage or Warming Drawer

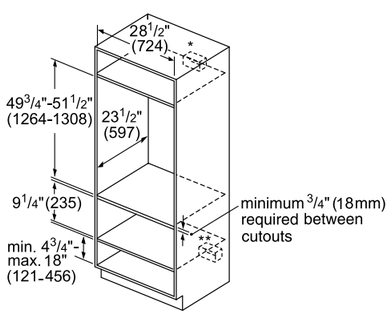

measurements in inches (mm)

*Wall oven junction box may be located above or right or left of the unit within reach of the power conduit.

**Electrical hook up may be located below (depending on space) or next to the drawer within the reach of the power cord.

Flush Installation
Double Oven over Storage or Warming Drawer

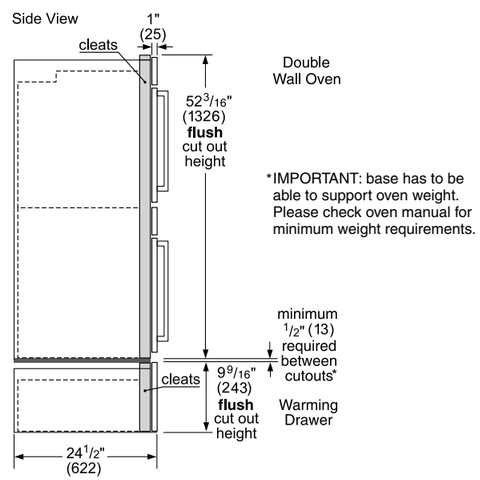

measurements in inches (mm)

Benchmark® Series Combination Ovens

Installed in combination with other products.

Standard Installation
Combination Oven over Storage or Warming Drawer

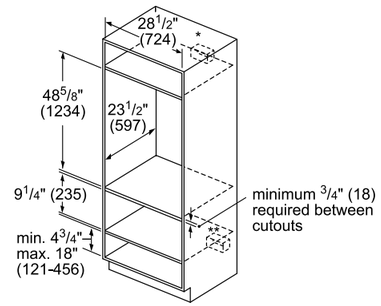

*Wall oven junction box may be located above or right or left of the unit within reach of the power conduit.

**Electrical hook up may be located below (depending on space) or next to the drawer within the reach of the power cord.

Measurements in inches (mm)

Flush Installation
Combination Oven over Storage or Warming Drawer

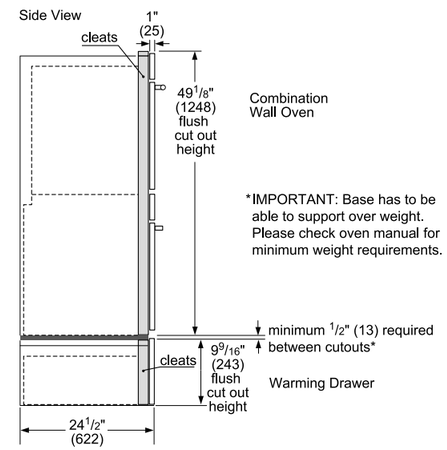

Measurements in inches (mm)

500 / 800 Series 30" Single Wall Ovens

Installed in combination with other products.

Standard Installation
30" Single Oven over Storage or Warming Drawer

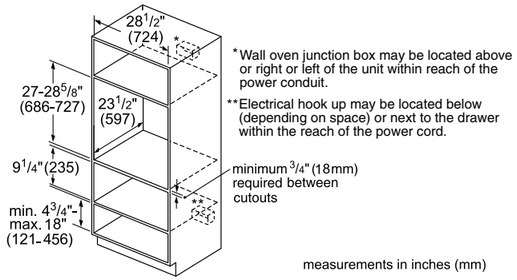

Flush Installation
Single Oven over Storage or Warming Drawer

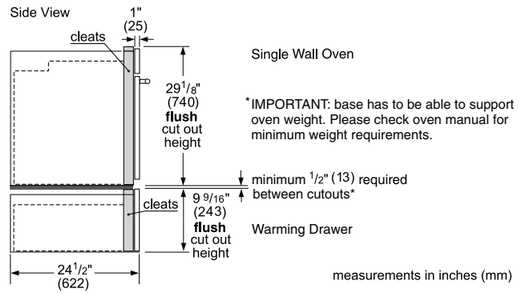

Standard Installation
30" Speed Oven or Microwave over Single Oven***

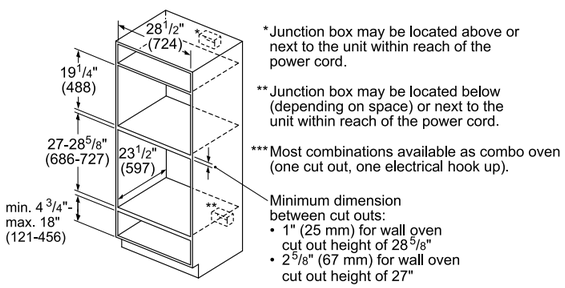

NOTE: This configuration is available as a combo oven (one cut out, one electrical hook up) – HBL57M52UC (500 series), HBL8752UC (800 series) and HBL87M52UC (800 series)

Flush Installation
Speed Oven or Microwave over 30" Single Oven**

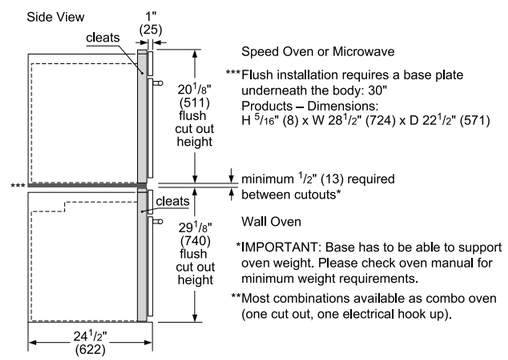

NOTE: This configuration available as a combo oven.
See Note at left for details.

500 / 800 Series 27" Single Wall Ovens

Installed in combination with other products.

Standard Installation
27" Single Oven over Warming Drawer

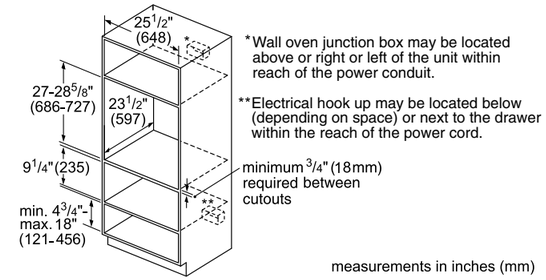

Flush Installation
Single Oven over Warming Drawer

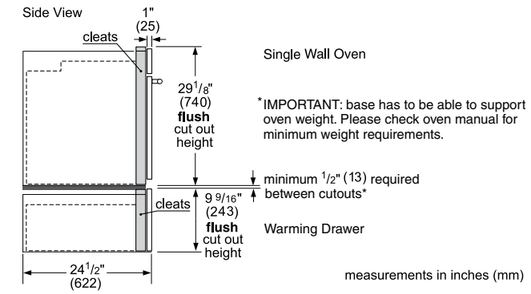

Standard Installation
27" Speed Oven or Microwave over Single Oven

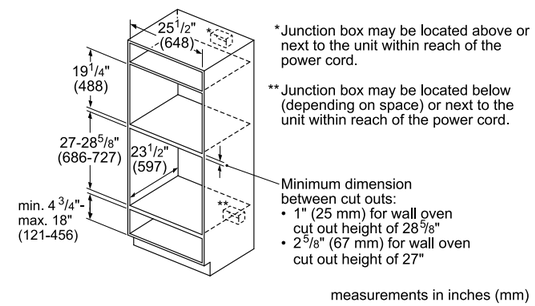

Flush Installation
Speed Oven or Microwave over 27" Single Oven

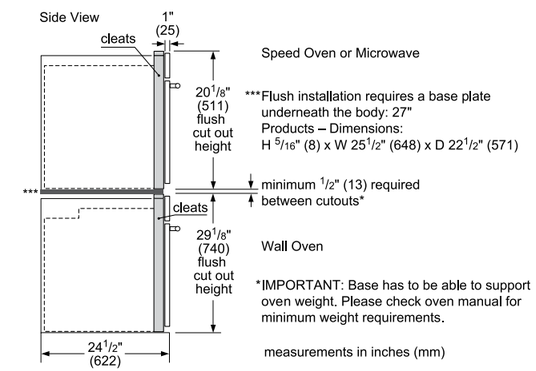

500 / 800 Series 30" Double Wall Ovens

Installed in combination with other products.

Standard Installation
30" Double Oven over Storage or Warming Drawer

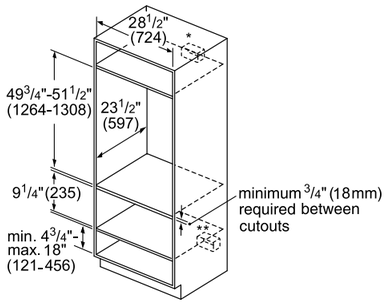

measurements in inches (mm)

*Wall oven junction box may be located above or right or left of the unit within reach of the power conduit.

**Electrical hook up may be located below (depending on space) or next to the drawer within the reach of the power cord.

Flush Installation
Double Oven over Storage or Warming Drawer

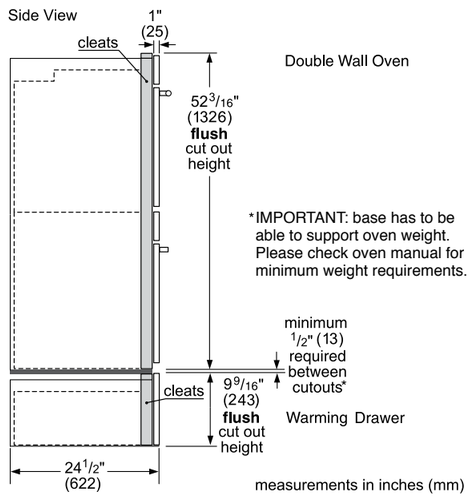

500 / 800 Series 27" Double Wall Ovens

Installed in combination with other products.

Standard Installation
27" Double Oven over Warming Drawer

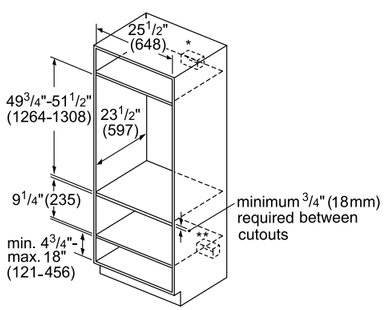

measurements in inches (mm)

*Wall oven junction box may be located above or right or left of the unit within reach of the power conduit.

**Electrical hook up may be located below (depending on space) or next to the drawer within the reach of the power cord.

Flush Installation
Double Oven over Warming Drawer

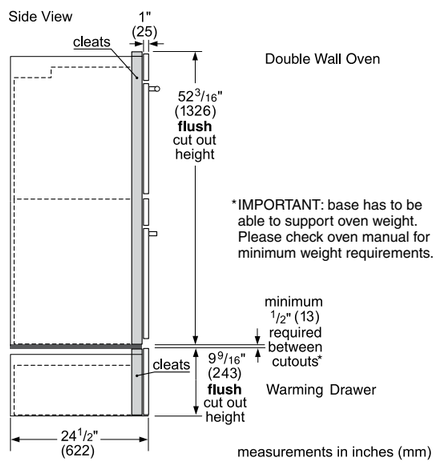

500 / 800 Speed Combination Ovens

Installed in combination with other products.

Standard Installation
Combination Oven over Storage or Warming Drawer

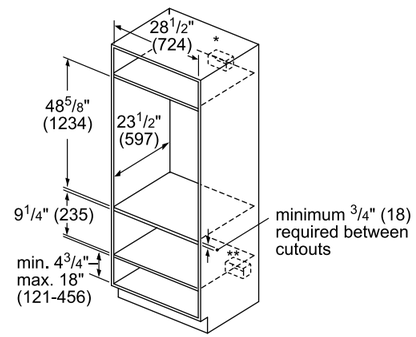

*Wall oven junction box may be located above or right or left of the unit within reach of the power conduit.

**Electrical hook up may be located below (depending on space) or next to the drawer within the reach of the power cord.

Measurements in inches (mm)

Flush Installation
Combination Oven over Storage or Warming Drawer

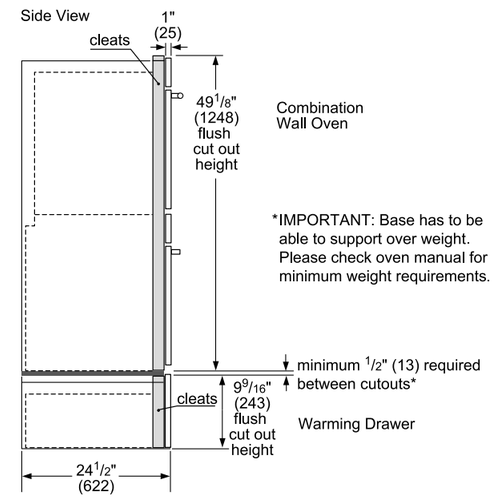

Measurements in inches (mm)

Microwaves & Drawers

Bosch microwaves simplify snack and mealtime by making it easier than ever to prepare foods at the touch of a button. Built in, over-the-range or in a discreet drawer style, Bosch microwaves have automatic sensors to remove the guesswork from cooking and reheating. Our speed ovens combine convection and microwave technology to get meals on the table faster—freeing up more time for other things.
The Bosch 27" or 30" speed ovens can be combined with a warming drawer or storage drawer to align horizontally with our single wall oven. With speed, intuitive controls, large capacities and a clean aesthetic, Bosch microwaves and speed ovens lend a trusted hand in the kitchen when fitting cooking into your busy day.

Benchmark® Series Microwaves

Speed oven

Microwave plus convection

Our 2-in-1 microwave and convection speed oven has 12 microwave programs, 9 AutoChef® speed programs and SpeedChef® that offers faster cooking times.

Built-in design

Designed to fit perfectly above a warming or storage drawer.

Over-the-range microwave

Even cooking

Triple distribution system provides more even cooking.

Over-the-range design

Designed to fit conveniently over a slide-in range.

Benchmark® Series Speed Oven

30" Benchmark® Series
HMCP0252UC

- 1.6 cu. ft.
- European Convection, Broil, Microwave
- SpeedChef® Cooking Modes Offer Faster Cooking Times
- TFT Display
- 240v, Direct Wire

NOTE: Bosch speed ovens can be installed in combination with other Bosch cooking products. See pages 68–69 for details.

	Benchmark® Series
	Stainless Steel – HMCP0252UC
General Properties	
Cavity material	Stainless steel
Max. microwave power (W)	1,000 W
Capacity	
Cavity capacity (cu. ft.)	1.6
Turntable diameter (in.)	14 1/8"
Technical Details	
Watts (W)	3,840 W
Circuit breaker (A)	20 A
Volts (V)	208 – 240 V
Frequency (Hz)	60 Hz
Power cord length (in)	48"
Plug type	Fixed connection, 8" stripped wires
Dimensions & Weight	
Overall appliance dimensions (HxWxD) (in)	19 5/8" x 29 3/4" x 22 3/8"
Required cutout size (HxWxD) (in)	Standard: 19 1/4" x 28 1/2" x 22" Flush: 20 1/8" x 30" x 23 1/2"
Oven overall interior dimensions (HxWxD) (in.)	9 7/8" x 16 1/2" x 16 1/2"
Turntable – metal max. cookware	12 3/4" dia.
Turntable – ceramic max. cookware	12 1/2" dia.
Rack – rectangular cookware max.	15" x 12"
Net weight (lbs)	92 lbs
Accessories – Included	
Included	Metal turntable, cooking rack, ceramic cooking tray

Benchmark® Series Speed Oven

Product Dimensions

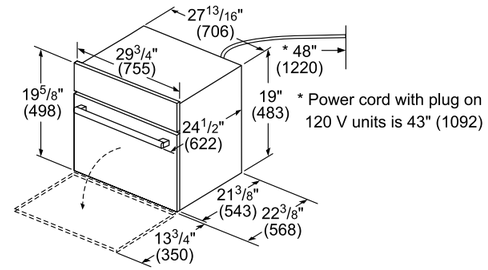

Under-Counter Installation

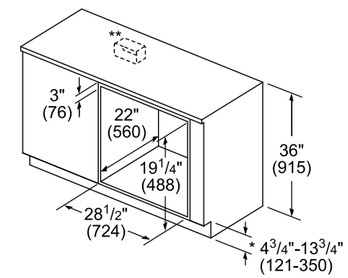

* Includes 3/4" (19) base plate

** Receptacle may be located to the left or right of the unit within reach of the power cord.

Wall Mounted Installation

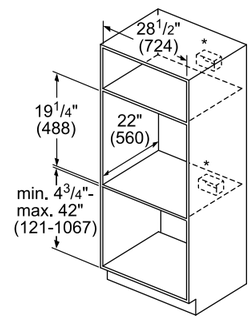

* Receptacle may be located above or beneath the unit within reach of the power cord.

measurements in inches (mm)

Example Flush Install

Single wall oven shown.

Flush Installation

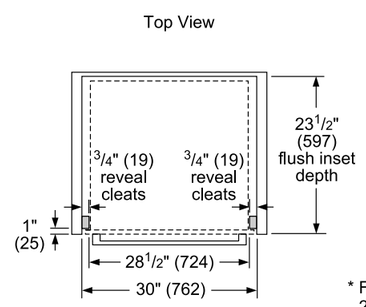

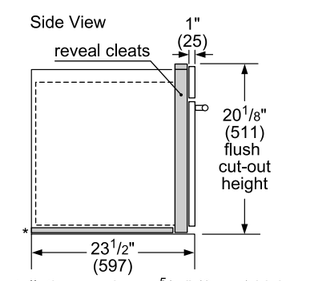

* Flush installation requires a 5/16" (8 mm) high x 28 1/2" (724 mm) wide x 22 1/2" (571 mm) deep baseplate underneath the unit body.

measurements in inches (mm)

500 Series 24" Speed Oven

24" 500 Series
HMC54151UC

- 1.6 cu. ft.
- SpeedChef® Cooking Modes Offer Faster Cooking Times
- Installs Flush with Kitchen Cabinetry
- 2-in-1 Microwave and Convection Oven for a Variety of Cooking Options
- 120v, NEMA 5-20 – 3 Prong Plug

	500 Series
	24" Stainless Steel – HMC54151UC
General Properties	
Cavity material	Stainless steel
Max. microwave power (W)	1,000 W
Capacity	
Cavity capacity (cu. ft.)	1.6
Turntable diameter (in.)	14 3/16"
Technical Details	
Watts (W)	1,920 W
Circuit breaker (A)	20 A
Volts (V)	120 V
Frequency (Hz)	60 Hz
Power cord length (in)	48"
Plug type	NEMA 5-20 – 3 prong plug
Dimensions & Weight	
Overall appliance dimensions (HxWxD) (in)	17 7/8" x 23 7/16" x 22 1/16"
Required cutout size (HxWxD) (in)	Standard: 17 3/4" x 22 5/16" x 22" Flush: 18 7/16" x 24" x 22 3/4"
Oven overall interior dimensions (HxWxD) (in.)	9 7/8" x 16 1/2" x 16 1/2"
Turntable – metal max. cookware	12 3/4" dia.
Turntable – ceramic max. cookware	12 1/2" dia.
Rack – rectangular cookware max.	15" x 12"
Net weight (lbs)	83 lbs
Accessories – Included	
Included	Metal turntable, cooking rack, ceramic cooking tray

500 Series 24" Speed Oven

Product Dimensions

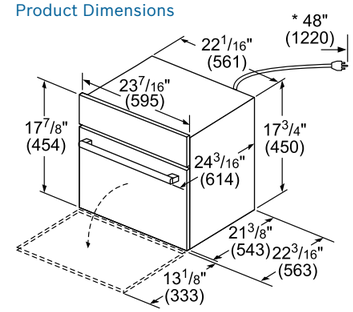

Under-Counter Installation

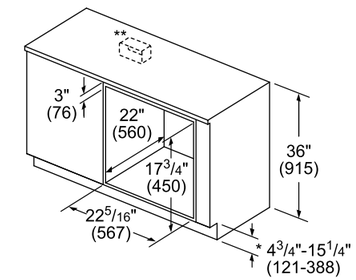

* Includes 3/4" (19) base plate

** Receptacle may be located to the left or right of the unit within reach of the power cord.

Wall Mounted Installation

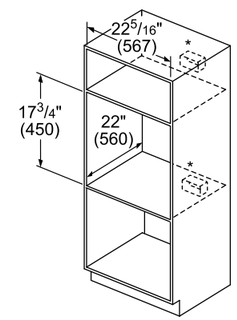

* Receptacle may be located above or beneath the unit within reach of the power cord.

Notice:
The cabinet base must be flat and capable of supporting a weight of at least 142 lbs (64.1 kg).

Example Flush Install

Single wall oven shown.

Flush Installation

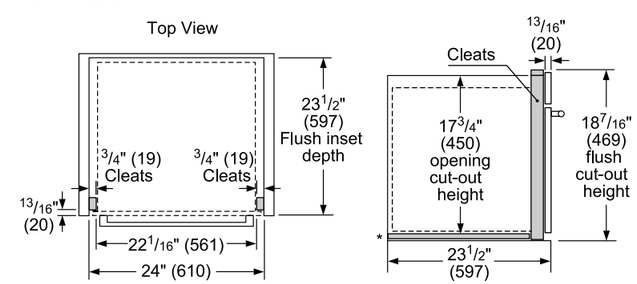

* Baseplate 5/16" (8)

800 Series Speed Ovens

800 Series
30" – HMC80152UC
27" – HMC87152UC

- 1.6 cu. ft.
- SpeedChef® Cooking Modes Offer Faster Cooking Times
- Installs Flush with Kitchen Cabinetry
- 120v, NEMA 5-20 – 3 Prong Plug

30" 800 Series
HMC80252UC (Stainless Steel)
HMC80242UC (Black Stainless Steel)

- 1.6 cu. ft.
- SpeedChef® Cooking Modes Offer Faster Cooking Times
- Installs Flush with Kitchen Cabinetry
- 240v, Direct Wire

Black
Stainless Steel

	800 Series	800 Series
	30" Stainless Steel – HMC80152UC 27" Stainless Steel – HMC87152UC	30" Stainless Steel – HMC80252UC 30" Black Stainless Steel – HMC80242UC
General Properties		
Cavity material	Stainless steel	Stainless steel
Max. microwave power (W)	1,000 W	1,000 W
Capacity		
Cavity capacity (cu. ft.)	1.6	1.6
Turntable diameter (in.)	14 1/8"	14 1/8"
Technical Details		
Watts (W)	1,920 W	3,840 W
Circuit breaker (A)	20 A	16 A
Volts (V)	120 V	208 – 240 V
Frequency (Hz)	60 Hz	60 Hz
Power cord length (in)	43"	48"
Plug type	NEMA 5-20 – 3 prong plug	Fixed connection, 8" stripped wires
Dimensions & Weight		
Overall appliance dimensions (HxWxD) (in)	30": 19 5/8" x 29 3/4" x 22 3/8" 27": 19 5/8" x 26 3/4" x 22 3/8"	19 5/8" x 29 3/4" x 22 3/8"
Required cutout size (HxWxD) (in)	30" Standard: 19 1/4" x 28 1/2" x 22" 30" Flush: 20 1/8" x 30" x 23 1/2" 27" Standard: 19 1/4" x 25 1/2" x 22" 27" Flush: 20 1/8" x 27" x 23 1/2"	Standard: 19 1/4" x 28 1/2" x 22" Flush: 20 1/8" x 30" x 23 1/2"
Oven overall interior dimensions (HxWxD) (in.)	9 7/8" x 16 1/2" x 16 1/2"	9 7/8" x 16 1/2" x 16 1/2"
Turntable – metal max. cookware	12 3/4" dia.	12 3/4" dia.
Turntable – ceramic max. cookware	12 1/2" dia.	12 1/2" dia.
Rack – rectangular cookware max.	15" x 12"	15" x 12"
Net weight (lbs)	92 lbs / 87 lbs	92 lbs
Accessories – Included		
Included	Metal turntable, cooking rack, ceramic cooking tray	Metal turntable, cooking rack, ceramic cooking tray

30" Flush Installation

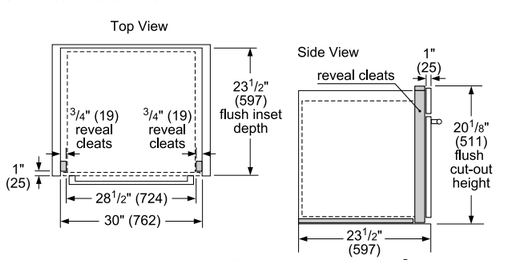

* Flush installation requires a 5/16" (8 mm) high x 28 1/2" (724 mm) wide x 22 1/2" (571 mm) deep baseplate underneath the unit body.

measurements in inches (mm)

27" Flush Installation

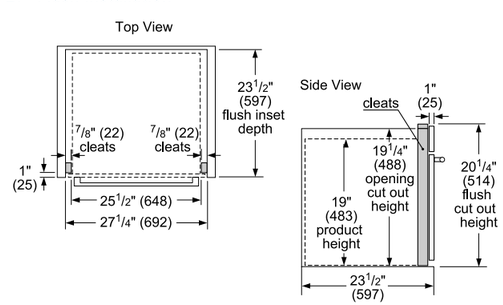

measurements in inches (mm)

800 Series Speed Ovens

30" Speed Oven Dimensions

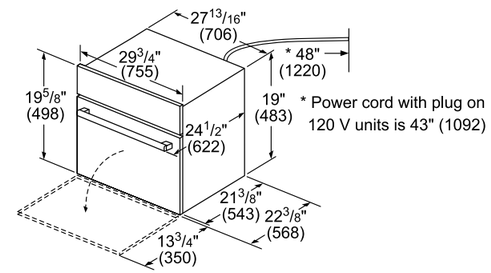

27" Speed Oven Dimensions

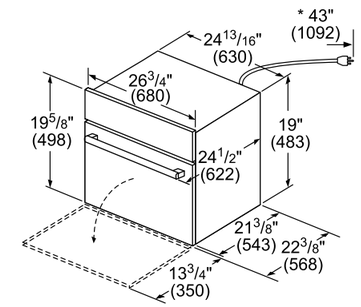

30" Speed Oven Under-Counter

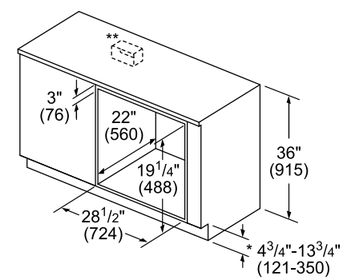

* Includes 3/4" (19) base plate

** Receptacle may be located to the left or right of the unit within reach of the power cord.

27" Speed Oven Under-Counter

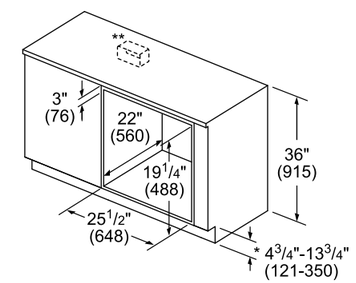

* Includes 3/4" (19) base plate

** Receptacle may be located to the left or right of the unit within reach of the power cable.

30" Speed Oven Wall-Mounted

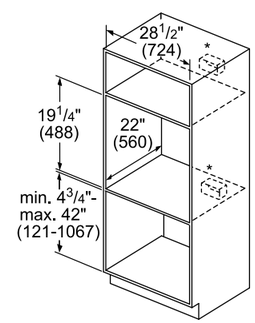

* Receptacle may be located above or beneath the unit within reach of the power cord.

measurements in inches (mm)

27" Speed Oven Wall-Mounted

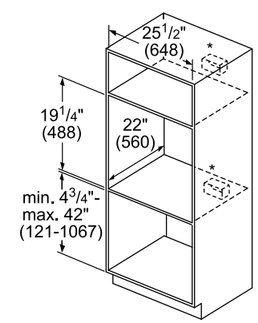

* Receptacle may be located above or beneath the unit within reach of the power cable.

measurements in inches (mm)

30" HMC80152UC
27" HMC87152UC

NOTE: Bosch Speed ovens can be installed in combination with other Bosch cooking products. See pages 72–73 for details. Horizontal installation of a 27" oven next to a 27" speed oven with warming drawer is possible, but the speed oven and warming drawer require either two cutouts or one cutout with a shelf support in between.

500 Series Storage and Warming Drawers

30" 500 Series Storage Drawer
HSD5051UC

- 2.4 cu. ft.
- The Storage Drawer Fits 30" Racks, the Meat Probe and Other Cooking Relevant Utensils
- A Silicone Mat Protects the Bottom of Drawer
- Installs Vertically Under Bosch Speed, Steam or Wall Oven

500 Series Warming Drawer
30" – HWD5051UC
27" – HWD5751UC

- 2.2 cu. ft. (27" is 1.9 cu. ft.)
- + Warming Drawer
- + 3 Settings, Timer
- 30" Installs Vertically Under Bosch Speed, Steam or Wall Oven
- 27" Installs Vertically Under Bosch 120V Speed, or Wall Oven (Separate Cut Outs Needed)

+ Indicates a step-up feature

	Storage Drawer	Warming Drawers
	30" Stainless Steel – HSD5051UC	30" Stainless Steel – HWD5051UC 27" Stainless Steel – HWD5751UC
General Properties		
Power levels	N/A	High, low, medium
Dough proofing mode	N/A	Yes
Temperature range	N/A	100° – 190° F
Timer 5 min. – 5 hours	N/A	Yes
Automatic shut off after 1 hour	N/A	Yes
Door opening	Push to open	Push to open
Hinges	Ball bearing hinges	Ball bearing hinges
Wattage heating element	N/A	450 W
Control type	N/A	Illuminated TouchControl
Capacity		
Cavity capacity (cu. ft.)	2.4 cu. ft.	30": 2.2 cu. ft. 27": 1.9 cu. ft.
Technical Details		
Watts (W)	N/A	450 W
Circuit breaker (A)	N/A	15 A
Volts (V)	N/A	120 V
Frequency (Hz)	N/A	60 Hz
Power cord length (in)	N/A	84"
Plug type	N/A	120V – 3 prong
Dimensions & Weight		
Overall appliance dimensions (HxWxD) (in)	9 7/16" x 29 3/4" x 23 1/2"	30": 9 7/16" x 29 3/4" x 23 1/2" 27": 9 7/16" x 26 3/4" x 23 1/2"
Required cutout size (HxWxD) (in)	9 1/4" x 28 1/2" x 23 1/2"	30": 9 1/4" x 28 1/2" x 23 1/2" 27": 9 1/4" x 25 1/2" x 23 1/2"
Net weight (lbs)	47 lbs	30": 55 lbs 27": 50 lbs
Accessories – Included		
Installation brackets	Install drawer below speed or steam oven in one cut out (identical to single wall oven cut out)	30" model: Install drawer below speed or steam oven in one cut out (identical to single wall oven cut out). Products still need to be hooked up individually.
Drawer mat	Rubber mat to protect bottom of drawer	N/A

500 Series Storage and Warming Drawers

30" Storage / Warming Drawer Dimensions

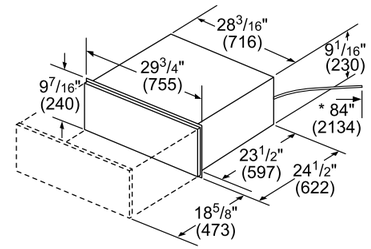

* Power cord on warming drawer is 84" (2134 mm)

27" Warming Drawer Dimensions

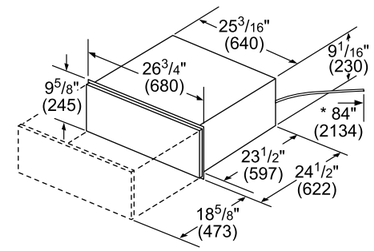

* Power cord on warming drawer is 84" (2134 mm)

30" Storage / Warming Drawer Wall-Mounted

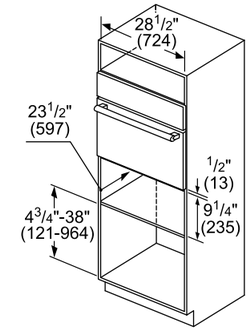

measurements in inches (mm)

27" Warming Drawer Wall-Mounted

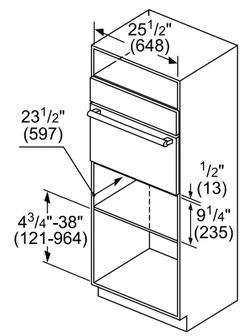

measurements in inches (mm)

30" Speed Oven Over Storage / Warming Drawer

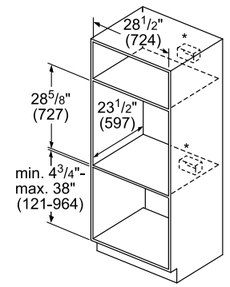

* For installation into a wall cabinet, the receptacle may be installed above, below, or to the left or right of the unit within range of the power cord.

Speed Oven Over Storage / Warming Drawer

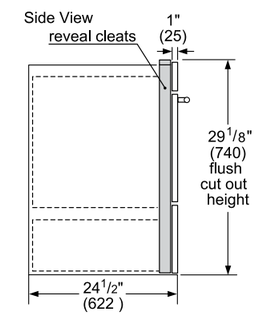

Measurements in inches (mm)

30" Flush Installation

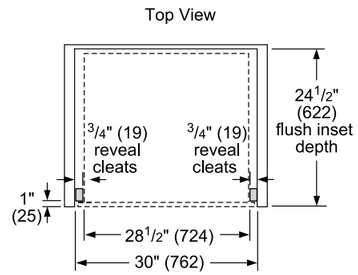

27" Flush Installation

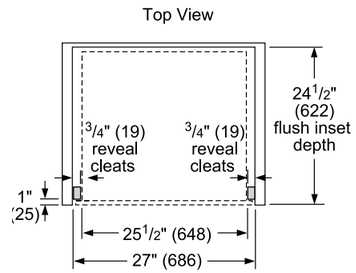

30" & 27" Flush Installation

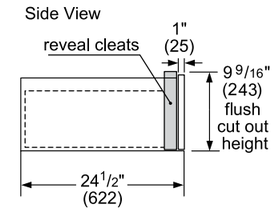

NOTE: See pages 67–75 for planning and installation details when installing Bosch storage and warming drawers in combination with other Bosch products. Horizontal installation of a 27" oven next to a 27" speed oven with warming drawer is possible, but the speed oven and warming drawer require either two cutouts or one cutout with a shelf support in between.

Benchmark® Series Over-the-Range Microwave

30" Benchmark® Series
HMVP053U

- 1.8 cu. ft.
- Triple Distribution Offers More Even Cooking
- 1,450 Watts Convection Cooking
- 1,000 Watts Microwave Cooking
- Stainless Steel Cavity

	30" Benchmark® Series
	Stainless Steel – HMVP053U
General Properties	
Cavity material	Stainless steel
Max. microwave power (W)	1,000 W
Max. extraction rate (CFM)	385 CFM
Ducted	Yes
Ductless	Yes
Duct size	3 1/4" x 10"
Capacity	
Cavity capacity (cu. ft.)	1.8 cu. ft.
Turntable diameter (in.)	14 3/16"
Technical Details	
Watts (W)	1,450 W
Circuit breaker (A)	15 A
Volts (V)	120 V
Frequency (Hz)	60 Hz
Power cord length (in)	39"
Plug type	120V – 3 prong
Dimensions & Weight	
Overall appliance dimensions (HxWxD) (in)	16 1/2" x 29 7/8" x 15 7/8"
Required cutout size (HxWxD) (in)	17 1/2" min x 30" x 12" min – 14" max
Net weight (lbs)	54 lbs
Accessories – Included	
Included	Two level cooking rack

Benchmark® Series Over-the-Range Microwave

Product Dimensions

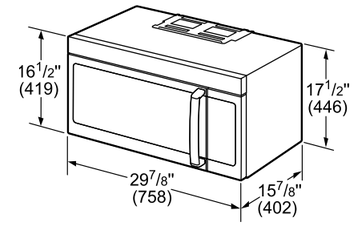

measurements in inches (mm)

Venting Options

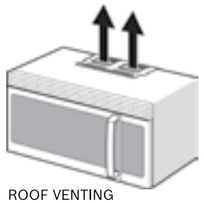

ROOF VENTING

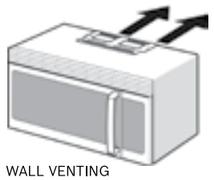

WALL VENTING

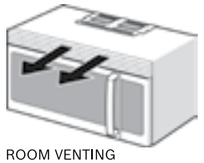

ROOM VENTING

Cutout and Clearances

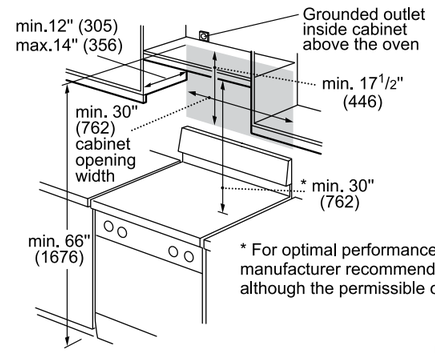

* For optimal performance and reliability, the manufacturer recommends a clearance of 33"–36", although the permissible clearance must be at least 30".

measurements in inches (mm)

300 / 500 / 800 Series
Over-the-Range Microwaves

300 Series
HMV3053U

- 1.6 cu. ft.
- 1,000 Watts Microwave Cooking
- Auto Cook Functions
- 300 CFM

500 Series
HMV5053U

+ 2.1 cu. ft.
+ 1,100 Watts Microwave Cooking
+ Sensor Cooking
+ 385 CFM

800 Series
HMV8053U (Stainless Steel)
HMV8044U (Black Stainless Steel)

- 1.8 cu. ft.
- 1,000 Watts Microwave Cooking
+ 1,450 Watts Convection Cooking
+ Stainless Steel Cavity

Black
Stainless Steel

+ Indicates a step-up feature

	30" – 300 Series	30" – 500 Series	30" – 800 Series
	Stainless Steel – HMV3053U	Stainless Steel – HMV5053U	Stainless Steel – HMV8053U Black Stainless Steel – HMV8044U
General Properties			
Cavity color	White	White	Stainless steel
Max. microwave power (W)	1,000 W	1,100 W	1,000 W
Max. extraction rate (CFM)	300 CFM	385 CFM	385 CFM
Ducted	Yes	Yes	Yes
Ductless	Yes	Yes	Yes
Duct size	3 1/4" x 10"	3 1/4" x 10"	3 1/4" x 10"
Capacity			
Cavity capacity (cu. ft.)	1.6 cu. ft.	2.1 cu. ft.	1.8 cu. ft.
Turntable diameter (in.)	13 5/8"	14 3/16"	14 3/16"
Technical Details			
Watts (W)	1,550 W	1,550 W	1,450 W
Circuit breaker (A)	15 A	15 A	15 A
Volts (V)	120 V	120 V	120 V
Frequency (Hz)	60 Hz	60 Hz	60 Hz
Power cord length (in)	39"	39"	39"
Plug type	120V – 3 prong	120V – 3 prong	120V – 3 prong
Dimensions & Weight			
Overall appliance dimensions (HxWxD) (in)	15 3/4" x 29 7/8" x 15 3/8"	16 1/2" x 29 7/8" x 15 7/8"	16 1/2" x 29 7/8" x 15 7/8"
Required cutout size (HxWxD) (in)	16 1/2" min x 30" x 12" min – 12 7/8" max	17 1/2" min x 30" x 12" min – 14" max	17 1/2" min x 30" x 12" min – 14" max
Net weight (lbs)	54 lbs	54 lbs	54 lbs
Accessories – Included			
Included	N/A	N/A	Two level cooking rack

300 / 500 / 800 Series
Over-the-Range Microwaves

300 Series Product Dimensions

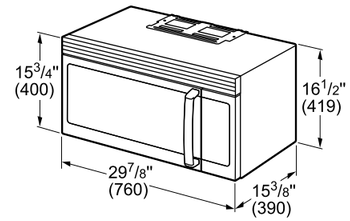

Measurements in inches (mm)

500 / 800 Series Product Dimensions

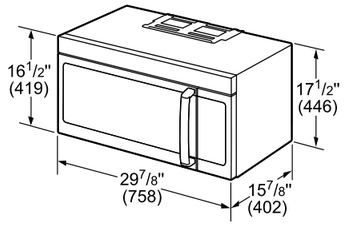

measurements in inches (mm)

300 Series Cutout and Clearances

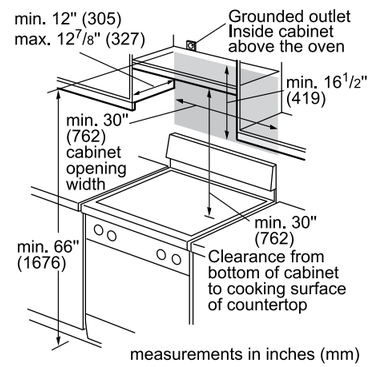

measurements in inches (mm)

300 / 500 / 800 Series Venting Options

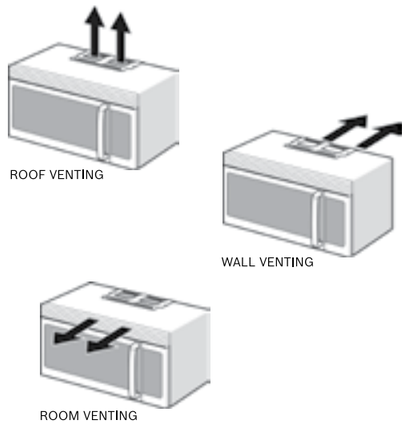

500 / 800 Series Cutout and Clearances

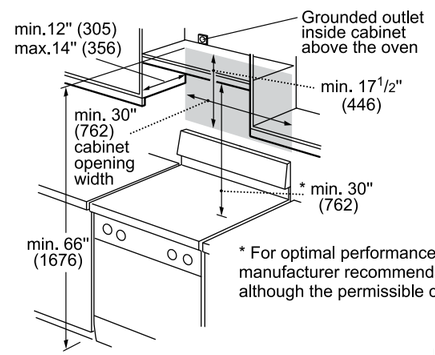

* For optimal performance and reliability, the manufacturer recommends a clearance of 33"–36", although the permissible clearance must be at least 30".

measurements in inches (mm)

800 Series Drawer Microwaves

24" 800 Series
HMD8451UC

- 1.2 cu. ft.
- 950 Watts Microwave Cooking
- 10 Power Levels
- Flush Installation

30" 800 Series
HMD8053UC

- 1.2 cu. ft.
- 950 Watts Microwave Cooking
- 10 Power Levels
- Flush Installation

The Flush-Mount Drawer Microwave

Open your design options. The Bosch drawer microwave installs cleanly under counters, cooktops, and flush to cabinets, letting you take advantage of extra space in a kitchen island, for example. The drawer microwave opens and closes with a push of a button and is large enough to fit a 9" x 13" baking oven pan or a 4 qt. casserole dish.

	24" – 800 Series	30" – 800 Series
	Stainless Steel – HMD8451UC	Stainless Steel – HMD8053UC
General Properties		
Cavity material	White	White
Max. microwave power (W)	950 W	950 W
Capacity		
Cavity capacity (cu. ft.)	1.2 cu. ft.	1.2 cu. ft.
Technical Details		
Watts (W)	1,500 W	1,500 W
Circuit breaker (A)	15 A	15 A
Volts (V)	120 V	120 V
Frequency (Hz)	60 Hz	60 Hz
Power cord length (in)	48"	48"
Plug type	120V – 3 prong	120V – 3 prong
Dimensions & Weight		
Overall appliance dimensions (HxWxD) (in)	16 5/16" x 23 7/8" x 23 3/8"	16 5/16" x 30" x 23 3/8"
Required cutout size (HxWxD) (in)	14 13/16" x 22 1/8" x 23 1/2"	14 13/16" x 28 1/4" x 23 1/2"
Net weight (lbs)	81 lbs	82 lbs

800 Series Drawer Microwaves

24" Drawer Microwave Dimensions

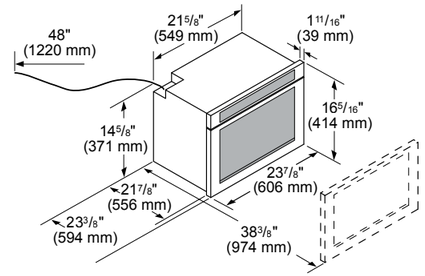

30" Drawer Microwave Dimensions

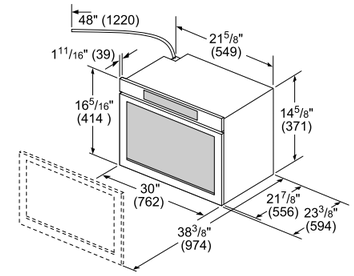

24" Drawer Microwave Standard Installation

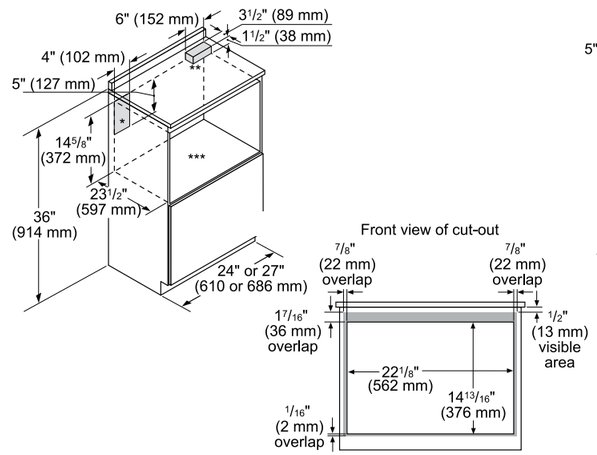

30" Drawer Microwave Standard Installation

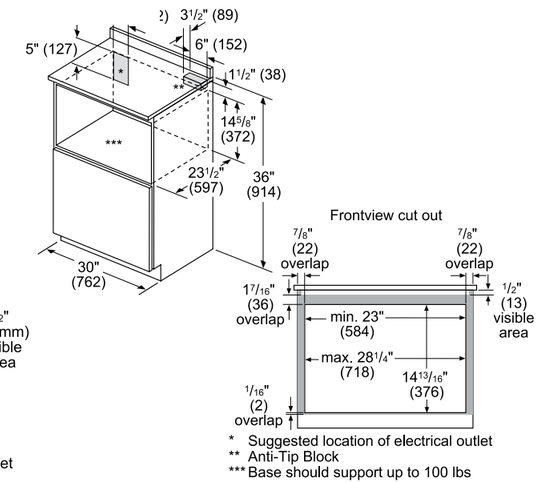

Measurements in inches (mm)

24" Drawer Microwave Flush Installation

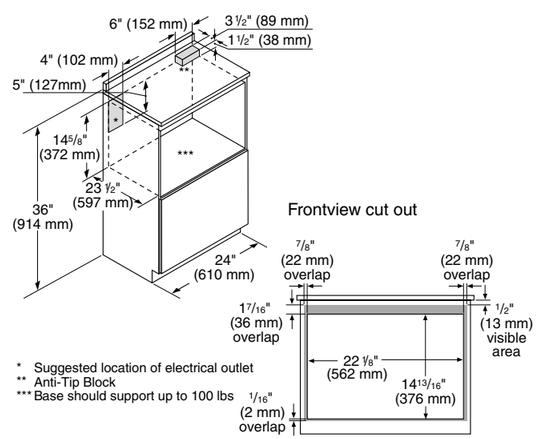

30" Drawer Microwave Flush Installation

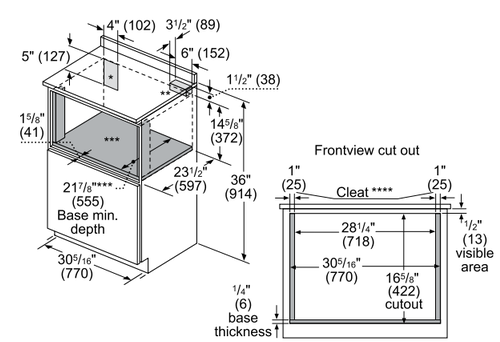

Measurements in inches (mm)

500 Series Built-in Microwaves

27" 500 Series
HMB57152UC

- 1.6 cu. ft.
- 950 Watts Microwave Cooking
- Automatic Sensor Programs
- Designed to Match Bosch Wall Ovens

30" 500 Series
HMB50152UC (Stainless Steel)
HMB50162UC (Black)

- 1.6 cu. ft.
- 950 Watts Microwave Cooking
- Automatic Sensor Programs
- Designed to Match Bosch Wall Ovens

NOTE: Bosch built-in microwaves can be installed in combination with other Bosch cooking products. See pages 72–73 for details.

	27" – 500 Series	30" – 500 Series
	Stainless Steel – HMB57152UC	Stainless Steel – HMB50152UC Black – HMB50162UC
General Properties		
Cavity color	Stainless steel	Stainless steel
Max. microwave power (W)	950 W	950 W
Capacity		
Cavity capacity (cu. ft.)	1.6 cu. ft.	1.6 cu. ft.
Turntable diameter (in.)	14 1/8"	14 1/8"
Technical Details		
Watts (W)	1,650 W	1,650 W
Circuit breaker (A)	15 A	15 A
Volts (V)	120 V	120 V
Frequency (Hz)	60 Hz	60 Hz
Power cord length (in)	43"	43"
Plug type	NEMA 5-15 – 3 prong	NEMA 5-15 – 3 prong
Dimensions & Weight		
Overall appliance dimensions (HxWxD) (in)	19 5/8" x 26 3/4" x 19 5/8"	19 5/8" x 29 3/4" x 19 5/8"
Required cutout size (HxWxD) (in)	Standard: 19 1/4" x 25 1/2" x 19 1/4" Flush: 20 1/4" x 27" x 20 3/4"	Standard: 19 1/4" x 28 1/2" x 19 1/4" Flush: 20 1/4" x 30" x 20 3/4"
Oven overall interior dimensions (HxWxD) (in.)	9 7/8" x 16 1/2" x 16 1/2"	9 7/8" x 16 1/2" x 16 1/2"
Net weight (lbs)	72 lbs	75 lbs
Accessories – Included		
Included	Glass turntable	Glass turntable

500 Series Built-in Microwaves

27" Microwave Dimensions

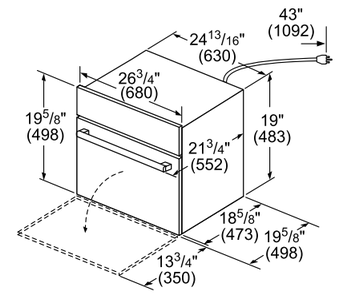

measurements in inches (mm)

30" Microwave Dimensions

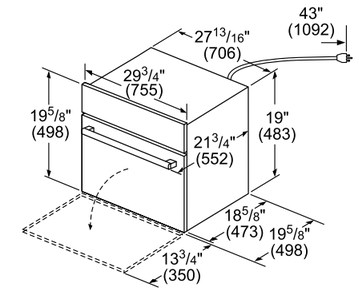

measurements in inches (mm)

27" Microwave Standard Installation

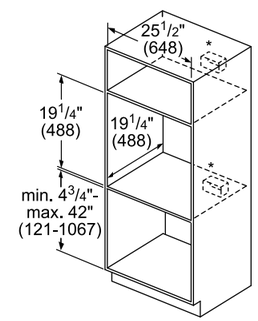

* Receptacle may be located above or beneath the unit within reach of the power cable.

measurements in inches (mm)

30" Microwave Standard Installation

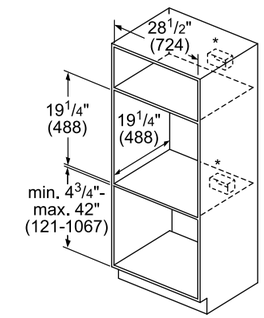

* Receptacle may be located above or beneath the unit within reach of the power cable.

measurements in inches (mm)

27" Microwave Flush Installation

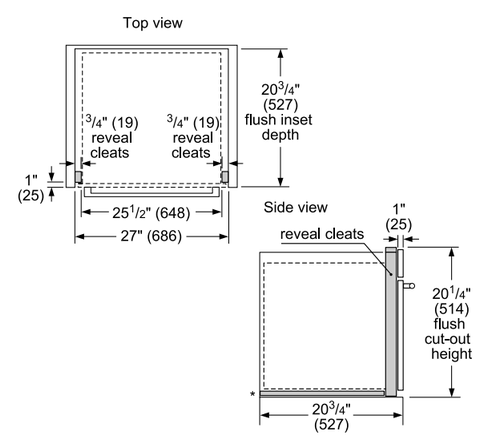

* Flush installation requires a 5/16" (8 mm) high x 25 1/2" (648 mm) wide x 19 3/4" (500 mm) deep base plate underneath the unit body.

measurements in inches

30" Microwave Flush Installation

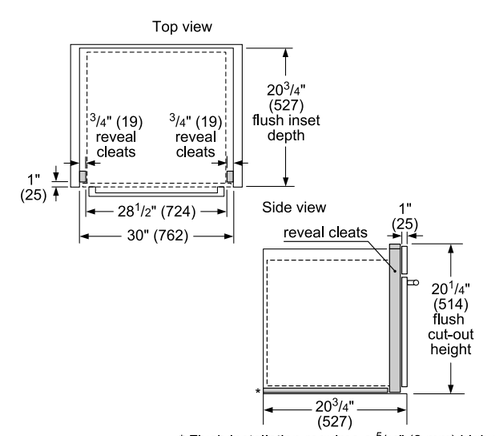

* Flush installation requires a 5/16" (8 mm) high x 28 1/2" (724 mm) wide x 19 3/4" (500 mm) deep base plate underneath the unit body.

measurements in inches

Built-in Coffee Machine

Bosch has brewed up smart ideas to let you craft the perfect cup quickly and easily. Our built-in coffee machine is stylishly designed with innovative technologies to prepare coffee precisely when and how you like it. Whether you wish to wake up to a macchiato, relax with a cappuccino, serve up a strong espresso or froth the perfect latte, Bosch makes it easier to brew it like a barista. And with our intuitive Home Connect™ app, you can control it all from your smartphone or tablet.

Built-in Coffee Machine

Built-in Coffee Machine with Home Connect™
BCM8450UC

- Prepare Espresso, Cappuccino, Latte Macchiato & More in Minutes
- Brew Coffee from Anywhere in Your Home with the Home Connect™ App
- Consistent Brewing Temperature for a Better Tasting Coffee
- Prepare Your Favorite Cup of Coffee with the Simple Touch of a Button
- MyFavorites Stores up to 8 of Your Favorite Coffee Preferences

	Built-in Coffee Machine with Home Connect™
	Stainless Steel – BCM8450UC
General Properties	
Modes	Caffé Latte, Cappuccino, Coffee, Espresso, Espresso Macchiato, Latte Macchiato, Ristretto, Hot Water, Warm Milk, Steam Clean, Clean, Descaling
Settings	One or two cups, adjustable cup sizes, brewing temperature, coffee strength, grind adjustment
Programming	Home Connect™, personalized beverages, remote settings, language, light and display brightness, water hardness, temperature, time, key sounds, demo, child-proof lock
Home Connect™ features	Remote start, additional beverage options, adjustable settings, remote warnings, reminders, play list, coffee recipes, remote diagnosis, tips and trick videos, use and care manual, shop online
Sensor alerts	Water level, bean container, drip tray, coffee grounds
Design Elements	
Display	Large color touch screen
Selection dial	Stainless steel ring
Beverage dispenser	Adjustable
Double cup settings	Yes
Display brightness	Adjustable
Light brightness	Adjustable
Flush installation	Yes
Container access	Front door
Capacity	
Capacity of water container	5/8 gallon
Bean container	1 lb.
Stainless steel milk container	17 oz.
Powder coffee	1 Scoop
Technical Details	
Watts (W)	1,600 W
Circuit breaker (A)	15 A
Current (A)	10 A
Volts (V)	120 V
Frequency (Hz)	60 Hz
Power cord length (in)	39"
Plug type	120V-3 prong
Energy source	Electric
Pump pressure (bar)	275 psi (19 bar)
Grinding system	Ceramic disks
Cleaning system	Automatic
Milk clean system	Steam
Dimensions & Weight	
Overall appliance dimensions (HxWxD) (in) (not including transformer)	23 3/8" W x 17 7/8" H x 14" D
Net weight (lbs)	43 lbs*
Transformer weight (lbs)	27.5 lbs
Accessories – Included	
Stainless steel milk container, powder coffee scoop, 1 water hardness test strip	

Optional Accessories

HEZCMT3050	11005967	00573828	00573829	12008246
30" stainless steel trim kit	Stainless steel milk container	Descaling tablets	Cleaning tablets	Water filter

Built-in Coffee Machine

Product Dimensions and Installation

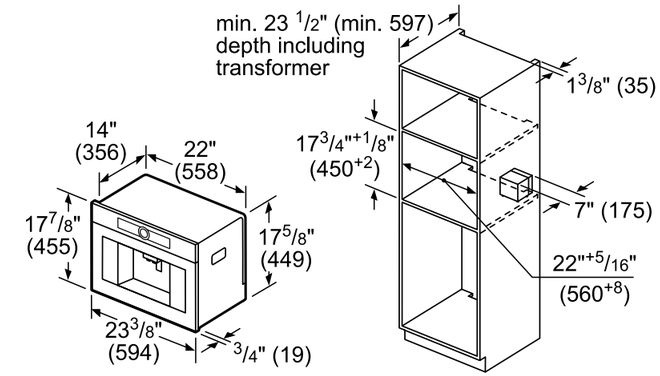

Bean and water reservoir are removed to the front. Recommended installation height 37 1/2"-57" (95-145 cm).

measurements in inches (mm)

Design Tip
The Bosch Built-in Coffee Machine and 30" Trim Kit pair perfectly with a Bosch Warming or Storage Drawer.

30" Warming Drawer – HWD5051UC
30" Storage Drawer – HSD5051UC

Cutout Dimensions with Optional Trim Kit HEZCMT3050

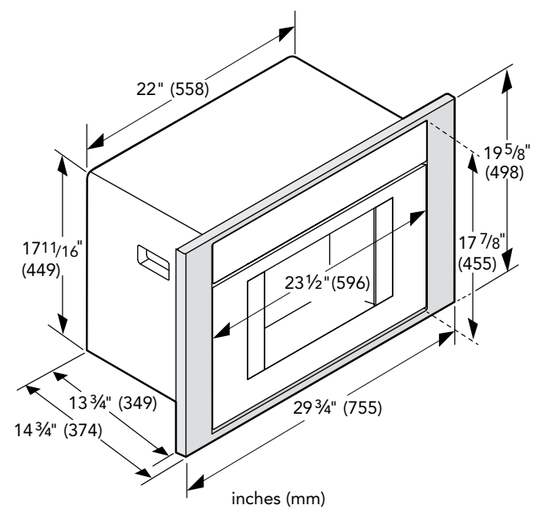

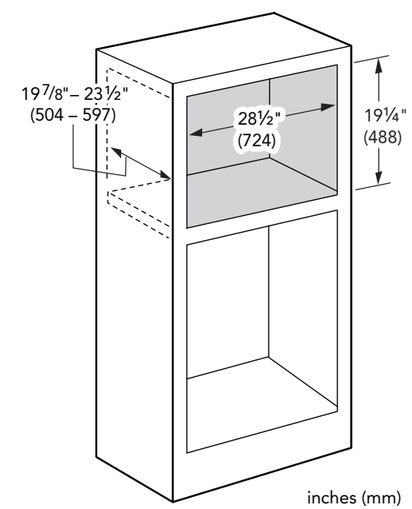

Slide-in Ranges

Combining function and simplicity, Bosch ranges lighten the day's burden to serve as the kitchen's daily companion. Engineered for precision and reliability, they perform tirelessly to bring ease and joy to cooking. Our gas, dual-fuel, induction and electric ranges offer a multitude of ways to cook, with a variety of features that lend speed and efficiency. The oven features Genuine European Convection for even cooking on all racks, while innovative cooking methods like induction make cooking easier.

Benchmark® Series Slide-in Ranges

Bosch slide-in ranges are available in induction, electric, gas or dual-fuel.

Slide-in design

Our convenient, slide-in design lends an instant, built-in look to any kitchen.

QuietClose® door

Our QuietClose® doors never slam shut, instead closing smoothly and effortlessly for stress-free cooking.

Genuine European Convection

The dual-fuel, electric and induction ranges feature Genuine European convection for even baking results on all three racks.

Induction

Faster, more efficient cooking

Induction offers faster cooking and more precise temperature control, resulting in greater speed and efficiency.

Electric

Flexible cooking options

With 5 burners, including a 12" 3,000-watt triple-ring heating element, our Benchmark® Series electric range gives you the ultimate flexibility when cooking.

Gas / Dual-Fuel

Dual-stacked burner

Our gas and dual-fuel ranges feature a powerful 20,000 BTU center, dual-stacked burner that delivers faster boiling and low simmering for greater cooking flexibility.

Benchmark® Series Induction Slide-in Range

HIIP055U (Induction)

- Full-Depth Slide-in Range
- Innovative Induction Technology Offers Precise, Fast and Efficient Cooking
- +FlexInduction®
- +PowerMove
- +QuietClose® Door
- SpeedBoost®
- Temperature Probe
- Warming Drawer
- 4.6 cu. ft.
- +Full-Telescopic Rack
- +2 Oven Lights

+Indicates a step-up feature

	Induction
	Stainless Steel – HIIP055U
General Properties	
Cooking modes	Bake, Variable Broil (Hi & Low), Roast, Warm, Proof Dough, Convection Bake, Convection Broil, Convection Roast, Multi-Rack Genuine European Convection, Convection Conversion, Pizza, Temperature Probe, Fast Preheat, Sabbath
Cleaning type	Self clean
Interior lights	2
Kitchen timer	Yes
Drawer type	Warming drawer
Oven Performance	
Bake / broil element watts (W)	2,400 / 3,800 W
Convection element watts (W)	2,000 W
Element Performance	
Total number of cooktop elements	4
Power of front left element watts (W)	2,200 W (3,600 w/boost)
Power of back left element watts (W)	2,200 W (3,600 w/boost)
Power of back right element watts (W)	2,600 W (3,700 w/boost)
Power of front right element watts (W)	1,400 W (2,200 w/boost)
Element Size	
Dimension of FlexInduction® zone	16" x 9"
Dimension of front left heating element	8" x 9"
Dimension of back left heating element	8" x 9"
Dimension of center heating element	N/A
Dimension of back right heating element	11"
Dimension of front right heating element	6"
Technical Details	
Watts (W)	11,700 / 14,000 W
Circuit breaker (A)	40 A
Volts (V); Frequency (Hz)	208 V / 240 V; 60 Hz
Plug type / Cord length (in.)	N/A / N/A
Energy source	Electric
Dimensions & Weight	
Overall appliance dimensions (HxWxD) (in.)	35 1/2" – 37" x 31 1/2" x 28 7/8"
Required cutout size (HxWxD) (in.)	35 1/2" – 37" x 30" x 25"
Adjustable range height (in.)	1 1/2"
Oven cavity size (cu. ft.)	4.6
Overall oven interior dimensions (HxWxD) (in.)	17 13/16" x 24 1/8" x 18"
Usable oven interior dimensions (HxWxD) (in.)	12 5/16" x 23 1/4" x 15 1/4"
Net weight (lbs)	248 lbs
Accessories – Included	
Included	Use and care manual, installation guide, temperature probe, 2 standard racks, 1 telescopic rack

Benchmark® Series Induction Slide-in Range

Induction Range Dimensions

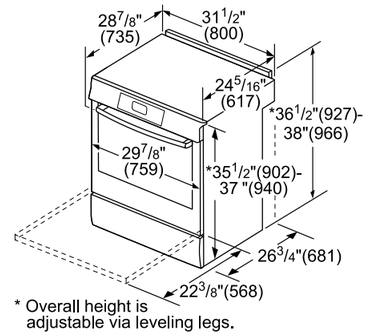

* Overall height is adjustable via leveling legs.

measurements in inches (mm)

Induction Range Cutout Dimensions

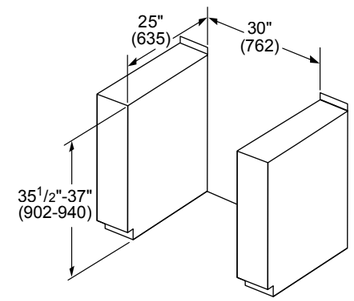

measurements in inches (mm)

Induction Range Installation

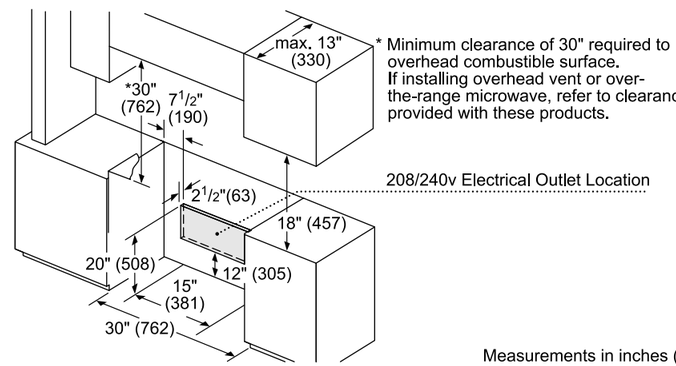

* Minimum clearance of 30" required to overhead combustible surface. If installing overhead vent or over-the-range microwave, refer to clearances provided with these products.

Measurements in inches (mm)

Optional Accessories

HEZTR301
30" Telescopic Rack

HEZBS301
4" Low Backguard

HEZ390210
8" AutoChef® Pan for 6" Element

HEZ390220
9" AutoChef® Pan for 7" Element

HEZ390230
10" AutoChef® Pan for 8" and 9" Elements

Benchmark® Series Electric Slide-in Range

HEIP054U (Electric)

- Full-Depth Slide-in Range
- +12" 3,000-Watt Triple-Ring Element
- 9.5" 3,200- / 1100-Watt Versatile Element
- 4 Elements + 1 Warming Zone
- +QuietClose® Door
- +Telescopic Rack
- +Temperature Probe
- Warming Drawer
- 4.6 cu. ft.
- +2 Oven Lights

+Indicates a step-up feature

	Electric
	Stainless Steel – HEIP054U
General Properties	
Cooking modes	Bake, Variable Broil (Hi & Low), Roast, Warm, Proof Dough, Convection Bake, Convection Broil, Convection Roast, Multi-Rack Genuine European Convection, Convection Conversion, Pizza, Temperature Probe, Fast Preheat, Sabbath
Cleaning type	Self clean
Knob material	Metal
Interior lights	2
Kitchen timer	Yes
Drawer type	Warming drawer
Oven Performance	
Bake / broil element watts (W)	2,400 / 3,800 W
Convection element watts (W)	2,000 W
Element Performance	
Total number of cooktop elements	5
Power of front left element watts (W)	1,050 / 1,950 / 3,000 W
Power of back left element watts (W)	1,200 W
Power of center element watts (W)	100 W
Power of back right element watts (W)	1,200 W
Power of front right element watts (W)	1,100 / 3,200 W
Element Size	
Dimension of front left heating element	6" / 9" / 12"
Dimension of back left heating element	6"
Dimension of center heating element	6"
Dimension of back right heating element	6"
Dimension of front right heating element	9.5"
Technical Details	
Watts (W)	11,300 / 14,800 W
Circuit breaker (A)	40 A
Volts (V); Frequency (Hz)	208 V / 240 V; 60 Hz
Plug type / Cord length (in.)	N/A / N/A
Energy source	Electric
Dimensions & Weight	
Overall appliance dimensions (HxWxD) (in.)	35 1/2" – 37" x 31 1/2" x 28 7/8"
Required cutout size (HxWxD) (in.)	35 1/2" – 37" x 30" x 25"
Adjustable range height (in.)	1 1/2"
Oven cavity size (cu. ft.)	4.6
Overall oven interior dimensions (HxWxD) (in.)	17 13/16" x 24 1/8" x 18"
Usable oven interior dimensions (HxWxD) (in.)	12 5/16" x 23 1/4" x 15 1/4"
Net weight (lbs)	248 lbs
Accessories – Included	
Included	Use and care manual, installation guide, temperature probe, 2 standard racks, 1 telescopic rack

Benchmark® Series Electric Slide-in Range

Electric Range Dimensions

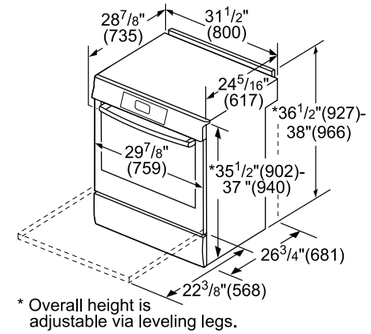

* Overall height is adjustable via leveling legs.

measurements in inches (mm)

Electric Range Cutout Dimensions

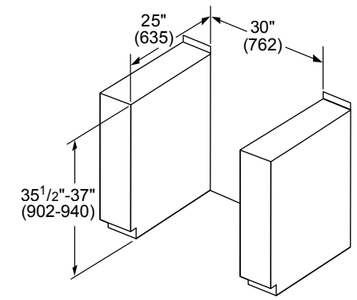

measurements in inches (mm)

Electric Range Installation

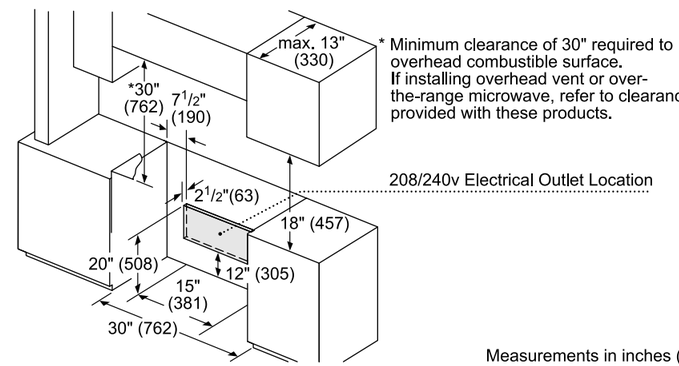

* Minimum clearance of 30" required to overhead combustible surface. If installing overhead vent or over-the-range microwave, refer to clearances provided with these products.

Measurements in inches (mm)

Optional Accessories

HEZTR301
30" Telescopic Rack

HEZBS301
4" Low Backguard

HEZ390210
8" AutoChef® Pan for 6" Element

HEZ390220
9" AutoChef® Pan for 7" Element

HEZ390230
10" AutoChef® Pan for 8" and 9" Elements

Benchmark® Series Dual-Fuel Slide-in Range

HDIP054U (Dual-Fuel)

- Full-Depth Slide-in Range
- 5 Burners
- +20,000 BTU Dual-Stacked Burner
- Multi-Rack Genuine European Convection
- +QuietClose® Door
- +Telescopic Rack
- Temperature Probe
- Warming Drawer
- 4.6 cu. ft.
- +2 Oven Lights

+Indicates a step-up feature

	Dual-Fuel
	Stainless Steel – HDIP054U
General Properties	
Cooking modes	Bake, Variable Broil (Hi & Low), Roast, Warm, Proof Dough, Convection Bake, Convection Broil, Convection Roast, Multi-Rack Genuine European Convection, Convection Conversion, Pizza, Temperature Probe, Fast Preheat, Sabbath
Cleaning type	Self clean
Type of grate	Cast iron
Knob material	Metal
Interior light	2
Kitchen timer	Yes
Drawer type	Warming drawer
Sealed burners	Yes
Oven Performance	
Bake / broil element watts (W)	2,400 W / 3,800 W
Convection element watts (W)	2,000 W
Burner Performance	
Total number of cooktop burners	5
Total cooktop (NG / LP) BTU	55,000 / 48,500
Power of front left burner (NG / LP) BTU	10,000 / 8,000
Power of back left burner (NG / LP) BTU	5,000 / 5,000
Power of center burner (NG / LP) BTU	20,000 / 17,000
Power of back right burner (NG / LP) BTU	5,000 / 5,000
Power of front right burner (NG / LP) BTU	15,000 / 13,500
Technical Details	
Watts (W)	4,800 / 6,400 W
Circuit breaker (A)	30 A
Volts (V)	208 V / 240 V
Frequency (Hz)	60 Hz
Plug type / Cord length (in.)	N/A / N/A
Energy source	Mixed electric / gas
Gas type	Natural gas 15 mbar (USA)
Alternative gas type	LP 27, 5 mbar (USA)
Dimensions & Weight	
Overall appliance dimensions (HxWxD) (in.)	36 1/2" – 37" x 31 1/2" x 29 1/6"
Required cutout size (HxWxD) (in.)	35 1/2" – 37" x 30" x 25 1/8"
Adjustable range height (in.)	1 1/2"
Oven cavity size (cu. ft.)	4.6
Overall oven interior dimensions (HxWxD) (in.)	17 13/16" x 24 1/8" x 18"
Usable oven interior dimensions (HxWxD) (in.)	12 5/16" x 23 1/4" x 15 1/4"
Net weight (lbs)	243 lbs
Accessories – Included	
Included	Use and care manual, installation guide, temperature probe, LP conversion kit, 2 standard racks, 1 telescopic rack

Benchmark® Series Dual-Fuel Slide-in Range

Dual-Fuel Range Dimensions

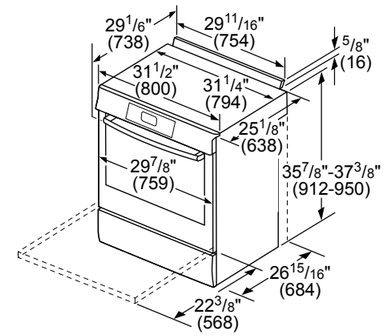

measurements in inches (mm)

Dual-Fuel Range Cutout Dimensions

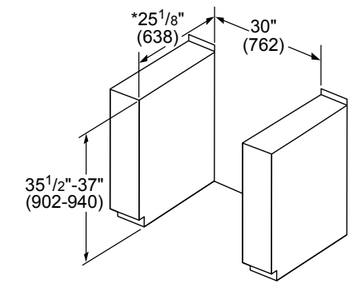

measurements in inches (mm)

Dual-Fuel Range Installation

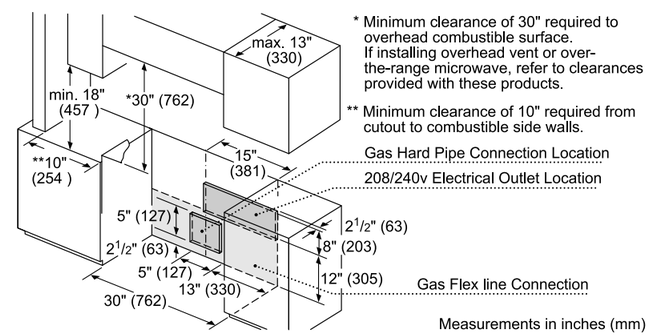

Measurements in inches (mm)

Island Trim – Dual-Fuel Range

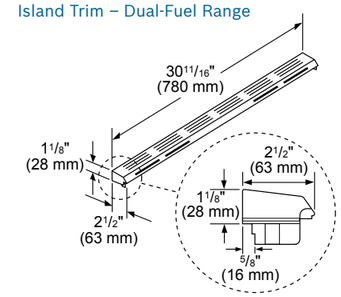

Measurements in inches

Optional Accessories

HEZTR301
30" Telescopic Rack

HDZBS301
4" Low Backguard, Dual-Fuel

HEZGR301
Griddle

HEZ298102
Wok Ring

HGZIT301
Island Trim for Island Applications, Dual-Fuel

Benchmark® Series Gas Slide-in Range

HGIP054UC (Gas)

- Full-Depth Slide-in Range
- 5 Burners
- **+** 20,000 BTU Dual-Stacked Burner
- **+** QuietClose® Door
- **+** Telescopic Rack
- **+** Temperature Probe
- Warming Drawer
- 4.8 cu. ft.
- **+** 2 Oven Lights

+ Indicates a step-up feature

	Gas
	Stainless Steel – HGIP054UC
General Properties	
Cooking modes	Bake, Variable Broil (Hi & Low), Roast, Warm, Proof Dough, Convection Bake, Convection Roast, Convection Conversion, Pizza, Temperature Probe, Sabbath
Cleaning type	Self clean
Type of grate	Cast iron
Knob material	Metal
Interior light	2
Kitchen timer	Yes
Drawer type	Warming drawer
Sealed burners	Yes
Oven Performance	
Bake / broil burner power BTU	18,000 / 12,500 BTU
Bake / broil element watts (W)	N/A
Convection element watts (W)	N/A
Burner Performance	
Total number of cooktop burners	5
Total cooktop (NG / LP) BTU	55,000 / 48,500
Power of front left burner (NG / LP) BTU	10,000 / 8,000
Power of back left burner (NG / LP) BTU	5,000 / 5,000
Power of center burner (NG / LP) BTU	20,000 / 17,000
Power of back right burner (NG / LP) BTU	5,000 / 5,000
Power of front right burner (NG / LP) BTU	15,000 / 13,500
Technical Details	
Circuit breaker (A)	15 A
Volts (V)	120 V
Frequency (Hz)	60 Hz
Plug type	US 3-prong
Cord length (in.)	78"
Energy source	Gas
Gas type	Natural gas 15 mbar (USA)
Alternative gas type	LP 27, 5 mbar (USA)
Dimensions & Weight	
Overall appliance dimensions (HxWxD) (in.)	36 1/2" – 37" x 31 1/2" x 29 3/16"
Required cutout size (HxWxD) (in.)	35 1/2" – 37" x 30" x 25 1/4"
Adjustable range height (in.)	1 1/2"
Oven cavity size (cu. ft.)	4.8
Overall oven interior dimensions (HxWxD) (in.)	17 13/16" x 24 1/8" x 18"
Usable oven interior dimensions (HxWxD) (in.)	11 1/2" x 23 1/4" x 15 1/4"
Net weight (lbs)	243 lbs
Accessories – Included	
Included	Use and care manual, installation guide, temperature probe, LP conversion kit, 2 standard racks, 1 telescopic rack

Benchmark® Series Gas Slide-in Range

Gas Range Dimensions

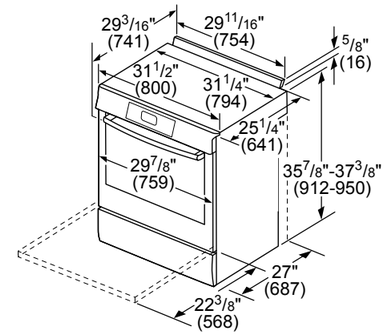

measurements in inches (mm)

Gas Range Cutout Dimensions

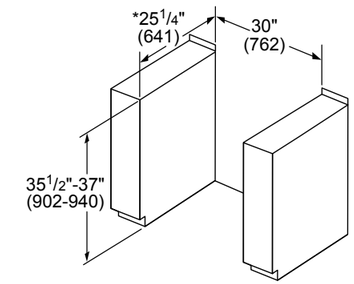

*For island installation with island trim (HGZIT301), use a cutout depth of 25 3/8" (645)

measurements in inches (mm)

Gas Range Installation

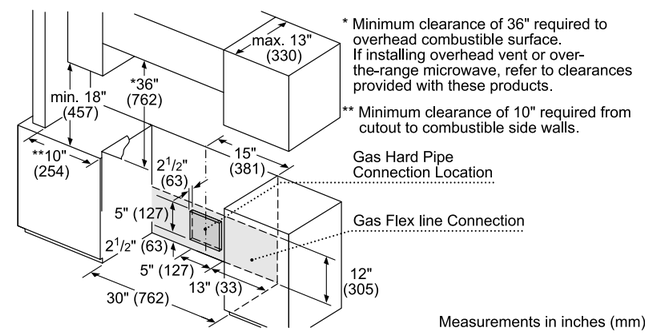

Measurements in inches (mm)

Island Trim – Gas Range

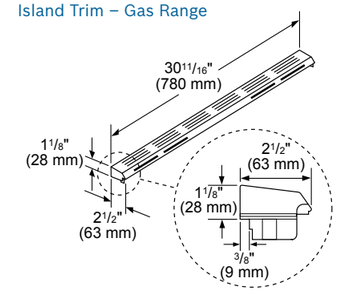

Measurements in inches

Optional Accessories

HEZTR301
30" Telescopic Rack

HGZBS301
4" Low Backguard, Gas

HEZGR301
Griddle

HEZ298102
Wok Ring

HGZIT301
Island Trim for Island Applications, Gas

800 Series Induction & Electric Slide-in Ranges

HII8055U (Induction)

- Full-Depth Slide-in Range
- Innovative Induction Technology Offers Precise, Fast and Efficient Cooking
- AutoChef®
- SpeedBoost®
- Temperature Probe
- Warming Drawer
- 4.6 cu. ft.

HEI8054U

- Full-Depth Slide-in Range
- 6" / 9" 3,000-Watt Dual-Ring Element
- 9.5" 3,200- / 1100-Watt Versatile Element
- 4 Elements + 1 Warming Zone
- Warming Drawer
- 4.6 cu. ft.

	Induction	Electric
	Stainless Steel – HII8055U	Stainless Steel – HEI8054U
General Properties		
Cooking modes	Bake, Variable Broil (Hi & Low), Roast, Warm, Proof Dough, Convection Bake, Convection Broil, Convection Roast, Multi-Rack Genuine European Convection, Convection Conversion, Pizza, Temperature Probe, Fast Preheat, Sabbath	Bake, Variable Broil (Hi & Low), Roast, Warm, Proof Dough, Convection Bake, Convection Broil, Convection Roast, Multi-Rack Genuine European Convection, Convection Conversion, Pizza, Fast Preheat, Sabbath
Cleaning type	Self clean	Self clean
Knob material	N/A	Metal
Interior light	1	1
Kitchen timer	Yes	Yes
Drawer type	Warming drawer	Warming drawer
Oven Performance		
Bake / broil element watts (W)	2,400 / 3,800 W	2,400 / 3,800 W
Convection element watts (W)	2,000 W	2,000 W
Element Performance		
Total number of cooktop elements	4	5
Power of front left element watts (W)	1,400 W (2,200 w/boost)	1,400 / 3,000 W
Power of back left element watts (W)	2,200 W (3,700 w/boost)	1,200 W
Power of center element watts (W)	N/A	100 W
Power of back right element watts (W)	2,600 W (3,700 w/boost)	1,200 W
Power of front right element watts (W)	1,400 W (2,200 w/boost)	1,100 / 3,200 W
Element Size		
Dimension of front left heating element	6"	6" / 9"
Dimension of back left heating element	9"	6"
Dimension of center heating element	N/A	6"
Dimension of back right heating element	11"	6"
Dimension of front right heating element	6"	9.5"
Technical Details		
Watts (W)	11,700 / 14,000 W	11,300 / 14,800 W
Circuit breaker (A)	40 A	40 A
Volts (V); Frequency (Hz)	208 V / 240 V; 60 Hz	208 V / 240 V; 60 Hz
Plug type / Cord length (in.)	N/A / N/A	N/A / N/A
Energy source	Electric	Electric
Dimensions & Weight		
Overall appliance dimensions (HxWxD) (in.)	35 1/2" – 37" x 31 1/2" x 28 7/8"	35 1/2" – 37" x 31 1/2" x 28 7/8"
Required cutout size (HxWxD) (in.)	35 1/2" – 37" x 30" x 25"	35 1/2" – 37" x 30" x 25"
Adjustable range height (in.)	1 1/2"	1 1/2"
Oven cavity size (cu. ft.)	4.6	4.6
Overall oven interior dimensions (HxWxD) (in.)	17 13/16" x 24 1/8" x 18"	17 13/16" x 24 1/8" x 18"
Usable oven interior dimensions (HxWxD) (in.)	12 5/16" x 23 1/4" x 15 1/4"	12 5/16" x 23 1/4" x 15 1/4"
Net weight (lbs)	248 lbs	248 lbs
Accessories – Included		
Included	Use and care manual, installation guide, temperature probe, 3 standard racks	Use and care manual, installation guide, 3 standard racks

800 Series Induction & Electric Slide-in Ranges

Induction & Electric Range Dimensions

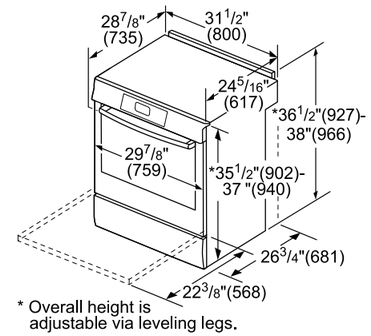

Induction & Electric Range Cutout Dimensions

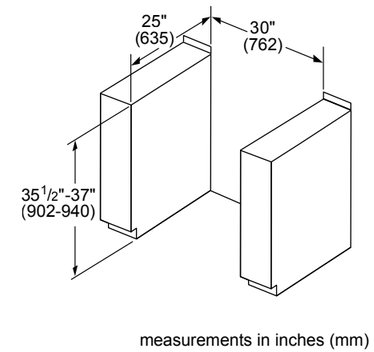

Induction & Electric Range Installation

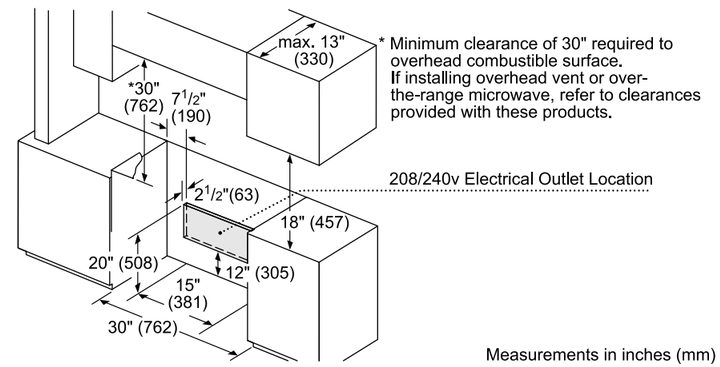

* Minimum clearance of 30" required to overhead combustible surface. If installing overhead vent or over-the-range microwave, refer to clearances provided with these products.

Optional Accessories

HEZTR301
30" Telescopic Rack

HEZBS301
4" Low Backguard, Electric And Induction

HEZ390210
8" AutoChef® Pan for 6" Element

HEZ390220
9" AutoChef® Pan for 7" Element

HEZ390230
10" AutoChef® Pan for 8" and 9" Elements

800 Series Dual-Fuel Slide-in Range

HDI8054U (Dual-Fuel)

- Full-Depth Slide-in Range
- 18,000 BTU Burner
- 5 Burners
- Multi-Rack Genuine European Convection
- Temperature Probe
- Warming Drawer
- 4.6 cu. ft.

	Dual-Fuel
	Stainless Steel – HDI8054U
General Properties	
Cooking modes	Bake, Variable Broil (Hi & Low), Roast, Warm, Proof Dough, Convection Bake, Convection Broil, Convection Roast, Multi-Rack Genuine European Convection, Convection Conversion, Pizza, Temperature Probe, Fast Preheat, Sabbath
Cleaning type	Self clean
Type of grate	Cast iron
Knob material	Metal
Interior light	1
Kitchen timer	Yes
Drawer type	Warming drawer
Sealed burners	Yes
Oven Performance	
Bake / broil element watts (W)	2,400 / 3,800 W
Convection element watts (W)	2,000 W
Burner Performance	
Total number of cooktop burners	5
Total cooktop (NG / LP) BTU	53,000 / 44,000
Power of front left burner (NG / LP) BTU	10,000 / 8,000
Power of back left burner (NG / LP) BTU	5,000 / 5,000
Power of center burner (NG / LP) BTU	18,000 / 12,500
Power of back right burner (NG / LP) BTU	5,000 / 5,000
Power of front right burner (NG / LP) BTU	15,000 / 13,500
Technical Details	
Watts (W)	4,800 / 6,400 W
Circuit breaker (A)	30 A
Volts (V)	208 V / 240 V
Frequency (Hz)	60 Hz
Plug type / Cord length (in.)	N/A / N/A
Energy source	Mixed electric / gas
Gas type	Natural gas 15 mbar (USA)
Alternative gas type	LP 27, 5 mbar (USA)
Dimensions & Weight	
Overall appliance dimensions (HxWxD) (in.)	36 1/2" – 37" x 31 1/2" x 29 1/6"
Required cutout size (HxWxD) (in.)	35 1/2" – 37" x 30" x 25 1/8"
Adjustable range height (in.)	1 1/2"
Oven cavity size (cu. ft.)	4.6
Overall oven interior dimensions (HxWxD) (in.)	17 13/16" x 24 1/8" x 18"
Usable oven interior dimensions (HxWxD) (in.)	12 5/16" x 23 1/4" x 15 1/4"
Net weight (lbs)	243 lbs
Accessories – Included	
Included	Use and care manual, installation guide, temperature probe, LP conversion kit, 3 standard racks

800 Series Dual-Fuel Slide-in Range

Dual-Fuel Range Dimensions

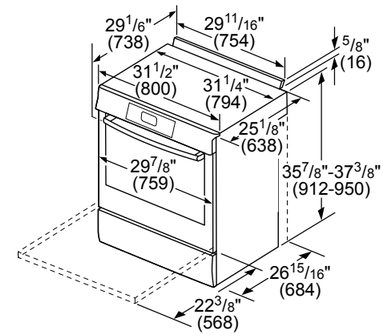

measurements in inches (mm)

Dual-Fuel Cutout Dimensions

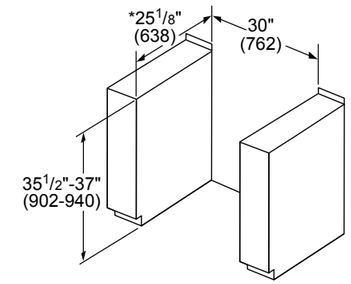

measurements in inches (mm)

Dual-Fuel Range Installation

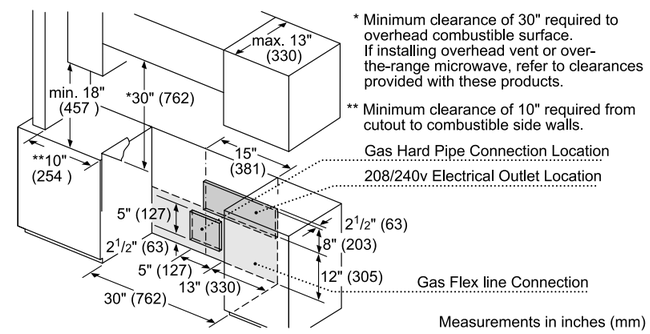

Measurements in inches (mm)

Island Trim – Dual-Fuel Range

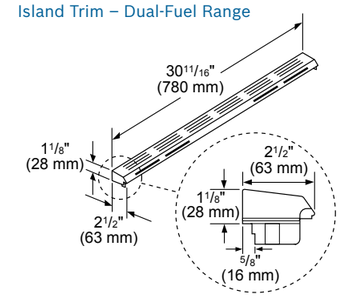

Measurements in inches

Optional Accessories

HEZTR301
30" Telescopic Rack

HDZBS301
4" Low Backguard, Dual-Fuel

HEZGR301
Griddle

HEZ298102
Wok Ring

HDZIT301
Island Trim for Island Applications, Dual-Fuel

800 Series Gas Slide-in Range

HGI8054UC (Gas)

- Full-Depth Slide-in Range
- 18,000 BTU Burner
- 5 Burners
- Warming Drawer
- 4.8 cu. ft.

	Gas
	Stainless Steel – HGI8054UC
General Properties	
Cooking modes	Bake, Variable Broil (Hi & Low), Roast, Warm, Proof Dough, Convection Bake, Convection Roast, Convection Conversion, Pizza, Sabbath
Cleaning type	Self clean
Type of grate	Cast iron
Knob material	Metal
Interior light	1
Kitchen timer	Yes
Drawer type	Warming drawer
Sealed burners	Yes
Oven Performance	
Bake / broil burner power BTU	18,000 / 12,500 BTU
Burner Performance	
Total number of cooktop burners	5
Total cooktop (NG / LP) BTU	53,000 / 46,500
Power of front left burner (NG / LP) BTU	10,000 / 8,000
Power of back left burner (NG / LP) BTU	5,000 / 5,000
Power of center burner (NG / LP) BTU	18,000 / 15,000
Power of back right burner (NG / LP) BTU	5,000 / 5,000
Power of front right burner (NG / LP) BTU	15,000 / 13,500
Technical Details	
Circuit breaker (A)	15 A
Volts (V)	120 V
Frequency (Hz)	60 Hz
Plug type	US 3-prong
Cord length (in.)	78"
Energy source	Gas
Gas type	Natural gas 15 mbar (USA)
Alternative gas type	LP 27, 5 mbar (USA)
Dimensions & Weight	
Overall appliance dimensions (HxWxD) (in.)	36 1/2" – 37" x 31 1/2" x 29 3/16"
Required cutout size (HxWxD) (in.)	35 1/2" – 37" x 30" x 25 1/4"
Adjustable range height (in.)	1 1/2"
Oven cavity size (cu. ft.)	4.8
Overall oven interior dimensions (HxWxD) (in.)	17 13/16" x 24 1/8" x 18"
Usable oven interior dimensions (HxWxD) (in.)	11 1/2" x 23 1/4" x 15 1/4"
Net weight (lbs)	243 lbs
Accessories – Included	
Included	Use and care manual, installation guide, LP conversion kit, 3 standard racks

800 Series Gas Slide-in Range

Gas Range Dimensions

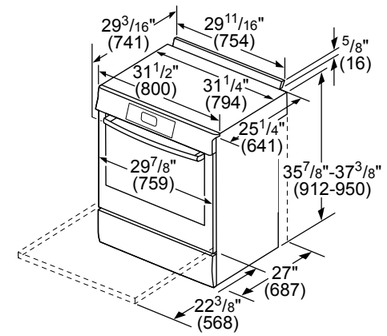

measurements in inches (mm)

Gas Cutout Dimensions

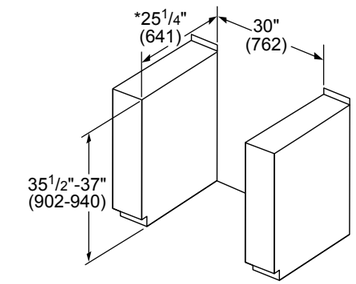

*For island installation with island trim (HGZIT301), use a cutout depth of 25 3/8" (645)

measurements in inches (mm)

Gas Range Installation

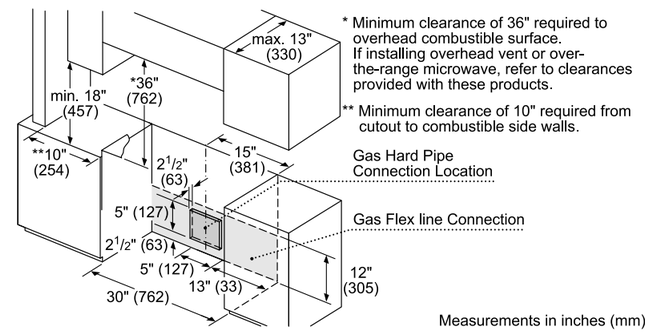

Measurements in inches (mm)

Island Trim – Gas Range

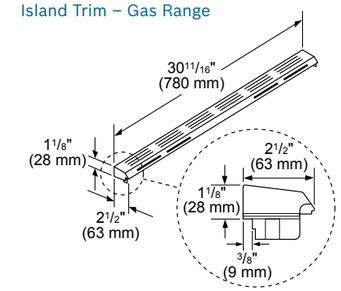

Measurements in inches

Optional Accessories

HEZTR301
30" Telescopic Rack

HGZBS301
4" Low Backguard, Gas

HEZGR301
Griddle

HEZ298102
Wok Ring

HGZIT301
Island Trim for Island Applications, Gas

Ventilation

Bosch's inventive ventilation systems keep mealtime fresh by quietly purifying the air while you cook. They're beautifully designed to seamlessly integrate into any kitchen with under-the-cabinet, chimney, island, pull-out and downdraft styles. These easy-to-clean ventilation systems come with automated features to make maintenance and operation a breeze. You'll breathe easier knowing that smoke, steam, grease and odors are quietly and effectively taken care of.

Benchmark® Series Ventilation

Modern design

Sculpted in steel and glass, our Benchmark® Series wall mounted chimney hoods add style and sophistication to the kitchen. No matter your needs, Bosch has an elegant solution.

Quiet

The Benchmark® Series glass canopy chimney hood is only 2.5 sones at the lowest setting, so you can enjoy peaceful cooking with no distracting noise.

Powerful ventilation

With 600 CFM of power, our Benchmark® Series glass canopy chimney wall hood meets the ventilation requirements of any Bosch cooktop or range, and can convert to recirculation for installations that are hard to duct or for areas with make up air restrictions. These highly effective vents quickly clear the air of grease, steam, smoke, and odor.

Ventilation Selection Guide

✓ = Design Match

✓ = Viable Option

	Cooktops				Cooktops		Slide-in Ranges			
	24-Inch Electric	30-Inch Electric & Induction	36-Inch Electric & Induction	24-Inch Gas	30-Inch Gas	36-Inch Gas	Induction	Electric	Dual-Fuel	Gas
Chimney Wall Hoods										
24-Inch HCP34E52UC	✓			✓						
30-Inch HCP30E52UC	✓	✓		✓	✓		✓	✓	✓	✓
30-Inch HCP30651UC		✓			✓		✓	✓	✓	✓
30-Inch HCP80641UC		✓			✓		✓	✓	✓	✓
30-Inch HCB50651UC		✓			✓		✓	✓	✓	✓
36-Inch HCG56651UC		✓	✓		✓	✓	✓	✓	✓	✓
36-Inch HCP36E52UC		✓	✓		✓	✓	✓	✓	✓	✓
36-Inch HCP36651UC		✓	✓		✓	✓	✓	✓	✓	✓
36-Inch HCB56651UC		✓	✓		✓	✓	✓	✓	✓	✓
Under-Cabinet Range Hoods										
30-Inch DUH30152UC	✓	✓		✓	✓		✓	✓	✓	✓
30-Inch DUH30252UC		✓			✓		✓	✓	✓	✓
30-Inch DPH30652UC		✓			✓		✓	✓	✓	✓
36-Inch DUH36152UC		✓	✓		✓	✓	✓	✓	✓	✓
36-Inch DUH36252UC		✓	✓		✓	✓	✓	✓	✓	✓
36-Inch DPH36652UC		✓	✓		✓	✓	✓	✓	✓	✓
Island Hood										
42-Inch HIB82651UC		✓	✓		✓	✓	✓	✓	✓	✓
Custom Insert Hoods										
21-Inch HUI31451UC	✓			✓						
29-Inch DHL755BUC	✓	✓		✓	✓		✓	✓	✓	✓
Downdrafts										
30-Inch HDD80050UC		✓			✓					
36-Inch HDD86050UC			✓			✓				
Pull-Out Hoods										
24-Inch HUI54451UC	✓			✓						
30-Inch HUI50351UC	✓	✓		✓	✓		✓	✓	✓	✓
36-Inch HUI56551UC		✓	✓		✓	✓	✓	✓	✓	✓

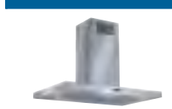

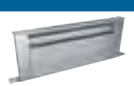

Benchmark® Series Chimney Wall Hood

36" Benchmark® Series
Glass Canopy Chimney Hood
HCG56651UC

- 600 CFM
- 2 Halogen Lights
- Stainless Steel Filters with Metal Latch
- 9 ft.–11.5 ft. Duct Cover Extension Accessory

	36" Glass Canopy Chimney Hood
	Stainless Steel – HCG56651UC
General Properties	
Operating mode	Convertible: ducted / recirculating
Maximum CFM	600 CFM
Sones	10.13 HS / 2.46 WS
Number of speed settings	4-stage
Motor location	Integrated motor in hood chimney
Number of lights	2
Bulb type	Halogen
Total power of the lamps (W)	80 W
Damper included	Yes
Grease filter material	Washable stainless steel
Grease filter type	Multilayer cassette
Technical Details	
Volts (V)	120 V
Frequency (Hz)	60 Hz
Plug type	No plug
Dimensions & Weight	
Overall appliance dimensions (width of canopy included) (HxWxD) (in.)	27 7/16" x 42 3/8" / 27 7/16" x 46 5/16" / 35 7/8" x 19 11/16"
Height of the chimney (in.)	25 7/8" x 40 13/16" / 25 7/8" x 44 3/4"
Required distance above cooktop / range cooking surface	24" electric / 30" gas
Diameter of air duct (in.) top	8"
Net weight (lbs)	54 lbs

Optional Accessories

HCGEXT5UC
Chimney Extension for 9–11.5 ft. Ceilings for Use with HCG56651UC

HCIFILTUC
Filter Kit

HCREC5UC
Recirculation Kit for HCG56651UC

Benchmark® Series Chimney Wall Hood

36" Glass Canopy Chimney Hood

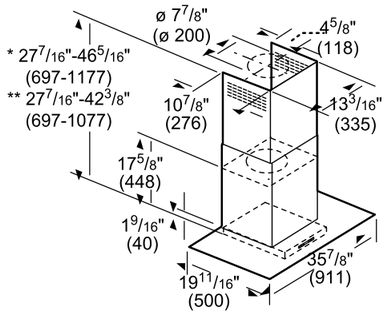

* Recirculating installation
** Ducted installation

Installation height above cooking surface:
24"-34" (610 mm-864 mm) to Electric
27"-34" (686 mm-864 mm) to Gas.

measurements in inches (mm)

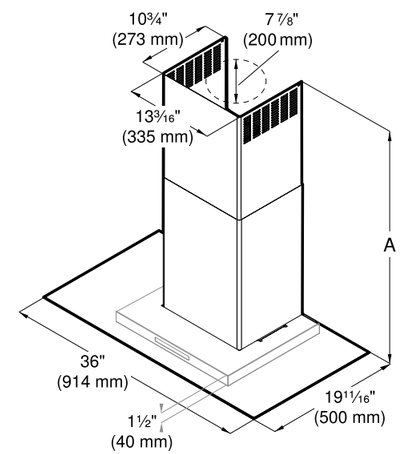

A Ducted operation:
Min. / Max. 27 7/16" (697 mm) / 42 3/8" (1076 mm)
Recirculation mode:
Min. / Max. 27 7/16" (697 mm) / 46 5/16" (1176 mm)

measurements in inches (mm)

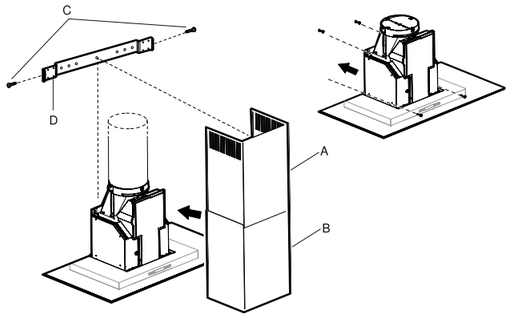

A	Upper flue duct
B	Lower flue duct
C	Screws
D	Angle bracket

300 Series Pyramid Canopy Chimney Hoods

24" 300 Series
Pyramid Canopy Chimney Hood
HCP34E52UC

- 300 CFM
- ENERGY STAR® Qualified
- 2 LED Lights
- Aluminum Mesh Filters
- 9 ft.–11.5 ft. Duct Cover Extension Accessory

30" 300 Series
Pyramid Canopy Chimney Hood
HCP30E52UC

- 300 CFM
- ENERGY STAR® Qualified
- 2 LED Lights
- Aluminum Mesh Filters
- 9 ft.–11.5 ft. Duct Cover Extension Accessory

30" 300 Series
Pyramid Canopy Chimney Hood
HCP30651UC

+ 600 CFM
+ 2 Halogen Lights
- Aluminum Mesh Filters
- 9 ft.–11.5 ft. Duct Cover Extension Accessory

+ Indicates a step-up feature

	24" Pyramid Canopy	30" Pyramid Canopy	30" Pyramid Canopy
	Stainless Steel – HCP34E52UC	Stainless Steel – HCP30E52UC	Stainless Steel – HCP30651UC
General Properties			
Operating mode	Convertible: ducted / recirculating	Convertible: ducted / recirculating	Convertible: ducted / recirculating
Maximum CFM	300 CFM	300 CFM	600 CFM
Sones	5.36 HS / 1.56 WS	5.36 HS / 1.56 WS	9.9 HS / 4.56 WS
Number of speed settings	3-stage	3-stage	4-stage
Motor location	Integrated motor in hood chimney	Integrated motor in hood chimney	Integrated motor in hood chimney
Number of lights	2	2	2
Bulb type	LED	LED	Halogen
Total power of the lamps (W)	13 W	13 W	80 W
Damper included	Yes	Yes	Yes
Grease filter material	Aluminum	Aluminum	Aluminum
Grease filter type	Multilayer cassette	Multilayer cassette	Multilayer cassette
Technical Details			
Volts (V)	120 V	120 V	120 V
Frequency (Hz)	60 Hz	60 Hz	60 Hz
Plug type	No plug	No plug	No plug
Dimensions & Weight			
Overall appliance dimensions (width of canopy included) (HxWxD) (in.)	24 9/16" – 38 7/8" / 28 1/4" – 42 9/16" x 24" x 19 11/16"	24 9/16" – 38 7/8" / 28 1/4" – 42 9/16" x 30" x 19 11/16"	24 9/16" – 38 7/8" / 28 1/4" – 42 9/16" x 30" x 19 11/16"
Height of the chimney (in.)	19 9/16" – 33 7/8" / 23 1/4" – 42 9/16"	19 9/16" – 33 7/8" / 23 1/4" – 42 9/16"	19 9/16" – 33 7/8" / 23 1/4" – 42 9/16"
Required distance above cooktop / range cooking surface	24" electric / 30" gas	24" electric / 30" gas	24" electric / 30" gas
Diameter of air duct (in.) top	8"	8"	8"
Net weight (lbs)	49 lbs	49 lbs	49 lbs

Optional Accessories

HCPEXT5UC
Chimney extension for 9–11.5 ft. ceilings

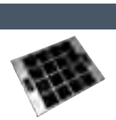

HCIFILTUC
Filter Kit

HCREC5UC
Recirculation Kit

300 Series Pyramid Canopy Chimney Hoods

24" Pyramid Canopy Chimney Hood

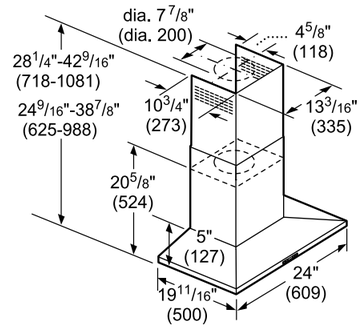

* Recirculating installation
** Installation with exhaust air duct

measurements in inches (mm)

Installation height above cooking surface:
24"-34" (610 mm-864 mm) for electric
27"-34" (686 mm-864 mm) for gas

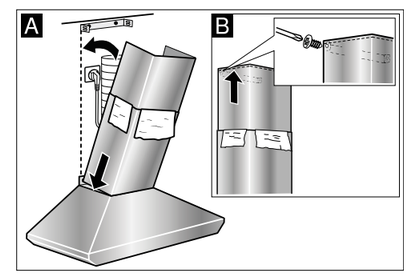

A	Lower flue duct
B	Upper flue duct

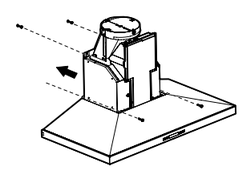

30" Pyramid Canopy Chimney Hood

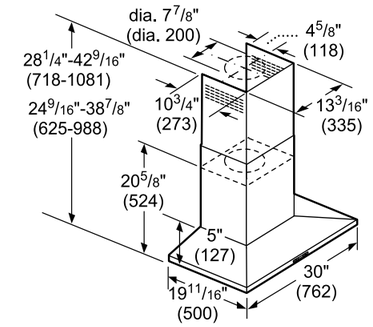

* Recirculating installation
** Installation with exhaust air duct

measurements in inches (mm)

Installation height above cooking surface:
24"-34" (610 mm-864 mm) for electric
27"-34" (686 mm-864 mm) for gas

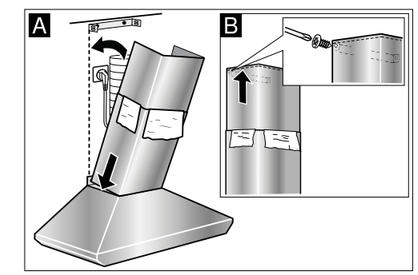

A	Lower flue duct
B	Upper flue duct

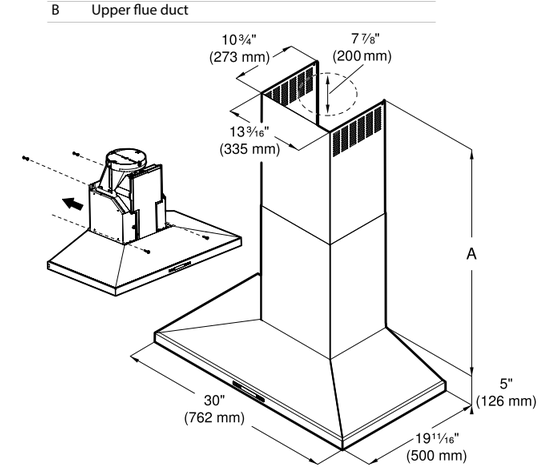

A Ducted operation:
Min. / Max. 24 9/16" (624 mm) / 38 7/8" (985 mm)
Recirculation mode:
Min. / Max. 28 1/4" (716 mm) / 42 9/16" (1081 mm)
measurements in inches (mm)

500 / 800 Series 30" Chimney Wall Hoods

30" 500 Series
Box Canopy Chimney Hood
HCB50651UC

- +600 CFM
- +2 Halogen Lights
- +Stainless Steel Filters with Metal Latch
- • 9 ft.–11.5 ft. Duct Cover Extension Accessory

30" 800 Series
Pyramid Canopy Chimney Hood
HCP80641UC

- +600 CFM
- +2 Halogen Lights
- +Aluminum Mesh Filters
- • 9 ft.–11.5 ft. Duct Cover Extension Accessory
- • Black Stainless Steel Helps Guard Against Scratches and Fingerprints

+Indicates a step-up feature

	30" Box Canopy 500 Series	30" Pyramid Canopy 800 Series
	Stainless Steel – HCB50651UC	Black Stainless Steel – HCP80641UC
General Properties		
Operating mode	Convertible: ducted / recirculating	Convertible: ducted / recirculating
Maximum CFM	600 CFM	600 CFM
Sones	9.9 HS / 4.56 WS	9.9 HS / 4.56 WS
Number of speed settings	4-stage	4-stage
Motor location	Integrated motor in hood chimney	Integrated motor in hood chimney
Number of lights	2	2
Bulb type	Halogen	Halogen
Total power of the lamps (W)	80 W	80 W
Damper included	Yes	Yes
Grease filter material	Washable stainless steel	Aluminum
Grease filter type	Multilayer cassette	Multilayer cassette
Technical Details		
Volts (V)	120 V	120 V
Frequency (Hz)	60 Hz	60 Hz
Plug type	No plug	No plug
Dimensions & Weight		
Overall appliance dimensions (width of canopy included) (HxWxD) (in.)	27 1/16" x 42 1/8" / 27 1/16" x 45 13/16" / 30" x 19 11/16"	24 9/16" – 38 7/8" / 28 1/4" – 42 9/16" x 30" x 19 11/16"
Height of the chimney (in.)	25 1/2" x 40 9/16" / 25 1/2" x 44 1/4"	19 9/16" – 33 7/8" / 23 1/4" – 42 9/16"
Required distance above cooktop / range cooking surface	24" electric / 30" gas	24" electric / 30" gas
Diameter of air duct (in.) top	8"	8"
Net weight (lbs)	54 lbs	49 lbs

Optional Accessories

HCBEXT5UC
Chimney extension for 9–11.5 ft. ceilings for use with HCB50651UC

HCPEXT4UC
Chimney extension for 9–11.5 ft. ceilings for use with HCP80641UC

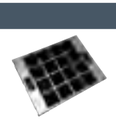

HCIFILTUC
Filter Kit

HCREC5UC
Recirculation Kit

500 / 800 Series 30" Chimney Wall Hoods

HCB50651UC
Box Canopy Chimney Hood

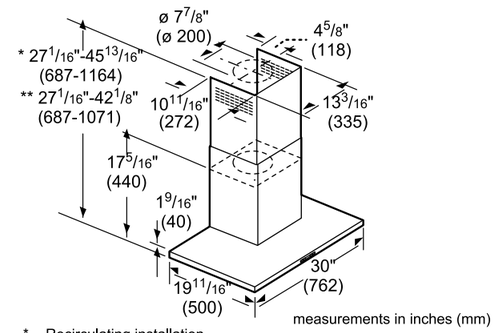

* Recirculating installation
** Ducted installation

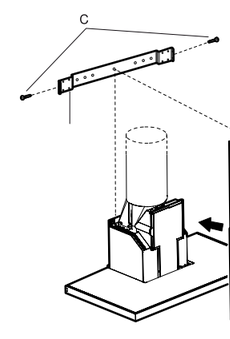

A	Upper flue duct
B	Lower flue duct
C	Screws
D	Angle bracket

HCP80641UC
Pyramid Canopy Chimney Hood

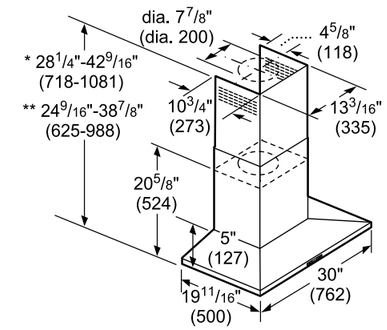

* Recirculating installation
** Installation with exhaust air duct measurements in inches (mm)

Installation height above cooking surface:
24"-34" (610 mm-864 mm) for electric
27"-34" (686 mm-864 mm) for gas

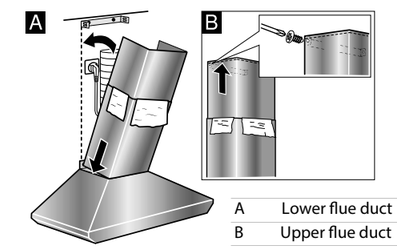

A	Lower flue duct
B	Upper flue duct

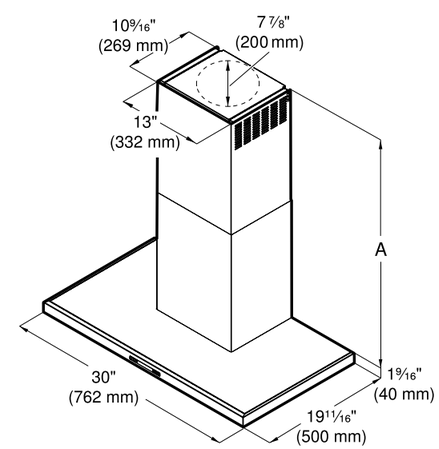

A Ducted operation:
Min. / Max. 27 1/16" (687 mm) / 42 1/8" (1070 mm)
Recirculation mode:
Min. / Max. 27 1/16" (687 mm) / 45 13/16" (1164 mm)

measurements in inches (mm)

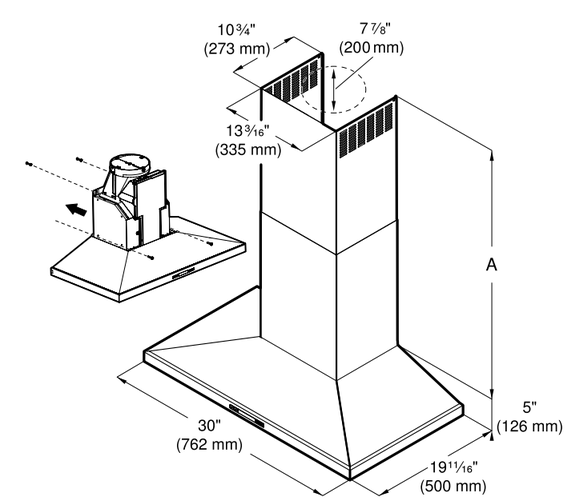

A Ducted operation:
Min. / Max. 24 9/16" (624 mm) / 38 7/8" (985 mm)
Recirculation mode:
Min. / Max. 28 1/4" (716 mm) / 42 9/16" (1081 mm)

measurements in inches (mm)

300 / 500 Series 36" Chimney Wall Hoods

36" 300 Series
Pyramid Canopy Chimney Hood
HCP36E52UC

- 300 CFM
- ENERGY STAR® Qualified
- 2 LED Lights
- Aluminum Mesh Filters
- 9 ft.–11.5 ft. Duct Cover Extension Accessory

36" 300 Series
Pyramid Canopy Chimney Hood
HCP36651UC

+ 600 CFM
+ 2 Halogen Lights
- Aluminum Mesh Filters
- 9 ft.–11.5 ft. Duct Cover Extension Accessory

36" 500 Series
Box Canopy Chimney Hood
HCB56651UC

+ 600 CFM
+ 2 Halogen Lights
+ Stainless Steel Filters with Metal Latch
- 9 ft.–11.5 ft. Duct Cover Extension Accessory

+ Indicates a step-up feature

	36" Pyramid Canopy 300 Series	36" Pyramid Canopy 300 Series	36" Box Canopy 500 Series
	Stainless Steel – HCP36E52UC	Stainless Steel – HCP36651UC	Stainless Steel – HCB56651UC
General Properties			
Operating mode	Convertible: ducted / recirculating	Convertible: ducted / recirculating	Convertible: ducted / recirculating
Maximum CFM	300 CFM	600 CFM	600 CFM
Sones	5.36 HS / 1.56 WS	9.9 HS / 4.56 WS	9.9 HS / 4.56 WS
Number of speed settings	3-stage	4-stage	4-stage
Motor location	Integrated motor in hood chimney	Integrated motor in hood chimney	Integrated motor in hood chimney
Number of lights	2	2	2
Bulb type	LED	Halogen	Halogen
Total power of the lamps (W)	13 W	80 W	80 W
Damper included	Yes	Yes	Yes
Grease filter material	Aluminum	Aluminum	Washable stainless steel
Grease filter type	Multilayer cassette	Multilayer cassette	Multilayer cassette
Technical Details			
Volts (V)	120 V	120 V	120 V
Frequency (Hz)	60 Hz	60 Hz	60 Hz
Plug type	No plug	No plug	No plug
Dimensions & Weight			
Overall appliance dimensions (width of canopy included) (HxWxD) (in.)	24 9/16" – 38 7/8" / 28 1/4" – 42 9/16" x 36" x 19 11/16"	24 9/16" – 38 7/8" / 28 1/4" – 42 9/16" x 36" x 19 11/16"	27 1/16" x 42 1/8" / 27 1/16" x 45 13/16" / 36" x 19 11/16"
Height of the chimney (in.)	19 9/16" – 33 7/8" / 23 1/4" – 42 9/16"	19 9/16" – 33 7/8" / 23 1/4" – 42 9/16"	25 1/2" x 40 9/16" / 25 1/2" x 44 1/4"
Required distance above cooktop / range cooking surface	24" electric / 30" gas	24" electric / 30" gas	24" electric / 30" gas
Diameter of air duct (in.) top	8"	8"	8"
Net weight (lbs)	53 lbs	53 lbs	54 lbs

Optional Accessories

HCPEXT5UC
Chimney Extension for 9–11.5 ft. Ceilings for Use with HCP36E52UC and HCP36651UC

HCBEXT5UC
Chimney Extension for 9–11.5 ft. Ceilings for Use with HCB56651UC

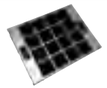

HCIFILTUC
Filter Kit

HCREC5UC
Recirculation Kit

300 / 500 Series 36" Chimney Wall Hoods

36" Pyramid Canopy Chimney Hood

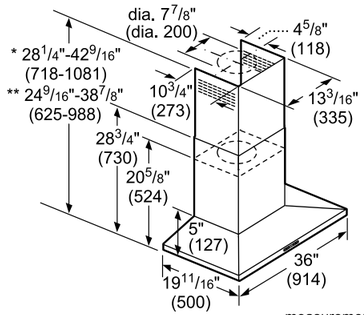

measurements in inches (mm)

* Recirculating installation
** Installation with exhaust air duct

Installation height above cooking surface:
24"-34" (610 mm-864 mm) for electric
27"-34" (686 mm-864 mm) for gas

36" Box Canopy Chimney Hood

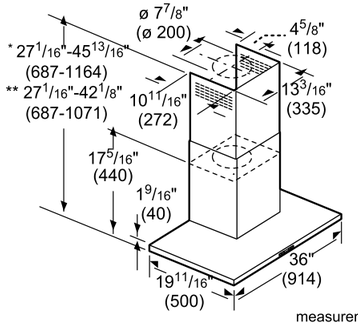

measurements in inches (mm)

* Recirculating installation
** Ducted installation

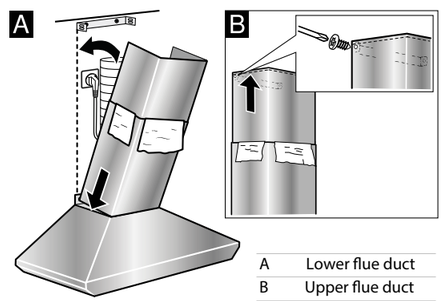

A	Lower flue duct
B	Upper flue duct

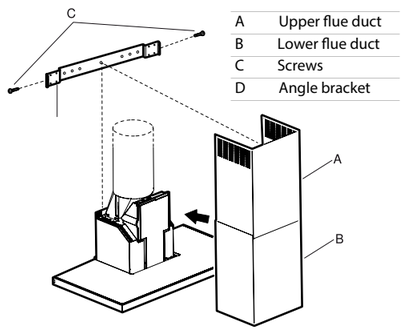

A	Upper flue duct
B	Lower flue duct
C	Screws
D	Angle bracket

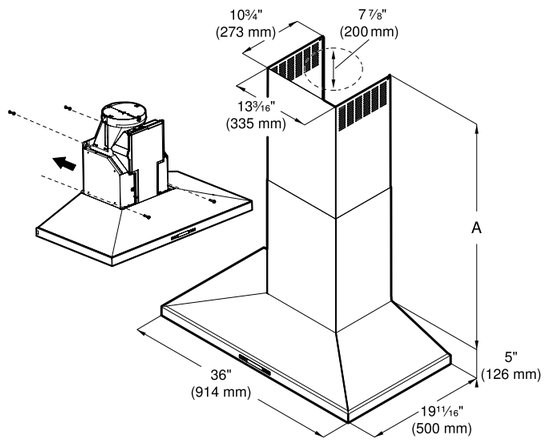

A Ducted operation:
Min. / Max. 24 9/16" (624 mm) / 38 7/8" (985 mm)
Recirculation mode:
Min. / Max. 28 1/4" (716 mm) / 42 9/16" (1081 mm)

measurements in inches (mm)

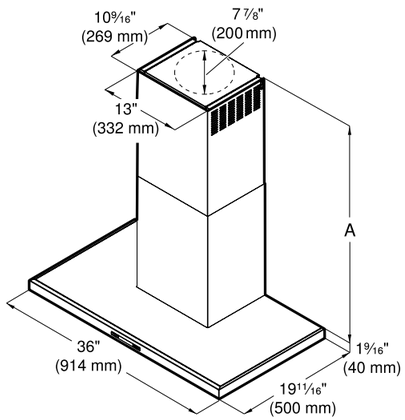

A Ducted operation:
Min. / Max. 27 1/16" (687 mm) / 42 1/8" (1070 mm)
Recirculation mode:
Min. / Max. 27 1/16" (687 mm) / 45 13/16" (1164 mm)

measurements in inches (mm)

800 Series Island Hood

42" 800 Series
Box Canopy Island Hood
HIB82651UC

- 600 CFM
- 4 Halogen Lights
- Stainless Steel Filters with Metal Latch
- 9 ft.–11.5 ft. Duct Cover Extension Accessory

	42" Box Canopy Island Hood
	Stainless Steel – HIB82651UC
General Properties	
Operating mode	Convertible: ducted / recirculating
Maximum CFM	600 CFM
Sones	9.9 HS / 4.56 WS
Number of speed settings	4-stage
Motor location	Integrated motor in hood chimney
Number of lights	4
Bulb type	Halogen
Total power of the lamps (W)	80 W
Damper included	Yes
Grease filter material	Washable stainless steel
Grease filter type	Multilayer cassette
Technical Details	
Volts (V)	120 V
Frequency (Hz)	60 Hz
Plug type	No plug
Dimensions & Weight	
Overall appliance dimensions (width of canopy included) (HxWxD) (in.)	29 13/16" – 45 5/16" / 29 13/16" – 50 5/16" x 42 1/16" x 27"
Height of the chimney (in.)	27 7/16" – 42 7/8" / 27 7/16" – 47 7/8"
Required distance above cooktop / range cooking surface	24" electric / 30" gas
Diameter of air duct (in.) top	8"
Net weight (lbs)	110 lbs

Optional Accessories

HCIEXT5UC
Chimney extension for 9–11.5 ft. ceilings for use with HIB82651UC

HCIFILTUC
Filter kit

HIREC5UC
Recirculation kit for HIB82651UC

800 Series Island Hood

42" Box Canopy Island Hood

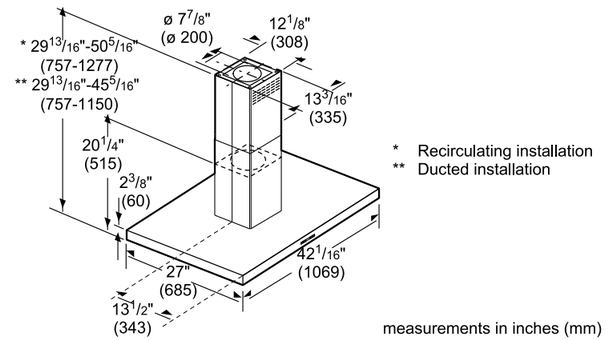

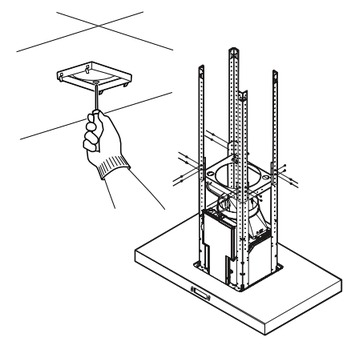

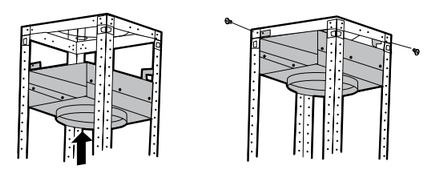

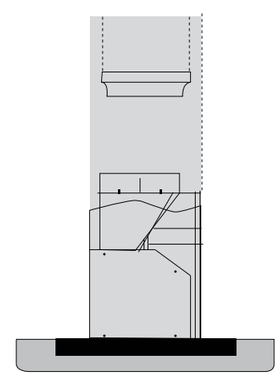

500 Series Pull-Out Hoods

24" 500 Series
Pull-Out Hood
HUI54451UC

- 400 CFM
- Electronic Control
- 2 Halogen Lights
- Convertible: Ducted / Recirculating

30" 500 Series
Pull-Out Hood
HUI50351UC

- 300 CFM
- Electronic Control
- 2 Halogen Lights
- Convertible: Ducted / Recirculating

36" 500 Series
Pull-Out Hood
HUI56551UC

+ 500 CFM
- Electronic Control
- 2 Halogen Lights
- Convertible: Ducted / Recirculating

+ Indicates a step-up feature

	24"	30"	36"
	Stainless Steel – HUI54451UC	Stainless Steel – HUI50351UC	Stainless Steel – HUI56551UC
General Properties			
Operating mode	Convertible: ducted / recirculating	Convertible: ducted / recirculating	Convertible: ducted / recirculating
Maximum CFM	400 CFM	300 CFM	500 CFM
Number of speed settings	4-stage	3-stage	3-stage
Motor location	Integrated motor in hood body	Integrated motor in hood body	Integrated motor in hood body
Number of lights	2	2	2
Bulb type	Halogen	Halogen	Halogen
Total power of the lamps (W)	40 W	40 W	40 W
Damper included	Yes	Yes	Yes
Grease filter material	Aluminum	Aluminum	Aluminum
Grease filter type	Multilayer cassette	Multilayer cassette	Multilayer cassette
Technical Details			
Volts (V)	120 V	120 V	120 V
Frequency (Hz)	60 Hz	60 Hz	60 Hz
Plug type	120V-3 Prong	No plug	No plug
Power cord length (in.)	45 1/2"	50"	50"
Dimensions & Weight			
Overall appliance dimensions (width of canopy included) (HxWxD) (in.)	11 13/16" x 23 9/16" x 11 13/16"	11 9/16" x 29 7/8" x 11"	11 9/16" x 35 7/8" x 11"
Required distance above cooktop / range cooking surface	24"-34" electric / 29 1/2"-34" gas	24"-34" electric / 29 1/2"-34" gas	24"-34" electric / 29 1/2"-34" gas
Diameter of air duct (in.) top	6"	6"	6"
Diameter of air duct (in.) back	N/A	6"	6"
Net weight (lbs)	24 lbs	26 lbs	32.5 lbs

Optional Accessories

HVREC5UC
Recirculation kit for use with HUI54451UC

HUIF06UC
Recirculation kit for use with HUI50351UC and HUI56551UC

HUIRED56UC
CFM reducer kit for use with HUI56551UC; Reduces CFM to under 300

500 Series Pull-Out Hoods

24" Pull-Out Hood

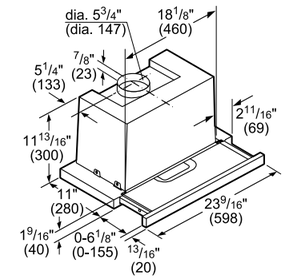

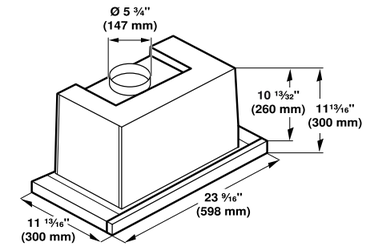

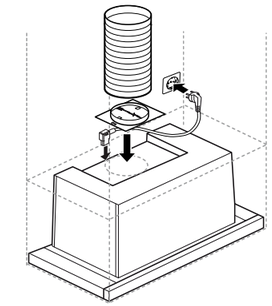

Installation height above cooking surface:
24"-34" (610-864) to Electric
29 1/2"-34" (750-864) to Gas.

measurements in inches (mm)

30" Pull-Out Hood

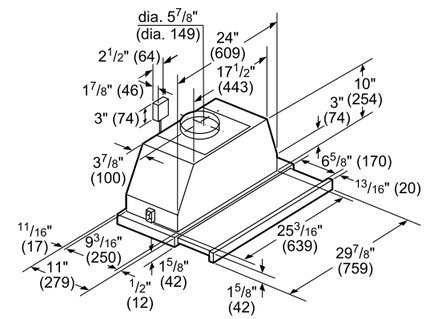

Installation height above cooking surface:
24"-34" (610-864) to Electric
29 1/2"-34" (750-864) to Gas

measurements in inches (mm)

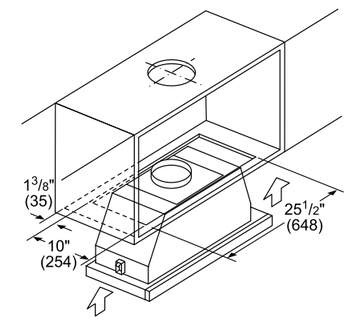

measurements in inches (mm)

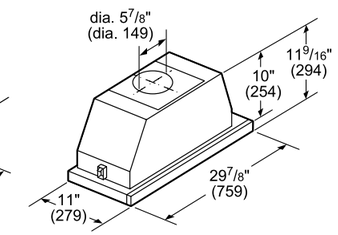

measurements in inches (mm)

36" Pull-Out Hood

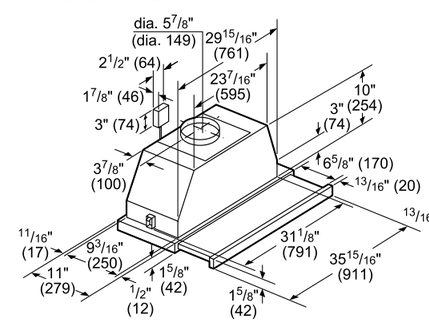

Installation height above cooking surface:
24"-34" (610-864) to Electric
29 1/2"-34" (750-864) to Gas

measurements in inches (mm)

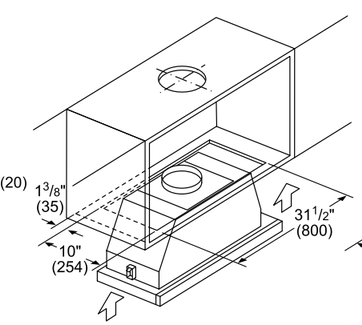

measurements in inches (mm)

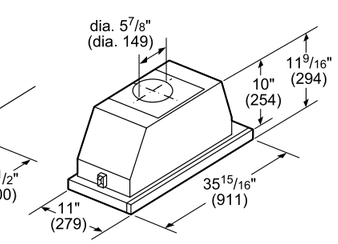

measurements in inches (mm)

300 / 500 / 800 Series 30" Under-Cabinet Wall Hoods

30" 300 Series
Under-Cabinet Wall Hood
DUH30152UC

- 280 CFM
- Incandescent Lights
- Aluminum Mesh Filters
- Three Power Levels

30" 500 Series
Under-Cabinet Wall Hood
DUH30252UC

+400 CFM
+Halogen Lights (Not Included)
- Aluminum Mesh Filters
+Four Power Levels

30" 800 Series
Under-Cabinet Wall Hood
DPH30652UC

+600 CFM
- Incandescent Lights
- Aluminum Mesh Filters
+Professional Design

+Indicates a step-up feature

	300 Series	500 Series	800 Series
	Stainless Steel – DUH30152UC	Stainless Steel – DUH30252UC	Stainless Steel – DPH30652UC
General Properties			
Operating mode	Convertible: ducted / recirculating	Convertible: ducted / recirculating	Convertible: ducted / recirculating
Maximum CFM	280 CFM	400 CFM	600 CFM
Number of speed settings	3-stage	4-stage	2-stage
Motor location	Integrated motor in hood body	Integrated motor in hood body	Integrated motor in hood body
Number of lights	2	2 (not included)	2
Bulb type	Incandescent	Halogen	Incandescent
Total power of the lamps (W)	80 W	100 W	80 W
Damper included	Yes	Yes	Yes
Grease filter material	Aluminum	Aluminum	Aluminum
Grease filter type	Multilayer cassette	Multilayer cassette	Multilayer cassette
Technical Details			
Watts (W)	N/A	N/A	142 W
Volts (V)	120 V	120 V	120 V
Frequency (Hz)	60 Hz	60 Hz	60 Hz
Plug type	No plug	No plug	No plug
Dimensions & Weight			
Overall appliance dimensions (width of canopy included) (HxWxD) (in.)	5" x 30" x 20"	5" x 30" x 20"	11" x 30" x 23"
Required distance above cooktop / range cooking surface	30" electric / 30" gas	30" electric / 30" gas	30" electric / 30" gas
Diameter of air duct (in.) top	7"	7"	8"
Diameter of air duct (in.) back	3 1/4" x 10" rectangular	3 1/4" x 10" rectangular	8"
Net weight (lbs)	42 lbs	42 lbs	34 lbs

Optional Accessories for 300 and 500 Series Under-Cabinet Hoods

DHZ3002UC
Replacement Charcoal Filter

Optional Accessories for 800 Series Under-Cabinet Hood

DHZ3052UC
Replacement Charcoal Filter

DRZ3052UC
Recirculation Kit Adds 4" Height to Appliance

300 / 500 / 800 Series 30" Under-Cabinet Wall Hoods

300 / 500 Series 30" Under-Cabinet Hoods Dimensions

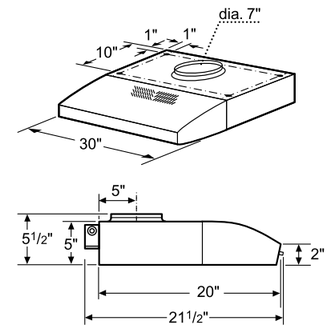

Dimensions in inches

800 Series 30" Under-Cabinet Hood Dimensions

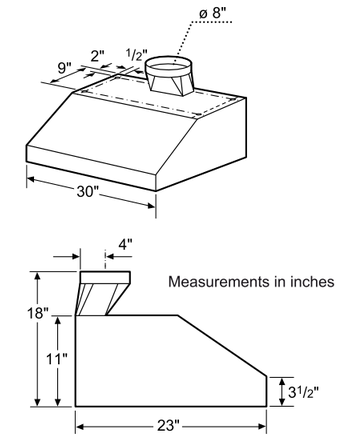

300 / 500 Series 30" Under-Cabinet Hoods Venting

Vertical discharge:
Use a rectangular duct 3 1/4" x 10".....

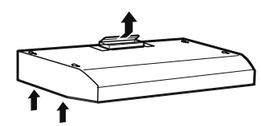

....or use a round 7" duct

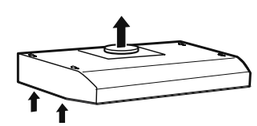

Horizontal discharge:
Use a rectangular duct 3 1/4" x 10"

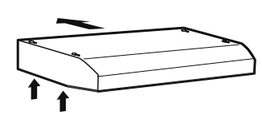

Recirculating (non vented ductless)

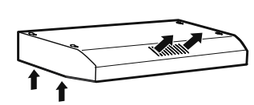

800 Series 30" Under-Cabinet Hood Venting

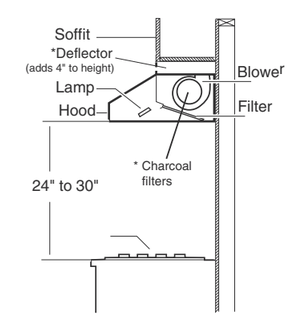

Recirculating
* Optional accessory - Ductless recirculation kit. Adds 4" to height of appliance.

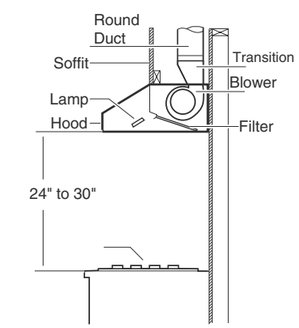

Vertical discharge

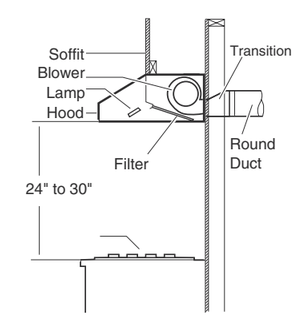

Horizontal discharge

300 / 500 / 800 Series 36" Under-Cabinet Wall Hoods

36" 300 Series
Under-Cabinet Wall Hood
DUH36152UC

- 280 CFM
- Incandescent Lights
- Aluminum Mesh Filters
- Three Power Levels

36" 500 Series
Under-Cabinet Wall Hood
DUH36252UC

+400 CFM
+Halogen Lights (Not Included)
- Aluminum Mesh Filters
+Four Power Levels

36" 800 Series
Under-Cabinet Wall Hood
DPH36652UC

+600 CFM
- Incandescent Lights
- Aluminum Mesh Filters
+Professional Design

+Indicates a step-up feature

	300 Series	500 Series	800 Series
	Stainless Steel – DUH36152UC	Stainless Steel – DUH36252UC	Stainless Steel – DPH36652UC
General Properties			
Operating mode	Convertible: ducted / recirculating	Convertible: ducted / recirculating	Convertible: ducted / recirculating
Maximum CFM	280 CFM	400 CFM	600 CFM
Number of speed settings	3-stage	4-stage	2-stage
Motor location	Integrated motor in hood body	Integrated motor in hood body	Integrated motor in hood body
Number of lights	2	2 (not included)	2
Bulb type	Incandescent	Halogen	Incandescent
Total power of the lamps (W)	80 W	100 W	80 W
Damper included	Yes	Yes	Yes
Grease filter material	Aluminum	Aluminum	Aluminum
Grease filter type	Multilayer cassette	Multilayer cassette	Multilayer cassette
Technical Details			
Watts (W)	N/A	N/A	253 W
Volts (V)	120 V	120 V	120 V
Frequency (Hz)	60 Hz	60 Hz	60 Hz
Plug type	No plug	No plug	No plug
Dimensions & Weight			
Overall appliance dimensions (width of canopy included) (HxWxD) (in.)	5" x 36" x 20"	5" x 36" x 20"	11" x 36" x 23"
Required distance above cooktop / range cooking surface	30" electric / 30" gas	30" electric / 30" gas	30" electric / 30" gas
Diameter of air duct (in.) top	7"	7"	8"
Diameter of air duct (in.) back	3 1/4" x 10" rectangular	3 1/4" x 10" rectangular	8"
Net weight (lbs)	41 lbs	41 lbs	34 lbs

Optional Accessories for 300 and 500 Series Under-Cabinet Hoods

DHZ3002UC
Replacement Charcoal Filter

Optional Accessories for 800 Series Under-Cabinet Hood

DHZ3052UC
Replacement Charcoal Filter

DRZ3652UC
Recirculation Kit Adds 4" Height to Appliance

300 / 500 / 800 Series 36" Under-Cabinet Wall Hoods

300 / 500 Series 36" Under-Cabinet Hoods Dimensions

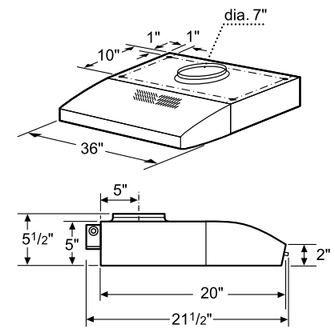

Dimensions in inches

800 Series 36" Under-Cabinet Hood Dimensions

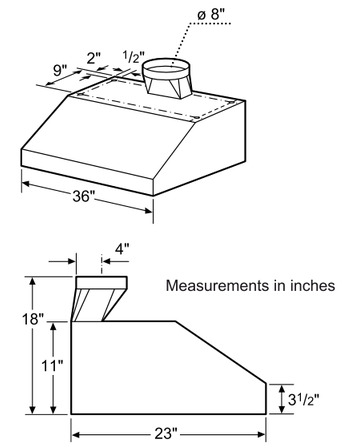

Measurements in inches

300 / 500 Series 36" Under-Cabinet Hoods Venting

Vertical discharge:
Use a rectangular duct 3 1/4" x 10".....

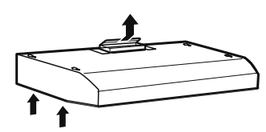

....or use a round 7" duct

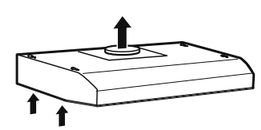

Horizontal discharge:
Use a rectangular duct 3 1/4" x 10"

Recirculating (non vented ductless)

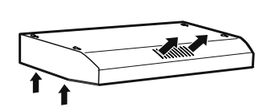

800 Series 36" Under-Cabinet Hood Venting

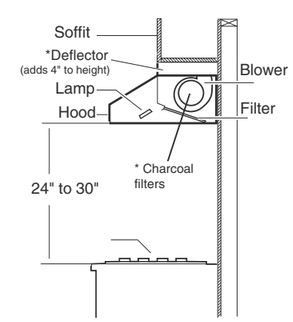

Recirculating
* Optional accessory - Ductless recirculation kit. Adds 4" to height of appliance.

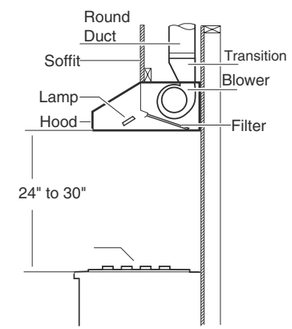

Vertical discharge

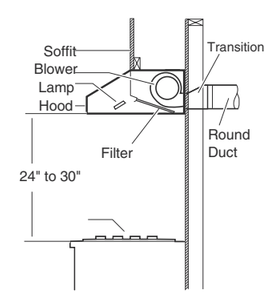

Horizontal discharge

800 Series Downdraft Hoods

30" – HDD80050UC

36" – HDD86050UC

800 Series
Downdraft Hoods

- 12" Telescopic Chimney
- 600 CFM Blower Options (Sold Separately)
- Aluminum Mesh Filters
- Three Power Levels
- Recirculation Option (Sold Separately)*

	30"	36"
	Stainless Steel – HDD80050UC	Stainless Steel – HDD86050UC
General Properties		
Operating mode	Convertible: ducted / recirculating	Convertible: ducted / recirculating
Maximum CFM	Blower sold separately	Blower sold separately
Sones**	2.1 WS / 11.8 HS	1.4 WS / 10.3 HS
Number of speed settings	3-stage	3-stage
Motor location	External	External
Damper included	No	No
Grease filter material	Aluminum	Aluminum
Grease filter type	Multilayer cassette	Multilayer cassette
Duct direction	Front, Left, Right, Rear	Front, Left, Right, Rear
Optional blower required	Yes (600 CFM options sold separately)	Yes (600 CFM options sold separately)
Technical Details		
Volts (V)	120 V	120 V
Frequency (Hz)	60 Hz	60 Hz
Plug type	120V-3 prong	120V-3 prong
Power cord length (in.)	30"	30"
Dimensions & Weight		
Overall appliance dimensions (width of canopy included) (HxWxD) (in.)	29 3/8" x 31" x 2 3/4"	29 3/8" x 37" x 2 3/4"
Height of the rise (in.)	12"	12"
Diameter of air duct (in.) internal	8"	8"
Diameter of air duct (in.) external	6" or 8"	6" or 8"
Net weight (lbs)	37 lbs	42 lbs
Accessories – Required		
Blower (sold separately)	Yes	Yes
Accessories – Transitions & Blowers		
6" side / rear transition	HDDSTRAN6	HDDSTRAN6
8" side / rear transition	HDDSTRAN8	HDDSTRAN8
NOTE: HDDSTRAN6 or HDDSTRAN8 required for side or rear exhaust applications with inline and remote blowers.		
6" round front plate	HDDFTRAN6	HDDFTRAN6
8" round front plate	HDDFTRAN8	HDDFTRAN8
NOTE: HDDFTRAN6 or HDDFTRAN8 required for front exhaust applications with inline and remote blowers.		
Transition for rectangular duct	HDDSTRAN2	HDDSTRAN2
2' rectangular duct	HDD2RECTD	HDD2RECTD
NOTE: HDDSTRAN2 needed to attach HDD2RECTD to downdraft. For use with installation of inline or remote blower applications.		
600 CFM flexible blower	DHG602DUC	DHG602DUC
600 CFM inline blower	DHG6015NUC	DHG6015NUC
600 CFM remote blower	DHG6023RUC	DHG6023RUC

**Sound test performed as per HVI standards at independent lab.

*Recirculation kit is not compatible with gas cooktop installations with downdraft

800 Series Downdraft Hoods

30" Downdraft Hood

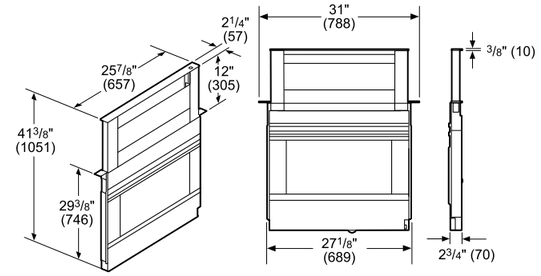

measurements in inches and (mm)

36" Downdraft Hood

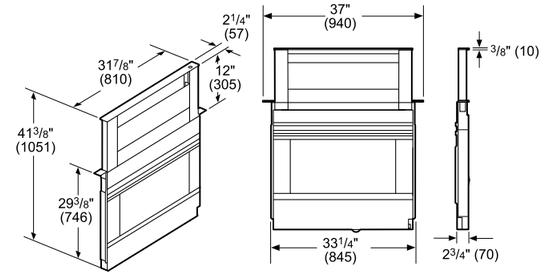

measurements in inches and (mm)

30" & 36" Downdraft Hood Clearances

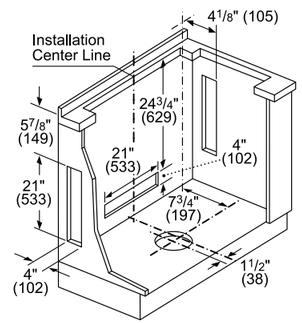

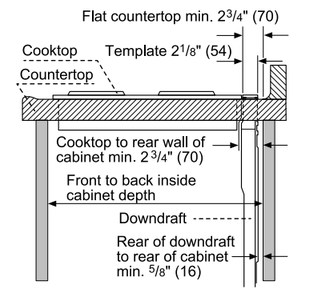

measurements in inches and (mm)

Measurements in inches and (mm)

Downdraft Hood with Gas Cooktop Cutout

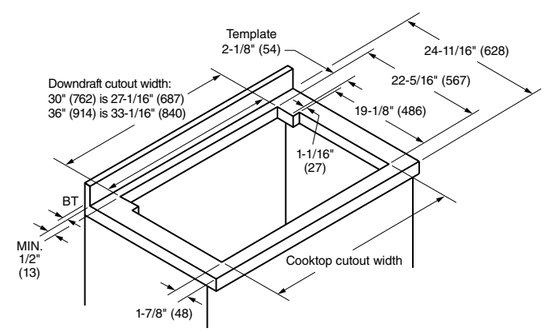

Downdraft Hood with Electric or Induction Cooktop Cutout

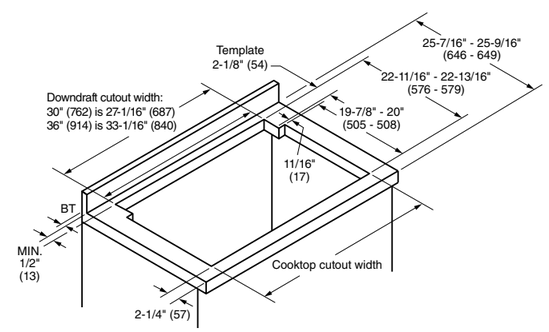

Optional Accessory for 30" Downdraft Hood

HDD0RSP
30" gas cooktop seal kit for downdraft
(required for installation with gas cooktops)

Optional Accessory for 36" Downdraft Hood

HDD6RSP
36" gas cooktop seal kit for downdraft
(required for installation with gas cooktops)

Optional Accessories for 30" and 36" Downdraft Hoods

HDDREC5UC
Recirculation kit
(not compatible with gas cooktop installations with downdraft)

HDDFILTUC
Charcoal filter replacement for recirculation kit

800 Series Downdraft Hoods

Inline or Remote Blower Installation – Available Blowers

DHG602DUC
600 CFM Flexible Integral Blower

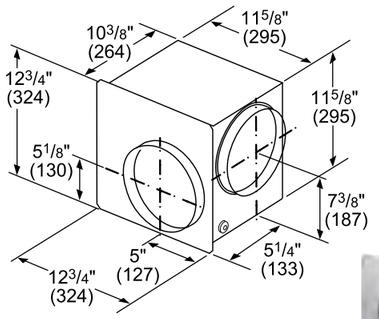

measurements in inches and (mm)

600 CFM flexible blower can mount to downdraft or be used as an inline blower, and can be rotated to exhaust downward or to sides

- Capable up to 600 CFM in performance
- Blower is able to mount to downdraft or be used as an inline blower
- Blower can be rotated to exhaust downward or toward sides
- Additional accessories may be required for installation, see manual

DHG6015NUC
600 CFM Inline Blower

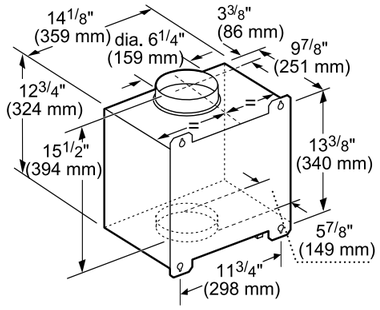

measurements in inches and mm

- For use with Bosch downdrafts
- Inline blowers can be mounted remotely to minimize blower noise in the cooking area
- Designed to be mounted inline with the ducting installation
- Blower is mounted on roof of exterior wall depending on application needs
- 6" transition required

DHG6023RUC
600 CFM Remote Blower

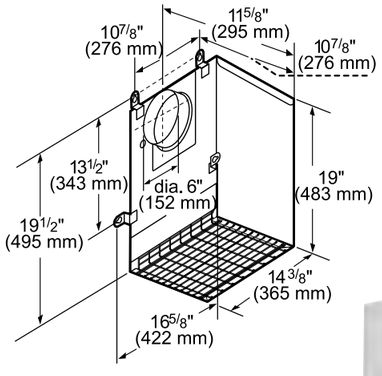

measurements in inches and mm

- For use with Bosch downdrafts
- Can be mounted on the exterior of the home to minimize noise in the cooking area
- Blower is mounted on roof of exterior wall depending on application needs
- 6" transition required

800 Series Downdraft Hoods

Optional Accessories

HDDREC5UC
Recirculation Kit for Downdraft

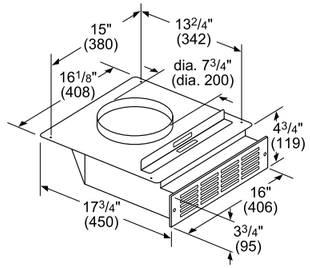

Measurements in inches and (mm)

When ducting to the exterior is not feasible, downdraft recirculation kit allows filtered air to reenter the kitchen while cooking

- When ducting is not feasible, kit eliminates need to exhaust outside
- Air is filtered through charcoal filter, then re-enters kitchen
- Includes recirculation module, filter and metal grille vent plate
- Designed to work with both 30" and 36" bosch downdrafts, HDD series
- Use with induction / electric cooktops only

HDDFILTUC
Charcoal Filter Replacement for Recirculation Kit for Downdraft

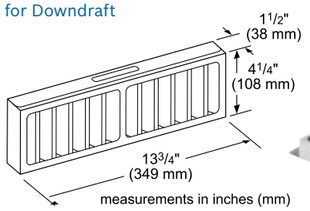

Maintain performance of Bosch downdraft recirculation kit with timely replacement of charcoal filter to capture and filter odors

- Replacement charcoal filter for HDDREC5UC recirculation kit
- Quality charcoal filter effectively captures and filters odors
- Replace charcoal filter every 6 months depending on usage

HDD0RSP
30" Gas Cooktop Seal Kit for Downdraft

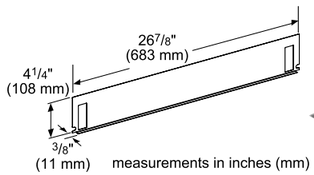

30" gas cooktop seal kit required for installation with 30" gas cooktops

- Includes trim, seal, metal grill, and fasteners
- Required for installation with gas cooktops

HDD6RSP
36" Gas Cooktop Seal Kit for Downdraft

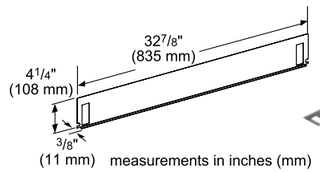

36" gas cooktop seal kit required for installation with 36" gas cooktops

- Includes trim, seal, metal grill, and fasteners
- Required for installation with gas cooktops

800 Series Downdraft Hoods

Inline or Remote Blower Installation – Side / Rear Downdraft Transitions

HDDSTRAN6
6" Side / Rear Transition for Downdraft

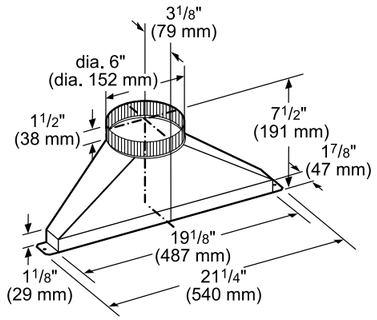

measurements in inches (mm)

6" Round transition enable ducting to be at sides or rear of downdraft for flexible configurations to maximize your kitchen design

- Flexible transition design allows for left, right or rear venting
- Front rough-in plate may be used with a 6" round duct or elbow
- Ability to use with DHG6015NUC inline or DHG6023RUC remote blowers
- Some blower positions may need deeper cabinets. See installation guide

HDDSTRAN8
8" Side / Rear Transition for Downdraft

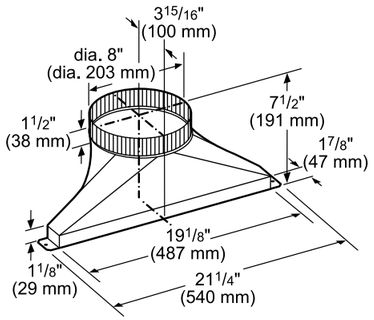

measurements in inches (mm)

8" Round transition enable ducting to be at sides or rear of downdraft for flexible configurations to maximize your kitchen design

- Flexible transition design allows for left, right or rear venting
- For DHG602DUC flexible downdraft blower used as inline installation
- Some blower positions may need deeper cabinets. See installation guide

NOTE: HDDSTRAN6 or HDDSTRAN8 side / rear transition required for side or rear exhaust applications with inline and remote blowers.

800 Series Downdraft Hoods

Inline or Remote Blower Installation – Round Front Downdraft Plates

HDDFTRAN6
6" Round Front Plate for Downdraft

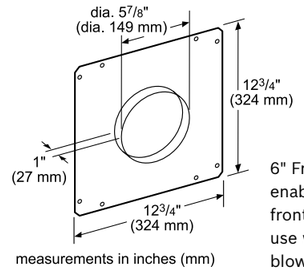

measurements in inches (mm)

6" Front rough-in plate enable ducting to be at front of downdraft, for use with inline and remote blower applications

- Front rough-in plate design allows for front venting
- Front rough-in plate may be used with a 6" round duct or elbow
- Ability to use with DHG6015NUC inline or DHG6023RUC remote blowers

HDDFTRAN8
8" Round Front Plate for Downdraft

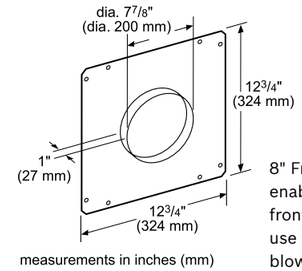

measurements in inches (mm)

8" Front rough-in plate enable ducting to be at front of downdraft, for use with inline and remote blower applications

- Front rough-in plate design allows for front venting
- Front rough-in plate may be used with a 8" round duct or elbow
- For DHG602DUC flexible downdraft blower used as inline installation

NOTE: HDDFTRAN6 or HDDFTRAN8 front plate required for front exhaust applications with inline and remote blowers.

Inline or Remote Blower Installation – Transition for Rectangular Duct for Downdraft

HDDSTRAN2
Transition for Rectangular Duct for Downdraft

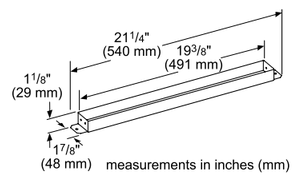

measurements in inches (mm)

Rectangular duct transition required to connect 2' rectangular duct to downdraft

Inline or Remote Blower Installation – 2' Rectangular Duct for Downdraft

HDD2RECTD
2' Rectangular Duct Downdraft

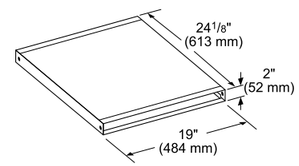

measurements in inches (mm)

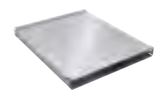

2' Rectangular duct can be used as extension to exhaust through a cabinet or wall while maximizing cabinet storage space

- Duct can be used as an extension to exhaust through a cabinet or wall
- May be attached to sides or rear of downdraft housing
- HDDRECTRN transition needed to connect HDD2RECTD to downdraft housing
- For use with remote or inline blowers

800 Series Downdraft Hoods

Flexible Blower Installation – Front Exhaust Example

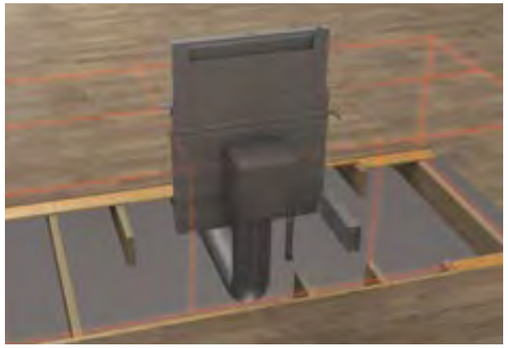

Application

- Flexible blower attached can rotate for left, right or downward discharge
- Front downward application with flexible blower
- Requires space under floor line for ductwork*
- Can be used with optional Recirculation Kit, sold separately
- Elbow, ductwork, blower support structure frame not included

Required Blower

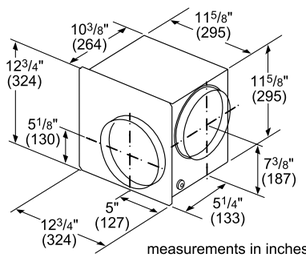

DHG602DUC
600 CFM Flexible Integral Blower

600 CFM flexible blower can mount to downdraft or be used as an inline blower, and can be rotated to exhaust downward or to sides

Optional Accessories

HDDREC5UC
Recirculation Kit for Downdraft

When ducting to the exterior is not feasible, downdraft recirculation kit allows filtered air to reenter the kitchen while cooking

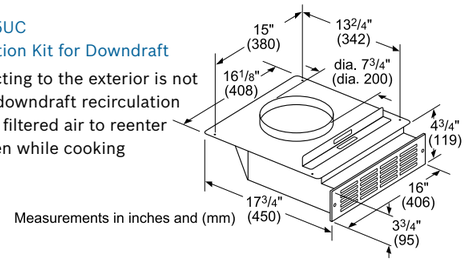

HDDFILTUC
Charcoal Filter Replacement for Recirculation Kit for Downdraft

Maintain performance of Bosch downdraft recirculation kit with timely replacement of charcoal filter to capture and filter odors

HDD0RSP
30" Gas Cooktop Seal Kit for Downdraft

30" gas cooktop seal kit required for installation with 30" gas cooktops

HDD6RSP
36" Gas Cooktop Seal Kit for Downdraft

36" gas cooktop seal kit required for installation with 36" gas cooktops

*For only front downward ducting applications, electrical panel must be remotely mounted. Electrical panel can still be remotely mounted in other exhaust configurations if desired. Electrical panel interconnect cable length is 5-ft. long.

800 Series Downdraft Hoods

Flexible Blower Installation – Front Exhaust with Flexible Blower Used as an Inline Option Example

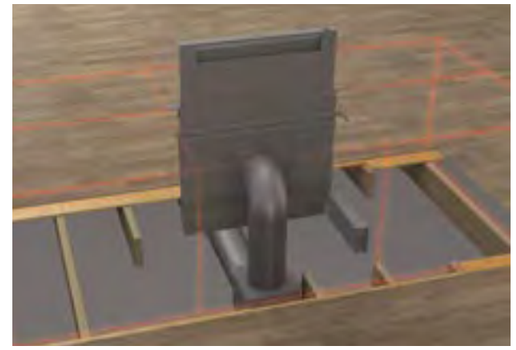

Application

- Side exhaust with flexible blower used as inline option if ducting is more convenient with this configuration
- Requires at least 18" of clearance to fit the blower and transition
- Blower must be accessible for maintenance
- Elbow, ductwork, blower support structure frame not included

Required Blower

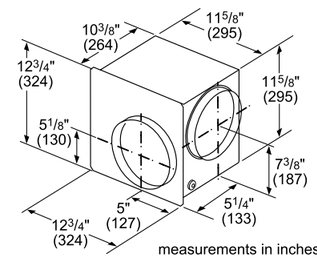

DHG602DUC
600 CFM Flexible Integral Blower

600 CFM flexible blower can mount to downdraft or be used as an inline blower, and can be rotated to exhaust downward or to sides

Required Accessories

HDDFTRAN8
8" Round Front Plate for Downdraft

8" Front rough-in plate enable ducting to be at front of downdraft, for use with inline and remote blower applications

NOTE: HDDFTRAN8 front plate required for front exhaust applications with inline and remote blowers.

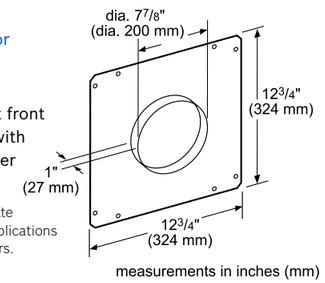

HDDSTRAN8
8" Side / Rear Transition for Downdraft

8" Round transition enable ducting to be at sides or rear of downdraft for flexible configurations to maximize your kitchen design

NOTE: HDDSTRAN8 side / rear transition required for side or rear exhaust applications with inline and remote blowers.

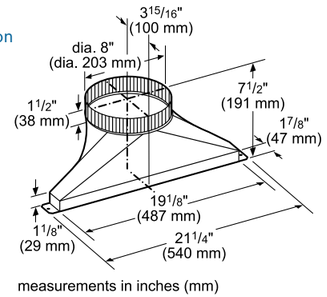

Optional Accessories

HDD0RSP
30" Gas Cooktop Seal Kit for Downdraft

30" gas cooktop seal kit required for installation with 30" gas cooktops

HDD6RSP
36" Gas Cooktop Seal Kit for Downdraft

36" gas cooktop seal kit required for installation with 36" gas cooktops

NOTE: Some applications may require deeper cabinets. Side and rear exhaust require at least 18" of clearance to fit the blower and / or ductwork. Refer to installation instructions.

800 Series Downdraft Hoods

Flexible Blower Installation – Side Exhaust Example

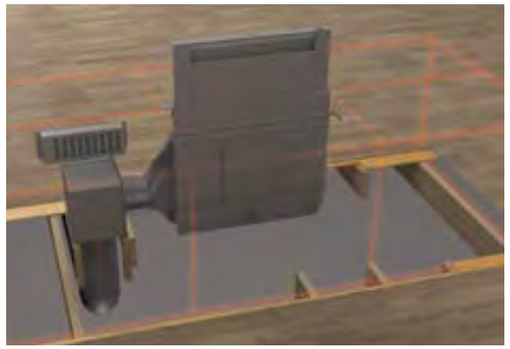

Left Side Exhaust

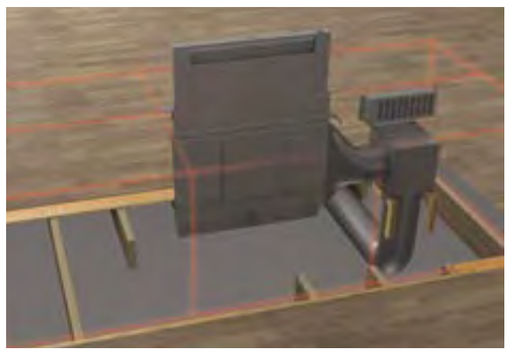

Right Side Exhaust

Required Accessories

HDDSTRAN8
8" Side / Rear Transition for Downdraft

8" Round transition enable ducting to be at sides or rear of downdraft for flexible configurations to maximize your kitchen design

NOTE: HDDSTRAN8 side / rear transition required for side or rear exhaust applications with inline and remote blowers.

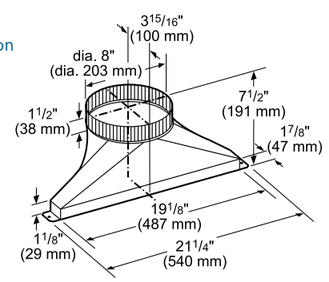

measurements in inches (mm)

Application

- Side exhaust option if ducting is more convenient with this configuration
- Requires at least 18" of clearance to fit the blower and transition
- Can be used with optional Recirculation Kit, sold separately
- Elbow, ductwork, blower support structure frame not included

Required Blower

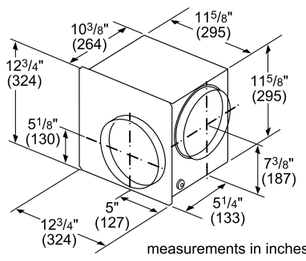

measurements in inches and (mm)

DHG602DUC
600 CFM Flexible Integral Blower

600 CFM flexible blower can mount to downdraft or be used as an inline blower, and can be rotated to exhaust downward or to sides

Optional Accessories

HDDREC5UC
Recirculation Kit for Downdraft

When ducting to the exterior is not feasible, downdraft recirculation kit allows filtered air to reenter the kitchen while cooking

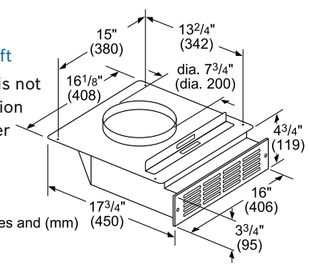

Measurements in inches and (mm)

HDDFILTUC
Charcoal Filter Replacement for Recirculation Kit for Downdraft

Maintain performance of Bosch downdraft recirculation kit with timely replacement of charcoal filter to capture and filter odors

HDD0RSP
30" Gas Cooktop Seal Kit for Downdraft

30" gas cooktop seal kit required for installation with 30" gas cooktops

HDD6RSP
36" Gas Cooktop Seal Kit for Downdraft

36" gas cooktop seal kit required for installation with 36" gas cooktops

NOTE: Some applications may require deeper cabinets. Side and rear exhaust require at least 18" of clearance to fit the blower and / or ductwork. Refer to installation instructions.

800 Series Downdraft Hoods

Flexible Blower Installation – Side Exhaust with Slim 2' Rectangular Duct Example

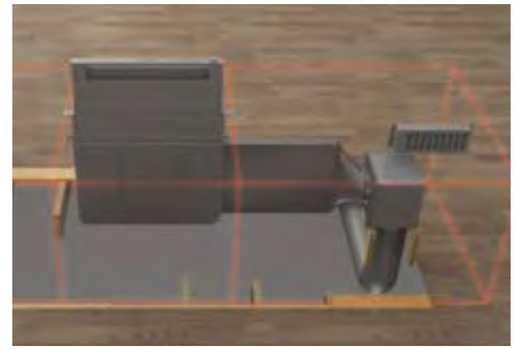

Required Accessories

HDD2RECTD
2' Rectangular Duct Downdraft

2' Rectangular duct can be used as extension to exhaust through a cabinet or wall while maximizing cabinet storage space

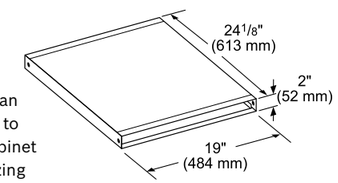

measurements in inches (mm)

HDDSTRAN2
Transition for Rectangular Duct for Downdraft

Rectangular duct transition required to connect 2' rectangular duct to downdraft

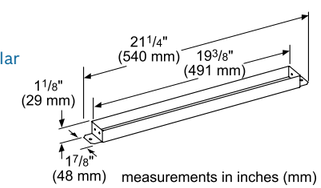

measurements in inches (mm)

HDDSTRAN8
8" Side / Rear Transition for Downdraft

8" Round transition enable ducting to be at sides or rear of downdraft for flexible configurations to maximize your kitchen design

NOTE: HDDSTRAN8 side / rear transition required for side or rear exhaust applications with inline and remote blowers.

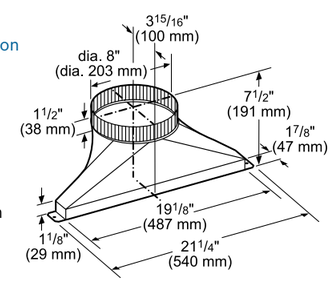

measurements in inches (mm)

Application

- Side exhaust option if ducting is more convenient with this configuration
- A slim 2' rectangular duct is available to place flexible blower in areas such as unused corner in island or peninsula applications
- Can be used with optional Recirculation Kit, sold separately
- Elbow, ductwork, blower support structure frame not included

Required Blower

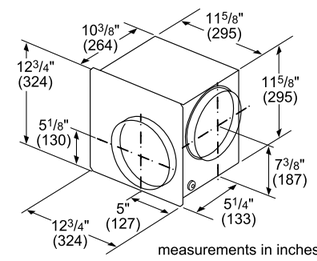

measurements in inches and (mm)

DHG602DUC
600 CFM Flexible Integral Blower

600 CFM flexible blower can mount to downdraft or be used as an inline blower, and can be rotated to exhaust downward or to sides

Optional Accessories

HDDREC5UC
Recirculation Kit for Downdraft

When ducting to the exterior is not feasible, downdraft recirculation kit allows filtered air to reenter the kitchen while cooking

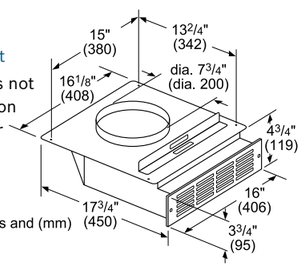

Measurements in inches and (mm)

HDDFILTUC
Charcoal Filter Replacement for Recirculation Kit for Downdraft

Maintain performance of Bosch downdraft recirculation kit with timely replacement of charcoal filter to capture and filter odors

HDD0RSP
30" Gas Cooktop Seal Kit for Downdraft

30" gas cooktop seal kit required for installation with 30" gas cooktops

HDD6RSP
36" Gas Cooktop Seal Kit for Downdraft

36" gas cooktop seal kit required for installation with 36" gas cooktops

NOTE: Some applications may require deeper cabinets. Side and rear exhaust require at least 18" of clearance to fit the blower and / or ductwork. Refer to installation instructions.

800 Series Downdraft Hoods

Flexible Blower Installation – Rear Exhaust Example

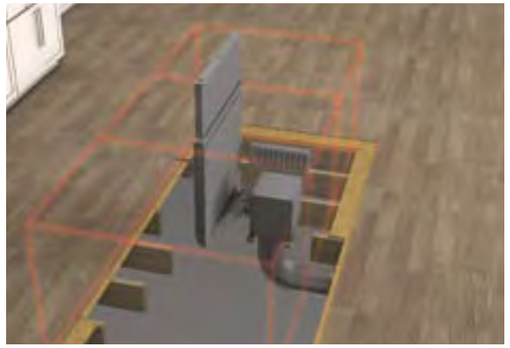

Required Accessories

HDDSTRAN8
8" Side / Rear Transition for Downdraft

8" Round transition enable ducting to be at sides or rear of downdraft for flexible configurations to maximize your kitchen design

NOTE: HDDSTRAN8 side / rear transition required for side or rear exhaust applications with inline and remote blowers.

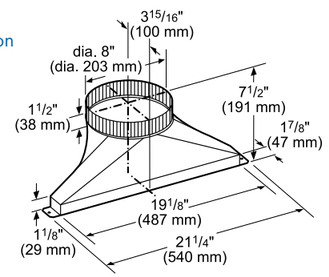

Application

- Rear exhaust option is possible if ducting is more convenient with this configuration
- Requires at least 18" of clearance to fit the blower and transition
- Blower must be accessible for maintenance
- Can be used with optional Recirculation Kit, sold separately
- Elbow, ductwork, blower support structure frame not included

Required Blower

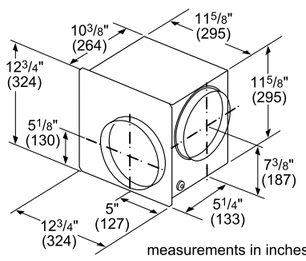

DHG602DUC
600 CFM Flexible Integral Blower

600 CFM flexible blower can mount to downdraft or be used as an inline blower, and can be rotated to exhaust downward or to sides

Optional Accessories

HDDREC5UC
Recirculation Kit for Downdraft

When ducting to the exterior is not feasible, downdraft recirculation kit allows filtered air to reenter the kitchen while cooking

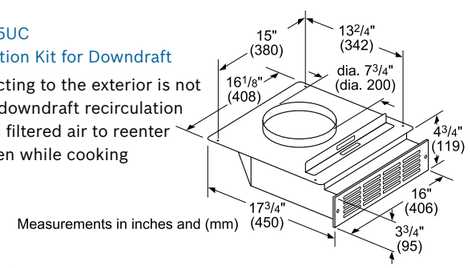

HDDFILTUC
Charcoal Filter Replacement for Recirculation Kit for Downdraft

Maintain performance of Bosch downdraft recirculation kit with timely replacement of charcoal filter to capture and filter odors

HDD0RSP
30" Gas Cooktop Seal Kit for Downdraft

30" gas cooktop seal kit required for installation with 30" gas cooktops

HDD6RSP
36" Gas Cooktop Seal Kit for Downdraft

36" gas cooktop seal kit required for installation with 36" gas cooktops

NOTE: Some applications may require deeper cabinets. Side and rear exhaust require at least 18" of clearance to fit the blower and / or ductwork. Refer to installation instructions.

800 Series Downdraft Hoods

Flexible Blower Installation – Recirculation Example

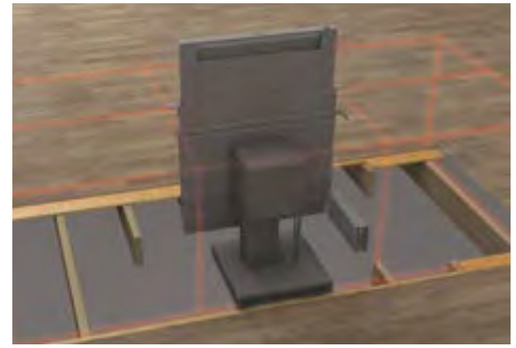

Required Accessories

HDDREC5UC
Recirculation Kit for Downdraft

When ducting to the exterior is not feasible, downdraft recirculation kit allows filtered air to reenter the kitchen while cooking

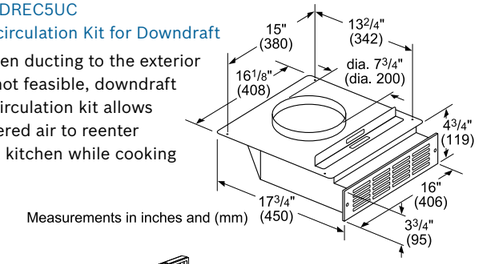

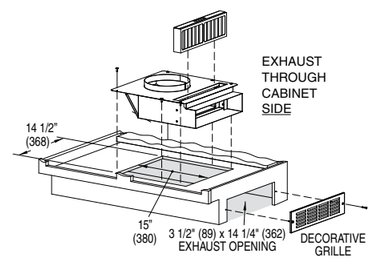

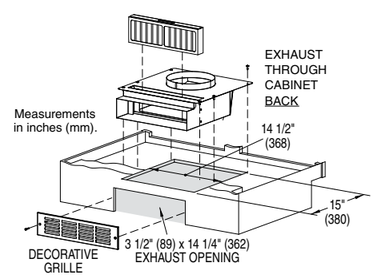

Application

- Allows for non-ducted downdraft installation by eliminating the need to exhaust to the exterior of the home
- Mount to toe kick or base of a cabinet and attach directly to flexible blower
- Recirculation module and metal grill vent plate placement can be rotated for flexible exhaust placement
- Elbow, ductwork, blower support structure frame not included

Required Blower

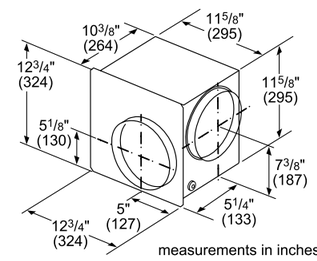

DHG602DUC
600 CFM Flexible Integral Blower

600 CFM flexible blower can mount to downdraft or be used as an inline blower, and can be rotated to exhaust downward or to sides

Optional Accessories

HDDFILTUC
Charcoal Filter Replacement for Recirculation Kit for Downdraft

Maintain performance of Bosch downdraft recirculation kit with timely replacement of charcoal filter to capture and filter odors

HDD0RSP
30" Gas Cooktop Seal Kit for Downdraft

30" gas cooktop seal kit required for installation with 30" gas cooktops

HDD6RSP
36" Gas Cooktop Seal Kit for Downdraft

36" gas cooktop seal kit required for installation with 36" gas cooktops

300 / 500 Series Custom Insert Hoods

300 Series
21" – HUI31451UC
500 Series
29" – DHL755BUC
Custom Insert Hoods

- 400 CFM
- 2 Halogen Lights
- Aluminum Mesh Filters
- Slide Control Switch

	300 Series	500 Series
	21" – HUI31451UC	29" – DHL755BUC
General Properties		
Operating mode	Ducted	Ducted
Maximum CFM	400 CFM	400 CFM
Number of speed settings	3-stage	3-stage
Motor location	Integrated motor in hood body	Integrated motor in hood body
Number of lights	2	2
Bulb type	Halogen	Halogen
Total power of the lamps (W)	40 W	40 W
Damper included	Yes	Yes
Grease filter material	Aluminum	Aluminum
Grease filter type	Multilayer cassette	Multilayer cassette
Technical Details		
Volts (V)	120 V	120 V
Frequency (Hz)	60 Hz	60 Hz
Plug type	120V-3 prong	120V-3 prong
Power cord length (in.)	51"	51"
Dimensions & Weight		
Overall appliance dimensions (width of canopy included) (HxWxD) (in.)	10" x 20 3/4" x 15"	6 1/4" x 28 11/16" x 15"
Required distance above cooktop / range cooking surface	30" electric / 30" gas	30" electric / 30" gas
Diameter of air duct (in.) top	6"	6"
Net weight (lbs)	19 lbs	23 lbs

300 / 500 Series Custom Insert Hoods

21" Custom Insert Hood

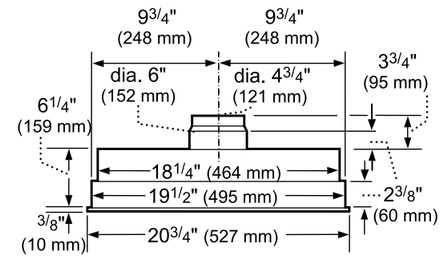

measurements in inches and mm

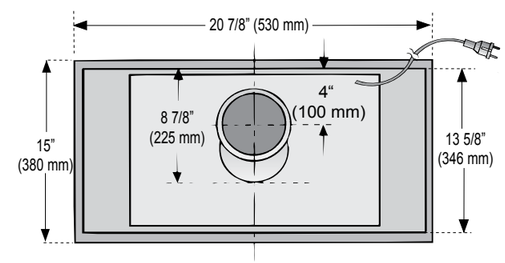

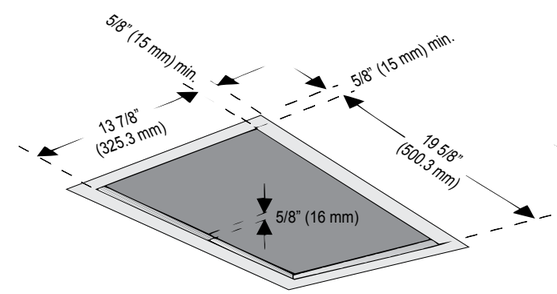

29" Custom Insert Hood

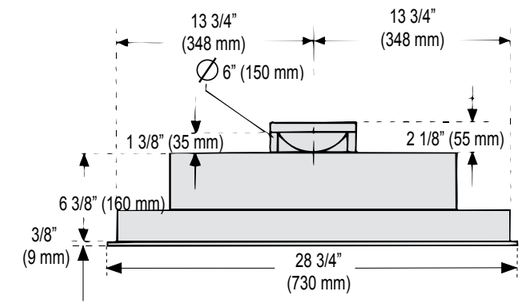

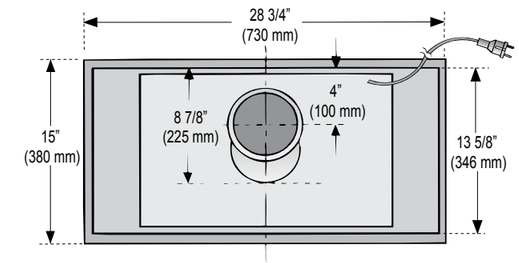

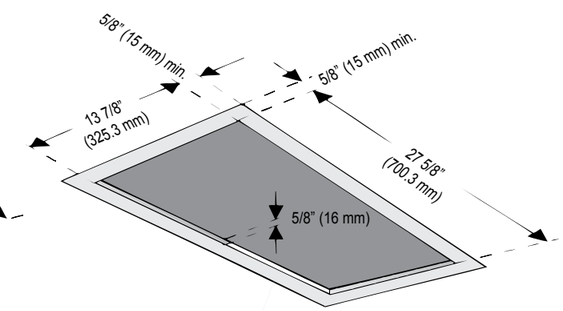

Dishwashers

From their legendary quiet performance to their promise of sparkling clean dishes, Bosch dishwashers deliver a lasting quality you've come to trust and expect. As the quietest dishwasher brand in the U.S.,* Bosch dishwashers bring peace and quiet to the kitchen. And now with the industry's largest 3rd rack loading capacity,** The MyWay® rack lends a new level of loading ease. Plus, our Rackmatic® adjustable middle rack and FlexSpace™ tines offer even more flexible loading options. Discover how Bosch dishwashers are flexible enough to handle whatever life brings.

*Based on an average of sound ratings of 24" Full Size Stainless Steel Tub dishwashers contained in major brands websites. Major brands defined as TraQline Top 5 Market Share Dec 2017.
**Vs. major brands with 3rd rack. Major brands defined as TraQline Top 5 Market Share Dec 2017.

Benchmark® Series Dishwashers

MyWay® rack

The largest, most versatile 3rd rack of its kind, MyWay® easily fits more of your larger, deeper items like cereal bowls, freeing up extra space for oversized items in the bottom rack.

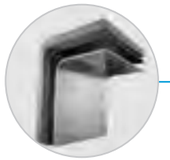

Ultra-quiet performance

Our quietest dishwasher line, Benchmark® Series models offer near-silent performance with models as low as 38 dBA. (Available on select Benchmark® Series models only)

EasyGlide™ rack system on all three racks

Smooth-rolling ball bearings add a smoother glide to all three racks, so you get a more premium feel with every pull—even when the rack is fully loaded. (Available on select Benchmark® Series models only.)

FlexSpace™ Plus tines

FlexSpace™ Plus gives you complete flexibility. Either fold down every other tine in the row or fold them all down—to create space to load larger dishes such as pasta bowls or even small frying pans more efficiently. (Available on select Benchmark® Series models only)

Interior light

A bright white interior light adds an aesthetic accent in the kitchen and makes loading easier in dim lighting. (Available on select Benchmark® Series models only)

TimeLight®

Shines the amount of time remaining in the cycle right on the floor. (Available on select Benchmark® Series models only)

Water softener

A built-in water softener removes hard water spots caused by lime deposits, softening the water to the appropriate level to ensure spot-free, shiny dishes. (Available on select Benchmark® Series models only)

TFT display

The full-color TFT control is intuitive and easy to use, while also matching the other Bosch products in the Benchmark® Series kitchen. (Available on select Benchmark® Series models only)

Benchmark® Series Dishwashers

Benchmark® Series
SHP87PW55N
SHX87PW55N

- 42 dBA
- MyWay® 3rd Rack
- Speed60®
- TimeLight®

Benchmark® Series
SHP88PW55N
SHX88PW55N
SHV88PW53N

+ 40 dBA
+ FlexSpace™ Plus Tines
+ Water Softener
+ EasyGlide™ Rack System Upper and Lower Rack

Benchmark® Series
SHE89PW55N
SHX89PW55N
SHV89PW53N

+ 39 dBA (Custom Panel Model is 40 dBA)
+ Interior Light
+ EasyGlide™ Rack System on All 3 Loading Levels
+ TFT Display

+ Indicates a step-up feature

	Pocket Handle – SHP87PW55N Bar Handle – SHX87PW55N	Pocket Handle – SHP88PW55N Bar Handle – SHX88PW55N Custom Panel – SHV88PW53N	Recessed Handle – SHE89PW55N Bar Handle – SHX89PW55N Custom Panel – SHV89PW53N
General Properties			
Number of wash cycles / options	6 / 6	6 / 6	7 / 7
dBA	42	40	39 / 39 / 40
Third rack	MyWay® Rack	MyWay® Rack	MyWay® Rack
Rack adjustability	RackMatic®	RackMatic®	RackMatic®
Tub material	Stainless steel	Stainless steel	Stainless steel
Control type	Touch control	Touch control	Touch control with TFT display
Concealed heating element	Yes	Yes	Yes
Leak protection system	24/7 AquaStop®	24/7 AquaStop®	24/7 AquaStop®
Water softener	No	Yes	Yes
Five-level wash	Yes	Yes	Yes
ChildLock	No	No	No
InfoLight® / TimeLight®	TimeLight®	TimeLight®	Bar handle and custom panel only
Special features	Extra dry option	Extra dry option	Interior light, EasyGlide™ Rack System on all levels
Efficiency and Capacity			
Water usage per cycle	2.9	2.9	2.9
Energy efficiency class	Tier 1	Tier 1	Tier 1
ENERGY STAR® qualified	Yes	Yes	Yes
Total annual energy / water consumption	269 kWh / 623.5 g	269 kWh / 623.5 g	269 kWh / 623.5 g
Number of place settings	16	16	16
Technical Data			
Watts (W)	1440 W	1440 W	1440 W
Current (A) / Volts (V) / Frequency (Hz)	12 A / 120 V / 60 Hz	12 A / 120 V / 60 Hz	12 A / 120 V / 60 Hz
Power cord length	N/A	N/A	N/A
Minimum water pressure (lb / sin)	14	14	14
Length outlet hose (in)	79"	79"	79"
Dimensions & Weight			
Overall appliance dimensions (HxWxD) (in)	33 7/8" x 23 9/16" x 23 3/4"	33 7/8" x 23 9/16" x 23 3/4" (Custom panel D: 23 1/16")	33 7/8" x 23 9/16" x 23 3/4" (Custom panel W: 23 1/16")
Required cutout size (HxWxD) (in)	33 7/8" x 23 5/8" x 24"	33 7/8" x 23 5/8" x 24"	33 7/8" x 23 5/8" x 24"
Adjustable feet	Yes	Yes	Yes
Net weight (lbs)	103 lbs	112 / 112 / 109 lbs	111 / 111 / 108 lbs

Optional Accessories

SGZ9091UC
Softener Salt
(4.4 lbs)

SMZPC002UC
Power Cord
with Cold Plug

SMZSH002UC
Bosch Dishwasher
Water Supply Hose

SMZPCSH2UC
Bosch Dishwasher Water Supply Hose
& Accessory Power Cord (Rear Connection)

SGZ1010UC
Drain Hose
Extension 76 3/4"

Benchmark® Series Dishwashers

Dimensions and Cutout

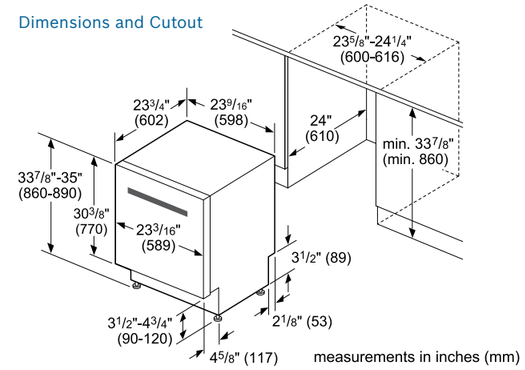

Custom Panel – Dimensions and Cutout

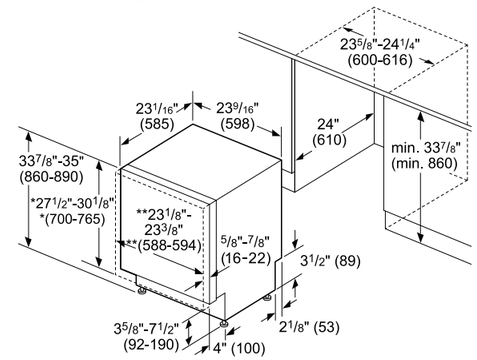

* measured from the bottom edge of the countertop panel thickness recommended 3/4" (20 mm).
This dishwasher can accept custom door panel weights ranging from 7 to 24 lbs; however, the dishwasher comes from the factory ready for custom panel door weights from 11 to 18 lbs.
If you plan on using a door panel that is not 11 to 18 lbs. please contact customer service at (800) 944-2904.

** 24" (610 mm) wide panel may be used depending on cabinet design

Note: Refer to installation template for mounting hardware locations

measurements in inches (mm)

Example of Hardwire Installation

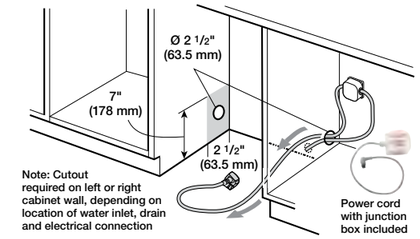

Example of Electrical Receptacle Installation

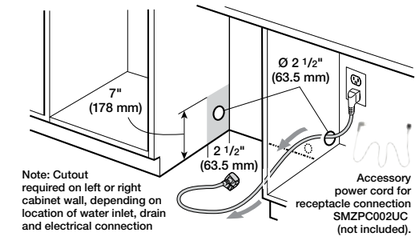

Water and Electrical Locations

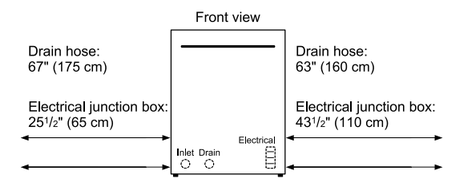

All connections are at the rear of the appliance.
Extension for drain hose available as accessory.
Power cord for connection to electrical outlet (3-prong plug) available as accessory.

Plumbing

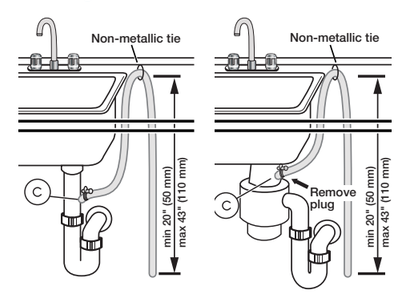

Note: Plumbing installations will vary - refer to local codes. Drain hose included is 79 (201 cm) and can be extended to a maximum of 155 3/4" (396 cm).

Always use the approved drain hose extension kit (SGZ1010UC).

Ensure a portion of the drain hose is raised between min. 20" (50 cm) and max. 43" (110 cm) above the cabinet floor.

Included Parts & Accessories

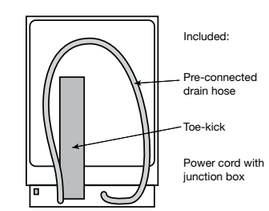

Optional Accessories Continued

SMZ1007UC
Stainless Steel Bosch
Dishwasher Bar Handle

SMZ4026 (Small)
SMZ5400 (Large)
Silverware Insert for MyWay® Rack

SMZ5000
Accessory Kit: Extra Tall Item Sprinkler, Vase and Bottle Holder, 3 Plastic Item Clips and Small Item Basket

SMZ5002UC
Anti-Tarnish Silverware Cassette

Benchmark® Series Dishwashers

Benchmark®	+ 38 dBA (Custom Panel Model is 39 dBA)
Series	+ Telescopic Glide Rails on All 3 Levels
SHE89PW75N	+ 24/7 Aquastop Plus
SHX89PW75N	+ Stainless Steel Toekick
SHV89PW73N	• Flexible 3rd Rack

+ Indicates a step-up feature

	Recessed Handle – SHE89PW75N Bar Handle – SHX89PW75N Custom Panel – SHV89PW73N
General Properties	
Number of wash cycles / options	7 / 7
dBA	38 / 38 / 39
Third rack	Flexible 3rd rack
Rack adjustability	RackMatic®
Tub material	Stainless steel
Control type	TFT Touch Control
Concealed heating element	Yes
Leak protection system	24/7 AquaStop® Plus
Water softener	Yes
Five-level wash	Yes
ChildLock	Recessed handle model only
TFT display	Recessed handle model only
Special features	Telescopic Glides on all 3 levels, Stainless Steel Toekick
Efficiency and Capacity	
Water usage per cycle	2.9
Energy efficiency class	Tier 1
ENERGY STAR® qualified	Yes
Total annual energy / water consumption	269 kWh / 623.5 g
Number of place settings	15
Technical Data	
Watts (W)	1440 W
Current (A) / Volts (V) / Frequency (Hz)	12 A / 120 V / 60 Hz
Power cord length	N/A
Minimum water pressure (lb / sin)	7
Length inlet / outlet hose (in)	55" / 63"
Dimensions & Weight	
Overall appliance dimensions (HxWxD) (in)	Recessed and bar handle: 34 1/16" x 23 9/16" x 22 9/16" (Custom panel D: 21 5/8")
Required cutout size (HxWxD) (in)	34 1/8" x 24" x 24"
Adjustable feet	Yes
Net weight (lbs)	123 / 128 / 118 lbs

Optional Accessories

SGZ9091UC Softener Salt (4.4 lbs)	SMZPC002UC Power Cord with Cold Plug	SMZ1007UC Stainless Steel Bosch Dishwasher Bar Handle	SMZ5002UC Anti-Tarnish Silverware Cassette

Benchmark® Series Dishwashers

Dimensions and Cutout

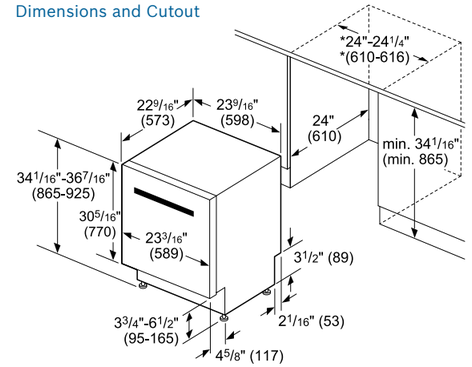

*23 5/8" (600) without decor strips measurements in inches (mm)

Custom Panel – Dimensions and Cutout

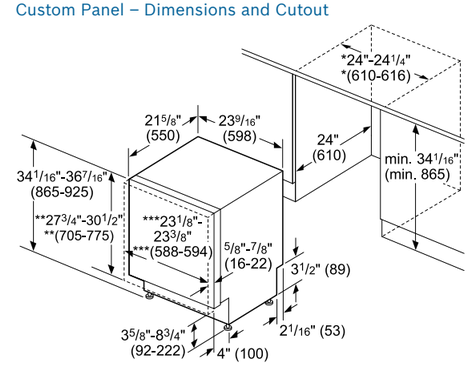

* 23 5/8" (600 mm) without decor strips
** measured from the bottom edge of the countertop panel thickness recommended 3/4" (20 mm), panel weight 7–22 lbs (3–10 kg)
*** 24" (610 mm) wide panel may be used depending on cabinet design

Note: Refer to installation template for mounting hardware locations

measurements in inches (mm)

Example of Hardwire Installation

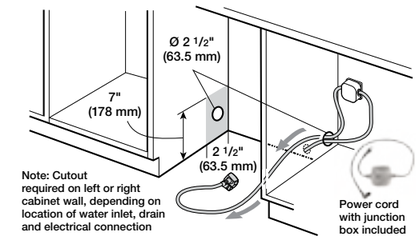

Example of Electrical Receptacle Installation

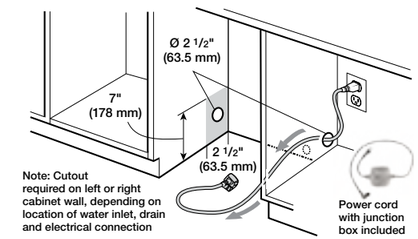

Water and Electrical Locations

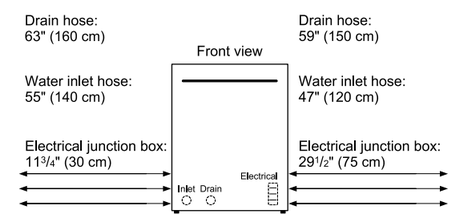

All connections are at the rear of the appliance.
Extension for drain hose available as accessory.
Power cord for connection to electrical outlet (3-prong plug) available as accessory.

Plumbing

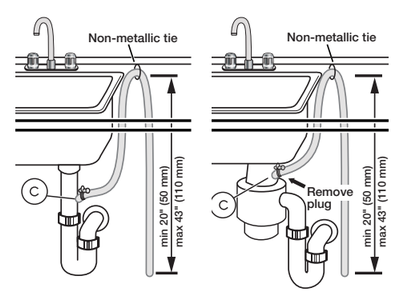

Note: Plumbing installations will vary - refer to local codes. Drain hose included is 88 5/8" (225 cm) and can be extended to a maximum of 165 3/8" (420 cm).

Always use the approved drain hose extension kit (SGZ1010UC).

Ensure a portion of the drain hose is raised between min. 20" (50 cm) and max. 43" (110 cm) above the cabinet floor.

Included Parts & Accessories

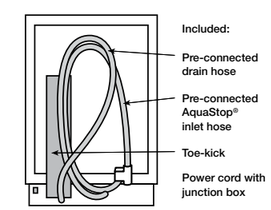

100 Series Dishwashers

5
2
6

100 Series
*SHE3AR7_UC
*SHX3AR7_UC

- 50 dBA
- 6 Cycles / 2 Options
- Racks with Manual Height Adjustment

5
2
6

100 Series
*SHEM3AY5_N

- 50 dBA
- + Anti-fingerprint (SHEM3AY55N)
- + Utility Rack

+ Indicates a step-up feature
* Multiple colors available. See color chips to fill in missing digit.

	100 Series	100 Series
	Recessed Handle – SHE3AR7_UC Bar Handle – SHX3AR7_UC	Recessed Handle – SHEM3AY5_N
General Properties		
Number of wash cycles / options	6 / 2	6 / 2
dBA	50	50
Third rack	No	Yes (Utility Rack)
Rack adjustability	Manual	Manual
Tub material	Stainless steel / polypropylene	Stainless steel / polypropylene
Control type	Buttons	Buttons
Concealed heating element	Yes	Yes
Leak protection system	24/7 Overflow Protection	24/7 Overflow Protection
Water softener	No	No
Five-level wash	Yes	Yes
ChildLock	Recessed handle model only	Yes
TFT display	No	No
InfoLight®	No	No
Special features	50 dBA, 24/7 Overflow Protection, Detergent Tray	Anti-fingerprint (SHEM3AY55N), Utility Rack
Efficiency and Capacity		
Water usage per cycle	3.2	3.2
Energy efficiency class	Tier 1	Tier 1
ENERGY STAR® qualified	Yes	Yes
Total annual energy / water consumption	269 kWh / 688 g	269 kWh / 688 g
Number of place settings	14	14
Technical Data		
Watts (W)	1400 W	1400 W
Current (A) / Volts (V) / Frequency (Hz)	12 A / 120 V / 60 Hz	12 A / 120 V / 60 Hz
Power cord length	N/A	N/A
Minimum water pressure (lb / sin)	15	15
Length outlet hose (in)	90 1/2"	90 1/2"
Dimensions & Weight		
Overall appliance dimensions (HxWxD) (in)	33 7/8" x 23 9/16" x 23 3/4"	33 7/8" x 23 9/16" x 22 9/16"
Required cutout size (HxWxD) (in)	33 7/8" x 24" x 24"	33 7/8" x 24" x 24"
Adjustable feet	Yes	Yes
Net weight (lbs)	69 / 71 lbs	76 lbs

Optional Accessories

SGZ1010UC Drain Hose Extension 76 3/4"	SGZPC001UC 3-Prong Power Cord 55 1/4"	SGZ1052UC Accessory Kit	SMZ4000UC DoubleFlex Silverware Basket

100 Series Dishwashers

Dimensions and Cutout
*SHE3AR7_UC
*SHX3AR7_UC

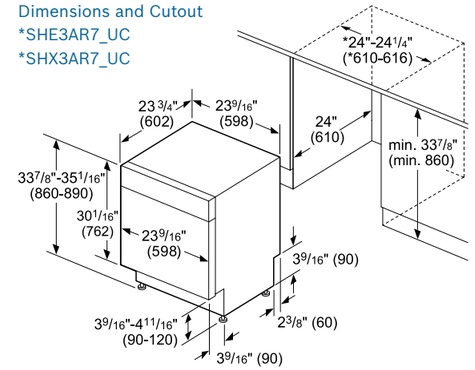

*23 5/8" (600) without decor strips measurements in inches (mm)

Dimensions and Cutout
*SHEM3AY5_N

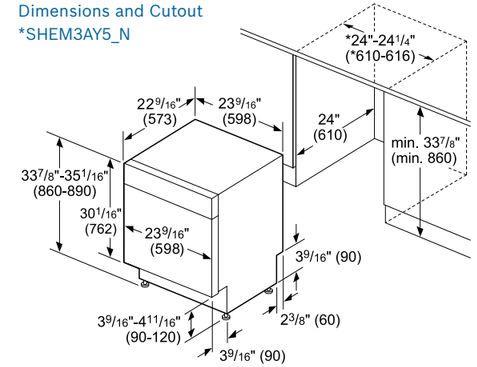

*23 5/8" (600) without decor strips measurements in inches (mm)

Example of Hardwire Installation

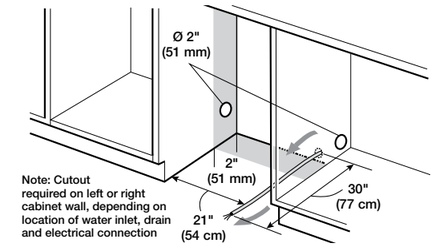

Example of Electrical Receptacle Installation

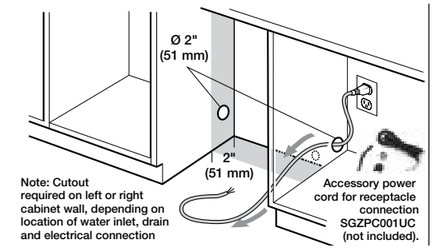

Water and Electrical Locations

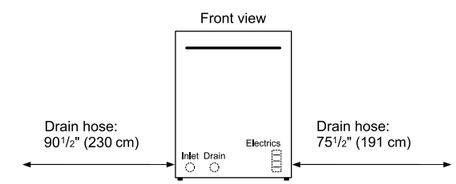

The electrical junction box and water inlet are at the front of the appliance, the drain at the rear.

Plumbing

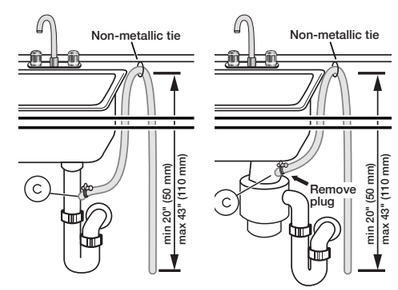

Note: Plumbing installations will vary - refer to local codes. Drain hose included is 90 1/2" (230 cm) and can be extended to a maximum of 168 1/2" (428 cm).

Always use the approved drain hose extension kit (SGZ1010UC).

Ensure a portion of the drain hose is raised between min. 20" (50 cm) and max. 43" (110 cm) above the cabinet floor.

Included Parts & Accessories

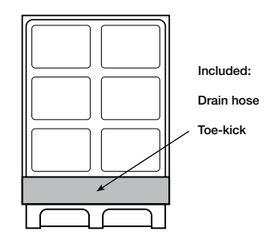

100 Series / DLX Dishwashers

5

2

6

100 Series
*SHXM4AY5_N

+48 dBA
• Anti-fingerprint (SHXM4AY55N)
+3rd Rack
+InfoLight®
+3-Level RackMatic®

100 Series DLX
SHX84AYD5N

+5 Cycles / 5 Options
+ExtraScrub Option
+Additional Upper Flip Tines

+Indicates a step-up feature
* Multiple colors available. See color chips to fill in missing digit.

	100 Series	100 Series DLX
	Bar Handle – SHXM4AY5_N	Bar Handle – SHX84AYD5N
General Properties		
Number of wash cycles / options	5 / 4	5 / 5
dBA	48	48
Third rack	Standard 3rd rack	Standard 3rd rack
Rack adjustability	3-Level RackMatic®	3-Level RackMatic®
Tub material	Stainless steel / polypropylene	Stainless steel / polypropylene
Control type	Buttons	Buttons
Concealed heating element	Yes	Yes
Leak protection system	24/7 Overflow Protection	24/7 Overflow Protection
Water softener	No	No
Five-level wash	Yes	Yes
ChildLock	No	No
TFT display	No	No
InfoLight®	Yes	Yes
Special features	3rd Rack, InfoLight®, Anti-fingerprint (SHXM4AY55N)	ExtraScrub option, Additional upper flip tines
Efficiency and Capacity		
Water usage per cycle	3.2	3.2
Energy efficiency class	Tier 1	Tier 1
ENERGY STAR® qualified	Yes	Yes
Total annual energy / water consumption	269 kWh / 688 g	269 kWh / 688 g
Number of place settings	15	15
Technical Data		
Watts (W)	1440 W	1440 W
Current (A) / Volts (V) / Frequency (Hz)	12 A / 120 V / 60 Hz	12 A / 120 V / 60 Hz
Power cord length	N/A	N/A
Minimum water pressure (lb / sin)	15	15
Length outlet hose (in)	90 1/2"	90 1/2"
Dimensions & Weight		
Overall appliance dimensions (HxWxD) (in)	33 7/8" x 23 9/16" x 22 9/16"	33 7/8" x 23 9/16" x 22 9/16"
Required cutout size (HxWxD) (in)	33 7/8" x 24" x 24"	33 7/8" x 24" x 24"
Adjustable feet	Yes	Yes
Net weight (lbs)	76 lbs	76 lbs

Optional Accessories

SGZ1010UC
Drain Hose Extension 76 3/4"

SGZPC001UC
3-Prong Power Cord 55 1/4"

SGZ1052UC
Accessory Kit

SMZ4000UC
DoubleFlex Silverware Basket

100 Series / DLX Dishwashers

Dimensions and Cutout

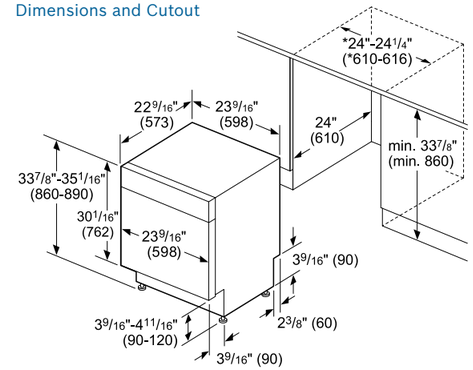

*23 5/8" (600) without decor strips measurements in inches (mm)

Water and Electrical Locations

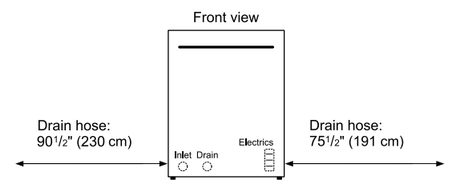

The electrical junction box and water inlet are at the front of the appliance, the drain at the rear.

Plumbing

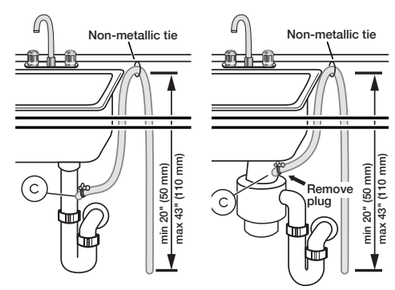

Note: Plumbing installations will vary - refer to local codes. Drain hose included is 90 1/2" (230 cm) and can be extended to a maximum of 168 1/2" (428 cm).

Always use the approved drain hose extension kit (SGZ1010UC).

Ensure a portion of the drain hose is raised between min. 20" (50 cm) and max. 43" (110 cm) above the cabinet floor.

Example of Hardwire Installation

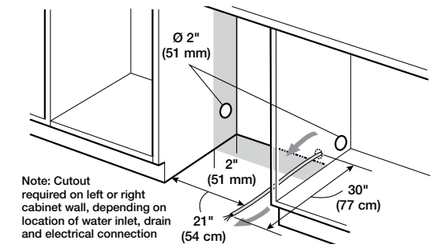

Example of Electrical Receptacle Installation

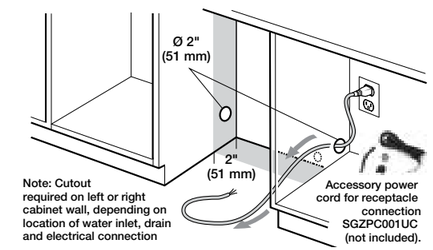

Included Parts & Accessories

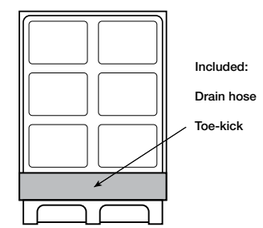

300 Series / DLX Dishwashers

5
2
6

300 Series
*SHEM63W5_N
*SHSM63W5_N
SHXM63W55N
SHVM63W53N

+44 dBA
+Standard 3rd Rack
+FlexSpace™ Tines
+Speed60®
+16 Place Settings
+24/7 AquaStop®

300 Series
SHXM63WS5N

+Water Softener
+Touch Control

5
2
6

300 Series DLX
*SHS863WD_N
SHX863WD5N
SHV863WD3N

+ExtraScrub Option
+DoubleFlex Silverware Basket

+Indicates a step-up feature
* Multiple colors available. See color chips to fill in missing digit.

	300 Series	300 Series	300 Series DLX
	Recessed Handle – SHEM63W5_N Scoop Handle – SHSM63W5_N Bar Handle – SHXM63W55N Custom Panel – SHVM63W53N	Bar Handle – SHXM63WS5N	Scoop Handle – SHS863WD_N Bar Handle – SHX863WD5N Custom Panel – SHV863WD3N
General Properties			
Number of wash cycles / options	5 / 4	5 / 4	5 / 5
dBA	44	44	44
Third rack	Standard 3rd rack	Standard 3rd rack	Standard 3rd rack
Rack adjustability	RackMatic®	RackMatic®	RackMatic®
Tub material	Stainless steel	Stainless steel	Stainless steel
Control type	Buttons	Touch control	Buttons
Concealed heating element	Yes	Yes	Yes
Leak protection system	24/7 AquaStop®	24/7 AquaStop®	24/7 AquaStop®
Water softener	No	Yes	No
Five-level wash	Yes	Yes	Yes
ChildLock	Recessed handle model only	No	No
InfoLight®	Scoop / bar handle and custom panel models only	Yes	Yes
Special features	Extra dry option, Speed60®	InfoLight®, water softener	InfoLight®, extra dry option
Efficiency and Capacity			
Water usage per cycle	3.5	3.5	3.5
Energy efficiency class	Tier 1	Tier 1	Tier 1
ENERGY STAR® qualified	Yes	Yes	Yes
Total annual energy / water consumption	269 kWh / 623.5 g	269 kWh / 623.5 g	269 kWh / 623.5 g
Number of place settings	16	16	16
Technical Data			
Watts (W)	1440 W	1440 W	1440 W
Current (A) / Volts (V) / Frequency (Hz)	12 A / 120 V / 60 Hz	12 A / 120 V / 60 Hz	12 A / 120 V / 60 Hz
Power cord length	N/A	N/A	N/A
Minimum water pressure (lb / sin)	14	14	14
Length outlet hose (in)	79"	79"	79"
Dimensions & Weight			
Overall appliance dimensions (HxWxD) (in)	33 7/8" x 23 9/16" x 23 3/4" (Custom panel D: 23 1/16")	33 7/8" x 23 9/16" x 23 3/4"	33 7/8" x 23 9/16" x 23 1/16"
Required cutout size (HxWxD) (in)	33 7/8" x 23 5/8" x 24"	33 7/8" x 23 5/8" x 24"	33 7/8" x 23 5/8" x 24"
Adjustable feet	Yes	Yes	Yes
Net weight (lbs)	91 / 91 / 91 / 88 lbs	95 lbs	91 / 88 lbs

Optional Accessories

SGZ9091UC
Softener Salt (4.4 lbs)

SMZPC002UC
Power Cord with Cold Plug

SMZSH002UC
Bosch Dishwasher Water Supply Hose

SMZPCSH2UC
Bosch Dishwasher Water Supply Hose & Accessory Power Cord (Rear Connection)

SGZ1010UC
Drain Hose Extension 76 3/4"

300 Series / DLX Dishwashers

Dimensions and Cutout

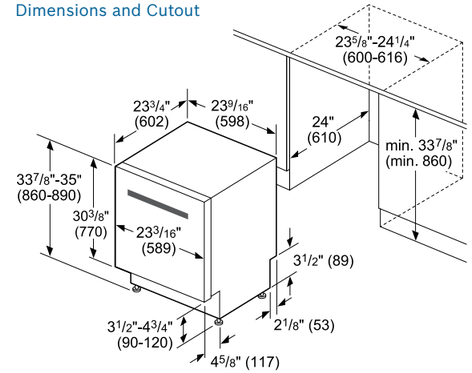

Custom Panel – Dimensions and Cutout

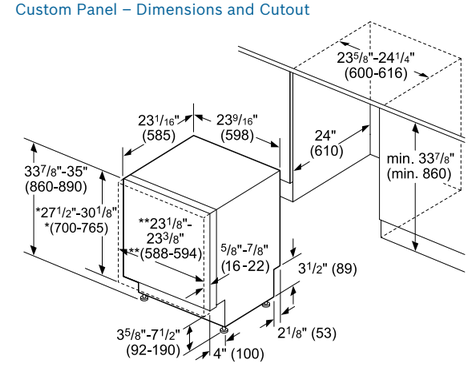

* measured from the bottom edge of the countertop panel thickness recommended 3/4" (20 mm).
This dishwasher can accept custom door panel weights ranging from 7 to 24 lbs; however, the dishwasher comes from the factory ready for custom panel door weights from 11 to 18 lbs.
If you plan on using a door panel that is not 11 to 18 lbs. please contact customer service at (800) 944-2904.

** 24" (610 mm) wide panel may be used depending on cabinet design

Note: Refer to installation template for mounting hardware locations
measurements in inches (mm)

Example of Hardwire Installation

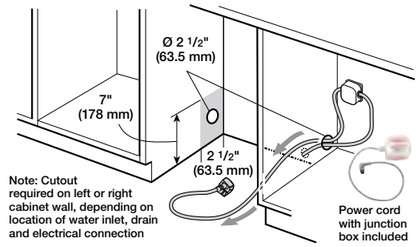

Example of Electrical Receptacle Installation

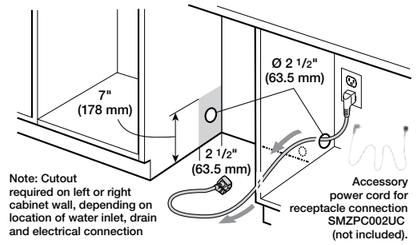

Water and Electrical Locations

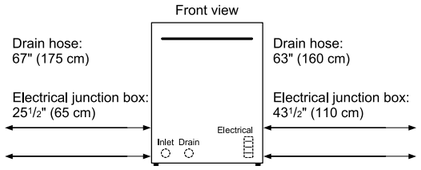

All connections are at the rear of the appliance.
Extension for drain hose available as accessory.
Power cord for connection to electrical outlet (3-prong plug) available as accessory.

Plumbing

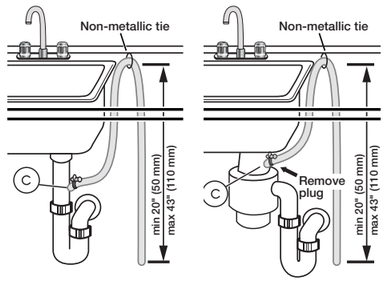

Note: Plumbing installations will vary - refer to local codes. Drain hose included is 79 (201 cm) and can be extended to a maximum of 155 3/4" (396 cm).

Always use the approved drain hose extension kit (SGZ1010UC).

Ensure a portion of the drain hose is raised between min. 20" (50 cm) and max. 43" (110 cm) above the cabinet floor.

Included Parts & Accessories

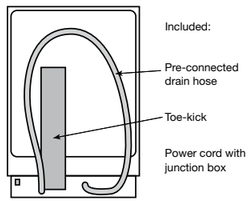

Optional Accessories Continued

SMZ1007UC
Stainless Steel Bosch Dishwasher Bar Handle

SMZ5000
Accessory Kit: Extra Tall Item Sprinkler, Vase and Bottle Holder, 3 Plastic Item Clips and Small Item Basket

SMZ4000UC
Silverware Basket US Duo

SMZ5002UC
Anti-Tarnish Silverware Cassette

500 Series / DLX Dishwashers

5
2
6

500 Series
*SHPM65W5_N
SHXM65W55N

- 44dBA
- + Pocket Handle Design
- + Flexible 3rd Rack
- + EasyGlide™ Rack System Upper Rack

5
2
6

500 Series DLX
*SHP865WD_N

- + ExtraScrub Option
- + DoubleFlex Silverware Basket

+ Indicates a step-up feature
* Multiple colors available. See color chips to fill in missing digit.

	500 Series	500 Series DLX
	Pocket Handle – SHPM65W5_N Bar Handle – SHXM65W55N	Pocket Handle – SHP865WD_N
General Properties		
Number of wash cycles / options	5 / 5	5 / 5
dBA	44	44
Third rack	Flexible 3rd rack	Flexible 3rd rack
Rack adjustability	RackMatic®	RackMatic®
Tub material	Stainless steel	Stainless steel
Control type	Buttons	Buttons
Concealed heating element	Yes	Yes
Leak protection system	24/7 AquaStop®	24/7 AquaStop®
Water softener	No	No
Five-level wash	Yes	Yes
ChildLock	No	No
TFT display	No	No
InfoLight®	Yes	Yes
Special features	InfoLight®, extra dry option	InfoLight®, extra dry option
Efficiency and Capacity		
Water usage per cycle	2.9	2.9
Energy efficiency class	Tier 1	Tier 1
ENERGY STAR® qualified	Yes	Yes
Total annual energy / water consumption	269 kWh / 623.5 g	269 kWh / 623.5 g
Number of place settings	16	16
Technical Data		
Watts (W)	1440 W	1440 W
Current (A) / Volts (V) / Frequency (Hz)	12 A / 120 V / 60 Hz	12 A / 120 V / 60 Hz
Power cord length	N/A	N/A
Minimum water pressure (lb / sin)	14	14
Length outlet hose (in)	79"	79"
Dimensions & Weight		
Overall appliance dimensions (HxWxD) (in)	33 7/8" x 23 9/16" x 23 3/4"	33 7/8" x 23 9/16" x 23 3/4"
Required cutout size (HxWxD) (in)	33 7/8" x 23 5/8" x 24"	33 7/8" x 23 5/8" x 24"
Adjustable feet	Yes	Yes
Net weight (lbs)	91 lbs	91 lbs

Optional Accessories

SMZPC002UC Power Cord with Cold Plug	SMZSH002UC Bosch Dishwasher Water Supply Hose	SMZPCSH2UC Bosch Dishwasher Water Supply Hose & Accessory Power Cord (Rear Connection)	SGZ1010UC Drain Hose Extension 76 3/4"	SMZ5000 Accessory Kit: Extra Tall Item Sprinkler, Vase and Bottle Holder, 3 Plastic Item Clips and Small Item Basket	SMZ5002UC Anti-Tarnish Silverware Cassette

500 Series / DLX Dishwashers

Dimensions and Cutout

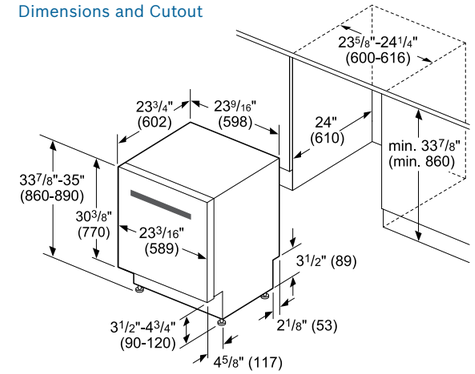

measurements in inches (mm)

Plumbing

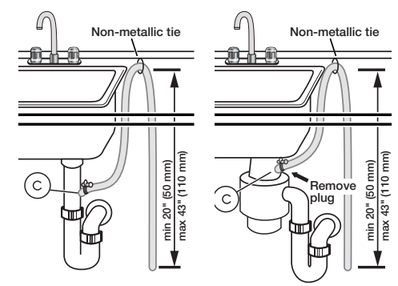

Note: Plumbing installations will vary - refer to local codes. Drain hose included is 79 (201 cm) and can be extended to a maximum of 155 3/4" (396 cm).

Always use the approved drain hose extension kit (SGZ1010UC).

Ensure a portion of the drain hose is raised between min. 20" (50 cm) and max. 43" (110 cm) above the cabinet floor.

Included Parts & Accessories

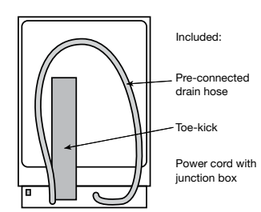

Example of Hardwire Installation

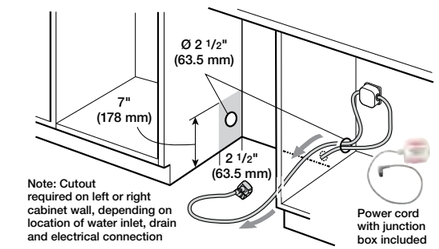

Example of Electrical Receptacle Installation

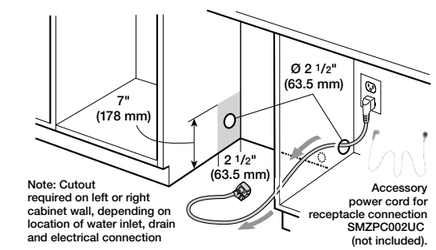

Water and Electrical Locations

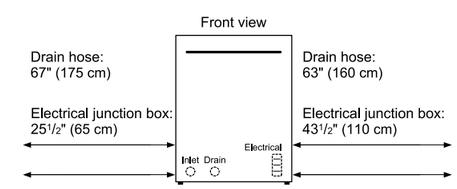

All connections are at the rear of the appliance.
Extension for drain hose available as accessory.
Power cord for connection to electrical outlet (3-prong plug) available as accessory.

800 Series / DLX Dishwashers

5
2
6
4**
Black Stainless Steel

800 Series
*SHEM78W5_N
*SHPM78W5_N
*SHXM78W5_N
SHVM78W53N

+42 dBA
+Touch Control Technology
+6 Cycles / 5 Options

5
2
6

800 Series DLX
*SHE878WD_N
*SHP878WD_N
*SHX878WD_N
SHV878WD3N

+ExtraScrub Option
+DoubleFlex Silverware Basket

800 Series Premium
SHPM98W75N
SHXM98W75N
SHVM98W73N

+39 dBA (Custom Panel Model is 40 dBA)
+MyWay® Rack
+6 Cycles / 6 Options

+Indicates a step-up feature
* Multiple colors available. See color chips to fill in missing digit.
**Black Stainless Steel available only on pocket handle model

	800 Series	800 Series DLX	800 Series Premium
	Recessed Handle – SHEM78W5_N Pocket Handle – SHPM78W5_N Bar Handle – SHXM78W5_N Custom Panel – SHVM78W53N	Recessed Handle – SHE878WD_N Pocket Handle – SHP878WD_N Bar Handle – SHX878WD_N Custom Panel – SHV878WD3N	Pocket Handle – SHPM98W75N Bar Handle – SHXM98W75N Custom Panel – SHVM98W73N
General Properties			
Number of wash cycles / options	6 / 5	6 / 6	6 / 6
dBA	42	42	39 / 39 / 40
Third rack	Flexible 3rd rack	Flexible 3rd rack	MyWay® Rack
Rack adjustability	RackMatic®	RackMatic®	RackMatic®
Tub material	Stainless steel	Stainless steel	Stainless steel
Control type	Touch control	Touch control	Touch control
Concealed heating element	Yes	Yes	Yes
Leak protection system	24/7 AquaStop®	24/7 AquaStop®	24/7 AquaStop®
Water softener	No	No	No
Five-level wash	Yes	Yes	Yes
ChildLock	Recessed handle model only	Recessed handle model only	No
InfoLight®	Pocket, bar handle and custom panel models only	Pocket, bar handle and custom panel models only	Yes
Special features	Extra dry option	InfoLight®, extra dry option	InfoLight®, extra dry option
Efficiency and Capacity			
Water usage per cycle	2.9	2.9	2.9
Energy efficiency class	Tier 1	Tier 1	Tier 1
ENERGY STAR® qualified	Yes	Yes	Yes
Total annual energy / water consumption	269 kWh / 623.5 g	269 kWh / 623.5 g	269 kWh / 623.5 g
Number of place settings	16	16	16
Technical Data			
Watts (W)	1440 W	1440 W	1440 W
Current (A) / Volts (V) / Frequency (Hz)	12 A / 120 V / 60 Hz	12 A / 120 V / 60 Hz	12 A / 120 V / 60 Hz
Power cord length	N/A	N/A	N/A
Minimum water pressure (lb / sin)	14	14	14
Length outlet hose (in)	79"	79"	79"
Dimensions & Weight			
Overall appliance dimensions (HxWxD) (in)	33 7/8" x 23 9/16" x 23 3/4" (Custom panel D: 23 1/16")	33 7/8" x 23 9/16" x 23 3/4" (Custom panel D: 23 1/16")	33 7/8" x 23 9/16" x 23 3/4" (Custom panel D: 23 1/16")
Required cutout size (HxWxD) (in)	33 7/8" x 23 5/8" x 24"	33 7/8" x 23 5/8" x 24"	33 7/8" x 23 5/8" x 24"
Adjustable feet	Yes	Yes	Yes
Net weight (lbs)	92 / 92 / 92 / 89 lbs	92 / 89 lbs	105 / 105 / 102 lbs

Optional Accessories

SMZPC002UC
Power Cord with Cold Plug

SMZSH002UC
Bosch Dishwasher Water Supply Hose

SMZPCSH2UC
Bosch Dishwasher Water Supply Hose & Accessory Power Cord (Rear Connection)

SGZ1010UC
Drain Hose Extension 76 3/4"

800 Series / DLX Dishwashers

Dimensions and Cutout

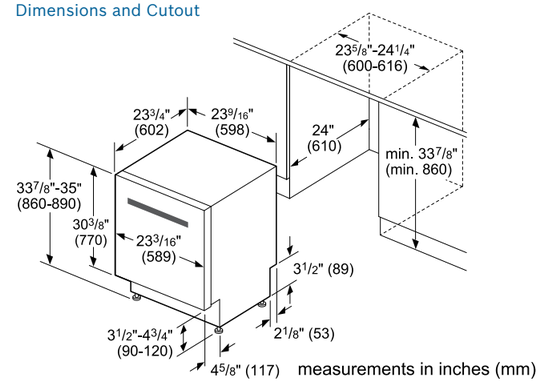

Custom Panel – Dimensions and Cutout

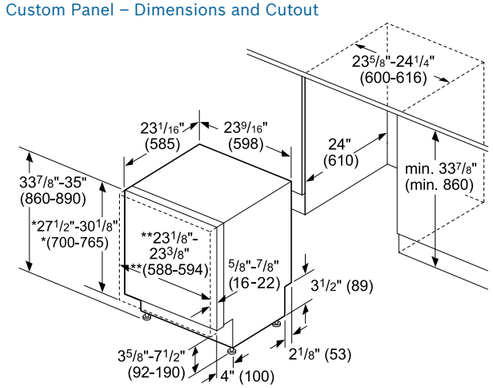

* measured from the bottom edge of the countertop panel thickness recommended 3/4" (20 mm).
This dishwasher can accept custom door panel weights ranging from 7 to 24 lbs; however, the dishwasher comes from the factory ready for custom panel door weights from 11 to 18 lbs.
If you plan on using a door panel that is not 11 to 18 lbs. please contact customer service at (800) 944-2904.

** 24" (610 mm) wide panel may be used depending on cabinet design

Note: Refer to installation template for mounting hardware locations
measurements in inches (mm)

Example of Hardwire Installation

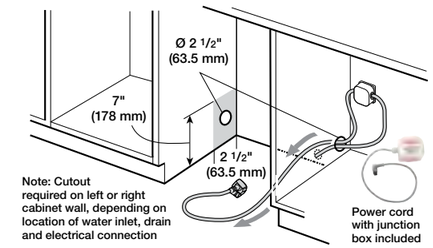

Example of Electrical Receptacle Installation

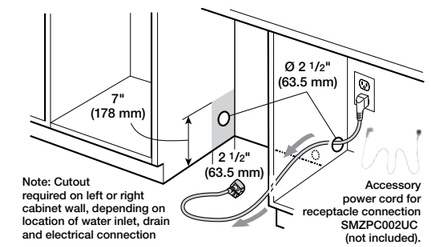

Water and Electrical Locations

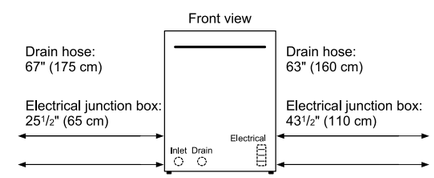

All connections are at the rear of the appliance.
Extension for drain hose available as accessory.
Power cord for connection to electrical outlet (3-prong plug) available as accessory.

Plumbing

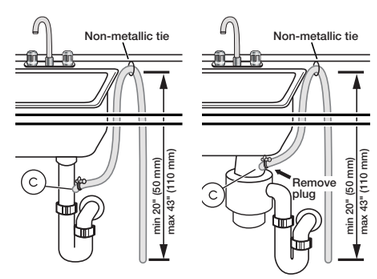

Note: Plumbing installations will vary - refer to local codes. Drain hose included is 79 (201 cm) and can be extended to a maximum of 155 3/4" (396 cm).

Always use the approved drain hose extension kit (SGZ1010UC).

Ensure a portion of the drain hose is raised between min. 20" (50 cm) and max. 43" (110 cm) above the cabinet floor.

Included Parts & Accessories

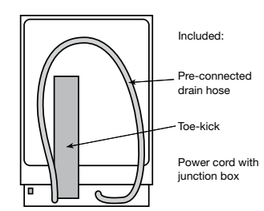

Optional Accessories Continued

SMZ5000
Accessory Kit: Extra Tall Item Sprinkler, Vase and Bottle Holder, 3 Plastic Item Clips and Small Item Basket

SMZ5002UC
Anti-Tarnish Silverware Cassette

SMZ1007UC
Stainless Steel Bosch Dishwasher Bar Handle

SMZ4026 (Small)
SMZ5400 (Large)
Silverware Insert for MyWay® Rack

800 Series Dishwasher

800 Series with Home Connect™ SHEM78WH5N

- 42 dBA
- Flexible 3rd Rack
- +Home Connect™
- +Water Softener
- +24/7 AquaStop® Plus

+Indicates a step-up feature

	800 Series with Home Connect™
	Recessed Handle – SHEM78WH5N
General Properties	
Number of wash cycles / options	8 / 7
dBA	42
Third rack	Flexible 3rd rack
Rack adjustability	RackMatic®
Tub material	Stainless steel
Control type	Touch control
Concealed heating element	Yes
Leak protection system	24/7 AquaStop® Plus
Water softener	Yes
Five-level wash	Yes
ChildLock	No
InfoLight®	No
Special features	Home Connect™ (WiFi enabled)
Efficiency and Capacity	
Water usage per cycle	2.9
Energy efficiency class	Tier 1
ENERGY STAR® qualified	Yes
Total annual energy / water consumption	239 kWh / 623.5 g
Number of place settings	16
Technical Data	
Watts (W)	1440 W
Current (A) / Volts (V) / Frequency (Hz)	12 A / 120 V / 60 Hz
Power cord length	N/A
Minimum water pressure (lb / sin)	7
Length outlet hose (in)	79"
Dimensions & Weight	
Overall appliance dimensions (HxWxD) (in)	34 1/8" x 23 9/16" x 22 7/16"
Required cutout size (HxWxD) (in)	34 1/8" x 24" x 24"
Adjustable feet	Yes
Net weight (lbs)	112.9 lbs

Optional Accessories

SGZ9091UC
Softener Salt (4.4 lbs)

SMZPC002UC
Power Cord with Cold Plug

SMZSH002UC
Bosch Dishwasher Water Supply Hose

SMZPCSH2UC
Bosch Dishwasher Water Supply Hose & Accessory Power Cord (Rear Connection)

800 Series Dishwasher

Dimensions and Cutout

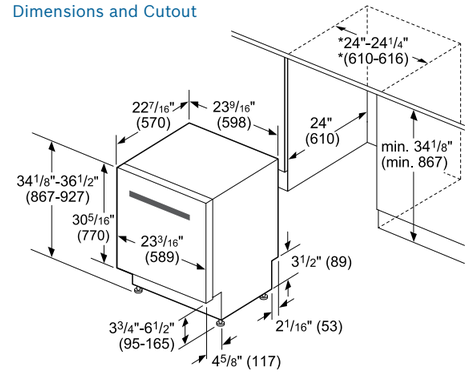

*23 5/8" (600) without decor strips measurements in inches (mm)

Plumbing

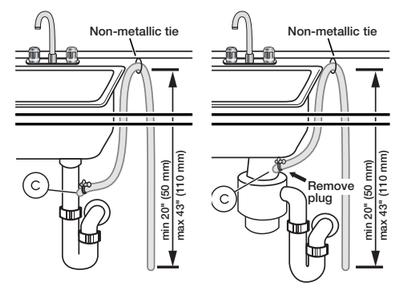

Note: Plumbing installations will vary - refer to local codes. Drain hose included is 88 5/8" (225 cm) and can be extended to a maximum of 165 3/8" (420 cm).

Always use the approved drain hose extension kit (SGZ1010UC).

Ensure a portion of the drain hose is raised between min. 20" (50 cm) and max. 43" (110 cm) above the cabinet floor.

Included Parts & Accessories

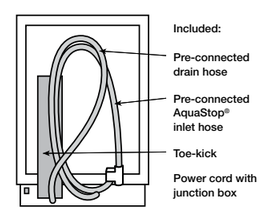

Example of Hardwire Installation

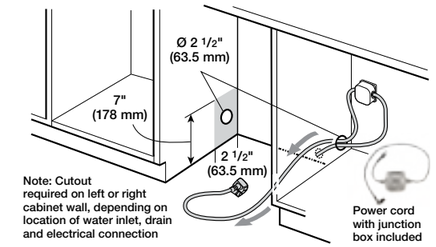

Example of Electrical Receptacle Installation

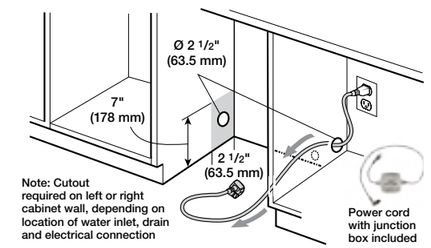

Water and Electrical Locations

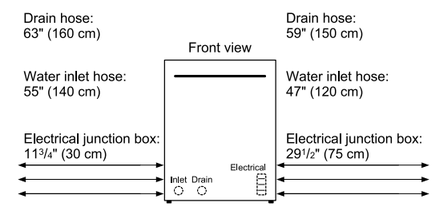

All connections are at the rear of the appliance.
Extension for drain hose available as accessory.
Power cord for connection to electrical outlet (3-prong plug) available as accessory.

Optional Accessories Continued

SGZ1010UC
Drain Hose Extension 76 3/4"

SMZ5000
Accessory Kit: Extra Tall Item Sprinkler, Vase and Bottle Holder, 3 Plastic Item Clips and Small Item Basket

SMZ5002UC
Anti-Tarnish Silverware Cassette

18-Inch ADA Special Application Dishwashers

5

2

6

18-Inch ADA 300 Series
*SPE53U5_UC

- 46 dBA
- 4 Cycles / 4 Options
- Water Softener
- 24/7 AquaStop® Plus
- Delay Start Timer

18-Inch ADA 800 Series
SPE68U55UC
SPX68U55UC
SPV68U53UC

- +44 dBA
- +6 Cycles / 5 Options
- Standard 3rd Rack
- +Eco Cycle

+ Indicates a step-up feature
* Multiple colors available. See color chips to fill in missing digit.

	18-Inch ADA 300 Series	18-Inch ADA 800 Series
	Recessed Handle – SPE53U5_UC	Recessed Handle – SPE68U55UC Bar Handle – SPX68U55UC Custom Panel – SPV68U53UC
General Properties		
Number of wash cycles / options	4 / 4	6 / 5
dBA	46	44
Third rack	No	Standard 3rd rack
Rack adjustability	RackMatic®	RackMatic®
Tub material	Stainless steel	Stainless steel
Control type	Buttons	Buttons
Concealed heating element	Yes	Yes
Leak protection system	24/7 AquaStop® Plus	24/7 AquaStop® Plus
Water softener	Yes	Yes
Five-level wash	Yes	Yes
ChildLock	Yes	Recessed handle model only
InfoLight®	No	Bar handle / custom panel only
Special features	24h Delay start timer	InfoLight®, Eco Cycle
Efficiency and Capacity		
Water usage per cycle	3.0	3.0
Energy efficiency class	Tier 1	Tier 1
ENERGY STAR® qualified	Yes	Yes
Total annual energy / water consumption	259 kWh / 645 g	259 kWh / 645 g
Number of place settings	9	10
Technical Data		
Watts (W)	1300 W	1300 W
Current (A) / Volts (V) / Frequency (Hz)	12 A / 120 V / 60 Hz	12 A / 120 V / 60 Hz
Power cord length	47 1/4"	47 1/4"
Minimum water pressure (lb / sin)	7	7
Length inlet / outlet hose (in)	65" / 80 5/8"	65" / 80 5/8"
Dimensions & Weight		
ADA Compliant	Yes	Yes
Overall appliance dimensions (HxWxD) (in)	32 1/16" x 17 5/8" x 22 9/16"	Recessed handle: 32 1/16" x 17 5/8" x 22 9/16" (Bar handle D: 22 7/16", Custom panel D: 21 5/8")
Required cutout size (HxWxD) (in)	32 1/8" x 17 3/4" x 24"	32 1/8" x 17 3/4" x 24" (Custom panel D: 22 7/16")
Adjustable feet	Yes	Yes
Net weight (lbs)	72 lbs	76 / 79 / 75 lbs

Optional Accessories

SGZ9091UC
Softener Salt (4.4 lbs)

SMZSH002UC
Bosch Dishwasher Water Supply Hose

SMZPCSH2UC
Bosch Dishwasher Water Supply Hose & Accessory Power Cord (Rear Connection)

SGZ1010UC
Drain Hose Extension 76 3/4"

18-Inch ADA Special Application Dishwashers

Dimensions and Cutout

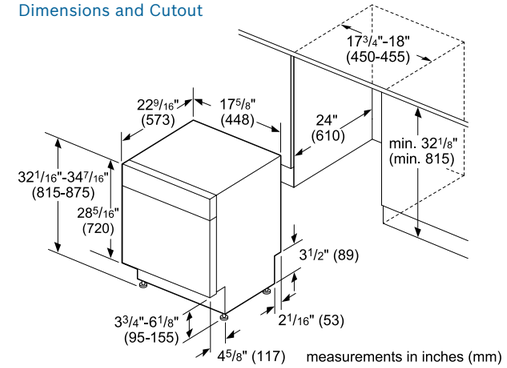

Custom Panel – Dimensions and Cutout

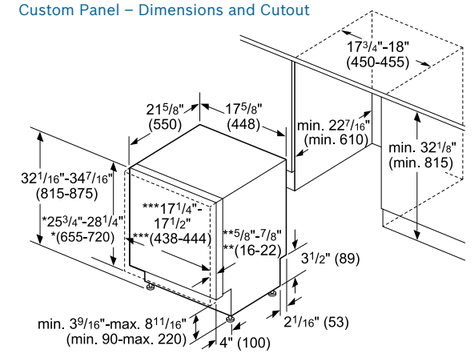

* measured from the bottom edge of the countertop panel
** panel weight 6-16 lb (2.5-7.5 kg)
*** 18" (450 mm) wide panel may be used depending on cabinet design
Note: Refer to installation template for mounting hardware locations
measurements in inches (mm)

Example of Hardwire Installation

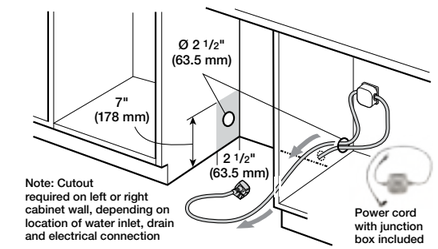

Example of Electrical Receptacle Installation

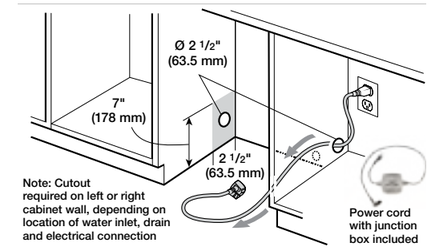

Water and Electrical Locations

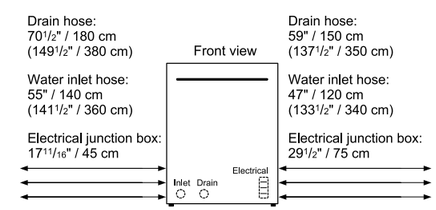

All connections at the rear of the appliance.
( ) values with extension kit.

Plumbing

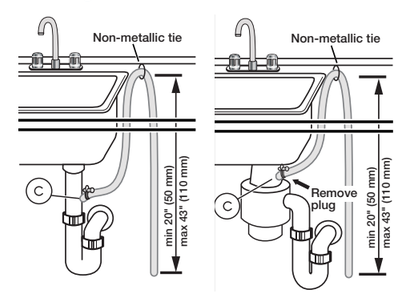

Note: Plumbing installations will vary - refer to local codes. Drain hose included is 88 5/8" (225 cm) and can be extended to a maximum of 165 3/8" (420 cm).

Always use the approved drain hose extension kit (SGZ1010UC).

Ensure a portion of the drain hose is raised between min. 20" (50 cm) and max. 43" (110 cm) above the cabinet floor.

Included Parts & Accessories

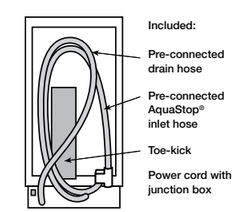

Optional Accessories Continued

SMZ1007UC
Stainless Steel Bosch Dishwasher Bar Handle

SMZ5000
Accessory Kit: Extra Tall Item Sprinkler, Vase and Bottle Holder, 3 Plastic Item Clips and Small Item Basket

SMZ5003
Hinge for 4" Toekick Height Installation

24-Inch ADA Special Application Dishwashers

5

2

6

24-Inch ADA 300 Series
*SGE53X5_UC

- 46 dBA
- 4 Cycles / 4 Options
- Water Softener
- 24/7 AquaStop® Plus
- Delay Start Timer

24-Inch ADA 800 Series
SGE68X55UC
SGX68U55UC
SGV68U53UC

- +44 dBA
- +6 Cycles / 5 Options
- +Standard 3rd Rack
- +Eco Cycle

+Indicates a step-up feature
* Multiple colors available. See color chips to fill in missing digit.

	24-Inch ADA 300 Series	24-Inch ADA 800 Series
	Recessed Handle – SGE53X5_UC	Recessed Handle – SGE68X55UC Bar Handle – SGX68U55UC Custom Panel – SGV68U53UC
General Properties		
Number of wash cycles / options	4 / 4	6 / 5
dBA	46	44
Third rack	No	Standard 3rd rack
Rack adjustability	RackMatic®	RackMatic®
Tub material	Stainless steel	Stainless steel
Control type	Buttons	Buttons
Concealed heating element	Yes	Yes
Leak protection system	24/7 AquaStop® Plus	24/7 AquaStop® Plus
Water softener	Yes	Yes
Five-level wash	Yes	Yes
ChildLock	Yes	Recessed handle model only
InfoLight®	No	Bar handle / custom panel only
Special features	24h Delay start timer	Eco Cycle
Efficiency and Capacity		
Water usage per cycle	3.0	3.0
Energy efficiency class	Tier 1	Tier 1
ENERGY STAR® qualified	Yes	Yes
Total annual energy / water consumption	259 kWh / 645 g	259 kWh / 645 g
Number of place settings	14	15
Technical Data		
Watts (W)	1300 W	1300 W
Current (A) / Volts (V) / Frequency (Hz)	12 A / 120 V / 60 Hz	12 A / 120 V / 60 Hz
Power cord length	47 1/4"	47 1/4"
Minimum water pressure (lb / sin)	7	7
Length inlet / outlet hose (in)	65" / 74 7/8"	65" / 74 7/8"
Dimensions & Weight		
ADA compliant	Yes	Yes
Overall appliance dimensions (HxWxD) (in)	32 1/16" x 23 9/16" x 22 9/16"	32 1/16" x 23 9/16" x 22 9/16" (Custom panel D: 21 5/8")
Required cutout size (HxWxD) (in)	32 1/8" x 24" x 24"	32 1/8" x 24" x 24"
Adjustable feet	Yes	Yes
Net weight (lbs)	84 lbs	89 / 92 / 87 lbs

Optional Accessories

SGZ9091UC
Softener Salt (4.4 lbs)

SMZSH002UC
Bosch Dishwasher Water Supply Hose

SMZPCSH2UC
Bosch Dishwasher Water Supply Hose & Accessory Power Cord (Rear Connection)

SGZ1010UC
Drain Hose Extension 76 3/4"

24-Inch ADA Special Application Dishwashers

Dimensions and Cutout

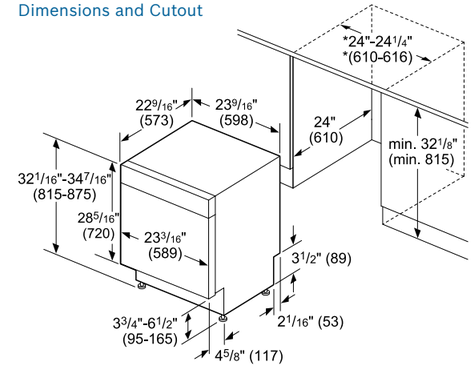

* 23 5/8" (600) without decor strips

measurements in inches (mm)

Custom Panel – Dimensions and Cutout

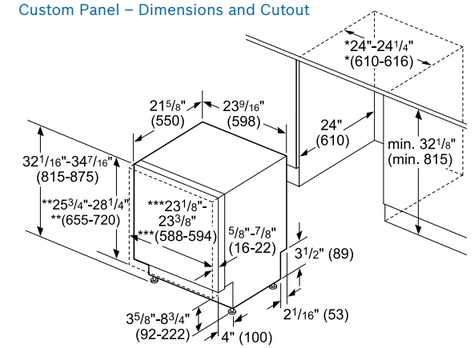

* 23 5/8" (600 mm) without decor strips
** measured from the bottom edge of the countertop panel thickness recommended 3/4" (20 mm), panel weight 6-18 lbs (2.5-8.5 kg)
*** 24" (610 mm) wide panel may be used depending on cabinet design

measurements in inches (mm)

Example of Hardwire Installation

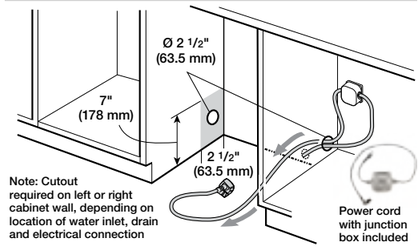

Example of Electrical Receptacle Installation

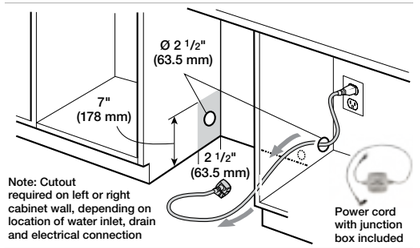

Water and Electrical Locations

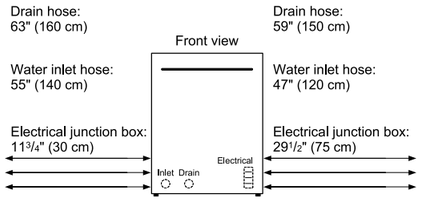

All connections are at the rear of the appliance.
Extension for drain hose available as accessory.
Power cord for connection to electrical outlet (3-prong plug) available as accessory.

Plumbing

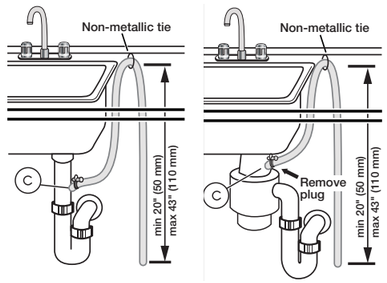

Note: Plumbing installations will vary - refer to local codes. Drain hose included is 88 5/8" (225 cm) and can be extended to a maximum of 165 3/8" (420 cm).

Always use the approved drain hose extension kit (SGZ1010UC).

Ensure a portion of the drain hose is raised between min. 20" (50 cm) and max. 43" (110 cm) above the cabinet floor.

Included Parts & Accessories

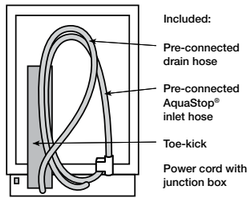

Optional Accessories Continued

SMZ1007UC
Stainless Steel Bosch Dishwasher Bar Handle

SMZ5000
Accessory Kit: Extra Tall Item Sprinkler, Vase and Bottle Holder, 3 Plastic Item Clips and Small Item Basket

SMZ5002UC
Anti-tarnish Silverware Cassette

Refrigerators

Healthy living starts with consuming fresh ingredients, and our Bosch refrigerators are designed to keep foods at their optimal freshness, maintaining their intended nutrients and flavor. Bosch refrigerators feature VitaFresh® to preserve your favorite foods, by keeping fruits and vegetables fresher, longer. Bosch refrigerators blend peacefully into any kitchen space and install as flush, counter or standard depths. Thoughtful features like premium tempered glass, hidden hinges and crisp LED lighting reveal a tangible level of quality enjoyed with everyday use.

Benchmark® Series Refrigerators

Beautiful flush design

Bosch built-in refrigerators offer the ultimate integrated look for your kitchen. The unique Optiflex® hinge design allows for flush installation, for full integration with your kitchen cabinets.

VitaFresh system

Industry leading VitaFresh system is designed to extend the preservation of your food with precise temperature and humidity control.

Bright interior lighting

Our redesigned vertical LED lighting bars clearly illuminate refrigerator contents.

Dual compressors & evaporators

Bosch built-in refrigerators feature a separate compressor and evaporator in the refrigerator and freezer sections, optimizing freshness. Not only does it provide more accurate temperature and humidity control, it also helps to prevent freezer burn and odor transfer.

ENERGY STAR® qualified

Our energy efficient Benchmark® Series refrigerators are designed to use less energy without sacrificing features.

Benchmark® Series Built-in Single Door Refrigerator / Freezer

Benchmark® Series
B30IR900SP
30" Built-in Custom Panel Single Door Refrigerator

- 29 3/4" x 84"
- Custom Panel Ready
- Installs Either Completely Flush or Framed
- Home Connect™
- LED Sidewall and Theater Lighting
- Optiflex® Hinge

Benchmark® Series
B18IF900SP
18" Built-in Custom Panel Single Door Freezer

- 17 3/4" x 84"
- Custom Panel Ready
- Installs Either Completely Flush or Framed
- Home Connect™
- All-LED Sidewall and Theater Lighting
- Optiflex® Hinge

	Benchmark® Series 30" Single Door Refrigerator	Benchmark® Series 18" Single Door Freezer
	Custom Panel – B30IR900SP	Custom Panel – B18IF900SP
General Properties		
Home Connect™ (Wi-Fi Enabled)	Yes	Yes
Reversible door hinge	Yes	Yes
Water filter	No	Yes
Lighting	LED sidewall and theater lighting	All-LED sidewall and theater lighting
Defrost process	Frost-free	Automatic
Number of shelves	7	6
Number of drawers	3	2
Shelf material	Glass w/metal trim	Glass w/metal trim, metal bin
Type of shelves	3 adjustable, 4 full width	2 adjustable, 4 full width
Number of Drawers	3	2
Gallon storage bins	Yes	N/A
Humidity control drawer	Yes	N/A
Ice maker	No	Yes
Quick ice	No	Yes
Capacity		
Total capacity (cu. ft.)	16.8 cu. ft.	8.6 cu. ft.
Technical Details		
Watts (W)	180 W	367 W
Current (A)	15 A	15 A
Volts (V)	120 V	120 V
Frequency (Hz)	60 Hz	60 Hz
Power cord length (in.)	118"	118"
Plug type	3-Prong	3-Prong
Dimensions & Weight		
Appliance dimensions (HxWxD) (in.)	84" x 29 3/4" x 24 3/4"	84" x 17 3/4" x 24 3/4"
Required cutout size (HxWxD) (in.)	84" x 30" x 24 3/4" or 25"	84" x 18" x 24 3/4" or 25"
Net weight (lbs)	261 lbs	332 lbs
Efficiency		
ENERGY STAR® qualified	Yes	Yes
Energy consumption (kWh / yr)	310 kWh	443 kWh

Benchmark® Series Built-in Single Door Refrigerator / Freezer

B30IR900SP Dimensions

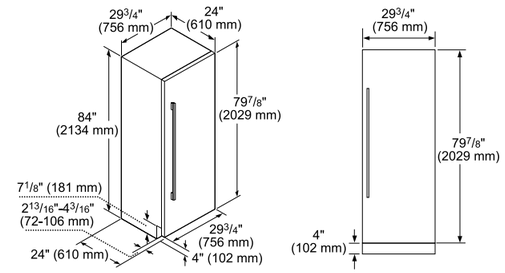

B18IF900SP Dimensions

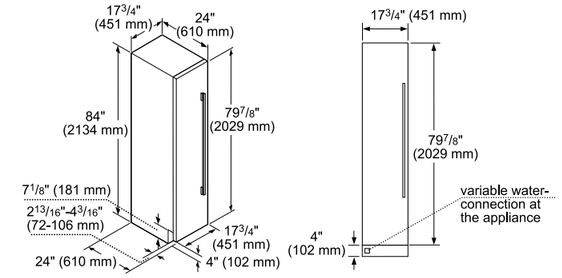

B30IR900SP Dimensions (Overhead View)

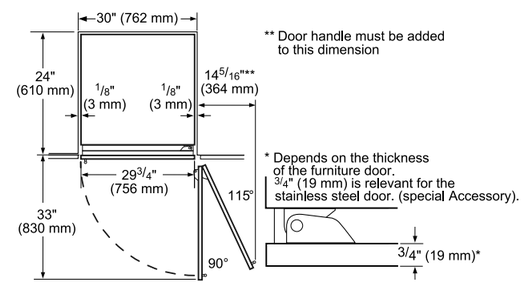

B18IF900SP Dimensions (Overhead View)

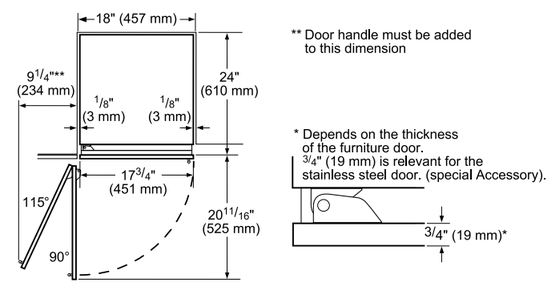

B30IR900SP Installation

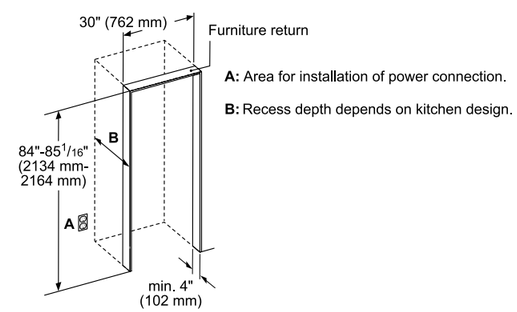

B18IF900SP Installation

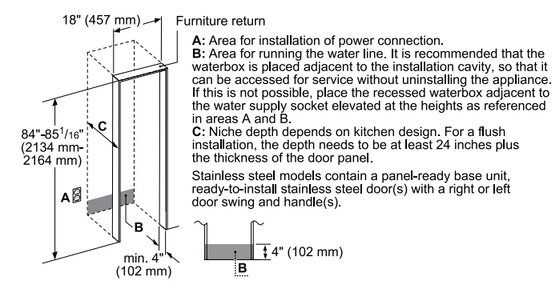

IMPORTANT: Handleless Panels should not be installed on units without the soft close capability. If you are uncertain if you have a refrigeration unit with soft close capability please contact our customer team by calling 1-800-735-4328.

Benchmark® Series Built-in Bottom Freezer Refrigerators

Benchmark® Series
B30BB930SS Flat Stainless Panel
Bottom Freezer

- 29 3/4" x 84" Flat Stainless Panel
- Flush Installation
- Dual Evaporators
- Home Connect™
- Sidewall LED Lighting
- Optiflex® Hinge

Benchmark® Series
B30IB900SP Custom Panel
Bottom Freezer

- 29 3/4" x 84"
- Custom Panel Ready
- Dual Evaporators
- Home Connect™
- Sidewall LED Lighting
- Optiflex® Hinge

	Benchmark® Series 30" Flat Stainless Panel	Benchmark® Series 30" Custom Panel
	Stainless Steel – B30BB930SS	Custom Panel – B30IB900SP
General Properties		
Home Connect™ (Wi-Fi Enabled)	Yes	Yes
Reversible door hinge	Yes	Yes
Water filter	Yes	Yes
Lighting	LED side wall theater	LED side wall theater
Defrost process refrigerator section	Frost-free	Frost-free
Number of shelves – refrigerator	3	3
Adjustable shelves – refrigerator	2	2
Shelf material – refrigerator	Glass w/metal trim	Glass w/metal trim
Type of shelves – refrigerator	Full width	Full width
Gallon storage bins	1	1
Humidity control drawer	Yes – 1	Yes – 1
Defrost process freezer section	Automatic	Automatic
Number of drawers – freezer	2	2
Ice maker	Yes	Yes
Quick ice	No	No
Capacity		
Total capacity (cu. ft.)	16 cu. ft.	16 cu. ft.
Technical Details		
Watts (W)	588 W	588 W
Current (A)	15 A	15 A
Volts (V)	120 V	120 V
Frequency (Hz)	60 Hz	60 Hz
Power cord length (in.)	118"	118"
Plug type	120V-3 prong	120V-3 prong
Dimensions & Weight		
Appliance dimensions (HxWxD) (in.)	84" x 29 3/4" x 24"	84" x 29 3/4" x 24"
Required cutout size (HxWxD) (in.)	84" x 30" x 25"	84" x 30" x 25"
Net weight (lbs)	439 lbs	395 lbs
Efficiency		
ENERGY STAR® qualified	Yes	Yes
Energy consumption (kWh / yr)	546 kWh	546 kWh

Benchmark® Series Built-in Bottom Freezer Refrigerators

30" Built-in Bottom Freezer Dimensions

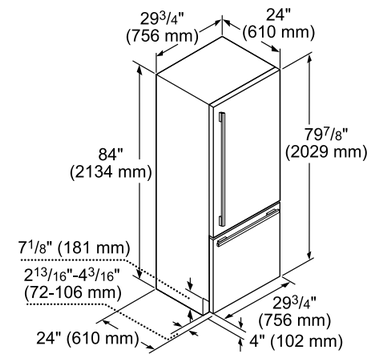

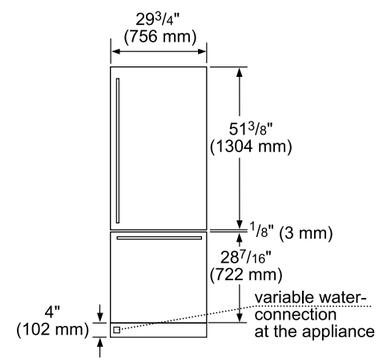

B30BB930SS Dimensions (Overhead View)

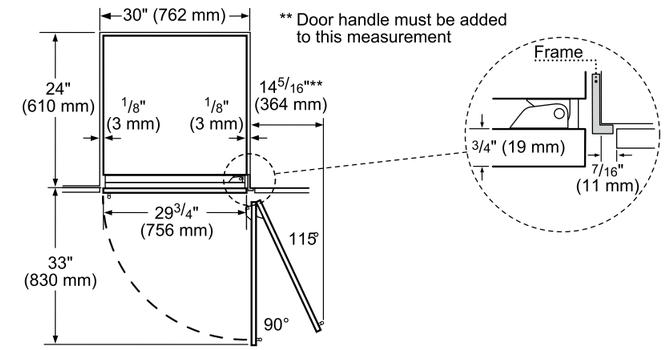

B30IB900SP Dimensions (Overhead View)

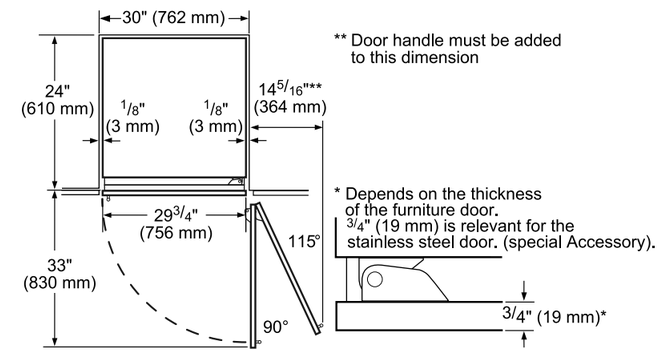

30" Built-in Bottom Freezer Installation

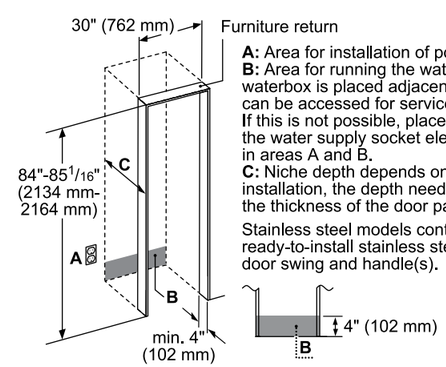

A: Area for installation of power connection.
B: Area for running the water line. It is recommended that the waterbox is placed adjacent to the installation cavity, so that it can be accessed for service without uninstalling the appliance. If this is not possible, place the recessed waterbox adjacent to the water supply socket elevated at the heights as referenced in areas A and B.
C: Niche depth depends on kitchen design. For a flush installation, the depth needs to be at least 24 inches plus the thickness of the door panel.

Stainless steel models contain a panel-ready base unit, ready-to-install stainless steel door(s) with a right or left door swing and handle(s).

IMPORTANT: Handleless Panels should not be installed on units without the soft close capability. If you are uncertain if you have a refrigeration unit with soft close capability please contact our customer team by calling 1-800-735-4328.

Benchmark® Series Built-in French Door Refrigerators

Benchmark® Series
B36BT930NS
French Door

- 35 3/4" x 84"
- Flat Stainless Panel
- Flush Installation
- Dual Evaporators
- Home Connect™
- Sidewall LED Lighting
- Optiflex® Hinge

Benchmark® Series
B36IT900NP
French Door

- 35 3/4" x 84"
- Custom Panel Ready
- Dual Evaporators
- Home Connect™
- Sidewall LED Lighting
- Optiflex® Hinge

	Benchmark® Series 36" Flat Stainless Panel	Benchmark® Series 36" Custom Panel
	Stainless Steel – B36BT930NS	Custom Panel – B36IT900NP
General Properties		
Home Connect™ (Wi-Fi Enabled)	Yes	Yes
Water filter	Yes	Yes
Lighting	LED side wall theater	LED side wall theater
Defrost process refrigerator section	Frost-free	Frost-free
Number of shelves – refrigerator	3	3
Adjustable shelves – refrigerator	2	2
Shelf material – refrigerator	Glass w/metal trim	Glass w/metal trim
Type of shelves – refrigerator	Full width	Full width
Gallon storage bins	2	2
Humidity control drawer	Yes – 1	Yes – 1
Defrost process freezer section	Automatic	Automatic
Number of drawers – freezer	2	2
Ice maker	Yes	Yes
Quick ice	No	No
Capacity		
Total capacity (cu. ft.)	19.4 cu. ft.	19.4 cu. ft.
Technical Details		
Watts (W)	350 W	350 W
Current (A)	15 A	15 A
Volts (V)	120 V	120 V
Frequency (Hz)	60 Hz	60 Hz
Power cord length (in.)	118"	118"
Plug type	120V-3 prong	120V-3 prong
Dimensions & Weight		
Appliance dimensions (HxWxD) (in.)	84" x 35 3/4" x 24"	84" x 35 3/4" x 24"
Required cutout size (HxWxD) (in.)	84" x 36" x 25"	84" x 36" x 25"
Net weight (lbs)	540 lbs	540 lbs
Efficiency		
ENERGY STAR® qualified	Yes	Yes
Energy consumption (kWh / yr)	585 kWh	585 kWh

Benchmark® Series Built-in French Door Refrigerators

30" Built-in Dimensions

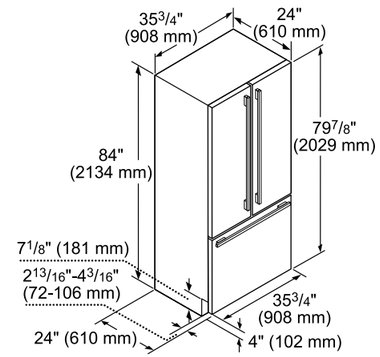

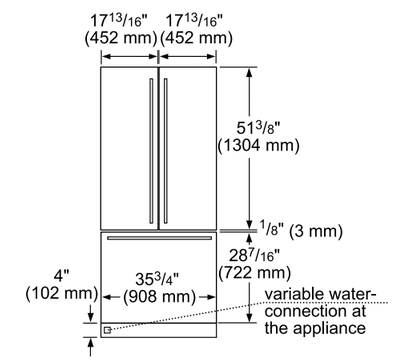

30" Built-in Dimensions (Overhead View)

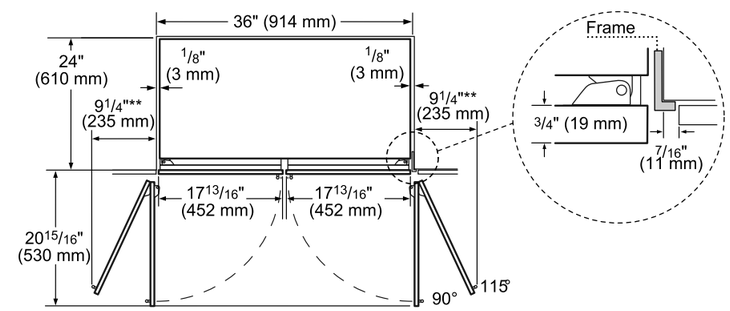

** door handle must be added to this dimension.

30" Built-in Installation

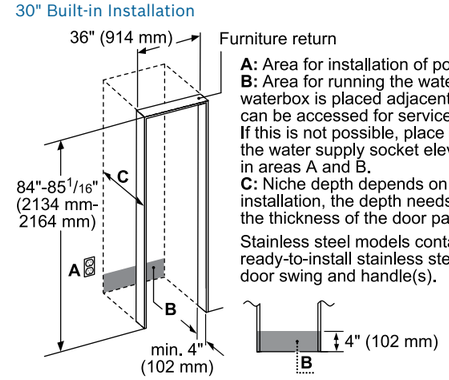

A: Area for installation of power connection.
B: Area for running the water line. It is recommended that the waterbox is placed adjacent to the installation cavity, so that it can be accessed for service without uninstalling the appliance. If this is not possible, place the recessed waterbox adjacent to the water supply socket elevated at the heights as referenced in areas A and B.
C: Niche depth depends on kitchen design. For a flush installation, the depth needs to be at least 24 inches plus the thickness of the door panel.

Stainless steel models contain a panel-ready base unit, ready-to-install stainless steel door(s) with a right or left door swing and handle(s).

IMPORTANT: Handleless Panels should not be installed on units without the soft close capability. If you are uncertain if you have a refrigeration unit with soft close capability please contact our customer team by calling 1-800-735-4328.

Planning Checklist

Benchmark® Series Built-in Refrigeration

This custom product requires attention to the finest details. Carefully review all planning information, installation details and considerations and all dimensional information.

Did you remember to...?

- ☐ Choose a desired configuration – side-by-side or stand-alone columns
- ☐ Plan the cutout height(s) – 84"
- ☐ Plan the cutout width(s) – depends on configuration and column width
- ☐ Plan the cutout depth – 25" for North American style cabinets, 24" with installation frame accessory, 24" for European style cabinets
- ☐ Ensure the cutout interior (top and sides) is flush to the appliance at a depth of min. 4", preferably 6" from face frame
- ☐ Ensure the cutout interior returns (top and sides) are finished to match exterior at a depth of min. 4", preferably 6" from face frame
- ☐ Ensure proper clearance for appliance doors including handle(s) – check for interference with other appliances, open or closed cabinets and doors, nearby walls
- ☐ Properly site the electrical outlet and (if applicable) water box
- ☐ Ensure the reverse of any custom panel is finished to match the exterior
- ☐ Choose the toekick style – stainless (included with appliance) or design custom toekick(s)
- ☐ Procure the proper installation accessories – stainless steel frame kit (FRAMKITB80) for framed installations in 24-inch deep cutouts, heater kit (HEATKITB80) for installations where two appliances are installed side-by-side or instances where any appliances are installed less than 6" apart from another but not connected. The heater kit is also recommended for use with any installation in areas that are subject to humidity, or located next to an outside wall.
- ☐ If applicable, procure the proper water filter accessories – additional replacement filters, filter by-pass for in-home water filtration system

Build Your Custom Column

Benchmark® Series Built-in Refrigeration

1 Choose Unit		2 Choose Panel	3 Choose Handle and Accessories (Units install either completely flush or framed with optional kit)
Single Door Refrigerator			
30"	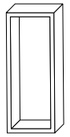 B30IR900SP Reversible Swing Custom Column	BFL30IR800 Flat Stainless Steel	00684212 36" handle, coordinates with Bosch appliances. Choose one handle for each single door unit. (Must be ordered from Service) FRAMKITB80 This accessory enables installation in 24-inch deep cutouts. Kit includes two identical and reversible vertical frames. HEATKITB80 When two single door units are installed side-by-side, this sealing kit must be used. This kit is also recommended in installations that are subject to extreme humidity.
Single Door Freezer			
18"	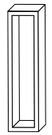 B18IF900SP Reversible Swing Internal Ice Maker Custom Column	BFL18IF800 Flat Panel Stainless Steel Custom Panel Ready	
Bottom Freezer and French Door			
30"	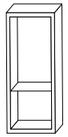 B30IB900SP 2-Door Custom Column	Custom Panel Ready	Bosch handles are included 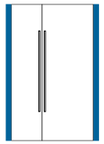 FRAMKITB80 This accessory enables installation in 24-inch deep cutouts. Kit includes two identical and reversible vertical frames.
36"	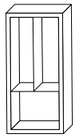 B36IT900NP French Door Custom Column	Custom Panel Ready	
Pre-Assembled Bottom Freezer and French Door			
30"	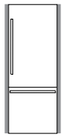 B30BB930SS 2-Door Flat Stainless Steel Panels Bosch Handles Removable Frame	Flat Stainless Steel Panels are included	Bosch handles are included A frame is attached to all pre-assembled models. It is removable if a flush installation in a 25" deep cabinet is desired.
36"	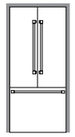 B36BT930NS French Door Flat Stainless Steel Panels Bosch Handles Removable Frame	Flat Stainless Steel Panels are included	

IMPORTANT: Use a sealing kit when connecting refrigerator and freezer columns side-by-side (included with every freezer column). Use HEATKITB80 for all non-traditional side-by-side combinations, installations where columns are not connected but less than six inches (152 mm) from one another and for any installation in areas subject to excessive humidity. See page 190 for details.

Optional Accessories and Installation Considerations

Benchmark® Series Built-in Refrigeration

Flat Stainless Steel Door Panels

Single Door Refrigerator

BFL30IR800
(For Model B30IR900SP)
30-Inch

Single Door Freezer

BFL18IF800
(For Model B18IF900SP)
18-Inch

Installation Accessories

FRAMKITB80 Frame Kit

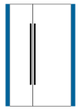

Included with all pre-assembled bottom freezers, this adjustable frame is also available as an optional accessory for use with any custom column for installation in 24-inch (610 mm) deep cutouts. The kit includes two identical and reversible metal side trims whose placement between the interior cutout wall and the appliance helps overcome the challenge of unfinished cabinet returns.

HEATKITB80 Heater Kit

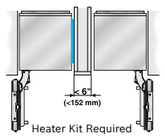

When two appliances are installed side-by-side a sealing kit must be used. For combinations that involve a freezer column, this kit is provided. For all other (non-traditional, i.e. two bottom freezers) side-by-side combinations or instances where any appliances are installed less than 6" (152 mm) apart from one another but not connected side-by-side, purchase this kit. This kit is also recommended for use with any installation in areas that are subject to extreme humidity.

Filter Accessories

BORPLFTR10 Water Filter

Replacement water filter for use in all freezer and bottom freezer models.

SCRNFLTR10 Filter By-Pass

Filter by-pass for use with existing in-home water filtration systems. For all freezer and bottom freezer models.

Handles

B36HNDL800 36-Inch Handle

Coordinates with Bosch appliances. Choose one handle for each single door unit. (Must be ordered from Service)

Location

The appliance should be installed in a dry, ventilated room. It may not be installed outdoors. The ambient temperature of the room must be between 55°F (13°C) and 100°F (43°C).

The appliance should not be exposed to constant direct sunlight or excessive heat. If installation next to a heat source, such as an oven, radiator, etc. is unavoidable, use a suitable insulating plate or observe the following minimum distances from the heat source:

– 1 1/4" (30 mm) from an electric cooking appliance,
– 11 13/16" (300 mm) from an oil or solid-fuel cooking appliance.

Installation And Cutout Dimensions

Please see pages 183, 185, 187 and 194-199 for complete cutout planning information.

It is important to observe the specified dimensions of the installation cutout for a trouble-free installation of the appliance and for the subsequent appearance of the door panel.

– In particular ensure that the cutout is square. Squareness can be checked by suitable means, e.g. spirit level, diagonal measurements, etc.
– The side walls of the cutout must be flush. The minimum thickness of the side and top walls is 5/8" (16 mm). The minimum thickness of toekick panel is 1/4" (6 mm).

Furniture / Fixtures

During installation, the appliance is fastened to adjacent and overhead furniture / fixtures and it is therefore essential that all such furniture / fixtures are well secured to the substructure or adjacent wall.

Flooring / Substructure

On account of the heavy weight of a fully loaded appliance, a load-bearing substructure is required. To ensure correct installation and function, the support must be flat, level and made of hard, rigid material. If in doubt, contact an architect or a building expert.

Refer to the following table for load-bearing capacity:

Appliance	Load Bearing Capacity
30-Inch Single Door Refrigerator	1,110 lbs. / 500 kg
18-Inch Single Door Freezer	560 lbs. / 250 kg
30-Inch Bottom Freezer	900 lbs. / 410 kg
36-Inch French Door	1,200 lbs. / 540 kg

Door Panel Dimensions

Benchmark® Series Built-in Refrigeration

Select Bosch built-in refrigeration appliances are designed to be equipped with a decorative door panel. A panel can be custom-made or purchased as a stainless steel accessory. The table below illustrates the dimensions of the stainless steel panel accessories and can be used as a guide in creating custom panels. At 79 7/8" (2029 mm) tall, they are designed for a toekick height of 4" (102 mm), and a total cutout height of 84" (2134 mm) yielding 1/8" (3 mm) reveals. At 3/4" (19 mm) deep, they are designed to attach to the 24" (610 mm) deep appliance for an overall depth of 24 3/4" (629 mm). See page 183, 185, 187 and 194-199 for cutout planning.

When using custom panels, always ensure that the panel reverse is finished to match the exterior, as parts of the panel reverse will be visible when the refrigerator door is opened.

IMPORTANT: While these sketches can serve as a general guide in planning panel dimensions, the correct panel dimensions are dictated by design choices including style and dimensions of surrounding kitchen cabinetry, case and toekick height, etc. Please ensure careful planning based on the specific kitchen design.

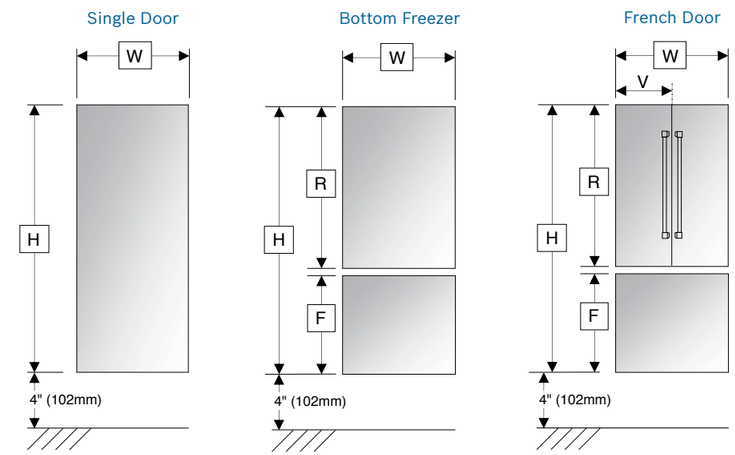

	B18IF900SP 18-Inch Single Door Freezer	B30IR900SP 30-Inch Single Door Refrigerator	B30IB900SP 30-Inch Bottom Freezer	B36IT900NP 36-Inch French Door
H	79 7/8" (2029 mm)	79 7/8" (2029 mm)	79 7/8" (2029 mm)	79 7/8" (2029 mm)
W	17 3/4" (451 mm)	29 3/4" (756 mm)	29 3/4" (756 mm)	35 3/4" (908 mm)
V	–	–	–	17 3/4" (451 mm)
R	–	–	51 11/32" (1304 mm)	51 11/32" (1304 mm)
F	–	–	28 13/32" (722 mm)	28 13/32" (722 mm)
Max. Panel Weight	37 lbs. (17kg)	64 lbs. (29kg)	55 lbs. (25kg)	55 lbs. (25kg)

Installation Options

Benchmark® Series Built-in Refrigeration

The Bosch Built-in Refrigeration Collection offers a variety of installation possibilities*. In some instances, special accessories are required.

Recommended Installations		Considerations
Stand-Alone	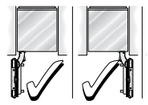	Any appliance can be installed as a stand-alone unit. Ensure a cutout flush to the appliance at a depth of minimum 4" (102 mm), preferably 6" (152 mm) on the top and sides.
Side-By-Side		When two appliances are installed side-by-side a sealing kit must be used. For combinations that involve a freezer column, this kit is provided. For all other (non-traditional) side-by-side combinations or instances where any appliances are installed less than 6" (152 mm) apart from one another but not connected side-by-side, purchase the Heater Kit (HEATKITB80).
Split Columns With Partition	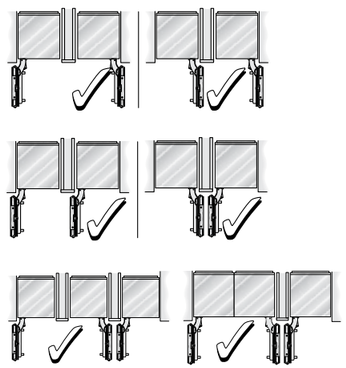	When dimensioning the partition, note the thickness of the door panel (including handles) as well as the swivel range to prevent damage if the doors are opened at the same time. (See page 194 for details on door swivel range dimensions) Three appliances can be installed together only if a partition — minimum 5/8" (16 mm) — is placed between two of the appliances. Ensure that door panel thickness (including handles) as well as the swivel range are accounted for.
At The End of a Cabinetry Run		All appliances must be completely enclosed on the top and sides. If one side of the appliance is visible, a decorative side panel must be used. The side panel must be connected firmly to the wall, the floor and any overhead furniture / fixtures before the appliance is placed in the cutout.
Not Recommended		**Concerns**
		It is absolutely essential to ensure that the appliance is installed in such a way that the doors do not interfere with an adjacent wall or other kitchen elements. (See page 194 for details on door swivel range dimensions)
	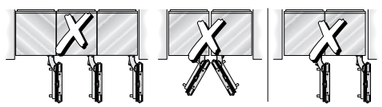	A partition — minimum 5/8" (16 mm) — is required to ensure the doors do not interfere with one another when opened. Use a partition to separate appliances and observe the door swivel range. (See page 194 for details on door swivel range dimensions)
	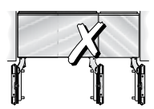	A French Door Bottom Freezer cannot be connected side-by-side with any other appliance. Use a partition to separate appliances and observe the door swivel range. (See page 194 for details on door swivel range dimensions)

*The Bosch warranty shall apply only to recommended installations.

Planning Information

Benchmark® Series Built-in Refrigeration

Electrical Specifications

The appliance comes with a 3-wire power supply cord. UL listed in the USA.

The appliance requires a 3-wire receptacle that is fitted with a 15 Amp fuse or higher. Refer to the following table for max load details.

Appliance	Max Load
	120V AC, 60Hz
30-Inch Single Door Refrigerator	15 A
18-Inch Single Door Freezer*	15 A
30-Inch Bottom Freezer*	15 A
36-Inch French Door	15 A

*Including ice maker

The receptacle must be installed by a licensed electrician only.

For the installation position of the receptacle refer to diagram in “Electrical Location”.

Grounding Instruction

This appliance must be grounded. In the event of a malfunction or breakdown, grounding will reduce the risk of electric shock by providing a path of least resistance for the electric current.

Additional Grounding Procedure

Some local regulations may require a separate ground. In such cases, the required accessory ground wire, clamp and screw must be purchased separately. Never ground the appliance to plastic plumbing lines, gas lines or water pipes.

A 4-conductor cord shall be used when the appliance is installed in an area where local codes do not permit grounding through the neutral. Power supply cord must be replaced by a licensed electrician only.

Warning

Improper connection of the equipment grounding conductor may result in electric shock. Have the appliance checked by a qualified electrician or service technician if you are in doubt as to whether the appliance has been properly grounded.

Electrical Location

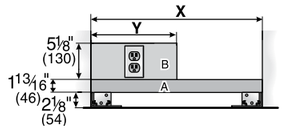

Split Column Installation		
	18-Inch	30-Inch
X	18" (457 mm)	30" (762 mm)
Y	9" (229 mm)	15" (381 mm)

Side-by-Side Installation

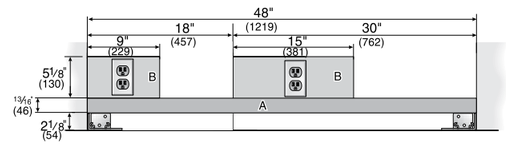

Water Location

A cold water connection is required for appliances that feature an ice maker or an ice and water dispenser.

The water pressure must be between 40 and 120 p.s.i. (2.75–8.25 bar). The installation must comply with local plumbing regulations.

A separate shut-off valve must be installed for the appliance water connection.

The shut-off valve for the water connection may not be behind the appliance. It is recommended to place the shut-off valve outside the cutout next to the appliance or in another easily accessible location. When installing the water connection, observe the permitted installation areas for the water supply line. The supply line can be located to the right (a), to the left (b), or underneath (c).

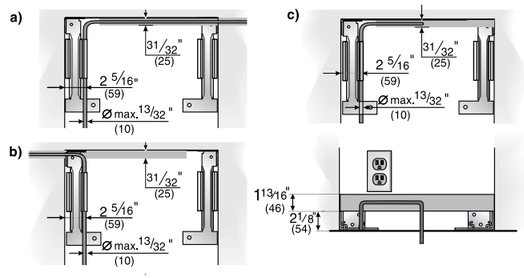

Planning Information

Benchmark® Series Built-in Refrigeration

Door Swivel Range

It is absolutely essential to ensure that the appliance is installed in such a way that the doors (including handles) and adjacent cabinets, countertops, pilasters, walls or other kitchen elements do not interfere with one another when opened. The illustrations below depict the swivel range of the refrigerator doors including mounted door panels of both 3/4" (19 mm) and 1 1/2" (38 mm) thickness.

In the event of door interference the following solutions may be employed:

- Limit the refrigerator door opening angle to 90° with a door stop pin inserted into the hinge.
- Reduce the door panel thickness (if larger than 3/4" (19 mm)).
- Install a spacer between the appliance and the kitchen element that creates the interference.
- Rearrange the opposing kitchen element that creates the problem.
- Create a protruding cutout for the appliance.

Door Swivel Range – 3/4" (19 mm)
Flush Appliance Door Panel

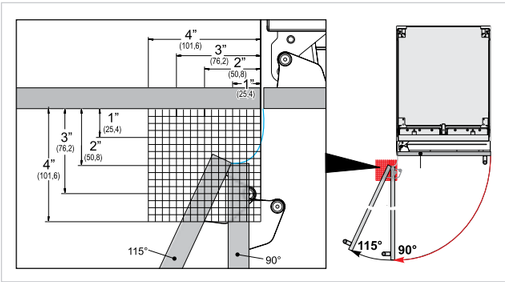

Door Swivel Range – 1 1/2" (38 mm)
Flush Appliance Door Panel

Side-By-Side Installation

The cutout width for side-by-side installations is defined by adding together the dimensions of two single columns. Below are the dimensions of a classic 48" side-by-side, with an 18" freezer on the left and a 30" refrigerator on the right.

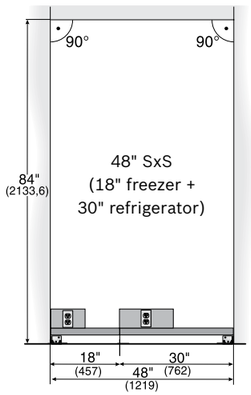

IMPORTANT: Just as with stand-alone columns, always ensure that the receptacles and the water line are correctly positioned. For dimensional requirements see page 193.

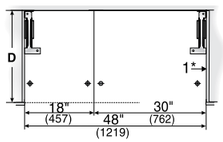

A: Area for running the water line. It is recommended the water-box be placed adjacent to the installation cutout, so that it can be accessed for service without uninstalling the appliance. If this is not possible, place the recessed water box adjacent to the power supply socket elevated at the heights as referenced in areas A+B.
B: Area for installing the power connection
D: Opening depth of cutout, depending on kitchen design (24" minimum)

Planning Information

Benchmark® Series Built-in Refrigeration

Cabinetry Terms & Basic Requirements

To clarify the terms that are used in this design guide, please refer to the following definitions:

Case

This is the main body of a kitchen cabinet.

(Cabinet) Face Frame

This is a decorative frame at the front of a kitchen cabinet representing the space between cabinetry doors or drawers and is typical for North America. European style cabinets (frameless cabinetry) typically do not have a face frame.

Door Panel

Able to be fully flush integrated when installed in 25" (635 mm) deep cabinets, Bosch built-in, custom panel refrigerators are intentionally designed to be equipped with custom door panels that perfectly match surrounding kitchen cabinetry. Typical panel thickness is 3/4" (19 mm). However, thicker panels can be accommodated to emulate the look of the visible face frame (as in overlay) or to match existing kitchen cabinetry doors. When using custom panels, always ensure that the panel reverse is finished to match the exterior, as parts of the panel reverse will be visible when the refrigerator door is opened.

Cutout (Niche)

The cutout is the cavity in which a Bosch built-in refrigerator and / or freezer is installed. The width of the cutout (18-inch, 30-inch, etc.) is dependent on the appliance(s). The total depth of the cutout is equal to the depth of the case plus face frame. It does not necessarily include the thickness of the door panel. For proper planning of cutout depth, please refer to pages 185, 187, 189 and 196–201.

Typically, the cutout for a Bosch built-in refrigerators and freezers will be 25" (635 mm) deep. When planning the cutout, it is essential that the top and side interior walls be flush to the appliance at a minimum depth of 4" (102 mm) from the outer edge of the face frame and composed of thick (5/8" (16 mm) minimum) material for secure installation. Also, because the case interior will be partially visible when the refrigerator door is opened, always ensure that the top and side returns are finished to match the exterior furniture at the same minimum depth of 4" (102 mm).

Kitchen Cabinetry Illustration

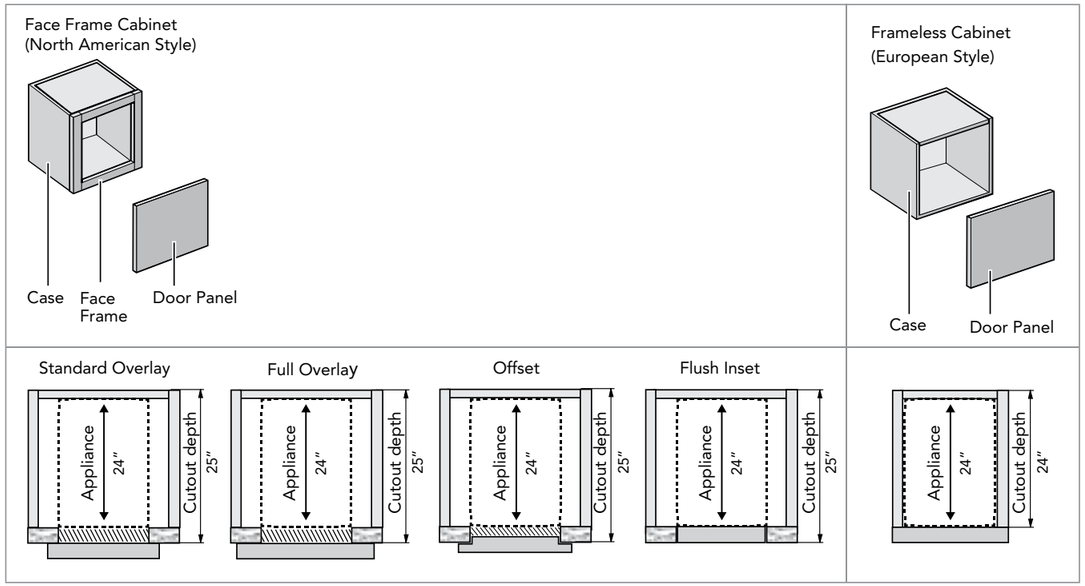

Planning Information

Benchmark® Series Built-in Refrigeration

Cabinetry Style & Cutout Depth

Bosch built-in refrigerators and freezers are designed to accommodate nearly any type of kitchen cabinetry door installation. Generally, when using standard ¾" (19 mm) panels, 25" (635 mm) deep cutouts are recommended but the required cutout depth depends on the desired cabinetry and custom panel execution, whether typical North American styles that employ a face frame – requiring a depth of 25" (635 mm) – or European style – requiring a depth of 24" (610 mm).

The below cabinetry styles detail requirements for the cutout and custom panel.

A) Standard (Partial) Overlay – 25" (635 mm) Cutout Depth

With standard overlay kitchen cabinetry the face frame is an important design element. In order to emulate this aesthetic for the refrigerator, one must account for the door panel thickness (typically **3/4**" (19 mm)) as well as the face frame thickness (here, also **3/4**" (19 mm)). The resulting thickness of the custom door panel is therefore **3/4**" (19 mm) + **3/4**" (19 mm) = 1 **1/2**" (38 mm). The cumulative thickness of the custom door panel requires added depth in the cutout so 25" (635 mm) is recommended (see sketch).

B) Full Overlay – 25" (635 mm) Cutout Depth

The requirements for standard overlays are also valid for full overlay designs so 25" (635 mm) cutout depth is recommended. However, especially if kitchen cabinet doors are thinner than **3/4**" (19 mm) or reveals are **1/8**" (3 mm) or smaller, a 24" (610 mm) cutout depth may also be acceptable. In this execution both the cabinet door and the small reveal of the fully overlaid face frame must be emulated within the typical appliance door panel thickness of **3/4**" (19 mm). This can be done either a) by simply ignoring the visible area of the face frame (very small reveals show virtually no face frame) or b) by creating a "nose" on the custom door panel to emulate a small visible face frame (see sketch).

C & D) Offset & Flush Inset – 25" (635 mm) Cutout Depth

Here, kitchen cabinetry door panels do not rest atop the cabinet face frame (overlay), but are instead inserted partially (offset) or fully flush (inset) into the face frame. Such offset or flush inset door panels require additional depth in the cutout. Using the example of a **3/4**" (19 mm) thick panel, the complete cutout depth would be 24" (610 mm) + **3/4**" (19 mm) = 24 **3/4**" (629 mm) and in this example 25" (635 mm) is recommended.

E) Framed – 24" (610 mm) Cutout Depth

A metal frame (FRAMKITB80) may be affixed to the side of the cabinet which conveniently hides unfinished case returns and provides a classic built-in look. This is particularly relevant for existing cabinetry that has not been custom-built to accommodate these appliances. A 24" (610 mm) cutout will result in a slightly protruding door panel for a typical built-in look.

F) European Style Kitchen Cabinetry – 24" (610 Mm) Cutout Depth

If the kitchen design is based on European style cabinetry, there is no need to emulate the look of a face frame, as such a frame is not an element of the kitchen cabinetry design. Therefore a 24" (610 mm) deep cutout with accompanying custom panel will always be sufficient.

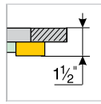

A) Standard Overlay Design

Custom Door Panel (Emulating a Face Frame)

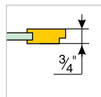

B) Full Overlay Design

Custom Door Panel with Nose (Emulating a Face Frame)

Split Column Installation

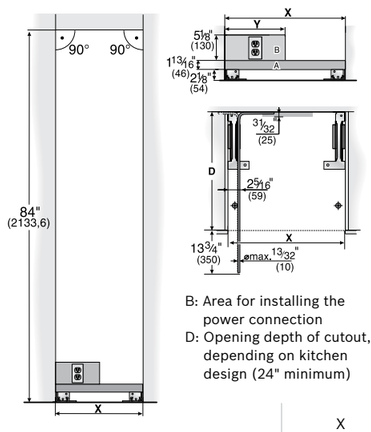

A: Area for running the water line. It is recommended the water-box be placed adjacent to the installation cutout, so that it can be accessed for service without uninstalling the appliance. If this is not possible, place the recessed water box adjacent to the power supply socket elevated at the heights as referenced in areas A+B.

B: Area for installing the power connection

D: Opening depth of cutout, depending on kitchen design (24" minimum)

	X	Y
18-Inch Single Door Freezer	18" (457 mm)	9" (229 mm)
30-Inch Single Door Refrigerator	30" (762 mm)	15" (381 mm)
30-Inch Bottom Freezer	30" (762 mm)	15" (381 mm)
36-Inch French Door	36" (914 mm)	18" (457 mm)

Important

It is strongly recommended the top interior of the cutout be of solid material (**5/8**" (16 mm) thickness). Ensure that the top well is completely flush for a depth of at least 4" (102 mm).

Ensure that the side walls of the cutout are also completely flush to a depth of at least 4" (102 mm).

If, for some reason, a separate cutout cabinet is created, ensure that the furniture return is at least 4" (102 mm) deep for proper installation.

Planning Information

Benchmark® Series Built-in Refrigeration

Toekick & Venting Grille

Each Bosch built-in refrigeration appliance comes with a 4" (102 mm) tall stainless steel toekick. A custom-made toekick that matches the surrounding cabinetry may be applied instead. While standard toekick height is 4" (102 mm), depending on the usage of the leveling legs, the toekick height could vary. Regardless of toekick height, it is imperative that the venting grille remain unblocked to ensure proper functionality of the appliance. Decorative toekicks should be removable to allow for servicing.

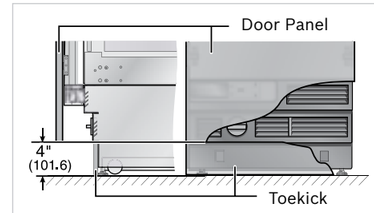

Typical 4" (102 mm) toekick height. Velcro adhesive strips are used to fasten the toekick to the appliance. Venting grille and (if applicable) the water filter cavity are located above the toekick area.

Upper Molding

The planning of decorative upper molding above the cutout requires taking into account the actual or desired height of the door panel.

The overall height of the door panel will depend on:

- the height of the appliance, typically 84" (2134 mm) – leveling legs allow height adjustment ranging from -**1/2**" (-13 mm) to +1 **3/8**" (+35 mm)
- the installed height of the door panel (distance from the bottom edge of the door panel to the floor, typically 4" (102 mm), and, if desired, any extension of the custom panel above the appliance cutout)
- the appliance type (single door or bottom freezer)

Important

Please recall that a panel should be installed at a minimum height of 4" (102 mm) from the floor to allow proper ventilation of the appliance.

Always ensure that the top of the cutout or upper decorative molding is at least 4" (102 mm) deep, so that the refrigerator can be properly secured to the cutout wall. This is particularly important if a protruding cutout is specially created and configured with a face frame. Furniture returns for any face frame must be a minimum of 4" (102 mm) deep.

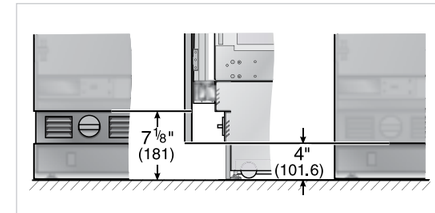

If required by the surrounding cabinetry design, the distance between the bottom edge of the door panel and the floor can be increased from approx. 4" (102 mm) up to 7 **1/8**" (181 mm), but should not be decreased. Note, however, that the venting grille and (if applicable) water filter cavity will be visible, even if the door is closed.

Vertical Section, Side View:

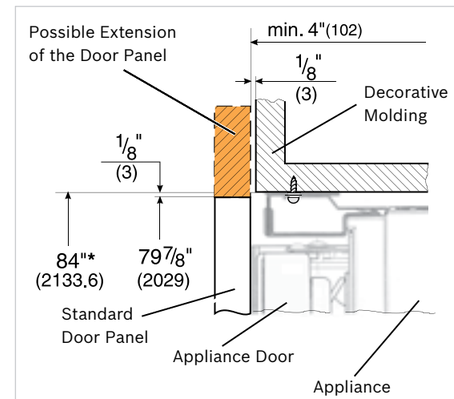

*Adjustment in leveling legs: -**1/2**" (-13 mm) to 1 **3/8**" (35 mm)

Planning Information

Benchmark® Series Built-in Refrigeration

Planning Example #1: Frameless (European) Cabinetry

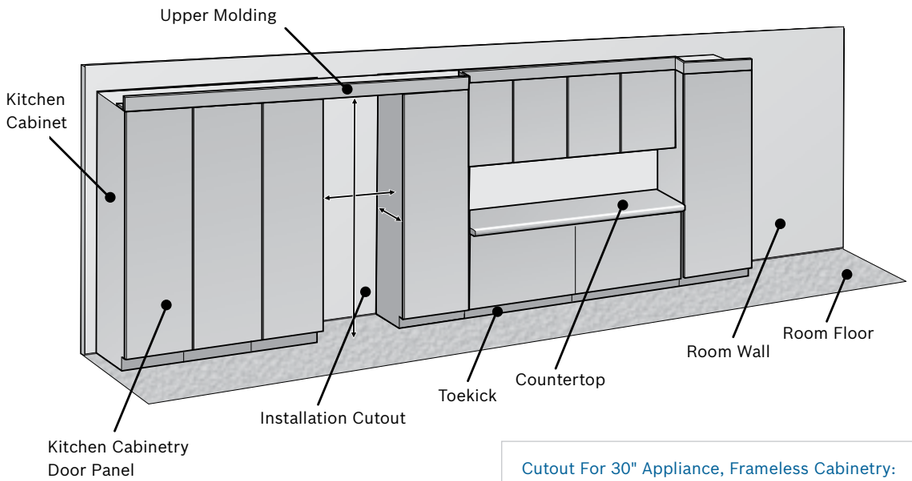

Cutout For 30" Appliance, Frameless Cabinetry:

In this example, the installation cutout is formed by simply leaving a gap between two kitchen cabinets.

The custom door panel 3/4" (19 mm) will be identical in appearance and thickness to the surrounding kitchen cabinetry panels.

- cutout width is exactly 30" (762 mm)
- cutout (case) depth is 24" (610 mm) — does not include door panel
- top and side walls of cutout interior are completely flush, of solid material and at least 4" (102 mm) deep

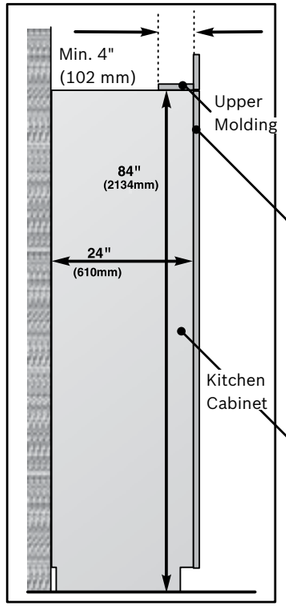

Installation Cutout (Vertical Section)

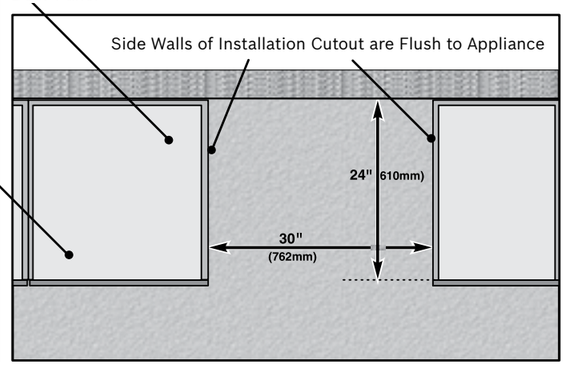

30-Inch Installation Cutout (Horizontal Section)

Planning Information

Benchmark® Series Built-in Refrigeration

Planning Example #2: Standard Overlay Cabinetry

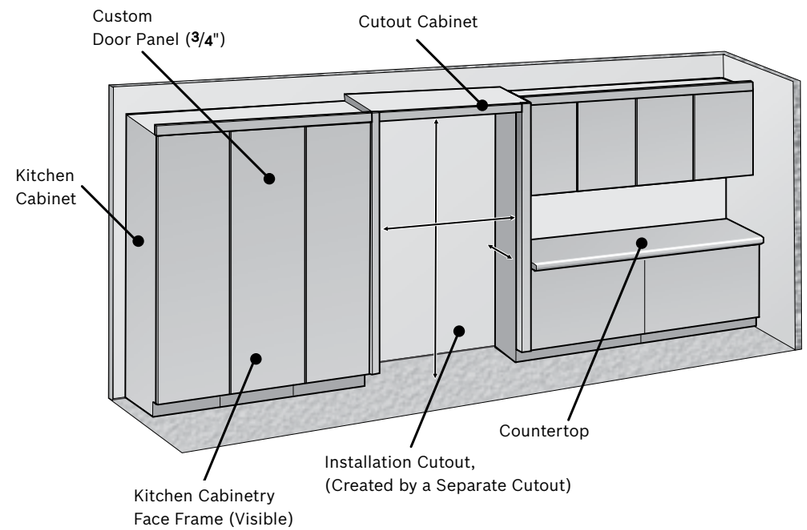

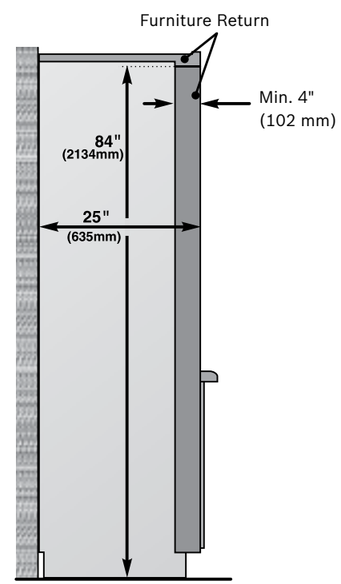

CUTOUT FOR 48" SIDE-BY-SIDE APPLIANCE COMBINATION, STANDARD OVERLAY CABINETRY:

In this example, the installation cutout is formed by creating a separate cutout around the appliances. It yields a look that deviates from the general kitchen design.

The custom door panel has a cumulative thickness of 1 1/2" (38 mm), 3/4" (19 mm) emulating the face frame and 3/4" (19 mm) for the actual door panel). Thus, a 25" (635 mm) deep installation cutout is required.

- cutout width is exactly 48" (for an 18" + 30" = 48" side-by-side combination)
- cutout (case) depth is 25" (635 mm) due to 1 1/2" (38 mm) custom door panel
- any furniture return must be at least 4" (102 mm) deep, on interior top and sides, of solid material and should be finished to match the exterior at the same depth (4" or 102 mm)

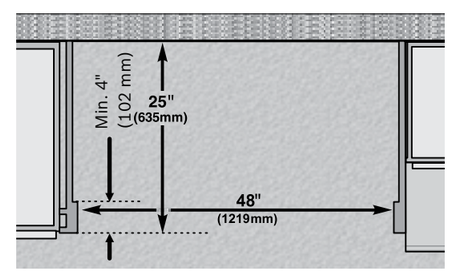

800 Series Freestanding French Door Refrigerator

800 Series
B21CT80SNS (Stainless)
B21CT80SNB (Black Stainless Steel)
French Door

- 35 3/4" x 69 7/8" Counter-Depth
- Full-Width Chiller Drawer
- Dual AirCool System
- Retractable Half Shelf
- Hidden Hinges
- Humidity Controlled Crispers

	800 Series 36" Counter-Depth
	Stainless Steel – B21CT80SNS Black Stainless Steel – B21CT80SNB
General Properties	
Water filter	Yes
Lighting	LED
Defrost process refrigerator section	Frost-free
Number of shelves – refrigerator	5
Adjustable shelves – refrigerator	4 half-width
Shelf material – refrigerator	Tempered glass
Type of shelves – refrigerator	Tempered glass
Gallon storage bins	5
Humidity control drawer	2
Defrost process freezer section	Automatic
Number of drawers – freezer	1
Ice maker	Yes
Capacity	
Total capacity (cu. ft.)	20.7 cu. ft.
Refrigerator gross capacity (cu. ft.)	14.7 cu. ft.
Freezer gross capacity (cu. ft.)	6.0 cu. ft.
Technical Details	
Current (A)	15 A
Volts (V)	120 V
Frequency (Hz)	60 Hz
Power cord length (in.)	67"
Plug type	120V-3 prong
Dimensions & Weight	
Appliance dimensions (H x W x D) (in.)	69 7/8" x 35 3/4" x 28 3/4"
Required cutout size (H x W x D) (in.)*	70" x 36" x 25"
Net weight (lbs)	294 lbs
Efficiency	
Energy consumption (kWh / yr)	623 kWh
Accessories – Included	
Included	2 egg trays, ice storage bin, ice scoop, toe kick trim cover, 1 water filter

*Add 63/64" (2.5 cm) to the height dimension when leveling legs are fully extended

Optional Accessories

BOHANDL50
Pro-style stainless steel handle kit
(P/N 00775144)

BORPLFTR10
Replacement water filter
(P/N 00740570)

800 Series Freestanding French Door Refrigerator

36" Freestanding Dimensions

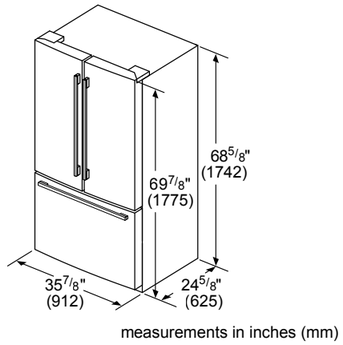

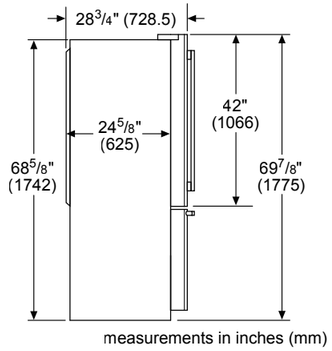

36" Freestanding Dimensions (Overhead Views)

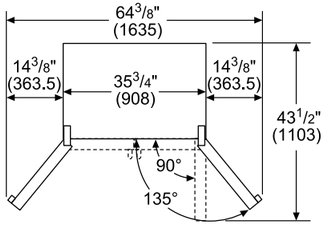

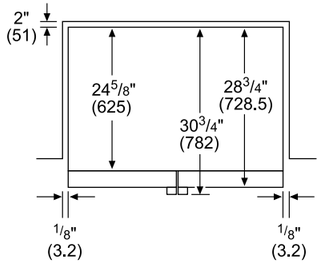

Drawers can be pulled out with door open 90°.
Drawers can be taken out with door completely opened.

measurements in inches (mm)

36" Freestanding Installation

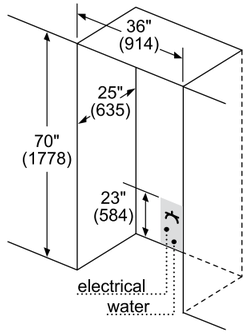

Leave 1/2" (12.7 mm) gap at the top and 2" (51 mm) behind the refrigerator for proper ventilation.
For installation next to a wall, leave 3 3/4" (95.2 mm) minimum on wall side for opening the door.
It is recommended that you do not install the refrigerator near a heat source such as an oven or a range.
Maximum receptacle and water line height 23" (584 mm).

measurements in inches (mm)

800 Series Freestanding French Door Refrigerators

800 Series
B21CL80SNS
4-Door French Door

- 35 3/4" x 69 7/8" Counter-Depth
- 2-Drawer Freezer
- Full-Width Chiller Drawer
- Dual AirCool System
- Retractable Shelf
- Hidden Hinges
- Humidity Controlled Crisper Drawers

800 Series
B21CL81SNS
4-Door French Door

- 35 3/4" X 69 7/8" Counter-Depth
- 2-Drawer Freezer
- Full-Width Chiller Drawer
- Dual AirCool System
- Retractable Shelf
- Hidden Hinges
- Humidity Controlled Crisper Drawers

	800 Series 36" Counter-Depth	800 Series 36" Counter-Depth
	Stainless Steel – B21CL80SNS	Stainless Steel – B21CL81SNS
General Properties		
Lighting	LED	LED
Defrost process refrigerator section	Frost-free	Frost-free
Number of shelves – refrigerator	5	5
Adjustable shelves – refrigerator	4 half-width	4 half-width
Shelf material – refrigerator	Tempered glass	Tempered glass
Type of shelves – refrigerator	Tempered glass	Tempered glass
Gallon storage bins	5	5
Humidity control drawer	2	2
Defrost process freezer section	Automatic	Automatic
Number of drawers – freezer	2	2
Ice maker	Yes	Yes
Water filter	No	No
Capacity		
Total unit gross capacity (cu. ft.) – AHAM	20.7 cu. ft.	20.7 cu. ft.
Refrigerator gross capacity (cu. ft.)	14.7 cu. ft.	14.7 cu. ft.
Freezer gross capacity (cu. ft.)	6.0 cu. ft.	6.0 cu. ft.
Technical Details		
Current (A)	10 A	10 A
Volts (V)	120 V	120 V
Frequency (Hz)	60 Hz	60 Hz
Power cord length (in.)	67"	67"
Plug type	120V-3 prong	120V-3 prong
Dimensions & Weight		
Appliance dimensions (HxWxD) (in.)	69 7/8" x 35 3/4" x 28 3/4"	69 7/8" x 35 3/4" x 28 3/4"
Required cutout size (HxWxD) (in.)*	70" x 36" x 25"	70" x 36" x 25"
Net weight (lbs)	301.76 lbs	301.76 lbs
Efficiency		
Energy consumption (kWh / yr)	623 kWh	623 kWh
Accessories – Included		
Included	2 egg trays, ice scoop, toe kick trim cover	2 egg trays, ice scoop, toe kick trim cover

*Add 63/64" (2.5 cm) to the height dimension when leveling legs are fully extended

Optional Accessories

BOHANDL40
Pro-style stainless steel handle kit (P/N 00775143)

800 Series Freestanding French Door Refrigerators

36" Freestanding Dimensions

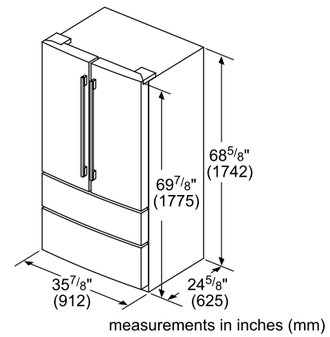

measurements in inches (mm)

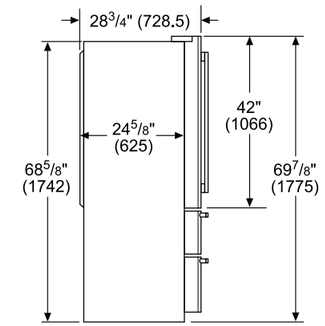

measurements in inches (mm)

36" Freestanding Dimensions (Overhead Views)

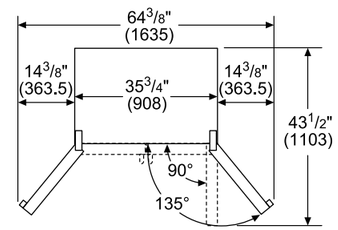

Drawers can be pulled out with door open 90°.
Drawers can be taken out with door completely opened.

measurements in inches (mm)

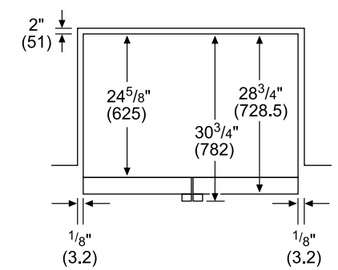

measurements in inches (mm)

36" Freestanding Installation

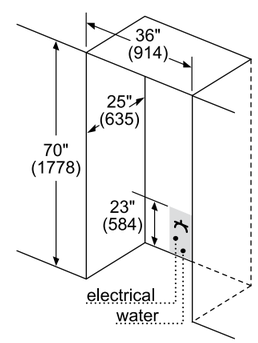

Leave 1/2" (12.7 mm) gap at the top and 2" (51 mm) behind the refrigerator for proper ventilation.
For installation next to a wall, leave 3 3/4" (95.2 mm) minimum on wall side for opening the door.
It is recommended that you do not install the refrigerator near a heat source such as an oven or a range.
Maximum receptacle and water line height 23" (584 mm).

measurements in inches (mm)

800 Series Freestanding French Door Refrigerator

800 Series
B26FT50SNS
French Door

- 35 5/8" x 69 3/4" Standard-Depth
- Anti-Fingerprint Stainless Steel
- MultiAirFlow™ Cooling System
- Storable Partial Shelf
- Humidity Controlled Crisper Drawers
- Quick Ice

	800 Series 36" Standard-Depth
	Stainless Steel – B26FT50SNS
General Properties	
Door material	Anti-fingerprint stainless steel
Water filter	Yes
Lighting	Theater design LED
Defrost process refrigerator section	Frost-free
Number of shelves – refrigerator	5
Adjustable shelves – refrigerator	4
Shelf material – refrigerator	Tempered glass
Type of shelves – refrigerator	Spill-proof glass
Flexible shelf	1 storable partial shelf
Gallon storage bins	2
Covered dairy bin	1
Humidity control drawer	2 crisper drawers
Defrost process freezer section	Automatic
Number of drawers – freezer	2
Ice maker	Yes
Quick ice	Yes
Capacity	
Total unit gross capacity (cu. ft.) – AHAM	25.0 cu. ft.
Refrigerator gross capacity (cu. ft.)	17.2 cu. ft.
Freezer gross capacity (cu. ft.)	7.8 cu. ft.
Technical Details	
Current (A)	15 A
Volts (V)	120 V
Frequency (Hz)	60 Hz
Power cord length (in.)	98"
Plug type	120V-3 prong
Dimensions & Weight	
Appliance dimensions (H x W x D) (in.)	69 3/4" x 35 5/8" x 32 15/32"
Required cutout size (H x W x D) (in.)	69" x 36" x 30 1/8"
Net weight (lbs)	325 lbs
Efficiency	
ENERGY STAR® qualified	Yes
Energy consumption (kWh / yr)	693 kWh
Accessories – Included	
Included	Bottle holder, egg tray, ice storage bin, 1 water filter

Optional Accessories

BORPLFTR10
Replacement water filter (P/N 00740570)

800 Series Freestanding French Door Refrigerator

B26FT50SNS Dimensions

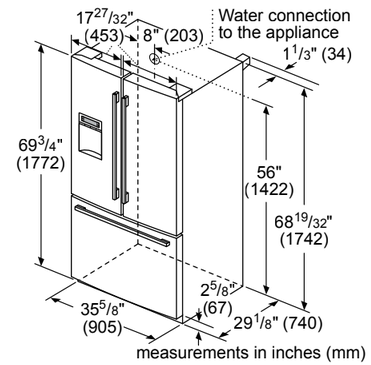

B26FT50SNS Dimensions (Overhead Views)

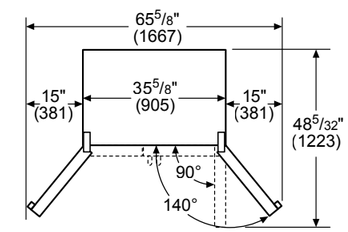

Drawers can be pulled out with door open 90°. Drawers can be taken out with door completely opened.

measurements in inches (mm)

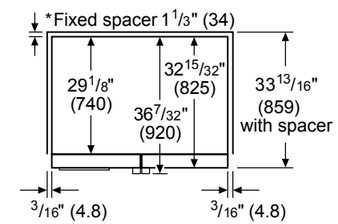

*The 1 1/3" (34) fixed spacer on back of appliance allows proper ventilation and space for the water connection.

measurements in inches (mm)

B26FT50SNS Installation

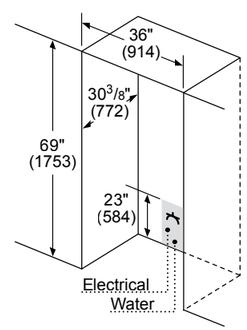

The 1 1/3" (34 mm) fixed spacer on back of appliance allows proper ventilation and space for the water connection.

For installation next to a wall, leave a minimum gap of 3 3/4" (95.2 mm) on the wall side for opening the door.

It is recommended that you do not install the refrigerator near a heat source such as an oven or a range.

Maximum receptacle and water line height 23" (584 mm).

Add 63/64" (25 mm) to appliance height dimension at front if leveling legs are fully extended.

measurements in inches (mm)

300 Series Freestanding Side-by-Side Refrigerator

300 Series
B20CS30SNS
Side-by-Side

- 35 15/16" x 69 11/16" Counter-Depth
- Anti-Fingerprint Stainless Steel
- MultiAirFlow Cooling System
- Filtered Water, Crushed and Cubed Ice Dispenser

	300 Series 36" Counter-Depth
	Custom Panel – B20CS30SNS
General Properties	
Door material	Anti-fingerprint stainless steel
Water filter	Yes
Lighting	LED
Defrost process refrigerator section	Frost-free
Number of shelves – refrigerator	4
Adjustable shelves – refrigerator	1
Shelf material – refrigerator	Tempered glass
Type of shelves – refrigerator	Framed tempered glass
Gallon storage bins	3
Defrost process freezer section	Automatic
Number of drawers – freezer	2
Adjustable shelves – freezer	3
Shelf material – freezer	Tempered glass
Type of shelves – freezer	Framed tempered glass
Ice maker	Yes
Capacity	
Total unit gross capacity (cu. ft.) – AHAM	20.2 cu. ft.
Refrigerator gross capacity (cu. ft.)	13.2 cu. ft.
Freezer gross capacity (cu. ft.)	6.96 cu. ft.
Technical Details	
Current (A)	15 A
Volts (V)	115 V
Frequency (Hz)	60 Hz
Power cord length (in.)	76.8"
Plug type	120V-3 prong
Dimensions & Weight	
Appliance dimensions (HxWxD) (in.)	69 11/16" x 35 15/16" x 27 1/2"
Required cutout size (HxWxD) (in.)	70" x 36" x 25.9"
Net weight (lbs)	245 lbs
Efficiency	
ENERGY STAR® qualified	Yes
Energy consumption (kWh / yr)	594 kWh
Accessories – Included	
Included	Egg tray, 1 water filter

Optional Accessories

BORPLFTR10
Replacement water filter (P/N 00740570)

300 Series Freestanding Side-by-Side Refrigerator

B20CS30SNS Dimensions

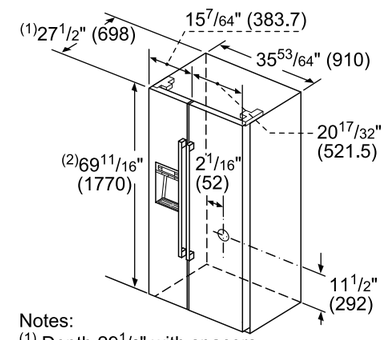

Notes:
(1) Depth 29 1/2" with spacers
(2) Front height adjustable from 69 3/8" to 70"

B20CS30SNS Dimensions (Overhead Views)

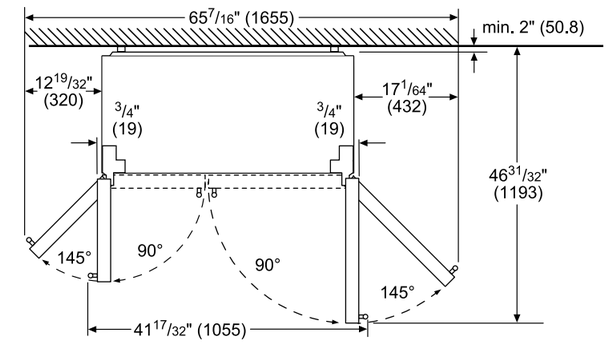

Drawers can be pulled out fully at door opening of 145°

measurements in inches (mm)

B20CS30SNS Installation

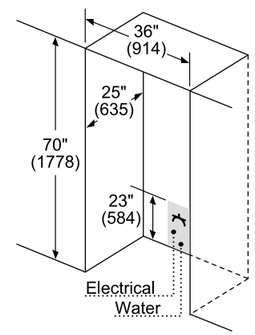

Leave a 1/2" (12.7 mm) gap at the top and 2" (51 mm) behind the refrigerator for proper ventilation.
For installation next to a wall, leave a minimum gap of 3 3/4" (95.2 mm) on the wall side for opening the door.
It is recommended that you do not install the refrigerator near a heat source such as an oven or a range.
Maximum receptacle and waterline height 23" (584 mm).

measurements in inches (mm)

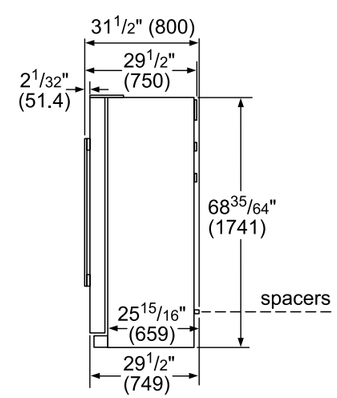

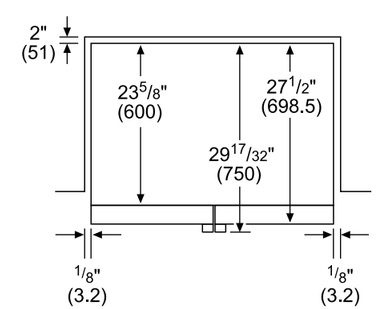

measurements in inches (mm)

500 / 800 Series 24" Freestanding Bottom Freezer Refrigerators

500 Series
B11CB50SSS
Bottom Freezer

- 24" x 79" Counter-Depth
- HydroFresh Drawer
- Wine Rack
- Sidewall LED Lighting

800 Series
B11CB81SSS
Bottom Freezer

- 24" x 79" Counter-Depth
- **+** Built-in Ice Maker
- HydroFresh Drawer
- Wine Rack
- Sidewall LED Lighting

800 Series
B10CB80NVS (Stainless)
B10CB80NVW (White)
B10CB80NVB (Black)
Glass Door Bottom Freezer

- 24" x 73" Counter-Depth
- **+** Stylish Tempered Glass Door
- HydroFresh Drawer
- Wine Rack

+ Indicates a step-up feature

	500 Series 24" Counter-Depth	800 Series 24" Counter-Depth	800 Series 24" Counter-Depth
	Stainless Steel – B11CB50SSS	Stainless Steel – B11CB81SSS	Glass on Stainless Steel – B10CB80NVS White Glass – B10CB80NVW Black Glass – B10CB80NVB
General Properties			
Reversible door hinge	Yes	Yes	Yes
Water filter	No	No	No
Lighting	LED	LED	LED
Defrost process refrigerator section	Frost-free	Frost-free	Frost-free
Number of shelves – refrigerator	3	3	3
Adjustable shelves – refrigerator	2	2	2
Shelf material – refrigerator	Tempered glass	Tempered glass	Tempered glass
Type of shelves – refrigerator	Spill-proof glass	Spill-proof glass	Spill-proof glass
Door storage bins	3	3	3
Humidity control drawer	1	1	1
Defrost process freezer section	Automatic	Automatic	Automatic
Number of drawers – freezer	3	2	3
Shelf material – freezer	Metal	Metal	Metal
Type of shelves – freezer	Wire	Wire	Wire
Ice maker	No	Yes	No
Capacity			
Total unit gross capacity (cu. ft.) – AHAM	11 cu. ft.	11 cu. ft.	10 cu. ft.
Refrigerator gross capacity (cu. ft.)	7.7 cu. ft.	7.7 cu. ft.	7.5 cu. ft.
Freezer gross capacity (cu. ft.)	3.3 cu. ft.	3.3 cu. ft.	2.5 cu. ft.
Technical Details			
Current (A)	15 A	15 A	10 A
Volts (V)	120 V	120 V	110 – 120 V
Frequency (Hz)	60 Hz	60 Hz	60 Hz
Power cord length (in.)	94"	94"	94"
Plug type	120V-3 prong	120V-3 prong	120V-3 prong
Dimensions & Weight			
Appliance dimensions (HxWxD) (in.)	78 7/8" x 23 1/2" x 23 7/8"	78 7/8" x 23 1/2" x 23 7/8"	72 7/8" x 23 1/2" x 25 3/4"
Required cutout size (HxWxD) (in.)*	79 1/2" x 24" x 24"	79 1/2" x 24" x 24"	73 1/2" x 24 1/8" x 22"
Net weight (lbs)	181 lbs	181 lbs	203.9 lbs (191.8 lbs W/B)
Efficiency			
ENERGY STAR® qualified	Yes	Yes	Yes
Energy consumption (kWh / yr)	357 kWh	357 kWh	435 kWh
Accessories – Included			
Included	Wine rack, ice tray, egg tray, bottle holder	Wine rack, ice tray, egg tray, bottle holder	Wine rack, ice tray, egg tray, bottle holder

*Add 3/4" (1.9 cm) to the height dimension when leveling legs are fully extended

500 / 800 Series 24" Freestanding Bottom Freezer Refrigerators

24" B11CB50SSS & B11CB81SSS Dimensions

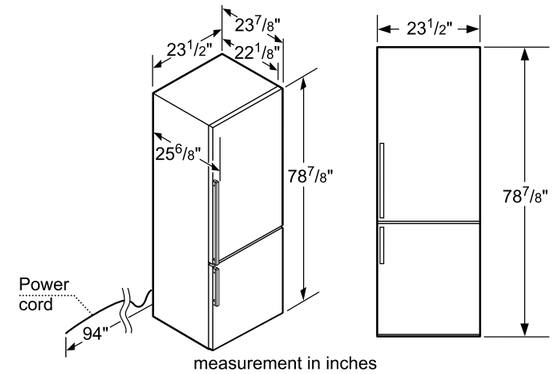

24" B10CB80NVS/W/B Dimensions

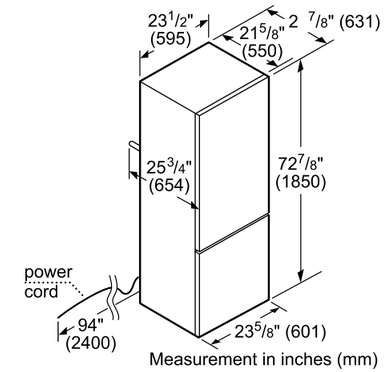

24" B11CB50SSS Installation

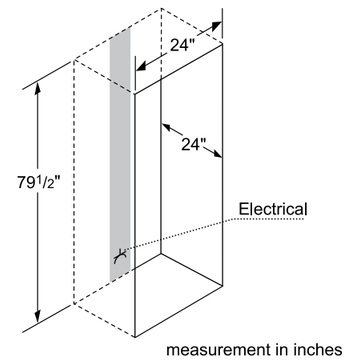

24" B10CB80NVS/W/B Installation

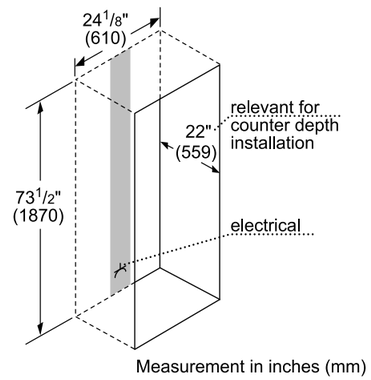

24" B11CB81SSS Installation

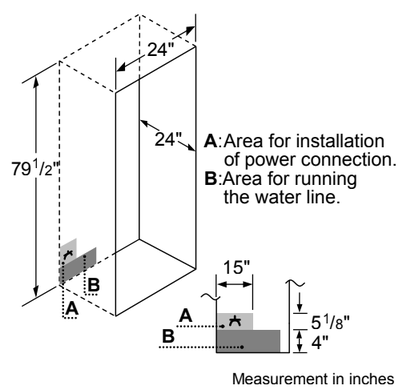

24" B10CB80NVS/W/B Overhead Views

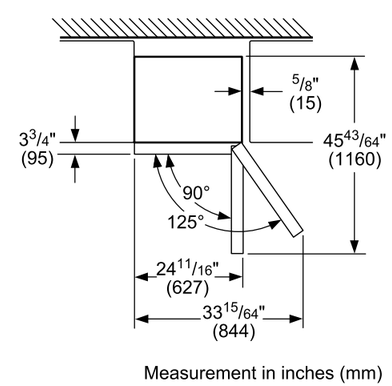

800 Series Built-in Bottom Freezer Refrigerator

800 Series
B09IB81NSP
Built-in Custom Panel Bottom Freezer with Home Connect™

- 22" x 69 3/4"
- + Home Connect™
- Custom Panel Ready
- Installs Completely Flush
- Maintenance-free LED lighting
- + VitaFresh® Pro Drawer

+ Indicates a step-up feature

	800 Series 22" with Home Connect™
	Custom Panel – B09IB81NSP
General Properties	
Home Connect™ (Wi-Fi enabled)	Yes
Reversible door hinge	Yes
Water filter	No
Lighting	Maintenance-free LED lighting
Defrost process refrigerator section	Frost-free
Number of shelves – refrigerator	5
Adjustable shelves – refrigerator	4
Shelf material – refrigerator	Glass w/metal trim
Type of shelves – refrigerator	4 adjustable, 1 varial shelf
Gallon storage bins	No
Humidity control drawer	Yes
Defrost process freezer section	Automatic
Number of drawers – freezer	3
Ice maker	No
Quick ice	No
Capacity	
Total capacity (cu. ft.)	9.0 cu. ft.
Technical Details	
Watts (W)	90 W
Current (A)	10 A
Volts (V)	120 V
Frequency (Hz)	60 Hz
Power cord length (in.)	90"
Plug type	3-Prong
Dimensions & Weight	
Appliance dimensions (HxWxD) (in.)	69 3/4" x 22" x 21 1/2"
Required cutout size (HxWxD) (in.)	70" x 22 1/4" x 24 3/4"
Net weight (lbs)	151 lbs
Efficiency	
ENERGY STAR® qualified	Yes
Energy consumption (kWh / yr)	394 kWh

800 Series Built-in Bottom Freezer Refrigerator

B09IB81NSP Dimensions

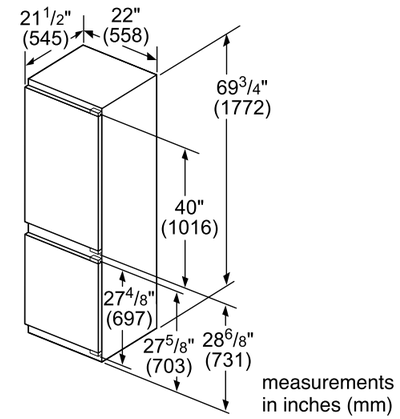

B09IB81NSP Installation

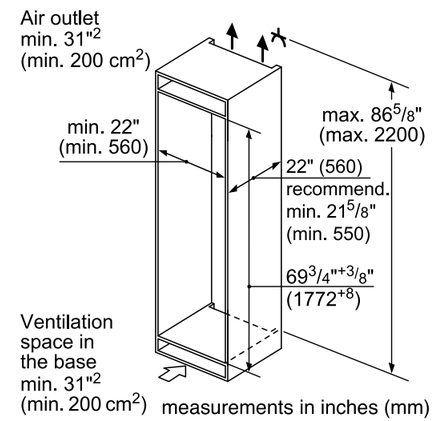

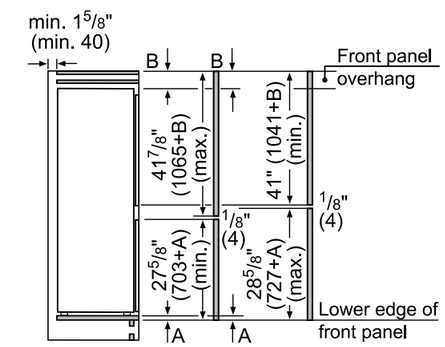

The specified unit door dimensions are valid for a door gap of 1/8" (4 mm).
measurements in inches (mm)

IMPORTANT: Handleless Panels should not be installed on units without the soft close capability. If you are uncertain if you have a refrigeration unit with soft close capability please contact our customer team by calling 1-800-735-4328.

Laundry

Bosch takes care of life's laundry tasks with inspired designs and inventive solutions that help you live more simply. With sleek, functional, compact designs, Bosch washers and dryers fit your home as much as your lifestyle. Surprisingly spacious and efficient, Bosch's compact 24" design seamlessly integrates into any laundry space either stacked or side-by-side. Our ENERGY STAR® qualified washers and dryers are engineered with a variety of cycles to clean faster and preserve delicate fabrics, while saving water and energy.* Ultra quiet, these space-saving, compact machines are designed to lighten life's laundry load.

*All Bosch washers and the 500 and select 800 series dryers are ENERGY STAR® qualified.

24" Compact Washers

300 Series
WAT28400UC

- SpeedPerfect® Provides Up to 40% Faster Washing Time*
- EcoSilence Motor Delivers Quiet, Efficient Performance
- Anti-vibration Circular Side Walls Reduce Vibration
- ENERGY STAR® Qualified

500 Series
WAT28401UC

+ AquaShield® Provides Protection Against Water Damage
+ Sanitize Cycle Heats Water to Kill Bacteria
+ Washes Up to 18 Towels in One Load
+ Lower Noise 52 / 72 dBA (Washing / Spinning)

+ Indicates a step-up feature

	300 Series	500 Series
	White – WAT28400UC	White – WAT28401UC
General Properties		
Drum material	Stainless steel	Stainless steel
Maximum spin speed (rpm)	1,400	1,400
Interior light	No	No
Leak protection systems	Reinforced hose	AquaShield® hose
Internal water heater	Yes	Yes
Stackable	Yes	Yes
Silence level – washing (dBA)	54	52
Silence level – spinning (dBA)	73	72
Programs (No.), [Special]	(15), [Allergen, Jeans, Heavy Duty]	(15), [Bulky / Large Items, Towels]
Options (No.), [Special]	(6), [SpeedPerfect®, PreWash]	(6), [SpeedPerfect®, PreWash]
Energy consumption (kWh / yr)	84	84
Water consumption (gal / yr)	2,294	2,294
ENERGY STAR® qualified	Yes	Yes
Capacity		
Capacity (cu. ft.), (relative load)	2.2 (16 bath towels)	2.2 (18 bath towels)
Design Elements		
Door ring	White	Silver
Control type	Touch	Touch
Dial	White	Silver ring with white center
Bosch logo on door glass	No	Yes
Technical Details		
Watts (W)	2,520	2,520
Circuit breaker if plugged into an individual circuit (A)	20	20
Volts (V)	208 / 220 – 240	208 / 220 – 240
Current (A)	10.5	10.5
Frequency (Hz)	60	60
Plug type	240V; NEMA 6 – 15 (3 prong)	240V; NEMA 6 – 15 (3 prong)
Included power cord length (in)	63" (Full length)	63" (Full length)
Drain / inlet hose length (in)	57" / 47" (Full length)	57" / 59" (Full length)
Door hinge	Left side (not reversible)	Left side (not reversible)
Dimensions & Weight		
Overall dimensions (HxWxD) (in)	33 1/4" x 23 1/2" x 24 1/4"	33 1/4" x 23 1/2" x 25"
Net weight (lbs)	158	160
Minimum stack height (in)	67 3/4"	67 3/4"
ADA compliance	Meets ADA height and access requirements *when installed on pedestal*. Meets ADA operable parts requirements for controls and detergent dispenser	

*As compared to Perm Press Heavy Soil cycle without SpeedPerfect

24" Compact Washers

800 Series
WAT28402UC

+ Wash 5 Men's Dress Shirts in Just 15 Minutes
+ AquaStop® Plus Provides Extra Protection Against Water Damage
+ Interior LED Light
+ Lowest Noise 50 / 71 dBA (Washing / Spinning)

800 Series
WAW285H2UC

+ Home Connect™ Controls Washer Remotely
+ Premium LED Controls with Enhanced Text and Icons
+ Illuminated Selection Jog Dial
+ Stains Program
+ EcoPerfect

+ Indicates a step-up feature

	800 Series	800 Series
	White – WAT28402UC	White – WAW285H2UC
General Properties		
Drum material	Stainless steel	Stainless steel
Maximum spin speed (rpm)	1,400	1,400
Interior light	Yes (LED)	Yes (LED)
Leak protection systems	AquaStop® Plus (AquaStop® base + AquaShield® hose)	AquaStop® Plus (AquaStop® base + AquaShield® hose)
Internal water heater	Yes	Yes
Stackable	Yes	Yes
Silence level – washing (dBA)	50	50
Silence level – spinning (dBA)	71	71
Programs (No.), [Special]	(15), [Super Quick 15, Whitest Whites]	(14), [Super Quick 15, Whitest Whites]
Options (No.), [Special]	(6), [SpeedPerfect®, PreWash]	(9), [Remote Start, EcoPerfect, Stains]
Energy consumption (kWh / yr)	84	84
Water consumption (gal / yr)	2,294	2,358
ENERGY STAR® qualified	Yes	Yes
Capacity		
Capacity (cu. ft.), (relative load)	2.2 (18 bath towels)	2.2 (18 bath towels)
Design Elements		
Door ring	Chrome	Chrome
Control type	Touch	Premium LED Touch
Dial	Chrome design, metal material	Illuminated jog dial
Bosch logo on door glass	Yes	Yes
Technical Details		
Watts (W)	2,520	2,520
Circuit breaker if plugged into an individual circuit (A)	20	20
Volts (V)	208 / 220 – 240	208 / 220 – 240
Current (A)	10.5	10.5
Frequency (Hz)	60	60
Plug type	240V; NEMA 6 – 15 (3 prong)	240V; NEMA 6 – 15 (3 prong)
Included power cord length (in)	63" (Full length)	63" (Full length)
Drain / inlet hose length (in)	57" / 59" (Full length)	57" / 59" (Full length)
Door hinge	Left side (not reversible)	Left side (not reversible)
Dimensions & Weight		
Overall dimensions (HxWxD) (in)	33 1/4" x 23 1/2" x 25"	33 1/4" x 23 1/2" x 25"
Net weight (lbs)	160	160
Minimum stack height (in)	67 3/4"	67 3/4"
ADA compliance	Meets ADA height and access requirements when installed on pedestal. Meets ADA operable parts requirements for controls and detergent dispenser.	

*As compared to Perm Press Heavy Soil cycle without SpeedPerfect

24" Compact Dryers

300 Series
WTG86400UC

- Washer Plugs into Dryer for Easy Installation
- Dries Up to 16 Towels in One Load
- Intelligent Sensors Prevent Over Drying
- Anti-vibration Circular Side Walls Reduce Vibration
- Low Noise 67 dBA

500 Series
WTG86401UC

+ Reversible Door
+ Stainless Steel Drum
+ Dries Up to 18 Towels in One Load
+ ENERGY STAR® Qualified
+ Lower Noise 65 dBA
+ Bulky / Large Items Cycle

+ Indicates a step-up feature

	300 Series	500 Series
	White – WTG86400UC	White – WTG86401UC
General Properties		
Dryer type	Condensing	Condensing
Drum material	Galvalume	Stainless steel
Interior light	No	No
Ventless drying (no ducting)	Yes	Yes
Stackable	Yes	Yes
Silence level (dBA)	67	65
Programs (No.), [Special]	(15), [Jeans, Heavy Duty]	(15), [Bulky / Large Items, Towels]
Options (No.), [Special]	(6), [Dry Level, Finished In]	(6), [Dry Level, Finished In]
Energy consumption (kWh / yr)	320	311
ENERGY STAR® qualified	No	Yes
Capacity		
Capacity (cu. ft.)	4.0	4.0
Relative load	16 bath towels	18 bath towels
Design Elements		
Door ring	White	Silver
Control type	Touch	Touch
Dial	White	Silver ring with white center
Bosch logo on door glass	No	Yes
Technical Details		
Energy source	Electric	Electric
Watts (W)	2,520	2,520
Circuit breaker (A)	30	30
Volts (V)	208 / 220 – 240	208 / 220 – 240
Current (A)	10.5	10.5
Frequency (Hz)	60	60
Plug type	240V; NEMA 14 – 30 (4 prong)	240V; NEMA 14 – 30 (4 prong)
Included power cord length (in)	63" (full length)	63" (full length)
Drain hose length (in)	78" (full length)	78" (full length)
Door hinge	Right side (not reversible)	Right side (reversible)
Dimensions & Weight		
Overall dimensions (HxWxD) (in)	33 1/4" x 23 1/2" x 25"	33 1/4" x 23 1/2" x 25"
Net weight (lbs)	99	99
Minimum stack height (in)	67 3/4"	67 3/4"
ADA compliance	Meets ADA height and access requirements *when installed on pedestal*. Meets ADA operable parts requirements for controls and lint filter.	

24" Compact Dryers

800 Series
WTG86402UC

+ SuperQuick 15 Minute Cycle
+ Chrome Dial and Door Trim Design
+ Interior LED Light
+ Lowest Noise 63 dBA
+ AntiShrink Cycle

800 Series
WTG865H2UC

+ Home Connect™ Controls Dryer Remotely
+ Premium LED Controls with Enhanced Text and Icons
+ Illuminated Selection Jog Dial
+ Easy Start
+ Dry Level Adjust

+ Indicates a step-up feature

	800 Series	800 Series
	White – WTG86402UC	White – WTG865H2UC
General Properties		
Dryer type	Condensing	Condensing
Drum material	Stainless steel	Stainless steel
Interior light	Yes (LED)	Yes (LED)
Ventless drying (no ducting)	Yes	Yes
Stackable	Yes	Yes
Silence level (dBA)	63	63
Programs (No.), [Special]	(15), [Super Quick 15, Anti Shrink]	(14), [Super Quick 15, Anti Shrink]
Options (No.), [Special]	(6), [Dry Level, Finished In]	(8), [Remote Start, Dry level adjust]
Energy consumption (kWh / yr)	311	311
ENERGY STAR® qualified	Yes	No
Capacity		
Capacity (cu. ft.)	4.0	4.0
Relative load	18 bath towels	18 bath towels
Design Elements		
Door ring	Chrome	Chrome
Control type	Touch	Premium LED Touch
Dial	Chrome design, metal material	Illuminated jog dial
Bosch logo on door glass	Yes	Yes
Technical Details		
Energy source	Electric	Electric
Watts (W)	2,520	2,520
Circuit breaker (A)	30	30
Volts (V)	208 / 220 – 240	208 / 220 – 240
Current (A)	10.5	10.5
Frequency (Hz)	60	60
Plug type	240V; NEMA 14 – 30 (4 prong)	240V; NEMA 14 – 30 (4 prong)
Included power cord length (in)	63" (full length)	63" (full length)
Drain hose length (in)	78" (full length)	78" (full length)
Door hinge	Right side (reversible)	Right side (reversible)
Dimensions & Weight		
Overall dimensions (HxWxD) (in)	33 1/4" x 23 1/2" x 25"	33 1/4" x 23 1/2" x 25"
Net weight (lbs)	99	99
Minimum stack height (in)	67 3/4"	67 3/4"
ADA compliance	Meets ADA height and access requirements *when installed on pedestal*. Meets ADA operable parts requirements for controls and lint filter.	

24" Compact Washers

300 Series Dimensions and Installation

Dimensions in inches

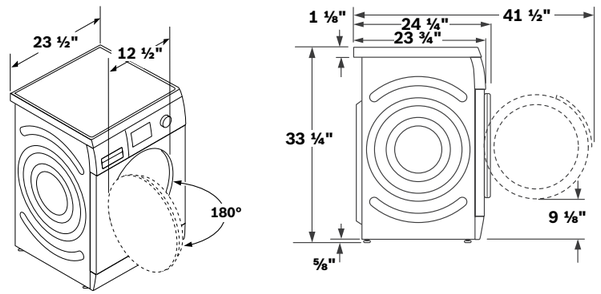

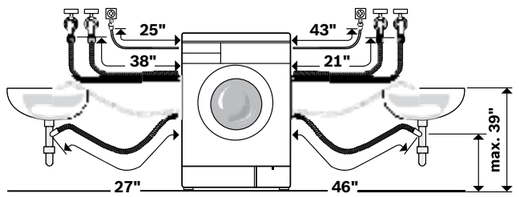

500 Series and 800 Series Dimensions and Installation

Dimensions in inches

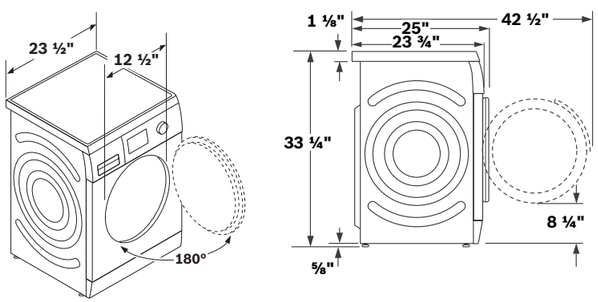

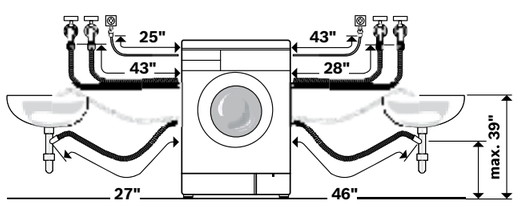

300 Series, 500 Series and 800 Series

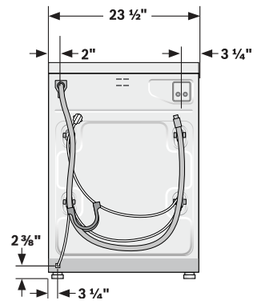

300 Series, 500 Series and 800 Series

Washer plugs into the dryer or properly installed 240V NEMA 6-15 wall receptacle.

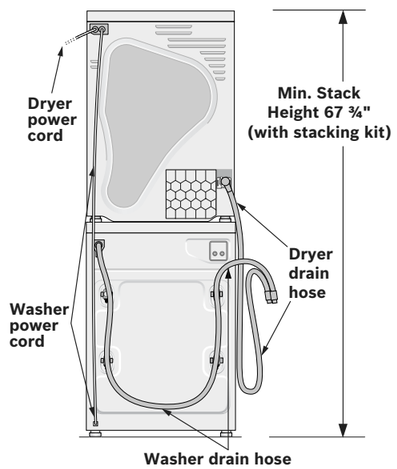

Optional Pedestal

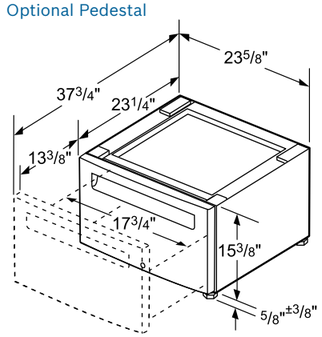

measurements in inches

Optional Accessories

WMZ20490 16" Pedestal (Washer)	P/N 645787 (500 & 800 Series) Short Stainless Steel Hose (If Needed for Plumbing Box Clearance with AQS Hose)

NOTE: See page 220 for details on installing under counter or in a closet.

24" Compact Dryers

Dryer Dimensions

Dimensions in inches

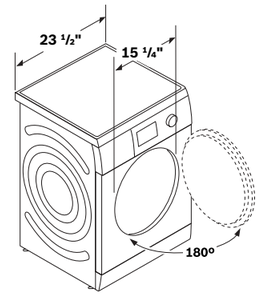

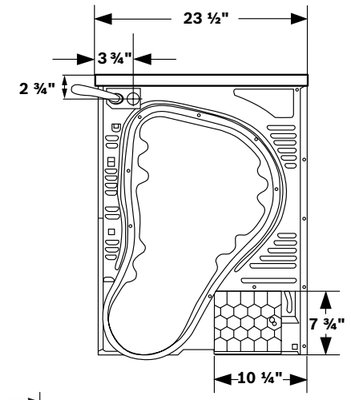

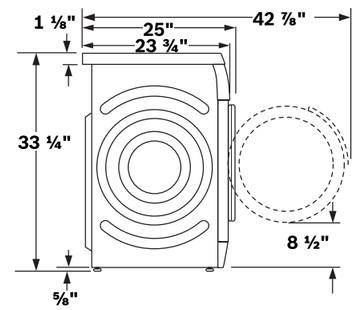

Optional Pedestal

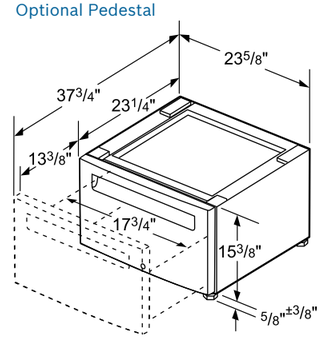

300 Series, 500 Series and 800 Series

Washer plugs into the dryer or properly installed 240V NEMA 6-15 wall receptacle.

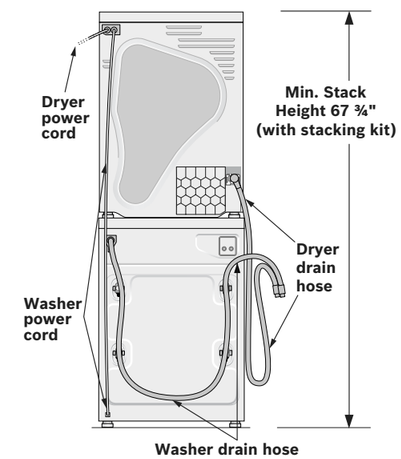

NOTE: See page 220 for details on installing under counter or in a closet.

Optional Accessories

WMZ20500 16" Pedestal (Dryer)	WTZ20410UC Stationary Stacking Kit	WTZ11400UC Stacking Kit with Pull Out Tray	WMZ20600 Drying Rack

24" Washers and Dryers Installed in Enclosure

Enclosure Dimensions

Under Counter: (Preferred)

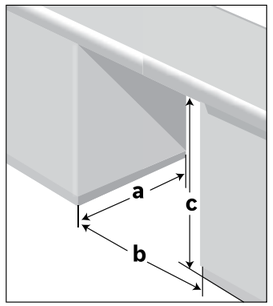

Front of the appliance fully open. No doors or coverings.

Under Counter: (Less Preferred)

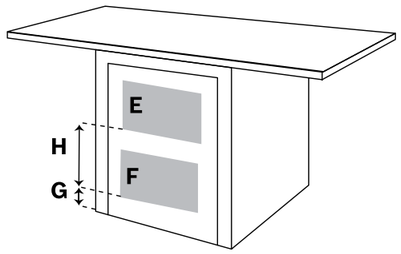

If the front of the appliance is covered, ventilation openings must be installed as shown and front/rear clearances adhered to according to closet installations.

Minimum opening dimensions	
a	28 in.
b	23 7/8 in.
c	34 1/2 in.
E & F are minimum area sizes	
E	63 sq. in.
F	63 sq. in.
G & H actual spacing dimensions for min. open area sizes	
G	3 in.
H	14 in.

Closet: Stacked

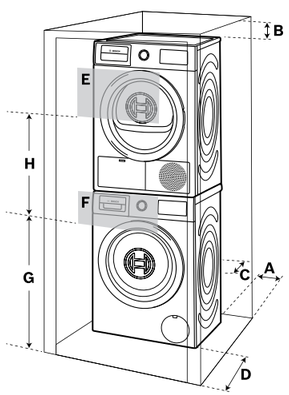

Closet: Stand Alone (shown) or Side by Side

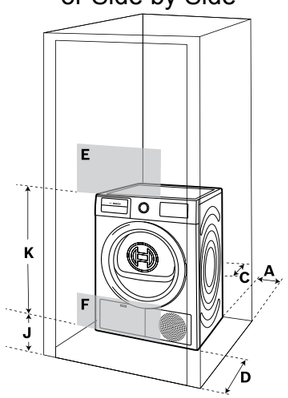

Clearance requirements (Minimum)	
A Both Sides	5/8 in.
B Top	6 1/4 in.
C Rear	2 1/2 in.
D Front	2 1/2 in.
Ventilation Area (Minimum)	
E Top	63 sq. in
F Bottom	63 sq. in.
Vent Spacing	
G	37 in.
H	26 in.
J	3 in.
K	29 in.

Enclosure Dimensions

Experience Bosch.

Bosch appliances are built with precision engineering and invented for life. Whether you would like to research our products, get inspired with kitchen design ideas, or have questions on the use and care of your product, simply browse our online resource library at bosch-home.com/us.

Get inspired. Start planning your dream kitchen today.

Visit the App Store® or Google Play™ to download our Kitchen Experience and Design Guide app.

Connect with us

- instagram.com/boschhomeus
- facebook.com/boschappliances
- youtube.com/boschhome
- twitter.com/boschhomeus
- pinterest.com/boschhomeus

Visit the above sites to get inspired and share photos of your new kitchen.

Come visit us at any of our beautiful showroom locations:

> BSH Experience & Design Center
17911 Von Karman, Suite 100
Irvine, CA 92614
949-224-4700

> BSH Experience & Design Center
222 Merchandise Mart, Suite 108
Chicago, IL 60654
312-832-3200

> A&D Building New York City
BSH Experience & Design Center
150 East 58th Street, Suite 700
New York, NY 10155
888-455-8892 or 212-588-0950

Get complete details at bosch-home.com/us/experience-bosch/showrooms

Apple and the Apple logo are trademarks of Apple Inc., registered in the U.S. and other countries. App Store is a service mark of Apple Inc. Google Play and the Google Play logo are trademarks of Google Inc.

Service you can trust 100%.

Please don't hesitate to contact us if you have questions on our product line, need advice about use and care, or would like to purchase accessories. We are ready to assist you.

Website

- How-to Videos
- Frequently Asked Questions
- Filters, Accessories and Parts
- Owner Manuals
- Product Registration
- Find a Dealer
- Find a Bosch Authorized Servicer

Bosch Home Appliances US:
www.bosch-home.com/us

Bosch Home Appliances Canada:
www.bosch-home.ca

Phone

- 24-Hour Call Center Access

1–800–944–2904

Warranty

- Lifetime Stainless Steel Rust-through Warranty for Dishwashers and Refrigerators
- One-year Limited Warranty on all Bosch Appliances
- See page 225 for additional warranty information

Important Note: Please refer to installation instructions prior to making cutout. BSH reserves the absolute and unrestricted right to change product materials and specifications, at any time, without notice. Consult the product's installation instructions for final dimensional data and other details. Applicable product warranty can be found in accompanying product literature or you may contact your account manager for further details. For more information on our entire line of products, go to www.bosch-home.com/us (Canada residents go to www.bosch-home.ca) or call 1–800–944–2904.

Warranty

Cooktops

Limited warranty, entire appliance, parts and labor (1 year)

Ovens

Limited warranty, entire appliance, parts and labor (1 year)

Microwaves

Limited warranty, entire appliance, parts and labor (1 year)

Built-in Coffee Machine

Limited warranty, entire appliance, parts and labor (1 year)

Ranges

Limited warranty, entire appliance, parts and labor (1 year)

Ventilation

Limited warranty, entire appliance, parts and labor (1 year)

Dishwashers

Limited warranty, entire appliance, parts and labor (1 year)

Limited warranty for microprocessor or printed circuit board; parts only (2nd to 5th year)

Limited warranty for racks (does not include rack components); parts only (2nd to 5th year)

Limited warranty for rust-through on inner tub liner; parts only (lifetime)

Refrigerators

Limited warranty, entire appliance, parts and labor (1 year)

Limited warranty for non-electronic components; parts only (1st to 2nd year)

Limited warranty for electronic components; parts only (2nd to 5th year)

Limited warranty for rust-through on stainless steel; parts only (lifetime)

24" Compact Laundry (Washers & Dryers)

Limited warranty, entire appliance, parts and labor (1 year)

Extended limited warranty from date of purchase (2 years)

Bosch will repair or replace, free of charge, any printed circuit boards, drive motor or component part of the drive motor that proves defective under conditions of normal home use during the first two years from the date of purchase, labor charges excluded.

Warranty Note: Bosch warrants that the Product is free from defects in materials and workmanship for a period of three hundred and sixty-five (365) days from the date of purchase. The foregoing timeline begins to run upon the date of purchase, and shall not be stalled, tolled, extended, or suspended, for any reason whatsoever. This Product is also warranted to be free from cosmetic defects in material and workmanship (such as scratches of stainless steel, paint/porcelain blemishes, chips, dents, or other damage to the finish of the Product, for a period of thirty (30) days from the date of purchase or closing date for new construction. This cosmetic warranty excludes slight color variations due to inherent differences in painted and porcelain parts, as well as differences caused by kitchen lighting, product location, or other similar factors. This cosmetic warranty specifically excludes any display, floor, "As Is", or "B" stock appliances.

Bosch Home Appliances
1901 Main Street, Suite 600
Irvine, CA 92614
1.800.944.2904

www.bosch-home.com/us (U.S.)
www.bosch-home.ca (Canada)

BSH reserves the absolute and unrestricted right to change product materials and specifications, at any time, without notice. Consult the product's installation instructions for final dimensional data and other details. Applicable product warranty can be found in accompanying product literature or you may contact your account manager for further details.

©2019 BSH Home Appliances Corporation.
All rights reserved. Bosch is a registered trademark of Robert Bosch GmbH.

3/19 Digital E-book MCG