Packaged Cooling & Gas/Electric Rooftops

Voyager™

12½-25 Tons — 60 Hz

Packaged Cooling (TC*)

Packaged Gas/Electric (YC*)

December 2006

RT-PRC024-EN

Introduction

Packaged Rooftop Air Conditioners

Through the years, Trane has designed and developed the most complete line of Packaged Rooftop products available in the market today. Trane was the first to introduce the Micro—microelectronic unit controls—and has continued to improve and revolutionize this design concept.

The ReliaTel control platform offers the same great features and functionality as the original Micro, with additional benefits for greater application flexibility.

Voyager continues to provide the highest standards in quality and reliability, comfort, ease of service, and the performance of Trane light commercial products.

Trane customers demand products that provide exceptional reliability, meet stringent performance requirements, and are competitively priced. Trane delivers with Voyager.

Voyager features cutting edge technologies: reliable compressors, Trane engineered ReliaTel controls, computer-aided run testing, and Integrated Comfort™ Systems. So, whether you're the contractor, the engineer, or the owner you can be certain Voyager Products are built to meet your needs.

It's Hard To Stop A Trane.®

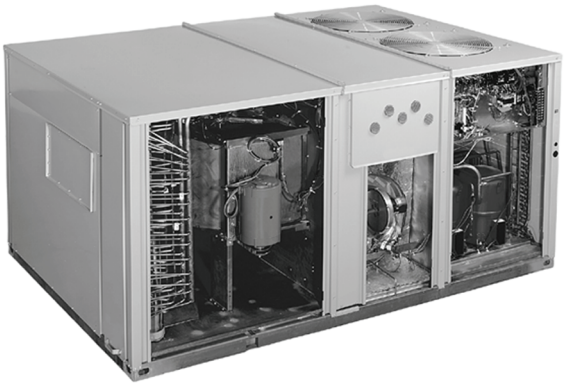

Packaged Gas/Electric

Packaged Cooling

© 2006 American Standard Inc. All rights reserved

Contents

Introduction 2
Features and Benefits 4
Application Considerations 11
Selection Procedure 12
Model Number Description 14
General Data 16
Performance Data 26
Controls 72
Electrical Data 74
Jobsite Connections 83
Typical Wiring 84
Dimensional Data 92
Weights 99
Mechanical Specifications 102

Features and Benefits

Standard Features

- 2″ throwaway filters provided on 12½-25 ton units
- 5-year Limited Compressor Warranty (12½-17½ tons); 1 year on 20 & 25 tons
- 5 year Limited Heat Exchanger (12½ - 17½ tons) 1 year on 20 & 25 tons
- 1-year Limited Parts Warranty
- Anti-Short Cycle Timer
- Belt Drive Motors
- Colored and Numbered Wiring
- Crankcase Heaters
- Dedicated Airflow
- Easy Access Low Voltage Terminal Board (LTB)
- Foil-Faced and Edge Captured Insulation
- High Efficiency Drum and Tube Heat Exchanger
- High Efficiency Gas Heat with Hot Surface Ignition
- High Pressure Cutout
- IAQ Sloped Condensate Drain Pan
- Liquid Line Refrigerant Drier
- Low Ambient Cooling to 0°F
- Operating Charge of R-22
- Patented Hybrid Condenser Coil for easy cleaning
- Provisions for Through-the-Base Gas and Condensate Drain Connections
- Quick Access Panels
- Quick Adjust Idler Arm Pulley
- ReliaTel Microprocessor Controls
- Single Point Power
- Single Side Service
- Standardized Components
- Trane built Scroll Compressors
- U-shaped Airflow Pattern

Options

Factory Installed Options[17]*

- 2″ Pleated Filters[7,3]
- Black Epoxy Pre-Coated Coils[7]
- Dehumidification Option[3,4,16]
- Differential Pressure Switches
- High Efficiency Motors[7]
- Hinged Access Doors
- Novar Return Air Sensor[9]
- Novar Unit Controls[8]
- Powered or Unpowered Convenience Outlet[6]
- Stainless Steel Heat Exchanger with 10 year warranty[7]
- Supply and/or Return Air Smoke Detector[4,13]
- Thermal Expansion Valve[16]
- Through the Base Electrical Access
- Through the Base Electrical with Circuit Breaker[14,15]
- Through the Base Electrical with Disconnect Switch[10,14,15]

Factory* or Field Installed Options[17]

- Barometric Relief
- Clogged Filter/Fan Failure Switch[4,7]
- Discharge Air Sensing Kit[4,7]
- Economizer (Downflow)[1]
- Electric Heaters[7,11,15]
- Frostat[3,4,7]
- LonTalk® Communications Interface (LCI)[7]
- Oversized Motors[7]
- Reference or Comparative Enthalpy[5,7]
- Tool-less Hail Guards[7]
- Trane Communications Interface (TCI)[2,7]

Most Factory Installed Options (FIOPS) available for Downflow Air Discharge units only. Please verify with ordering system for availability.

Explanation of Notes 1-17 located on page following Model Number Description.

Field Installed Options

- CO_2 Sensing
- Digital Display Zone Sensor
- Dual Thermistor Remote Zone Sensor
- Economizer (Horizontal)
- High Altitude Kit
- High and Low Static Drive Kits
- Humidity Sensor
- Low Static Drive
- LP Conversion Kit
- Manual Outside Air Damper
- Motorized Outside Air Dampers
- Powered Exhaust
- Quick Start Kit
- ReliaTel Options Module[12]
- Remote Potentiometer
- Roof Curb (Downflow Only)
- Thermostat
- Ventilation Override Accessory[4]
- Zone Sensors and Remote Zone Sensors

Other Benefits

- Cabinet design ensures water integrity
- Ease of Service, Installation and Maintenance
- Mixed model build enables “fastest in the industry” ship cycle times
- Outstanding Airflow Distribution
- ReliaTel Controls benefits
- Unmatched Product Support

Unmatched Support

Trane Sales Representatives are a Support Group that can assist you with:

- Product
- Application
- Service
- Training
- Special Applications
- Specifications
- Computer Programs and much more

Standard Features

Anti-Short Cycle Timer (Standard with ReliaTel)

Provides a 3 minute minimum "ON" time and 3 minute "OFF" time for compressors to enhance compressor reliability by assuring proper oil return.

Colored And Numbered Wiring

Save time and money tracing wires and diagnosing the unit.

Compressors

Voyager contains the best compressor technology available to achieve the highest possible performance. Dual compressors are outstanding for humidity control, light load cooling conditions and system back-up applications. Dual compressors are available on all models.

Condenser Coil

Voyager boasts a patent-pending 1+1+1 condenser coil, permanently gapped for easy cleaning.

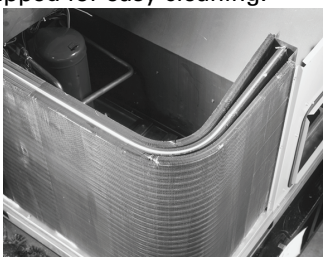

Controls – ReliaTel

ReliaTel microprocessor controls provide unit control for heating, cooling and ventilating utilizing input from sensors that measure indoor and outdoor temperature and other zone sensors. ReliaTel also provides outputs for building automation systems and expanded diagnostics. For a complete list of ReliaTel offerings, refer to the "Other Benefits" section within the Features and Benefits section of this catalog.

Conversionless Units

The dedicated design units (either downflow or horizontal) require no panel removal or alteration time to convert in the field — a major cost savings during installation.

Horizontal units come complete with duct flanges so the contractor doesn't have to field fabricate them. These duct flanges are a time and cost saver.

Crankcase Heaters

These band or insertion heaters provide improved compressor reliability by warming the oil to prevent migration during off-cycles or low ambient conditions. These are standard on all Voyager models.

Efficiencies

Standard or High Efficiency Cooling available.

Easy Access Low Voltage Terminal Board

Voyager's Low Voltage Terminal Board is external to the electrical control cabinet. It is extremely easy to locate and attach the thermostat wire and test operation of all unit functions. This is another cost and time saving installation feature.

Foil Faced Insulation

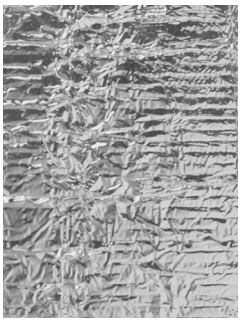

All panels in the evaporator section of the unit have cleanable foil-faced insulation. All edges are either captured or sealed to ensure no insulation fibers get into the airstream.

Heat Exchanger - Drum and Tube

The cabinet features a drum and tube heat exchanger that is manufactured using aluminized steel with stainless steel components for maximum durability. The requirement for cycle testing of heat exchangers is 10,000 cycles by ANSI Z21.47. This is the standard required by both UL and AGA for cycle test requirements. Trane requires the design to be tested to 2½ times this current standard. The drum and tube design has been tested and passed over 150,000 cycles, which is over 15 times the current ANSI cycling requirements.

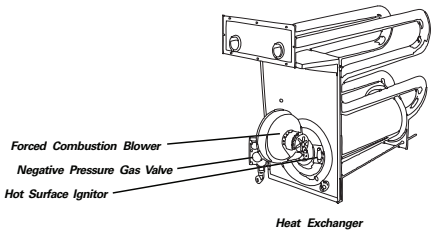

The negative pressure gas valve will not allow gas flow unless the combustion blower is operating. This is one of our unique safety features.

The forced combustion blower supplies pre-mixed fuel through a single stainless steel burner screen into a sealed drum where ignition takes place. It is more reliable to operate and maintain than a multiple burner system.

The hot surface ignitor is a gas ignition device which doubles as a safety device utilizing a continuous test to prove the flame. The design is cycle tested at the factory for quality and reliability.

Our gas/electric rooftops exceed all California seasonal efficiency requirements and perform even better than the California NOx emission requirements.

Low Ambient Cooling

All Voyager microprocessor units have cooling capabilities down to 0°F as standard.

Low Voltage Connections

The wiring of the low voltage connections to the unit and the zone sensors is as simple as 1-1, 2-2, and 3-3. This simplified system makes it easy for the installer to wire.

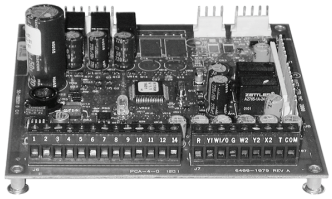

Motors

All indoor fan motors are belt drive as standard.

Pressure Cutouts

Low and high pressure cutouts are standard on all Voyager models.

Quick-Access Panels

Remove three or more screws for access to the standardized internal components and wiring.

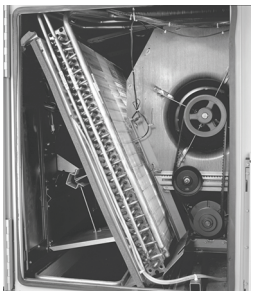

Quick-Adjust Slider Plate

With the Quick-Adjust Slider Plate, the belt and sheaves can be quickly adjusted without moving the mounted fan motor. The result is a major savings in time and money.

Single Point Power

A single electrical connection powers the unit.

Single Side Service

Single side service is standard on all units.

Sloped Drain Pans

Every Voyager unit has a non-corrosive, sloped drain pan made of pre-painted steel and standard on all units.

Standardized Components

Components are placed in the same location on all Voyager units. Familiarize yourself with one Voyager and you are familiar with every Voyager.

Due to standardized components throughout the Voyager line, contractors/owners can stock fewer parts.

Through the Base Condensate

Every unit includes provisions for through the base condensate drain connections. This allows the drain to be connected through the roof curb instead of a roof penetration.

Variety of Options*

Factory Installed Options

Black Epoxy Pre-Coated Coils

The pre-coated coils are an economical option for protection in mildly corrosive environments.

Circuit Breaker (Required with Through- the-Base Electrical)

This option is a factory installed thermal magnetic, molded case, HACR Circuit Breaker with provisions for through the base electrical connections. Available on all downflow models.

Disconnect Switch (Required with Through-the-Base Electrical)

Factory installed 3-pole, molded case, disconnect switch with provisions for through the base electrical connections are available.

Available on all downflow models.

Codes require a method of assured unit shutdown for servicing. Field-installed disconnects sometimes interfere with service access. Factory installation of unit disconnects reduces costs, assures proper mounting and provides the opportunity to upgrade to unit circuit breaker protection.

Dehumidification (Hot Gas Reheat) Option

This option allows for increased outdoor air ventilation. It reduces humidity levels while increasing comfort level in the air space. Cooling can operate without a demand for dehumidification. The hot gas reheat coil is designed to deliver maximum reheat temperatures.

Hinged Access Doors

These doors permit easy access to the filter, fan/heat, and compressor/control sections. They reduce the potential roof damage from screws or sharp access door corners.

Motors

Factory or field installed oversized motors available for high static applications are available.

High Efficiency motors are also available with efficiency ratings from 86.5 up to 91.0. It is not available for all models.

Novar Unit Controls

Novar 3051 and 2024 are available for Voyager Cooling and Gas/Electric models.

Powered or Unpowered Convenience Outlet

This option is a GFCI, 120v/15amp, 2 plug, convenience outlet, either powered or unpowered. This option can only be ordered when Through the Base Electrical with either the Disconnect Switch or Circuit Breaker

option is ordered. This option is available on all downflow models.

Stainless Steel Heat Exchanger

The optional stainless steel heat exchanger is constructed of 304 stainless steel. It is resistant to corrosion and oxidation and easy to clean.

The high strength to weight ratio allows for high ventilation rates with gas units. It is an excellent option to compliment the dehumidification option as a high outside air ventilation unit.

With this option, a 10-year stainless steel heat exchanger warranty is standard.

Supply and/or Return Air Smoke Detector

With this option installed, if smoke is detected, all unit operation will be shut down. Reset will be manual at the unit. Return Air Smoke Detectors require minimum allowable airflow when used with certain models.

Thermal Expansion Valve

Available for a wider range of applications. This is available on high efficiency models.

Through-the-Base Electrical Utility Access

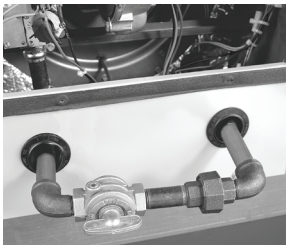

An electrical service entrance shall be provided allowing electrical access for both control and main power connections inside the curb and through the base of the unit. Option will allow for field installation of liquid-tight conduit and an external field installed disconnect switch.

Factory provided through the base openings simplify wiring and piping. Because these utility openings frequently minimize the number of roof penetrations, the integrity of roofing materials is enhanced.

Two-Inch Pleated Filters

2″ pleated media filters are offered as an option on all Voyager units for jobs with enhanced Indoor Air Quality (IAQ) requirements.

Refer to Model Number Description for option availability.

Factory or Field Installed Options*

Barometric Relief

Designed to be used on downflow units, barometric relief is an unpowered means of relieving excess building pressure.

Clogged Filter/Fan Failure Switch

A dedicated differential pressure switch is available to achieve active fan failure indication and/or clogged filter indication.

These sensors allow a zone sensor service light or Integrated Comfort System to indicate a dirty filter or a fan that's not working. The field installation charges for these valuable feedback devices often eliminate them from consideration. Factory installation can make such features a good investment.

Discharge Air Sensing Kit

Provides true discharge air sensing in heating models. The kit is functional only with the ReliaTel Options Module.

Electric Heaters

Electric heat modules are available within the basic unit. If ordering the Through the Base Electrical option with an Electrical Heater, the heater must be factory installed.

Fresh Air Options – Dampers and Economizer

0 - 25% manual or 0 - 50% motorized outside air hoods are available.

Economizers are equipped with either dry bulb or reference or comparative enthalpy sensing. These economizers provide free cooling as the outdoor temperature and/or humidity decreases. Correctly installed, they offer a valuable energy savings. Factory-installed economizers save time and ensure proper installation.

Frostat

This capillary bulb embedded in the face of the evaporator coil monitors coil temperature to prevent evaporator icing and protect the compressor. Recommended for applications with low leaving air temperatures, low airflow and or high latent load applications.

LonTalk® Communications Interface

The LonTalk communications interface allows the unit to communicate as a Tracer™ LCI-V device or directly with generic LonTalkNetwork Building Automation System Controls.

Oversized Motors

Factory or field installed oversized motors available for high static applications.

Reference or Comparative Enthalpy

Measures and communicates humidity while maximizing comfort control.

Tool-less Hail Guards

Tool-less, hail protection quality coil guards shall be either factory or field-installed for condenser coil protection. This option protects the condenser coil from vandalism and/or hail damage.

Trane Communication Interface (TCI)

Available factory or field installed. This module when applied with the ReliaTel™ easily interfaces with Trane's Integrated Comfort™ System.

Refer to Model Number Description for option availability.

Field Installed Options*

CO_2 Sensing

The CO_2 sensor has the ability to monitor space occupancy levels within the building by measuring the parts per million of CO_2 (Carbon Dioxide) in the air. As the CO_2 levels increase, the outside air damper modulates to meet the CO_2 space ventilation requirements. The CO_2 sensor kit is available as a field installed accessory.

Digital Display Zone Sensor

The Digital LCD (Liquid Crystal Display) zone sensor has the look and functionality of standard zone sensors. This sensor should be utilized with ReliaTel™ controls.

Dual Thermistor Remote Zone Sensor

This sensor will reduce the total number of remote sensors to obtain space temperature averaging. This sensor should be utilized with ReliaTel controls.

High Altitude Kit

Previously a Canadian Agency requirement for units applied about 2000 feet, it is not required by the U.S. Domestic contractors should consult with local authority on best practice. Devates gas orifices by 10%.

High Static Drive

Available on many models, this high static drive accessory extends the capability of the standard motor. Avoid expensive motors and operating costs by installing this optimized sheave accessory.

Humidity Sensor/Humidistat

Used in conjunction with our Dehumidification (Hot Gas Reheat) units to provide outstanding humidity control and comfort. Humidity sensors can be wall or duct mounted and set for levels between 40% and 60%.

LP Conversion Kit

Provided for field conversion of gas/electric units from Natural gas to Propane.

Powered Exhaust Option

This option is available on downflow units and provides exhaust of the return air, when using a downflow economizer, to maintain proper building pressurization. Great for relieving most building overpressurization problems.

Remote Potentiometer

When properly installed in the economizer control circuitry, this accessory provides a remote variable resistance to enable the operator to adjust the minimum damper position.

Roof Curbs

Available for downflow units. Only two roof curbs for the entire Voyager line simplifies curb selection.

Static Drive Accessories

Available on many models, this high and low static drive accessories extend the capability of the standard motor. Avoid expensive motors and operating costs by installing this optimized sheave accessory.

Ventilation Override Accessory

With the Ventilation Override Accessory installed, the unit can be set to transition to up to 3 different pre-programmed sequences for Smoke Purge, Pressurization, and Exhaust. The transition occurs when a binary input on the RTOM is closed (shorted). This would typically be a hard wired relay output from a smoke detector or fire control panel. The ventilation override kit is available as a field installed accessory.

Zone Sensors/Thermostats

Available in programmable, automatic and manual styles.

Refer to Model Number Description for option availability.

Other Benefits

Airflow Distribution

Airflow is outstanding. The Voyager can replace an older machine with old ductwork and, in many cases, improve the comfort through better air distribution. The U-shaped airflow allows for improved static capabilities.

Cabinet Integrity

For added water integrity, Voyager has a raised 1 1/8" lip around the supply and return of the downflow units to prevent water from blowing into the ductwork.

Easy to Install, Service and Maintain

Because today's owners are very cost-conscious when it comes to service and maintenance, the Trane Voyager was designed with direct input from service contractors. This valuable information helped to design a product that would get the serviceman off the job quicker and save the owner money. Voyager does this by offering outstanding standard features enhanced by a variety of factory and field installed options, multiple control options, rigorously tested proven designs and superior product and technical support.

ReliaTel™ Controls

ReliaTel controls provide unit control for heating, cooling and ventilating utilizing input from sensors that measure outdoor and indoor temperature.

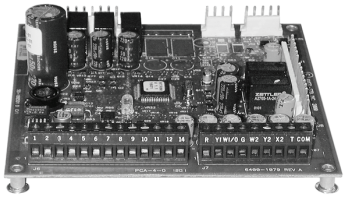

ReliaTel Control Logic Enhances Quality and Reliability

—prevents the unit from short cycling, considerably improving compressor life.

—ensures that the compressor will run for a specific amount of time which allows oil to return for better lubrication, enhancing the reliability of the compressor.

Voyager with ReliaTel reduces the number of components required to operate the unit, thereby reducing possibilities for component failure.

ReliaTel Makes Installing and Servicing Easy

ReliaTel eliminates the need for field installed anti-shortcycle timer and time delay relays. ReliaTel controls provide these functions as an integral part of the unit. The contractor no longer has to purchase these controls as options and pay to install them.

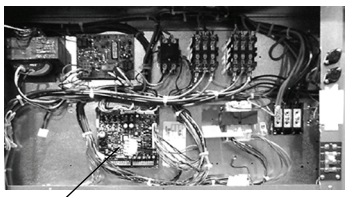

ReliaTel™

The wiring of the low voltage connections to the unit and the zone sensors is as easy as 1-1, 2-2, and 3-3. This simplified system makes wiring easier for the installer.

ReliaTel Makes Testing Easy

ReliaTel requires no special tools to run the Voyager unit through its paces. Simply place a jumper between Test 1 and Test 2 terminals on the Low Voltage Terminal Board and the unit will walk through its operational steps automatically.

The unit automatically returns control to the zone sensor after stepping through the test mode a single time, even if the jumper is left on the unit.

As long as the unit has power and the "system on" LED is lit, ReliaTel is operational. The light indicates that the controls are functioning properly.

ReliaTel features expanded diagnostic capabilities when utilized with Trane Integrated Comfort™ Systems.

Some zone sensor options have central control panel lights which indicate the mode the unit is in and possible diagnostic information (dirty filters for example).

Other ReliaTel Benefits

The ReliaTel built-in anti-shortcycle timer, time delay relay and minimum "on" time control functions are factory tested to assure proper operation.

ReliaTel softens electrical "spikes" by staging on fans, compressors and heaters.

Intelligent Fallback is a benefit to the building occupant. If a component goes astray, the unit will continue to operate at predetermined temperature setpoint.

Intelligent Anticipation is a standard ReliaTel feature. It functions continuously as ReliaTel and zone sensor(s) work together in harmony to provide much tighter comfort control than conventional electro-mechanical thermostats.

The same ReliaTel Board fits all Voyager Packaged Gas/Electrics, Cooling, and Heat Pump models. This provides standardization of parts for contractors. Less money is tied up in inventory with ReliaTel.

VariTrac – Building Automation System

When Trane's changeover VAV System for light commercial applications is coupled with Voyager, it provides the latest in technological advances for comfort management systems and can allow thermostat control in every zone served by VariTrac.

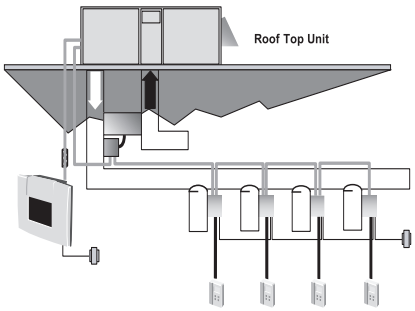

Rigorous Testing

All of Voyager's designs were rigorously rain tested at the factory to ensure water integrity.

Actual shipping tests were performed to determine packaging requirements. Units were test shipped around the country to determine the best packaging. Factory shake and drop tests were used as part of the package design process to help assure that the unit arrives at the job site in top condition.

Rigging tests include lifting a unit into the air and letting it drop one foot, assuring that the lifting lugs and rails hold up under stress.

We perform a 100% coil leak test at the factory. The evaporator and condenser coils are leak tested at 200 psig and pressure tested to 450 psig.

All parts are inspected at the point of final assembly. Sub-standard parts are identified and rejected immediately.

Every unit receives a 100% unit run test before leaving the production line to make sure it lives up to rigorous Trane requirements.

Voyager units incorporate either a one piece top or the Trane-Tite-Top (T^3). Each part of the top (either two or three pieces) overlaps in such a way that water cannot leak into the unit. These overlapped edges are gasketed and sealed to ensure superior water integrity.

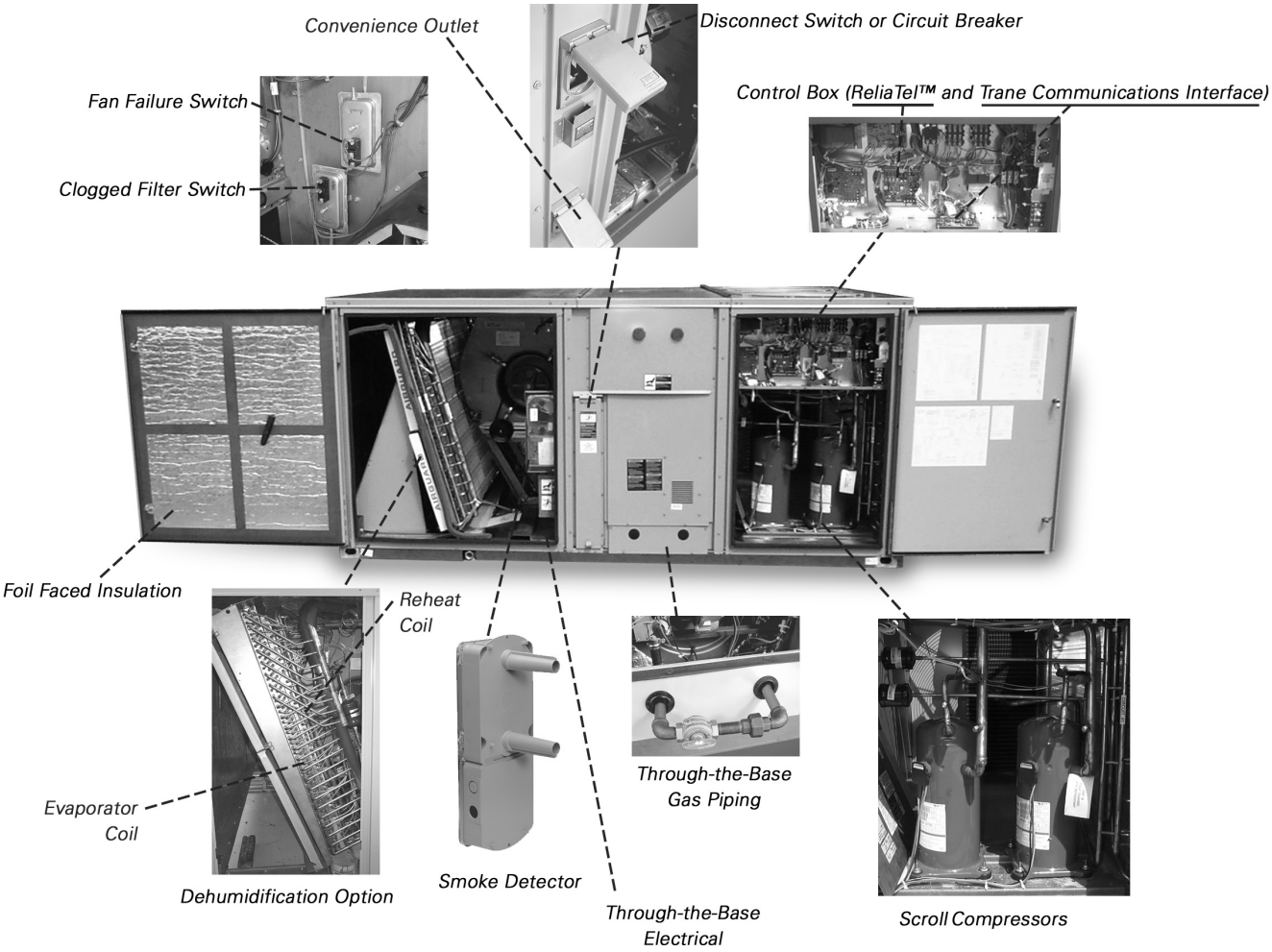

Figure 1. Voyager Factory Installed Options

Application Considerations

Application of this product should be within the cataloged airflow and cooling considerations.

Barometric Relief

This product line offers an optional barometric relief damper for use in conjunction with economizer option. This accessory consists of gravity dampers which open with increased pressure. As the building air pressure increases, the pressure in the unit return air section also increases, opening the dampers and relieving the conditioned space.

Note: *The effectiveness of barometric relief damper during economizing operation is system related.*

Note: *Pressure drop of the return air system should be considered to control building pressurization.*

Black Epoxy Coil

The coils are manufactured with a thermoset, vinyl coating that is bonded to the aluminum fin stock prior to the fin stamping process. These coils are an economical option for protection in mildly corrosive environments.

Note: *Not to be used where seacoast applications exist.*

Clearance Requirements

The recommended clearances identified with unit dimensions should be maintained to assure adequate service maximum capacity and peak operating efficiency. Actual clearances which appear inadequate should be reviewed with the local Trane sales personnel.

Condensate Trap

The evaporator is a draw-thru configuration. A trap must be field provided prior to start-up on the cooling cycle.

Heating Operation

The heat exchanger is manufactured with aluminized steel. To prevent condensation within the heat exchanger, do not exceed 50% outside air or a minimum mixed air temperature of 40°F.

Optional Stainless Steel Heat Exchanger

The optional stainless steel heat exchanger is manufactured with 304 stainless steel. To prevent corrosion and prolong heat exchanger reliability, the minimum mixed air temperature allowed across the heat exchanger is 20°F.

The stainless steel heat exchanger option is an excellent option that compliments the dehumidification package. Whenever high outside air or outside applications exist, these options should be utilized.

Low Ambient Cooling

The Voyager™ line features, with ReliaTel™ microprocessor controls, low ambient cooling down to 0°F. The following options need to be included/considered when low ambient applications are required: continuous fan operation, crankcase heaters (standard), thermal expansion valves, frostat.

Contact your local Trane Representative for more assistance with low ambient cooling applications.

Unit Pitch

These units have sloped condensate drain pans. Units must be installed level. Any unit slope must be toward access side of the unit.

Selection Procedure

Cooling Capacity

Note: *Cooling Capacity Procedure is the same for cooling (TC*) and gas/electric (YC*).*

Step 1.

Calculate the building's total and sensible cooling loads at design conditions. Use the Trane calculation methods or any other standard accepted method.

Factors used in unit selection:

Total Cooling Load: 180 MBh
Sensible Cooling Load: 129 MBh
Airflow: 6000 cfm
Electrical Characteristics: 460/60/3
Summer Design Conditions:
Entering Evaporator Coil: 80 DB, 67 WB Outdoor Ambient: 95 DB
External Static Pressure: 0.49 in. wg
Rooftop - downflow configuration
Accessories

- Roof curb
- Economizer
- Electric Heat

Step 2.

As a starting point, a rough determination must be made of the size of the unit. The final selection will be made after examining the performance at the given conditions. Divide the total cooling load by nominal BTUH per ton (12 MBh per ton); then round up to the nearest unit size.

180 MBh / 12 MBh = 15.0 tons

Step 3.

Table 7 shows that a TCD180B4 has a **gross** cooling capacity of 184 MBh and 130 MBh sensible capacity at 6000 cfm and 95 DB outdoor ambient with 80 DB, 67 WB air entering the evaporator.

To Find Capacity at Intermediate Conditions Not in the Table.

When the design conditions are between two numbers that are in the capacity table, interpolation is required to approximate the capacity.

Note: *Extrapolation outside of the table conditions is not recommended.*

Step 4.

In order to select the correct unit which meets the building's requirements, the fan motor heat must be deducted from the gross cooling capacity. The amount of heat that the fan motor generates is dependent on the effort by the motor - cfm and static pressure. To determine the total unit static pressure you add the external static pressure to the additional static related by the added features:

External Static Duct System	0.49 wg
Standard Filter 1 in. from Table 54	0.10 wg
Economizer from Table 56 Table 54 (100% Return Air)	0.04 wg
Electric Heater Size 36 kW from Table 54 (reference "Heating Capacity" section on this page for determination of heater size).	0.07 wg
No additional static add for gas/heat exchanger.	
Total Static Pressure	0.60 wg

Note: *The Evaporator Fan Performance Table 24 has already accounted for the pressure drop for standard filters and wet coils (see note below Table 24). Therefore, the actual total static pressure is 0.60 -0.10 (from Table 54 = 0.50 wg.*

With 6000 cfm and 0.50 wg. *Table 24* shows 2.56 bhp for this unit. Note below the table gives a formula to calculate Fan Motor Heat,

3.15 x bhp = MBh.

3.15 x 2.56 = 8.06 MBh.

Now subtract the fan motor heat from the gross cooling capacity of the unit:

Net Total Cooling Capacity
= 184 MBh - 8.06 = 175.9 MBh.

Net Sensible Cooling Capacity
= 130 MBh - 8.06 = 121.9 MBh.

Step 5.

If the performance will not meet the required load of the building -total or sensible cooling load, try a selection at the next higher size unit.

Heating Capacity

Note: *Heating capacity procedure DIFFERS for cooling (TC*) and gas/electric (YC*) units.*

Step 1.

Calculate the building heating load using the Trane calculation form or other standard accepted method.

Step 2.

Size the system heating capacity to match the calculated building heating load. The following are building heating requirements:

TC* cooling units:
460 volt/3 phase Power Supply
Total heating load of 115.0 MBH
6000 cfm

The electric heat accessory capacities are listed in Table 56. From the table, a 36 kw heater will deliver 122.94 MBh at 480 volts. In order to determine capacity at 460 volts, the heater voltage correction factor from Table 57 must be used. Therefore, 122.94 MBh x .94 (voltage correction factor) = 115.6 MBh.

YC* gas/electric: Fuel natural gas total heating load of 195 MBh. Table 24 shows 250 MBh and 350 MBh input models. The output capacities of these furnaces are 203 MBh and 284 MBh respectively. The low heat model with 203 MBh output best matches the building requirements.

Air Delivery Selection

Note: *Air Delivery procedures is the same for cooling (TC*) and gas/electric (YC*) units.*

External static pressure drop through the air distribution system has been calculated to be 0.50 inches of water. From Table 54 static pressure drop through the economizer is 0.04 and the 36 kw heater is 0.07 inches of water (0.49 + 0.04 + 0.07). Enter Table 54 for a TCD180B4 at 6000 cfm and 0.50 static pressure. The standard motor at 777 rpm will give the desired airflow at a rated bhp of 2.71.

Dehumidification Selection

Note: *Dehumidification selection procedure is the same for both cooling (TCD) and gas/ electric (YCD) models. Determine normal unit cooling and heating capacities as previously described in the selection procedures on prior page.*

Typical 20 ton TFD241C
6400 cfm Total Supply airflow
2560 cfm Outside Air (40%)
3840 cfm Return Air
0.41" External Static Pressure

OA Conditions
Part load day and raining
68°F db
67°F wb
66.5 dp
95% RH
RA' conditions
75°F db
63°F wb
52% RH
55.9 dp

Step 1:

Determine the mixed/entering air condition (MA)

MA = (% outside air*outside air drybulb temperature) + (% return air*return air dry-bulb temperature)
MA = (0.40*68°F) + (0.60*75°F)
MA = 72.20°F db

Note: *Repeat for wet-bulb temperature (wb).*

Plot on psychrometric chart.

MA
72.2°F db
64.7°F wb

Step 2:
Determine the additional static pressure drop for a reheat unit

Table 54 shows a static pressure drop of 0.35" for the reheat coil and an additional .04 for the mandatory 2" pleated filters required when ordering the dehumidification option. Total static pressure=

1.0 + 0.035 + 0.04 = 1.075

(≅1.1 for manual calculations)

Do not forget to also add any additional static from other accessories.

Table 45 (airflow table for 20 ton dehumidification units) indicates that a standard motor and drive is needed for this airflow and static pressure range.

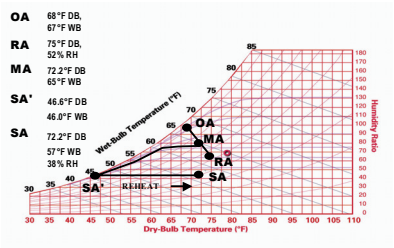

Figure 2. Psychrometric Chart

Step 3a:

Determine leaving evaporator temperature (SA')

Leaving Evaporator Temperature = SA'

Utilizing the manual **Cooling Capacity** selection method as previously described, find the leaving evaporator temperatures with the formula:

$$\Delta \text{ Temp} = \frac{\text{gross sensible or gross latent cooling capacity in Btuh}}{(\text{cfm})\ (1.085)}$$

Subtract your sensible Δ temp from the entering db and latent Δ temp from the entering wb to determine the leaving evaporator db & wb (temperatures without the addition of fan heat).

51.7 db
51.03 wb

Connect MA and SA' on psychrometric chart with cooling curve.

Step 3b:

Determine leaving unit temperature in standard cooling mode

Repeat Step 3a substituting **net** sensible or latent capacity for **gross** sensible or latent capacity to find the leaving unit temperature including fan heat.

48.9 db 53.6 db

47.0 wb 51 wb

84% RH

49% dp

Step 4:

Determine reheat temperature rise Using the leaving evaporator temp, go to Table 59 and find the reheat temperature rise for that particular cfm: 17.55°F db

Note: *Reheat temperature rise is based on supply airflow and leaving evaporator coil temperature.*

Step 5:

Determine leaving unit sensible temperature with reheat active (SA)
Reheat temperature (obtained in step 3) + (SA' + fan heat) = SA
(SA' + fan heat) = leaving unit temperature in standard cooling mode from step 3b.

17.55°F db + 53.6°F = 71.2°F db

SA=71.2°F

Since reheat adds only sensible heat, the dewpoint temperature will remain constant so follow the dewpoint temperature line across the psychrometric chart to find the new wb temperature.

51 wb

29.4 dp

20.8 RH

Consider the Psychrometric Chart. If the space relative humidity is equal to or above the space relative humidity setpoint, the Dehumidification option will:

- Energize compressor or both compressors (2 stage compressor units).
- Hot gas reheat valve is energized and hot gas is diverted to the reheat coil.
- Dehumidification/reheat is terminated when space humidity is reduced to 5% below relative humidity setpoint.

At MA, air enters the RTU. The RTU filters, cools, and dehumidifies the air as it moves through the evaporator coil. Air leaves the evaporator coil saturated at the preset dew point condition (SA') and is reheated by the hot gas reheat coil to deliver 71°F (SA) supply air to the space.

Model Number Description

T C	D	150	C	3	0	0	A	A
1 2	3	456	7	8	9	10	11	12

DIGIT 1,2 — UNIT TYPE

TC	Packaged Cooling, Electric Heat
TF	With Factory Installed Options
YC	Packaged Gas/Electric
YF	With Factory Installed Options

DIGIT 3 — AIRFLOW CONFIGURATION

D	Downflow
H	Horizontal

DIGIT 4,5,6 — NOMINAL GROSS COOLING CAPACITY (MBh)

150	12½ Tons Standard Efficiency
151	12½ Tons High Efficiency
180	15 Tons Standard Efficiency
181	15 Tons High Efficiency
210	17½ Tons Standard Efficiency
211	17½ Tons High Efficiency
240	20 Tons Standard Efficiency
241	20 Tons High Efficiency
300	25 Tons Standard Efficiency
301	25 Tons High Efficiency

DIGIT 7 — MAJOR DESIGN SEQUENCE

DIGIT 8 — VOLTAGE SELECTION

3	208-230/60/3
4	460/60/3
W	575/60/3
K	380/60/3

DIGIT 9,10 — FACTORY INSTALLED OPTIONS

Note: *(Applicable to Digit 1, 2 T models only)*

00	No Factory-installed Options
0A	Factory-installed Economizer
0B	Oversized Motor
0C	Downflow Economizer and Oversized Motor
0F	Trane Communications Interface (TCI)
0G	Downflow Economizer and TCI
0H	TXV/Face-Split Evaporator
0J	Oversized Motor and TXV Face-Split Evaporator
0K	Downflow Economizer, Oversized Motor, and TXV Face-Split Evaporator
0L	Downflow Economizer with TXV/Face-Split Evaporator
0M	Reheat Coil
0N	Downflow Economizer and Reheat Coil
0P	Oversized Motor and Reheat Coil
0R	Downflow Economizer, Oversized Motor and Reheat Coil

DIGIT 9 — HEATING CAPACITY

Note: *(Applicable to Digit 1, 2 Y models only)*

L	Low Heat
M	Medium Heat
H	High Heat

DIGIT 10 — FACTORY INSTALLED OPTIONS[17]

Note: *(Applicable to Digit 1, 2 Y models only)*

0	Packed Stock, No Options
A	Downflow Economizer[1]
B	Oversized Motor[7]
C	Downflow Economizer and Oversized Motor[1]
F	Trane Communications Interface (TCI)[2,7]
G	Downflow Economizer and TCI[1,2]
H	TXV/Face-Split Evaporator[16]
J	Oversized Motor and TXV/Face Split Evaporator[16]
K	Downflow Economizer, Oversized Motor, and TXV/Face Split Evaporator[1,16]
L	Downflow Economizer with TXV Face-Split Evaporator[7,16]
M	Reheat Coil[3,16]
N	Downflow Economizer and Reheat Coil[1,3,16]
P	Oversized Motor and Reheat Coil[1,3,16]
R	Downflow Economizer, Oversized Motor and Reheat Coil[1,3,16]

DIGIT 11 — MINOR DESIGN SEQUENCE

DIGIT 12 — SERVICE SEQUENCE

Note: *Explanation of Model Number Notes located on the following page.*

Note: *Most Factory Installed Options (FIOPS) available for Downflow Air Discharge units only. Please verify with ordering system for availability.*

Options

***Factory Installed Options**[17]

- 2" Pleated Filters[7,3]
- Black Epoxy Pre-Coated Coils[7]
- Dehumidification Option[3,14,16]
- Differential Pressure Switches
- High Efficiency Motors[7]
- Hinged Access Doors
- Novar Return Air Sensor[9]
- Novar Unit Controls[8]
- Powered or Unpowered Convenience Outlet[6]
- Stainless Steel Heat Exchanger with 10-year warranty[7]
- Supply and/or Return Air Smoke Detector[4,13]
- Thermal Expansion Valve[16]
- Through the Base Electrical Access
- Through the Base Electrical with Circuit Breaker[14,15]
- Through the Base Electrical with Disconnect Switch[10,14,15]

***Factory* or Field Installed Options**[17]

- Barometric Relief
- Clogged Filter/Fan Failure Switch[4,7]
- Discharge Air Sensing Kit[4,7]
- Economizer (Downflow)[1]
- Electric Heaters[7,11,15]
- Frostat[3,4,7]
- LonTalk® Communications Interface (LCI)[7]
- Oversized Motors[7]
- Reference or Comparative[5,7] Enthalpy
- Tool-less Hail Guards[7]
- Trane Communications Interface (TCI)[2,7]

Field Installed Options

- CO_2 Sensing
- Digital Display Zone Sensor
- Dual Thermistor Remote Zone Sensor
- Economizer (Horizontal)
- High Altitude Kit
- High and Low Static Drive Kits
- Humidity Sensor
- Low Static Drive
- LP Conversion Kit
- Manual Outside Air Damper
- Motorized Outside Air Dampers
- Powered Exhaust
- Quick Start Kit
- ReliaTel Options Module[12]
- Remote Potentiometer
- Roof Curb (Downflow Only)
- Thermostat
- Ventilation Override Accessory[4]
- Zone Sensors and Remote Zone Sensors

Model Number Notes

1. Some field set up required.
2. TCI is for use with non-VariTrac systems and VariTrac systems.
3. All 10th digit model numbers including reheat coil (M,N,P,R) require additional factory installed options; ReliaTel™ options module, Frostat, and 2" pleated filters.
4. Requires ReliaTel options module.
5. Requires Economizer.
6. Must be ordered with Through-the-Base Electrical option and either Unit Mounted Disconnect or Circuit Breaker.
7. Available factory installed on downflow AND horizontal units. Verify with ordering system.
8. The Novar control option includes the following factory installed and wired devices: Novar ETM-2024 or Novar 3051 rooftop controller, fan proving switch, clogged filter or unit shutdown switch, Cool 1, Cool 2, Heat switch and discharge air sensor (downflow only).

   Note: *Option cannot be ordered in conjunction with FIOPS Smoke Detector option.*
9. This option consists of the Novar return air sensor (Novar #WTS-10) that is wired and shipped in the return air section of the unit. The sensor ships with approximately 15' of extra wire for dropping down the return air duct (downflow only).
10. Cannot be fused.
11. Must be factory installed when using Through-the-Base Options.
12. ReliaTel Options Module is required when ordering the following accessories: Clogged Filter Switch, Fan Fail Switch, Discharge Air Sensing Kit, Frostat, Ventilation Override, Smoke Detector and Dehumidification.
13. Option cannot be ordered in conjunction with field installed economizer. Must be factory installed. The return air smoke detector may not fit up or work properly on the Voyager units when used in conjunction with 3rd party accessories (such as bolt on heat wheels, economizers, and power exhaust). Do not order the return air smoke detectors when using this type of accessory.
14. Unit mounted disconnect and circuit breakers are mutually exclusive of each other.
15. Through-the-base electrical option must be ordered with either unit mounted disconnect or circuit breaker. When adding heat, must order Trane Electric Heat.
16. Available on high efficiency, downflow units only.
17. All Factory Installed Options are Built-to-Order. Check order services for estimated production cycle.

Note: **Most Factory Installed Options (FIOPS) available for Downflow Air Discharge units only. Please verify with ordering system for availability.*

General Data

Table 1. General Data — 12½-15 Tons

	12½ Tons Downflow & Horizontal Units		15 Tons Downflow & Horizontal Units	
	TC*150D3,4,W,K	**YC*150D3,4,WL/H,K**	**TC*180B3,4,W,K**	**YC*180B3,4,WL/H,K**
Cooling Performance[i]				
Gross Cooling Capacity	150,000	150,000	182,000	182.000
EER (Downflow/Horizontal)[ii]	9.8	9.6	9.9	9.7
Nominal CFM / ARI Rated CFM	5,000/4,400	5,000/4,000	6,000/5,300	6,000/5,300
ARI Net Cooling Capacity	142,000	142,000	174,000	174,000
Integrated Part Load Value[iii]	10.5	10.3	10.2	10.0
System Power (kW)	14.49	14.79	17.57	17.94
Compressor				
Number/Type	2/Scrolls	2/Scrolls	2/Scrolls	2/Scrolls
Sound				
Outdoor Sound Rating (BELS)[iv]	9.2	9.2	9.2	9.2
Outdoor Coil				
Type	Hi-Performance	Hi-Performance	Hi-Performance	Hi-Performance
Tube Size (in.) OD	0.375	0.375	0.375	0.375
Face Area (sq. ft.)	24.18	24.18	27.12	27.12
Rows/FPI	2/16	2/16	3/16	3/16
Indoor Coil				
Type	Hi-Performance	Hi-Performance	Hi-Performance	Hi-Performance
Tube Size (in.)	0.375	0.375	0.375	0.375
Face Area (sq. ft.)	17.50	17.50	17.50	17.50
Rows/FPI	2/15	2/15	2/15	2/15
Refrigerant Control	Short Orifice	Short Orifice	Short Orifice	Short Orifice
Drain Connection Number/Size (in.)	1/1.00 NPT	1/1.00 NPT	1/1.00 NPT	1/1.00 NPT
Outdoor Fan				
Type	Propeller	Propeller	Propeller	Propeller
Number Used/Diameter (in.)	2/26	2/26	2/26	2/26
Drive Type/No. Speeds	Direct/1	Direct/1	Direct/1	Direct/1
CFM	10,600	10,600	10,200	10,200
Number Motors/HP	2/.50	2/.50	2/.50	2/.50
Motor RPM	1,100	1,100	1,100	1,100
Indoor Fan				
Type	FC Centrifugal	FC Centrifugal	FC Centrifugal	FC Centrifugal
Number Used/Diameter (in.)	1/15x15	1/15x15	1/15x15	1/15x15
Drive Type/Number Speeds	Belt/1	Belt/1	Belt/1	Belt/1
Number Motors	1	1	1	1
Motor HP (Standard/Oversized)[v]	3.0/5.0	3.0/5.0	3.0/5.0	3.0/5.0
Motor RPM (Standard/Oversized)	1,740/3,450	1,740/3,450	1,740/3,450	1,740/3,450
Motor Frame Size (Standard/ Oversized)	145T/145T	145T/145T	145T/145T	145T/145T
Filters				
Type Furnished[vi]	Throwaway	Throwaway	Throwaway	Throwaway
Number Size Recommended				
Downflow	(2)20x20x2,(4)20x25x2	(2)20x20x2,(4)20x25x2	(2)20x20x2,(4)20x25x2	(2)20x20x2,(4)20x25x2
Horizontal	(2)20x20x2,(4)20x25x2	(2)20x20x2,(4)20x25x2	(2)20x20x2,(4)20x25x2	(2)20x20x2,(4)20x25x2
Refrigerant Charge				
Pounds of R-22[vii]	9.3/9.4 Circuit	9.3/9.4 Circuit	17.5/9.5 Circuit	17.5/9.5 Circuit

Table 1. (continued) General Data — 12½-15 Tons

	12½ Tons Downflow & Horizontal Units		15 Tons Downflow & Horizontal Units	
Heating Performance[viii]				
(Gas/Electric Only)				
Heating Models	Low	High	Low	High
Heating Input (Btuh)	150,000	250,000	250,000	350,000
1st Stage (Btu)	100,000	175,000	175,000	250,000
Heating Output (Btuh)	122,000	203,000	203,000	284,000
1st Stage (Btu)	81,000	142,000	142,000	203,000
AFUE (%)[ix]				
Downflow/Horizontal	81.0	80.7/79.9	80.7/79.9	80.1/79.1
Steady State Efficiency%	81.0	81.0	81.0	81.0
No. Burners	1		1	
No. Stages	2		2	
Gas Supply Line Pressure (in w.c.)				
Natural or LP (minimum/maximum)	2.5/14.0		2.5/14.0	
Gas Connection Pipe Size (in.)	1/2		1/2	3/4

(i) Cooling Performance is rated at 95°F ambient, 80°F entering dry bulb, 67°F entering wet bulb. Gross capacity does not include the effect of fan motor heat. ARI capacity is net and includes the effect of fan motor heat. Units are suitable for operation to ±20% of nominal cfm. Certified in accordance with the Unitary Large Equipment Certification Program, which is based on ARI Standard 340/360-93.
(ii) EER is rated at ARI conditions and in accordance with ARI Standard 210/240 or 360.
(iii) Integrated Part Load Value is rated in accordance with ARI Standard 210/240 or 360. Units are rated at 80°F ambient, 80°F entering dry bulb, and 67°F entering wet bulb at ARI rated cfm.
(iv) Outdoor Sound Rating shown is tested in accordance with ARI Standard 270 or 370.
(v) For 380V/60Hz units, the oversized motor (Indoor Fan) is used as the standard motor. Refer to oversized motor data.
(vi) An optional 2 inch pleated filter is also available.
(vii) Refrigerant charge is an approximate value. For a more precise value, see unit nameplate and service instructions.
(viii) Heating Performance limit settings and rating data were established and approved under laboratory test conditions using American National Standards Institute standards. Ratings shown are for elevations up to 2000 feet. For elevations above 2000 feet, ratings should be reduced at the rate of 4% for each 1000 feet above sea level.
(ix) AFUE is rated in accordance with DOE test procedures.
*Indicates both downflow/horizontal units.

Table 2. General Data — 17½-20 Tons

	17½ Tons Downflow & Horizontal Units		20 Tons Downflow & Horizontal Units	
	TC*210C3,4,W,K	**YC*210C3,4,WL/H,K**	**TC*240B3,4,W,K**	**YC*240B3,4,WL/H,K**
Cooling Performance[i]				
Gross Cooling Capacity	210,000	210,000	242,000	242,000
EER (Downflow/Horizontal)[ii]	9.8	9.6	9.7	9.5
Nominal CFM / ARI Rated CFM	7,000/5,800	7,000/5,800	8,000/7,000	8,000/7,000
ARI Net Cooling Capacity	196,000	196,000	232,000	232,000
Integrated Part Load Value[iii]	10.0	9.8	10.0	9.8
System Power (kW)	20.0	20.41	23.91	24.42
Compressor				
Number/Type	2/Scrolls	2/Scrolls	2/Scrolls	2/Scrolls
Sound				
Outdoor Sound Rating (BELS)[iv]	9.4	9.4	9.4	9.4
Outdoor Coil				
Type	Hi-Performance	Hi-Performance	Hi-Performance	Hi-Performance
Tube Size (in.) OD	0.375	0.375	0.375	0.375
Face Area (sq. ft.)	27.12	27.12	35.30	35.30
Rows/FPI	3/16	3/16	3/16	3/16
Indoor Coil				
Type	Hi-Performance	Hi-Performance	Hi-Performance	Hi-Performance
Tube Size (in.)	0.375	0.375	0.375	0.375
Face Area (sq. ft.)	17.50	17.50	26.00	26.00
Rows/FPI	4/15	4/15	2/15	2/15
Refrigerant Control	Short Orifice	Short Orifice	Short Orifice	Short Orifice
Drain Connection Number/Size (in.)	1/1.00 NPT	1/1.00 NPT	1/1.00 NPT	1/1.00 NPT
Outdoor Fan				
Type	Propeller	Propeller	Propeller	Propeller
Number Used/Diameter (in.)	2/26	2/26	2/26	2/26
Drive Type/No. Speeds	Direct/1	Direct/1	Direct/1	Direct/1
CFM	13,400	13,400	14,600	14,600
Number Motors/HP	2/1.0	2/1.0	2/1.0	2/1.0
Motor RPM	1,125	1,125	1,125	1,125
Indoor Fan				
Type	FC Centrifugal	FC Centrifugal	FC Centrifugal	FC Centrifugal
Number Used/Diameter (in.)	1/15x15	1/15x15	1/18x18	1/18x18
Drive Type/Number Speeds	Belt/1	Belt/1	Belt/1	Belt/1
Number Motors	1	1	1	1
Motor HP (Standard/Oversized)[v]	5.0/7.5	5.0/7.5	5.0/7.5	5.0/7.5
Motor RPM (Standard/Oversized)	3,450/3,470	3,450/3,470	3,450/3,470	3,450/3,470
Motor Frame Size (Standard/ Oversized)	145T/184T	145T/184T	145T/184T	145T/184T
Filters				
Type Furnished[vi]	Throwaway	Throwaway	Throwaway	Throwaway
Number Size Recommended				
Downflow	(2)20x20x2,(4)20x25x2	(2)20x20x2,(4)20x25x2	(4)20x20x2,(4)20x25x2	(4)20x20x2,(4)20x25x2
Horizontal	(2)20x20x2,(4)20x25x2	(2)20x20x2,(4)20x25x2	(8)20x25x2	(8)20x25x2
Refrigerant Charge				
Pounds of R-22[vii]				
Downflow	21.0/14.3 Circuit	21.0/14.3 Circuit	18.9/21.0 Circuit	18.9/21.0 Circuit
Horizontal	21.5/14.5 Circuit	21.0/14.5 Circuit		

Table 2. (continued) General Data — 17½-20 Tons

	17½ Tons Downflow & Horizontal Units		20 Tons Downflow & Horizontal Units	
Heating Performance[viii]				
(Gas/Electric Only)				
Heating Models	Low	High	Low	High
Heating Input (Btuh)	250,000	350,000	250,000	400,000
1st Stage (Btu)	175,000	250,000	175,000	300,000
Heating Output (Btuh)	203,000	284,000	203,000	324,000
1st Stage (Btu)	142,000	203,000	142,000	243,000
AFUE (%)[ix]				
Downflow/Horizontal	80.7/79.9	80.1/79.1	80.2/81.0	79.8/79.7
Steady State Efficiency%	81.0	81.0	81.0	81.0
No. Burners	1		1	
No. Stages	2		2	
Gas Supply Line Pressure (in w.c.)				
Natural or LP (minimum/maximum)	2.5/14.0		2.5/14.0	
Gas Connection Pipe Size (in.)	1/2	3/4	1/2	3/4

(i) Cooling Performance is rated at 95°F ambient, 80°F entering dry bulb, 67°F entering wet bulb. Gross capacity does not include the effect of fan motor heat. ARI capacity is net and includes the effect of fan motor heat. Units are suitable for operation to ±20% of nominal cfm. Certified in accordance with the Unitary Large Equipment Certification Program, which is based on ARI Standard 340/360-93.
(ii) EER is rated at ARI conditions and in accordance with ARI Standard 210/240 or 360.
(iii) Integrated Part Load Value is rated in accordance with ARI Standard 210/240 or 360. Units are rated at 80°F ambient, 80°F entering dry bulb, and 67°F entering wet bulb at ARI rated cfm.
(iv) Outdoor Sound Rating shown is tested in accordance with ARI Standard 270 or 370.
(v) For 380V/60Hz units, the oversized motor (Indoor Fan) is used as the standard motor. Refer to oversized motor data.
(vi) An optional 2 inch pleated filter is also available.
(vii) Refrigerant charge is an approximate value. For a more precise value, see unit nameplate and service instructions.
(viii) Heating Performance limit settings and rating data were established and approved under laboratory test conditions using American National Standards Institute standards. Ratings shown are for elevations up to 2000 feet. For elevations above 2000 feet, ratings should be reduced at the rate of 4% for each 1000 feet above sea level.
(ix) AFUE is rated in accordance with DOE test procedures.
*Indicates both downflow/horizontal units.

Table 3. General Data — 25 Tons

	25 Tons Downflow & Horizontal Units
	T/YC*300B3,4,W(L,H[i]),K
Cooling Performance[ii]	
Gross Cooling Capacity	290,000
EER (Downflow/Horizontal)[iii]	9.7
Nominal CFM / ARI Rated CFM	10,000/8,750
ARI Net Cooling Capacity	272,000
Integrated Part Load Value[iv]	9.8
System Power (kW)	28.05
Compressor	
Number/Type	2/Scrolls
Sound	
Outdoor Sound Rating (BELS)[v]	9.4
Outdoor Coil	
Type	Hi-Performance
Tube Size (in.) OD	0.375
Face Area (sq. ft.)	36.43
Rows/FPI	2/16
Indoor Coil	
Type	Hi-Performance
Tube Size (in.)	0.375
Face Area (sq. ft.)	26.00
Rows/FPI	3/15
Refrigerant Control	Short Orifice
Drain Connection Number/Size (in.)	1/1.00 NPT
Outdoor Fan	
Type	Propeller
Number Used/Diameter (in.)	2/28
Drive Type/No. Speeds	Direct/1
CFM	16,700
Number Motors/HP	2/1.0
Motor RPM	1,125
Indoor Fan	
Type	FC Centrifugal
Number Used/Diameter (in.)	1/18x18
Drive Type/Number Speeds	Belt/1
Number Motors	1
Motor HP (Standard/Oversized)[vi]	7.5/N/A
Motor RPM (Standard/Oversized)	3,470/N/A
Motor Frame Size (Standard/Oversized)	184T/N/A
Filters	
Type Furnished[vii]	Throwaway
Number Size Recommended	
Downflow	(4)20x20x2,(4)20x25x2
Horizontal	(8)20x25x2
Refrigerant Charge	
Pounds of R-22[viii]	
Downflow	
Horizontal	17.0/Circuit

Table 3. (continued) General Data — 25 Tons

	25 Tons Downflow & Horizontal Units	
Heating Performance[ix]		
(Gas/Electric Only)		
Heating Models	Low	High
Heating Input (Btuh)	250,000	400,000
1st Stage (Btu)	175,000	300,000
Heating Output (Btuh)	203,000	324,000
1st Stage (Btu)	142,000	243,000
AFUE (%)[x]		
Downflow/Horizontal	80.2/81.0	79.8/79.7
Steady State Efficiency%	81.4/81.0	80.8/81.0
No. Burners	1	
No. Stages	2	
Gas Supply Line Pressure (in w.c.)		
Natural or LP (minimum/maximum)	2.5/14.0	
Gas Connection Pipe Size (in.)	1/2	3/4

(i) Applies to Y* models only.
(ii) Cooling Performance is rated at 95°F ambient, 80°F entering dry bulb, 67°F entering wet bulb. Gross capacity does not include the effect of fan motor heat. ARI capacity is net and includes the effect of fan motor heat. Units are suitable for operation to ±20% of nominal cfm. Certified in accordance with the Unitary Large Equipment Certification Program, which is based on ARI Standard 340/360-93.
(iii) EER is rated at ARI conditions and in accordance with ARI Standard 210/240 or 360.
(iv) Integrated Part Load Value is rated in accordance with ARI Standard 210/240 or 360. Units are rated at 80°F ambient, 80°F entering dry bulb, and 67°F entering wet bulb at ARI rated cfm.
(v) Outdoor Sound Rating shown is tested in accordance with ARI Standard 270 or 370.
(vi) For 380V/60Hz units, the oversized motor (Indoor Fan) is used as the standard motor. Refer to oversized motor data.
(vii) An optional 2 inch pleated filter is also available.
(viii) Refrigerant charge is an approximate value. For a more precise value, see unit nameplate and service instructions.
(ix) Heating Performance limit settings and rating data were established and approved under laboratory test conditions using American National Standards Institute standards. Ratings shown are for elevations up to 2000 feet. For elevations above 2000 feet, ratings should be reduced at the rate of 4% for each 1000 feet above sea level.
(x) AFUE is rated in accordance with DOE test procedures.
*Indicates both downflow/horizontal units.

Table 4. General Data — 12½-15 Tons

	12½ Tons Downflow & Horizontal Units	15 Tons Downflow & Horizontal Units
	T/YC*151C3,4,W[i]	T/YC*181C3,4,W[ii]
Cooling Performance[iii]		
Gross Cooling Capacity	154,000	189,000
EER[iv]	11.30	11.50
Nominal CFM / ARI Rated CFM	5,000/4,400	6,000/5,300
ARI Net Cooling Capacity	146,000	180,000
Integrated Part Load Value[v]	11.5	13.3
System Power (kW)	12.92	15.65
Compressor		
Number/Type	2/Scrolls	2/Scrolls
Sound		
Outdoor Sound Rating (BELS)[vi]	9.2	9.2
Outdoor Coil		
Type	Hi-Performance	Hi-Performance
Tube Size (in.) OD	0.375	0.375
Face Area (sq. ft.)	27.12	35.30
Rows/FPI	2/16	3/16
Indoor Coil		
Type	Hi-Performance	Hi-Performance
Tube Size (in.)	0.375	0.375
Face Area (sq. ft.)	17.50	26.00
Rows/FPI	3/15	3/15
Refrigerant Control	Short Orifice	Short Orifice
Drain Connection Number/Size (in.)	1/1.00 NPT	1/1.00 NPT
Outdoor Fan		
Type	Propeller	Propeller
Number Used/Diameter (in.)	2/26	2/26
Drive Type/No. Speeds	Direct/1	Direct/1
CFM	10,400	11,000
Number Motors/HP	2/.50	2/.50
Motor RPM	1,100	1,100
Indoor Fan		
Type	FC Centrifugal	FC Centrifugal
Number Used/Diameter (in.)	1/15x15	1/18x18
Drive Type/Number Speeds	Belt/1	Belt/1
Number Motors	1	1
Motor HP (Standard/Oversized)[vii]	3.0/5.0	3.0/5.0
Motor RPM (Standard/Oversized)	1,740/3,450	1,740/3,450
Motor Frame Size (Standard/Oversized)	145T/145T	145T/145T
Filters		
Type Furnished[viii]	Throwaway	Throwaway
Number Size Recommended		
Downflow	(2)20x20x2,(4)20x25x2	(4)20x20x2,(4)20x25x2
Horizontal	(2)20x20x2,(4)20x25x2	(8)20x25x2
Optional Hot Gas Reheat Coil		
Type	Hi-Performance	Hi-Performance
Tube Size (in.) OD	0.375	0.375
Face Area (sq. ft)	17.5	26
Rows/FPI	1/16	1/16
Refrigerant Charge Pounds of R-22[ix]		
Standard	15.0/13.8	25.0/13.0
Optional Hot Gas Reheat Coil	15.3/14.3	27.8/11.4

Table 4. (continued) General Data — 12½-15 Tons

	12½ Tons Downflow & Horizontal Units		15 Tons Downflow & Horizontal Units	
Heating Performance[x]				
(Gas/Electric Only)				
Heating Models	Low	High	Low	High
Heating Input (Btuh)	150,000	250,000	250,000	350,000
1st Stage (Btu)	100,000	175,000	175,000	250,000
Heating Output (Btuh)	122,000	203,000	203,000	284,000
1st Stage (Btu)	81,000	142,000	142,000	203,000
AFUE%[xi]				
Downflow/Horizontal	81.0/81.0	80.7/79.9	80.7/79.9	80.1/79.1
Steady State Efficiency%	81.0	81.0	81.0	81.0
No. Burners	1	1	1	1
No. Stages	2	2	2	2
Gas Supply Line Pressure (in w.c.)				
Natural or LP (minimum/maximum)	2.5/14.0		2.5/14.0	
Gas Connection Pipe Size (in.)	1/2	1/2	1/2	3/4

(i) TXV/Face-Split Option (Downflow Only) YCD151C3,4,W (EER):11.3; (System Power kW): 12.92; (Refrigerant Control): Expansion Valve; (Refrigerant Charge): 13.4/12.0.
(ii) TXV/Face-Split Option (Downflow Only) YCD181C3,4,W (EER):11.4; (System Power kW): 15.79; (Refrigerant Control): Expansion Valve; (Refrigerant Charge): 26.0/12.0.
(iii) Cooling Performance is rated at 95°F ambient, 80°F entering dry bulb, 67°F entering wet bulb. Gross capacity does not include the effect of fan motor heat. ARI capacity is net and includes the effect of fan motor heat. Units are suitable for operation to ±20% of nominal cfm. Certified in accordance with the Unitary Large Equipment Certification Program, which is based on ARI Standard 340/360-93.
(iv) EER is rated at ARI conditions and in accordance with ARI Standard 210/240 or 360.
(v) Integrated Part Load Value is rated in accordance with ARI Standard 210/240 or 360. Units are rated at 80°F ambient, 80°F entering dry bulb, and 67°F entering wet bulb at ARI rated cfm.
(vi) Outdoor Sound Rating shown is tested in accordance with ARI Standard 270 or 370.
(vii) For 380V/60Hz units, the oversized motor (Indoor Fan) is used as the standard motor. Refer to oversized motor data.
(viii) An optional 2 inch pleated filter is also available.
(ix) Refrigerant charge is an approximate value. For a more precise value, see unit nameplate and service instructions.
(x) Heating Performance limit settings and rating data were established and approved under laboratory test conditions using American National Standards Institute standards. Ratings shown are for elevations up to 2000 feet. For elevations above 2000 feet, ratings should be reduced at the rate of 4% for each 1000 feet above sea level.
(xi) AFUE is rated in accordance with DOE test procedures.

Table 5. General Data — 17½, 20, 25 Tons

	17½ Tons Downflow & Horizontal Units	20 Tons Downflow & Horizontal Units	25 Tons Downflow & Horizontal Units
	T/YC*211C3,4,W	**T/YC*241C3,4,W[i]**	**T/YC*301C3,4,W**
Cooling Performance[ii]			
Gross Cooling Capacity	220,000	268,000	300,000
EER[iii]	11.0	10.6	10.4
Nominal CFM / ARI Rated CFM	7,000/6,200	8,000/7,000	10,000/8,750
ARI Net Cooling Capacity	208,000	250,000	278,000
Integrated Part Load Value[iv]	12.0	11.2	11.0
System Power (kW)	18.91	23.58	26.73
Compressor			
Number/Type	2/Scrolls	2/Scrolls	2/Scrolls
Sound			
Outdoor Sound Rating (BELS)[v]	9.4	9.4	9.4
Outdoor Coil			
Type	Hi-Performance	Hi-Performance	Hi-Performance
Tube Size (in.) OD	0.375	0.375	0.375
Face Area (sq. ft.)	35.30	35.30	35.30
Rows/FPI	3/16	3/16	3/16
Indoor Coil			
Type	Hi-Performance	Hi-Performance	Hi-Performance
Tube Size (in.)	0.375	0.375	0.375
Face Area (sq. ft.)	26.00	26.00	26.00
Rows/FPI	4/15	4[vi]/15	4/15
Refrigerant Control	Short Orifice	Short Orifice	Short Orifice
Drain Connection Number/Size (in.)	1/1.0 NPT	1/1.0 NPT	1/1.0 NPT
Outdoor Fan			
Type	Propeller	Propeller	Propeller
Number Used/Diameter (in.)	2/26	2/26	2/26
Drive Type/No. Speeds	Direct/1	Direct/1	Direct/1
CFM	12,800	13,700	13,700
Number Motors/HP	2/1.0	2/1.0	2/1.0
Motor RPM	1,125	1,125	1,125
Indoor Fan			
Type	FC Centrifugal	FC Centrifugal	FC Centrifugal
Number Used/Diameter (in.)	1/18x18	1/18x18	1/18x18
Drive Type/Number Speeds	Belt/1	Belt/1	Belt/1
Number Motors	1	1	1
Motor HP (Standard/Oversized)	5.0/7.5	5.0/7.5	7.5
Motor RPM (Standard/Oversized)	3,450/3,470	3,450/3,470	3,470
Motor Frame Size (Standard/Oversized)	145T/184T	145T/184T	184T
Filters			
Type Furnished[vii]	Throwaway	Throwaway	Throwaway
Number Size Recommended			
Downflow	(4)20x20x2,(4)20x25x2	(4)20x20x2,(4)20x25x2	(4)20x20x2,(4)20x25x2
Horizontal	(8)20x25x2	(8)20x25x2	(8)20x25x2
Optional Hot Gas Reheat Coil			
Type	—	Hi-Performance	—
Tube Size (in.) OD	—	0.375	—
Face Area (sq. ft)	—	26	—
Rows/FPI	—	1/16	—
Refrigerant Charge Pounds of R-22[viii]			
Standard	25.7/12.5	21.8/21.8	24.5/24.5
Optional Hot Gas Reheat Coil	—	21.3/21.0	—

Table 5. (continued) General Data — 17½, 20, 25 Tons

	17½ Tons Downflow & Horizontal Units		20 Tons Downflow & Horizontal Units		25 Tons Downflow & Horizontal Units	
Heating Performance(ix)						
(Gas/Electric Only)						
Heating Models	Low	High	Low	High	Low	High
Heating Input (Btuh)	250,000	350,000	250,000	400,000	250,000	400,000
1st Stage (Btu)	175,000	250,000	175,000	300,000	175,000	300,000
Heating Output (Btuh)	203,000	284,000	203,000	324,000	203,000	324.000
1st Stage (Btu)	142,000	203,000	142,000	243,000	142,000	243,000
AFUE%(x)						
Downflow/Horizontal	80.2/81.0	79.3/79.7	80.2/81.0	79.8/79.7	80.2/81.0	79.8/79.7
Steady State Efficiency%	81.0	81.0	81.0	81.0	81.0	81.0
No. Burners	1	1	1	1	1	1
No. Stages	2	2	2	2	2	2
Gas Supply Line Pressure (in w.c.)						
Natural or LP (minimum/maximum)	2.5/14.0		2.5/14.0		2.5/14.0	
Gas Connection Pipe Size (in.)	1/2	3/4	1/2	3/4	1/2	3/4

(i) TXV/Face-Split Option (Downflow Only) YCD241C3,4,W (Gross Cooling Capacity):259,000; (ARI Net Cooling Capacity): 244,000; (System Power kW): 23.02; (Refrigerant Control): Expansion Valve; (Refrigerant Charge): 21.5/22.2
(ii) Cooling Performance is rated at 95°F ambient, 80°F entering dry bulb, 67°F entering wet bulb. Gross capacity does not include the effect of fan motor heat. ARI capacity is net and includes the effect of fan motor heat. Units are suitable for operation to ±20% of nominal cfm. Certified in accordance with the Unitary Large Equipment Certification Program, which is based on ARI Standard 340/360-93.
(iii) EER is rated at ARI conditions and in accordance with ARI Standard 210/240 or 360.
(iv) Integrated Part Load Value is rated in accordance with ARI Standard 210/240 or 360. Units are rated at 80°F ambient, 80°F entering dry bulb, and 67°F entering wet bulb at ARI rated cfm.
(v) Outdoor Sound Rating shown is tested in accordance with ARI Standard 270 or 370.
(vi) On Hot Gas Reheat units, Indoor Coil = 3 rows.
(vii) An optional 2 inch pleated filter is also available.
(viii) Refrigerant charge is an approximate value. For a more precise value, see unit nameplate and service instructions.
(ix) Heating Performance limit settings and rating data were established and approved under laboratory test conditions using American National Standards Institute standards. Ratings shown are for elevations up to 2000 feet. For elevations above 2000 feet, ratings should be reduced at the rate of 4% for each 1000 feet above sea level.
(x) AFUE is rated in accordance with DOE test procedures.
*Indicates both downflow/horizontal units.

Performance Data

Table 6. Gross Cooling Capacities 12½ Tons Three Phase Standard Efficiency T/YC*150D3,4,W,K

		Ambient Temperature																							
		85						95						105						115					
Air	Ent	Entering Wet Bulb																							
Flow	DB	61		67		73		61		67		73		61		67		73		61		67		73	
CFM	(F)	MBH	SHC	MBH	SHC	MBH	SHC	MBH	SHC	MBH	SHC	MBH	SHC	MBH	SHC	MBH	SHC	MBH	SHC	MBH	SHC	MBH	SHC	MBH	SHC
4500	75	135.0	108.0	153.0	86.0	162.0	59.3	126.0	103.0	146.0	82.0	158.0	56.7	116.0	98.2	138.0	77.7	152.0	53.8	106.0	93.1	127.0	80.0	145.0	50.5
	80	136.0	128.0	154.0	105.0	163.0	79.5	127.0	123.0	147.0	101.0	159.0	76.5	117.0	117.0	138.0	97.0	153.0	73.2	110.0	110.0	128.0	92.2	145.0	69.6
	85	142.0	142.0	154.0	123.0	164.0	95.9	135.0	135.0	147.0	120.0	159.0	94.2	127.0	127.0	138.0	116.0	153.0	91.7	120.0	120.0	128.0	111.0	146.0	88.5
	90	150.0	150.0	155.0	142.0	166.0	112.0	144.0	144.0	148.0	139.0	161.0	111.0	137.0	137.0	139.0	136.0	154.0	109.0	130.0	130.0	130.0	130.0	146.0	107.0
5000	75	139.0	114.0	155.0	89.8	163.0	60.4	129.0	109.0	149.0	85.4	159.0	57.9	120.0	104.0	141.0	89.5	154.0	55.0	109.0	98.9	131.0	85.1	147.0	51.6
	80	140.0	136.0	156.0	109.0	164.0	81.3	130.0	130.0	149.0	106.0	160.0	79.1	123.0	123.0	141.0	102.0	155.0	75.8	115.0	115.0	131.0	97.5	147.0	72.2
	85	147.0	147.0	157.0	129.0	166.0	98.2	141.0	141.0	150.0	126.0	161.0	96.8	133.0	133.0	141.0	123.0	155.0	94.8	125.0	125.0	131.0	118.0	148.0	91.9
	90	155.0	155.0	158.0	148.0	167.0	115.0	149.0	149.0	151.0	147.0	163.0	115.0	143.0	143.0	143.0	143.0	157.0	114.0	135.0	135.0	135.0	135.0	149.0	111.0
5500	75	142.0	120.0	157.0	91.3	164.0	61.5	132.0	115.0	151.0	88.8	160.0	59.0	122.0	110.0	143.0	84.2	155.0	56.1	112.0	104.0	133.0	89.9	148.0	52.9
	80	143.0	143.0	158.0	112.0	165.0	82.0	135.0	135.0	152.0	110.0	161.0	80.4	127.0	127.0	143.0	107.0	156.0	78.3	119.0	119.0	134.0	102.0	149.0	74.7
	85	152.0	152.0	159.0	133.0	167.0	99.9	145.0	145.0	152.0	132.0	163.0	99.1	138.0	138.0	144.0	129.0	157.0	97.4	130.0	130.0	134.0	125.0	150.0	95.0
	90	159.0	159.0	160.0	154.0	169.0	118.0	153.0	153.0	153.0	153.0	164.0	118.0	147.0	147.0	147.0	147.0	158.0	117.0	140.0	140.0	140.0	140.0	151.0	116.0
6000	75	145.0	125.0	158.0	93.3	165.0	62.5	135.0	120.0	153.0	91.2	161.0	60.1	125.0	115.0	145.0	87.3	156.0	57.2	115.0	110.0	136.0	82.8	149.0	54.0
	80	147.0	147.0	159.0	115.0	166.0	82.9	140.0	140.0	153.0	114.0	162.0	81.7	132.0	132.0	145.0	111.0	157.0	79.3	123.0	123.0	136.0	107.0	150.0	76.5
	85	155.0	155.0	161.0	137.0	168.0	101.1	149.0	149.0	154.0	137.0	164.0	101.0	142.0	142.0	146.0	135.0	158.0	99.8	134.0	134.0	137.0	131.0	151.0	97.8
	90	161.0	161.0	162.0	159.0	170.0	120.0	156.0	156.0	156.0	156.0	166.0	121.0	150.0	150.0	150.0	150.0	160.0	121.0	143.0	143.0	143.0	143.0	152.0	119.0

Notes:
1. All capacities shown are gross and have not considered indoor fan heat. To obtain **NET** cooling capacity subtract indoor fan heat. For indoor fan heat formula, refer to appropriate airflow table notes.
2. MBH = Total Gross Capacity
3. SHC = Sensible Heat Capacity

*Indicates both downflow and horizontal units.

Table 7. Gross Cooling Capacities 15 Tons Three Phase Standard Efficiency T/YC*180B3,4,W,K

		Ambient Temperature																							
		85						95						105						115					
Air	Ent	Entering Wet Bulb																							
Flow	DB	61		67		73		61		67		73		61		67		73		61		67		73	
CFM	(F)	MBH	SHC	MBH	SHC	MBH	SHC	MBH	SHC	MBH	SHC	MBH	SHC	MBH	SHC	MBH	SHC	MBH	SHC	MBH	SHC	MBH	SHC	MBH	SHC
5400	75	168.0	133.0	188.0	106.0	198.0	73.0	157.0	128.0	181.0	101.0	194.0	70.4	147.0	122.0	172.0	97.0	187.0	67.3	137.0	117.0	162.0	92.1	179.0	63.2
	80	168.0	156.0	188.0	128.0	199.0	97.3	155.0	155.0	181.0	125.0	195.0	94.3	149.0	143.0	172.0	120.0	188.0	90.8	140.0	137.0	162.0	115.0	179.0	86.7
	85	174.0	174.0	189.0	150.0	200.0	117.0	166.0	166.0	182.0	147.0	196.0	115.0	158.0	158.0	172.0	143.0	189.0	113.0	150.0	150.0	162.0	138.0	180.0	110.0
	90	184.0	184.0	190.0	172.0	202.0	136.0	177.0	177.0	183.0	170.0	197.0	135.0	170.0	170.0	170.0	170.0	190.0	133.0	162.0	162.0	165.0	157.0	181.0	131.0
6000	75	172.0	140.0	190.0	110.0	199.0	74.3	161.0	134.0	184.0	106.0	195.0	71.7	151.0	129.0	175.0	101.0	189.0	68.7	140.0	124.0	165.0	96.1	181.0	64.9
	80	169.0	169.0	191.0	133.0	200.0	99.4	164.0	157.0	184.0	130.0	196.0	97.2	155.0	151.0	176.0	126.0	190.0	93.8	145.0	145.0	165.0	121.0	182.0	89.9
	85	181.0	181.0	192.0	156.0	202.0	119.0	173.0	173.0	185.0	154.0	198.0	118.0	165.0	165.0	176.0	151.0	191.0	116.0	157.0	157.0	166.0	146.0	183.0	113.0
	90	189.0	189.0	193.0	179.0	204.0	140.0	183.0	183.0	183.0	183.0	199.0	139.0	176.0	176.0	178.0	171.0	193.0	138.0	168.0	168.0	170.0	166.0	184.0	136.0
6600	75	176.0	147.0	192.0	112.0	200.0	75.5	165.0	141.0	186.0	110.0	196.0	73.0	154.0	136.0	178.0	105.0	190.0	69.8	144.0	130.0	168.0	99.8	182.0	66.1
	80	178.0	171.0	193.0	136.0	201.0	101.0	169.0	165.0	187.0	135.0	197.0	98.8	160.0	159.0	178.0	131.0	191.0	96.1	150.0	150.0	168.0	127.0	183.0	92.6
	85	185.0	185.0	194.0	161.0	203.0	122.0	179.0	179.0	188.0	160.0	199.0	121.0	171.0	171.0	179.0	158.0	193.0	119.0	163.0	163.0	169.0	153.0	185.0	116.0
	90	193.0	193.0	193.0	193.0	205.0	143.0	188.0	188.0	188.0	188.0	201.0	143.0	181.0	181.0	182.0	178.0	195.0	142.0	173.0	173.0	174.0	174.0	186.0	140.0
7200	75	179.0	152.0	194.0	114.0	201.0	76.7	168.0	147.0	188.0	112.0	197.0	74.2	158.0	142.0	180.0	109.0	191.0	71.0	142.0	142.0	170.0	103.0	183.0	67.2
	80	182.0	177.0	195.0	140.0	202.0	103.0	173.0	172.0	189.0	139.0	198.0	100.0	164.0	164.0	181.0	136.0	192.0	97.6	155.0	155.0	171.0	132.0	184.0	94.4
	85	189.0	189.0	196.0	166.0	204.0	125.0	183.0	183.0	190.0	166.0	200.0	123.0	176.0	176.0	182.0	164.0	194.0	121.0	167.0	167.0	167.0	167.0	186.0	119.0
	90	197.0	197.0	197.0	197.0	206.0	146.0	192.0	192.0	193.0	187.0	202.0	146.0	185.0	185.0	186.0	184.0	196.0	146.0	177.0	177.0	177.0	177.0	188.0	144.0

Notes:
1. All capacities shown are gross and have not considered indoor fan heat. To obtain **NET** cooling capacity subtract indoor fan heat. For indoor fan heat formula, refer to appropriate airflow table notes.
2. MBH = Total Gross Capacity
3. SHC = Sensible Heat Capacity

*Indicates both downflow and horizontal units.

Table 8. Gross Cooling Capacities 17½ Tons Three Phase Standard Efficiency T/YC*210C3,4,W,K

		Ambient Temperature																							
		85						95						105						115					
Air	Ent	Entering Wet Bulb																							
Flow	DB	61		67		73		61		67		73		61		67		73		61		67		73	
CFM	(F)	MBH	SHC	MBH	SHC	MBH	SHC	MBH	SHC	MBH	SHC	MBH	SHC	MBH	SHC	MBH	SHC	MBH	SHC	MBH	SHC	MBH	SHC	MBH	SHC
6300	75	195.0	171.0	213.0	127.0	224.0	83.3	182.0	164.0	206.0	124.0	219.0	80.1	169.0	158.0	195.0	119.0	213.0	76.1	155.0	151.0	181.0	113.0	204.0	71.8
	80	200.0	200.0	214.0	157.0	226.0	114.0	191.0	191.0	207.0	156.0	221.0	112.0	180.0	180.0	196.0	153.0	214.0	110.0	168.0	168.0	183.0	147.0	205.0	106.0
	85	211.0	211.0	217.0	188.0	229.0	140.0	204.0	204.0	209.0	188.0	223.0	139.0	195.0	195.0	199.0	186.0	216.0	139.0	184.0	184.0	187.0	182.0	206.0	137.0
	90	219.0	219.0	220.0	217.0	230.0	164.0	214.0	214.0	214.0	214.0	225.0	167.0	207.0	207.0	207.0	207.0	218.0	169.0	198.0	198.0	198.0	198.0	208.0	168.0
7000	75	199.0	181.0	215.0	131.0	225.0	84.7	187.0	176.0	208.0	129.0	221.0	81.4	174.0	169.0	198.0	125.0	215.0	77.7	160.0	160.0	185.0	119.0	206.0	73.4
	80	206.0	206.0	217.0	164.0	228.0	116.0	198.0	198.0	210.0	164.0	222.0	114.0	188.0	188.0	200.0	162.0	216.0	113.0	176.0	176.0	187.0	157.0	207.0	110.0
	85	216.0	216.0	220.0	197.0	230.0	144.0	210.0	210.0	213.0	198.0	225.0	144.0	202.0	202.0	204.0	198.0	218.0	145.0	192.0	192.0	192.0	192.0	209.0	144.0
	90	224.0	224.0	224.0	224.0	233.0	172.0	219.0	219.0	219.0	219.0	227.0	173.0	212.0	212.0	212.0	212.0	221.0	177.0	204.0	204.0	204.0	204.0	211.0	177.0
7700	75	203.0	191.0	217.0	135.0	226.0	86.1	192.0	187.0	211.0	138.0	222.0	82.9	178.0	178.0	201.0	131.0	216.0	79.2	165.0	165.0	188.0	126.0	208.0	75.0
	80	211.0	211.0	219.0	169.0	229.0	118.0	204.0	204.0	212.0	171.0	224.0	117.0	194.0	194.0	203.0	170.0	218.0	116.0	183.0	183.0	191.0	167.0	209.0	114.0
	85	220.0	220.0	222.0	203.0	232.0	147.0	214.0	214.0	216.0	207.0	226.0	148.0	207.0	207.0	207.0	207.0	220.0	150.0	197.0	197.0	197.0	197.0	211.0	150.0
	90	226.0	226.0	226.0	226.0	235.0	176.0	223.0	223.0	222.0	222.0	229.0	179.0	216.0	216.0	216.0	216.0	223.0	184.0	208.0	208.0	208.0	208.0	214.0	186.0
8400	75	206.0	199.0	218.0	138.0	227.0	87.8	195.0	195.0	212.0	143.0	223.0	84.3	183.0	183.0	203.0	136.0	217.0	80.6	171.0	171.0	190.0	132.0	209.0	76.5
	80	214.0	214.0	221.0	174.0	230.0	120.0	208.0	208.0	214.0	178.0	226.0	120.0	199.0	199.0	205.0	178.0	219.0	119.0	188.0	188.0	194.0	176.0	211.0	117.0
	85	222.0	222.0	224.0	210.0	233.0	150.0	217.0	217.0	218.0	215.0	228.0	151.0	211.0	211.0	211.0	211.0	222.0	155.0	202.0	202.0	202.0	202.0	213.0	156.0
	90	229.0	229.0	229.0	229.0	236.0	181.0	225.0	225.0	225.0	225.0	231.0	184.0	220.0	220.0	219.0	219.0	225.0	190.0	212.0	212.0	212.0	212.0	216.0	193.0

Notes:
1. All capacities shown are gross and have not considered indoor fan heat. To obtain **NET** cooling capacity subtract indoor fan heat. For indoor fan heat formula, refer to appropriate airflow table notes.
2. MBH = Total Gross Capacity
3. SHC = Sensible Heat Capacity

*Indicates both downflow and horizontal units.

Table 9. Gross Cooling Capacities 20 Tons Three Phase Standard Efficiency T/YC*240B3,4,W,K

		Ambient Temperature																							
		85						95						105						115					
Air	Ent	Entering Wet Bulb																							
Flow	DB	61		67		73		61		67		73		61		67		73		61		67		73	
CFM	(F)	MBH	SHC	MBH	SHC	MBH	SHC	MBH	SHC	MBH	SHC	MBH	SHC	MBH	SHC	MBH	SHC	MBH	SHC	MBH	SHC	MBH	SHC	MBH	SHC
7200	75	223.0	180.0	251.0	143.0	265.0	97.7	209.0	173.0	242.0	137.0	260.0	94.3	195.0	165.0	228.0	130.0	252.0	90.3	180.0	158.0	212.0	135.0	241.0	85.5
	80	226.0	214.0	252.0	173.0	267.0	131.0	208.0	208.0	242.0	169.0	261.0	127.0	197.0	197.0	228.0	162.0	253.0	122.0	186.0	186.0	213.0	155.0	242.0	117.0
	85	235.0	235.0	253.0	204.0	268.0	158.0	224.0	224.0	242.0	200.0	262.0	156.0	213.0	213.0	229.0	194.0	253.0	153.0	201.0	201.0	214.0	188.0	242.0	149.0
	90	248.0	248.0	255.0	234.0	271.0	185.0	239.0	239.0	245.0	232.0	264.0	185.0	228.0	228.0	228.0	228.0	255.0	183.0	217.0	217.0	217.0	217.0	243.0	179.0
8000	75	229.0	190.0	255.0	148.0	267.0	99.4	215.0	183.0	246.0	142.0	262.0	96.1	200.0	175.0	233.0	136.0	254.0	92.2	185.0	168.0	218.0	129.0	244.0	87.1
	80	228.0	228.0	256.0	180.0	268.0	134.0	217.0	217.0	246.0	176.0	264.0	131.0	205.0	205.0	233.0	171.0	255.0	127.0	193.0	193.0	218.0	164.0	245.0	121.0
	85	243.0	243.0	257.0	212.0	271.0	162.0	233.0	233.0	247.0	210.0	265.0	161.0	222.0	222.0	234.0	206.0	257.0	158.0	210.0	210.0	220.0	199.0	245.0	155.0
	90	255.0	255.0	259.0	245.0	273.0	190.0	247.0	247.0	247.0	247.0	267.0	191.0	237.0	237.0	237.0	237.0	258.0	190.0	226.0	226.0	226.0	226.0	247.0	187.0
8800	75	234.0	199.0	257.0	151.0	268.0	101.0	220.0	192.0	249.0	147.0	263.0	97.9	205.0	184.0	237.0	141.0	256.0	93.7	190.0	177.0	222.0	134.0	246.0	88.6
	80	236.0	236.0	259.0	185.0	270.0	136.0	224.0	224.0	249.0	183.0	265.0	134.0	212.0	212.0	237.0	178.0	257.0	130.0	200.0	200.0	222.0	172.0	247.0	126.0
	85	250.0	250.0	260.0	220.0	273.0	165.0	240.0	240.0	251.0	219.0	267.0	165.0	229.0	229.0	239.0	216.0	259.0	163.0	217.0	217.0	225.0	210.0	248.0	160.0
	90	260.0	260.0	263.0	254.0	275.0	194.0	253.0	253.0	253.0	253.0	270.0	196.0	244.0	244.0	244.0	244.0	261.0	196.0	233.0	233.0	233.0	233.0	250.0	194.0
9600	75	238.0	208.0	259.0	154.0	269.0	103.0	224.0	201.0	251.0	151.0	265.0	99.6	209.0	193.0	240.0	146.0	257.0	95.1	194.0	186.0	225.0	139.0	248.0	89.2
	80	242.0	242.0	261.0	190.0	271.0	137.0	231.0	231.0	252.0	189.0	266.0	136.0	219.0	219.0	240.0	185.0	259.0	133.0	206.0	206.0	226.0	180.0	249.0	129.0
	85	254.0	254.0	263.0	227.0	274.0	167.0	246.0	246.0	254.0	227.0	269.0	168.0	236.0	236.0	243.0	225.0	261.0	167.0	224.0	224.0	229.0	220.0	251.0	165.0
	90	264.0	264.0	264.0	264.0	277.0	198.0	258.0	258.0	258.0	258.0	272.0	201.0	249.0	249.0	249.0	249.0	263.0	202.0	239.0	239.0	239.0	239.0	252.0	201.0

Notes:
1. All capacities shown are gross and have not considered indoor fan heat. To obtain **NET** cooling capacity subtract indoor fan heat. For indoor fan heat formula, refer to appropriate airflow table notes.
2. MBH = Total Gross Capacity
3. SHC = Sensible Heat Capacity

*Indicates both downflow and horizontal units.

Table 10. Gross Cooling Capacities 25 Tons Three Phase Standard Efficiency T/YC*300B3,4,W,K

		Ambient Temperature																							
		85						95						105						115					
Air	Ent	Entering Wet Bulb																							
Flow	DB	61		67		73		61		67		73		61		67		73		61		67		73	
CFM	(F)	MBH	SHC	MBH	SHC	MBH	SHC	MBH	SHC	MBH	SHC	MBH	SHC	MBH	SHC	MBH	SHC	MBH	SHC	MBH	SHC	MBH	SHC	MBH	SHC
9000	75	266	224	299	174	319	118	247	215	285	167	309	113	228	205	266	172	297	108	209	196	244	163	280	99.9
	80	270	268	300	215	321	161	252	252	285	209	311	155	237	237	266	200	297	149	221	221	244	190	280	142
	85	286	286	301	255	323	196	272	272	286	250	312	194	256	256	267	242	298	189	240	240	246	233	281	183
	90	301	301	304	295	326	232	289	289	289	289	314	231	275	275	275	275	300	229	259	259	259	259	282	224
10000	75	272	237	303	180	322	120	253	227	290	174	312	115	234	218	271	165	300	109	214	208	249	156	284	102
	80	277	277	304	223	324	171	262	262	290	219	314	161	246	246	271	211	301	155	229	229	249	201	284	147
	85	294	294	306	266	327	208	282	282	291	263	316	200	266	266	273	257	302	197	249	249	253	248	285	192
	90	308	308	310	309	329	239	297	297	297	297	318	240	284	284	284	284	304	239	268	268	268	268	286	235
10500	75	275	243	305	183	323	122	256	233	291	177	314	117	236	223	273	188	301	111	216	214	251	178	285	103
	80	282	282	306	227	325	174	267	267	292	223	315	162	250	250	273	216	302	157	233	233	251	206	286	150
	85	298	298	308	272	328	216	286	286	294	270	317	203	270	270	276	264	304	200	253	253	256	255	286	196
	90	312	312	311	311	330	256	301	301	301	301	320	244	288	288	288	288	306	244	273	273	272	272	288	241
11000	75	278	248	306	185	324	123	258	239	293	181	315	118	239	229	275	172	302	113	217	217	253	184	286	104
	80	286	286	308	231	325	160	271	271	294	228	316	163	254	254	276	221	304	160	237	237	253	212	287	153
	85	301	301	310	277	327	224	289	289	296	276	319	205	274	274	278	271	305	204	257	257	257	257	288	200
	90	314	314	314	314	330	266	304	304	304	304	321	248	291	291	291	291	307	249	276	276	276	276	289	246

Notes:

1. All capacities shown are gross and have not considered indoor fan heat. To obtain **NET** cooling capacity subtract indoor fan heat. For indoor fan heat formula, refer to appropriate airflow table notes.
2. MBH = Total Gross Capacity
3. SHC = Sensible Heat Capacity

*Indicates both downflow and horizontal units.

Table 11. Gross Cooling Capacities 12½ Tons Three Phase Standard Refrigeration System High Efficiency T/YC*151C3,4,W

		Ambient Temperature																							
		85						95						105						115					
Air	Ent	Entering Wet Bulb																							
Flow	DB	61		67		73		61		67		73		61		67		73		61		67		73	
CFM	(F)	MBH	SHC	MBH	SHC	MBH	SHC	MBH	SHC	MBH	SHC	MBH	SHC	MBH	SHC	MBH	SHC	MBH	SHC	MBH	SHC	MBH	SHC	MBH	SHC
4500	75	137.0	116.0	157.0	90.2	166.0	60.8	127.0	110.0	151.0	87.1	163.0	58.5	116.0	105.0	140.0	82.3	158.0	55.8	106.0	99.7	128.0	80.6	152.0	52.8
	80	140.0	139.0	158.0	111.0	167.0	82.9	130.0	130.0	151.0	109.0	164.0	80.8	122.0	122.0	141.0	104.0	159.0	77.8	114.0	114.0	128.0	98.5	152.0	74.6
	85	149.0	149.0	158.0	132.0	169.0	100.0	142.0	142.0	151.0	131.0	165.0	99.4	133.0	133.0	141.0	126.0	159.0	98.2	125.0	125.0	130.0	121.0	152.0	96.0
	90	158.0	158.0	160.0	153.0	170.0	118.0	152.0	152.0	154.0	152.0	166.0	118.0	145.0	145.0	145.0	145.0	160.0	118.0	137.0	137.0	137.0	137.0	153.0	117.0
5000	75	141.0	123.0	159.0	93.4	167.0	61.6	131.0	117.0	154.0	90.9	164.0	59.4	120.0	112.0	144.0	86.6	159.0	56.8	109.0	107.0	132.0	81.0	153.0	53.7
	80	145.0	145.0	160.0	116.0	168.0	84.1	136.0	136.0	154.0	114.0	165.0	82.4	128.0	128.0	144.0	110.0	161.0	80.9	119.0	119.0	132.0	105.0	154.0	77.5
	85	155.0	155.0	161.0	138.0	170.0	103.0	148.0	148.0	155.0	138.0	166.0	102.0	140.0	140.0	145.0	135.0	161.0	102.0	131.0	131.0	134.0	129.0	154.0	100.0
	90	162.0	162.0	163.0	160.0	172.0	121.0	157.0	157.0	157.0	157.0	168.0	122.0	151.0	151.0	151.0	151.0	163.0	123.0	143.0	143.0	143.0	143.0	155.0	122.0
5500	75	145.0	129.0	161.0	95.8	168.0	62.6	134.0	124.0	156.0	94.4	165.0	60.4	123.0	119.0	147.0	90.4	161.0	57.8	112.0	112.0	135.0	85.1	154.0	54.6
	80	150.0	150.0	162.0	119.0	169.0	85.2	142.0	142.0	156.0	119.0	167.0	84.0	133.0	133.0	147.0	116.0	162.0	82.4	124.0	124.0	135.0	111.0	155.0	80.1
	85	158.0	158.0	163.0	143.0	172.0	104.0	153.0	153.0	157.0	144.0	168.0	104.0	146.0	146.0	149.0	143.0	163.0	105.0	137.0	137.0	137.0	137.0	156.0	104.0
	90	165.0	165.0	165.0	165.0	173.0	123.0	161.0	161.0	161.0	161.0	170.0	126.0	156.0	156.0	156.0	156.0	164.0	127.0	149.0	149.0	149.0	149.0	157.0	127.0
6000	75	148.0	136.0	162.0	97.9	168.0	63.5	137.0	131.0	157.0	97.1	166.0	61.4	126.0	125.0	150.0	94.3	162.0	58.9	116.0	116.0	138.0	89.0	155.0	55.6
	80	154.0	154.0	163.0	123.0	170.0	86.2	147.0	147.0	158.0	124.0	168.0	85.8	138.0	138.0	150.0	122.0	162.0	83.3	128.0	128.0	138.0	117.0	156.0	82.2
	85	161.0	161.0	165.0	147.0	172.0	106.0	157.0	157.0	160.0	150.0	169.0	106.0	151.0	151.0	152.0	150.0	164.0	107.0	142.0	142.0	142.0	142.0	158.0	107.0
	90	167.0	167.0	167.0	167.0	174.0	126.0	164.0	164.0	164.0	164.0	171.0	128.0	159.0	159.0	159.0	159.0	166.0	131.0	153.0	153.0	153.0	153.0	159.0	132.0

Notes:

1. All capacities shown are gross and have not considered indoor fan heat. To obtain **NET** cooling capacity subtract indoor fan heat. For indoor fan heat formula, refer to appropriate airflow table notes.
2. MBH = Total Gross Capacity
3. SHC = Sensible Heat Capacity

*Indicates both downflow and horizontal units.

Table 12. Gross Cooling Capacities 12½ Tons Three Phase Dehumidification (Hot Gas Reheat) or TXV Option High Efficiency T/Y*D151C3,4,W

		Ambient Temperature																							
		85						95						105						115					
Air	Ent	Entering Wet Bulb																							
Flow	DB	61		67		73		61		67		73		61		67		73		61		67		73	
CFM	(F)	MBH	SHC	MBH	SHC	MBH	SHC	MBH	SHC	MBH	SHC	MBH	SHC	MBH	SHC	MBH	SHC	MBH	SHC	MBH	SHC	MBH	SHC	MBH	SHC
2500*	75	123.8	88.0	138.9	73.4	155.2	55.8	118.2	84.4	132.8	70.1	148.6	52.6	112.1	80.7	126.2	66.6	141.5	49.2	105.6	76.8	119.1	62.8	133.8	45.6
	80	123.9	100.8	139.0	85.5	155.2	69.8	118.3	97.3	132.9	82.0	148.7	66.4	112.1	93.3	126.3	78.3	141.5	62.8	105.7	89.6	119.2	74.4	133.9	59.0
	85	124.0	113.6	139.1	98.3	155.3	82.5	118.5	110.1	133.0	94.7	148.8	79.1	112.5	106.3	126.4	91.0	141.6	75.4	104.3	104.3	119.3	87.1	134.0	71.6
	90	126.0	124.6	139.0	110.8	155.4	95.2	120.6	120.6	133.0	107.2	148.8	91.7	115.5	115.5	126.4	103.5	141.7	88.0	110.3	110.3	119.4	99.5	134.1	84.2
3250*	75	133.0	99.5	148.7	80.0	165.5	59.1	126.7	95.9	141.9	76.4	158.2	55.7	120.0	91.9	134.7	72.5	150.4	52.2	112.8	87.8	126.9	68.5	142.0	48.5
	80	133.1	115.7	148.8	96.0	165.6	76.1	126.9	112.0	142.1	92.4	158.3	72.5	120.2	108.1	134.8	88.6	150.5	68.8	113.2	104.1	127.0	84.5	142.1	64.9
	85	132.7	132.7	148.8	111.9	165.7	92.0	128.6	126.0	142.1	108.2	158.4	88.4	122.5	121.6	134.8	104.3	150.6	84.7	116.2	116.2	127.1	100.4	142.3	80.7
	90	139.8	139.8	148.9	127.6	165.7	107.7	134.5	134.5	142.2	124.0	158.4	104.1	128.9	128.9	135.0	120.1	150.7	100.5	122.8	122.8	127.5	116.3	142.4	96.5
4000	75	139.3	109.8	155.4	86.2	172.5	61.7	132.6	106.1	148.2	82.5	164.7	58.3	125.4	102.0	140.4	78.6	156.4	54.7	117.8	97.8	132.2	74.5	147.6	50.9
	80	139.6	128.9	155.5	105.4	172.6	81.5	133.1	125.4	148.3	101.7	164.8	77.8	126.2	121.5	140.6	97.7	156.5	74.0	119.0	115.2	132.3	93.6	147.7	70.1
	85	143.2	143.2	155.5	124.1	172.8	100.5	137.6	137.6	148.3	120.4	165.0	96.8	131.5	131.5	140.7	116.6	156.7	93.0	125.0	125.0	132.4	112.5	147.8	89.0
	90	151.0	151.0	156.1	143.3	172.8	119.2	145.3	145.3	149.0	139.6	165.0	115.6	139.0	139.0	141.6	136.1	156.7	111.7	132.4	132.4	134.0	129.4	147.9	107.6
4500	75	142.5	116.0	158.8	90.2	176.0	63.3	135.6	112.2	151.3	86.4	168.0	59.8	128.2	108.3	143.3	82.4	159.5	56.2	120.4	104.1	134.9	78.2	150.4	52.4
	80	143.3	137.5	158.8	111.1	176.2	84.8	135.1	135.1	151.4	107.3	168.1	81.1	130.0	127.1	143.5	103.5	159.6	77.3	122.7	122.1	135.0	99.3	150.5	73.3
	85	149.0	149.0	159.0	131.9	176.3	105.6	143.1	143.1	151.6	128.2	168.2	101.9	136.7	136.7	143.6	124.2	159.8	98.2	129.9	129.9	135.2	120.1	150.7	94.2
	90	157.2	157.2	160.1	153.3	176.4	126.4	151.1	151.1	151.1	151.1	168.3	122.6	144.6	144.6	145.9	142.5	159.7	118.6	137.6	137.6	138.2	137.5	150.8	114.8
5000	75	145.1	121.9	161.6	93.7	179.0	64.7	138.1	118.3	154.0	89.9	170.8	61.2	130.5	114.2	145.8	85.9	162.0	57.3	122.6	110.1	137.1	81.7	152.7	53.3
	80	145.6	145.6	161.6	116.5	179.2	87.9	140.4	138.6	154.0	112.8	170.9	84.2	133.1	133.1	145.8	108.8	162.1	80.3	126.2	126.2	137.1	104.5	152.9	76.3
	85	154.1	154.1	162.0	139.4	179.3	110.7	147.9	147.9	154.4	135.7	171.0	106.9	141.3	141.3	146.3	131.7	162.2	103.0	134.2	134.2	137.7	127.6	153.1	99.2
	90	162.6	162.6	162.5	162.5	179.5	133.2	156.3	156.3	157.1	154.9	171.2	129.5	149.5	149.5	149.4	149.4	162.4	125.5	142.2	142.2	142.2	142.2	153.1	121.5
5500	75	147.5	127.8	164.0	97.2	181.5	66.0	140.3	124.0	156.2	93.3	173.1	62.2	132.6	119.9	147.8	89.3	164.1	58.4	124.6	116.0	138.9	85.1	154.7	54.3
	80	150.2	149.4	164.1	121.8	181.7	90.9	143.5	143.5	156.2	117.9	173.2	87.1	136.8	136.8	147.9	114.0	164.3	83.2	129.7	129.7	139.0	109.8	154.8	79.2
	85	158.5	158.5	164.6	146.7	181.8	115.5	152.1	152.1	156.8	142.9	173.4	111.8	145.3	145.3	148.6	139.0	164.4	107.8	138.0	138.0	140.0	134.9	154.9	103.7
	90	167.4	167.4	167.9	167.1	182.1	139.9	160.8	160.8	160.7	160.7	173.6	136.1	153.8	153.8	153.7	153.7	164.6	132.2	146.3	146.3	146.2	146.2	155.1	128.2
6000	75	149.6	133.5	165.9	100.3	183.7	67.0	142.2	129.6	158.0	96.4	175.1	63.2	134.4	125.6	149.5	92.5	166.0	59.4	126.4	121.7	140.5	88.3	156.4	55.3
	80	153.4	153.4	166.1	126.9	183.8	93.6	147.0	147.0	158.1	123.0	175.2	90.0	140.2	140.2	149.6	118.9	166.1	86.1	132.8	132.8	140.6	115.0	156.5	82.0
	85	162.5	162.5	166.9	153.7	183.9	120.1	155.9	155.9	159.1	150.0	175.3	116.3	148.8	148.8	148.7	148.7	166.2	112.5	141.3	141.3	142.4	138.6	156.6	108.4
	90	171.6	171.6	171.6	171.6	184.3	146.4	164.8	164.8	164.7	164.7	175.7	142.6	157.6	157.6	157.5	157.5	166.5	138.7	149.9	149.9	149.9	149.9	157.0	134.7

Notes:

1. All capacities shown are gross and have not considered indoor fan heat. To obtain **NET** cooling capacity subtract indoor fan heat. For indoor fan heat formula, refer to appropriate airflow table notes.
2. MBH = Total Gross Capacity
3. SHC = Sensible Heat Capacity

*For 2500 and 3250 CFM - Unit applications below 320 CFM/Ton are only applicable to TCD models only (No Gas Heat). See below for restrictions:

- Electric heaters restricted on applications below 320 CFM/Ton.
- Dehumidification (Hot Gas Reheat) or TXV with Frostat and Crankcase Heaters are required on applications below 320 CFM/Ton.

Table 13. Gross Cooling Capacities 15 Tons Three Phase Standard Refrigeration System High Efficiency T/YC*181C3,4,W

		Ambient Temperature																							
		85						95						105						115					
Air	Ent	Entering Wet Bulb																							
Flow	DB	61		67		73		61		67		73		61		67		73		61		67		73	
CFM	(F)	MBH	SHC	MBH	SHC	MBH	SHC	MBH	SHC	MBH	SHC	MBH	SHC	MBH	SHC	MBH	SHC	MBH	SHC	MBH	SHC	MBH	SHC	MBH	SHC
5400	75	172	144	194	112	205	75.2	159	138	185	107	200	71.9	147	131	172	101	193	68	130	130	158	97	183	63.4
	80	175	169	195	138	207	103	164	162	186	134	202	99.7	153	153	173	128	194	95.4	142	142	158	122	183	90.5
	85	185	185	196	164	209	126	176	176	186	161	203	124	165	165	174	156	195	122	155	155	155	155	184	117
	90	195	195	195	195	211	149	188	188	190	184	204	148	178	178	179	179	196	147	168	168	167	167	184	144
6000	75	177	153	197	116	207	76	164	147	189	112	202	73.2	151	140	176	106	195	69.3	138	131	162	99.8	185	64.8
	80	181	180	198	144	209	105	170	170	189	142	204	103	159	159	177	136	196	99.4	148	148	162	130	186	94.6
	85	192	192	199	172	211	129	183	183	190	171	206	129	173	173	173	173	197	127	162	162	162	162	186	124
	90	201	201	200	200	214	153	194	194	195	194	208	155	185	185	185	185	199	154	175	175	175	175	187	152
6600	75	181	162	198	123	208	76.6	168	155	191	117	204	74.4	152	152	180	111	197	70.6	142	139	165	105	187	66.2
	80	186	186	200	151	210	107	177	177	192	148	206	105	166	166	180	144	198	102	154	154	166	137	188	98.6
	85	197	197	202	179	213	131	189	189	194	180	208	132	179	179	183	173	199	132	168	168	170	166	189	129
	90	204	204	205	202	215	157	199	199	199	199	209	159	191	191	191	191	201	160	181	181	181	181	190	160
7200	75	184	170	200	127	209	79.1	168	168	193	121	206	76.4	156	156	182	116	198	71.9	145	145	168	110	189	67.4
	80	191	191	202	153	211	108	182	182	194	154	207	107	171	171	183	151	199	105	159	159	169	145	190	102
	85	200	200	204	185	214	134	194	194	194	194	209	136	185	185	187	181	201	135	174	174	174	174	191	134
	90	207	207	208	207	217	160	203	203	203	203	211	163	195	195	195	195	203	166	186	186	186	186	192	167

Notes:

1. All capacities shown are gross and have not considered indoor fan heat. To obtain **NET** cooling capacity subtract indoor fan heat. For indoor fan heat formula, refer to appropriate airflow table notes.
2. MBH = Total Gross Capacity
3. SHC = Sensible Heat Capacity

*Indicates both downflow and horizontal units.

Table 14. Gross Cooling Capacities 15 Tons Three Phase Dehumidification (Hot Gas Reheat) or TXV Option High Efficiency T/Y*D181C3,4,W

		Ambient Temperature																							
		85						95						105						115					
Air	Ent	Entering Wet Bulb																							
Flow	DB	61		67		73		61		67		73		61		67		73		61		67		73	
CFM	(F)	MBH	SHC	MBH	SHC	MBH	SHC	MBH	SHC	MBH	SHC	MBH	SHC	MBH	SHC	MBH	SHC	MBH	SHC	MBH	SHC	MBH	SHC	MBH	SHC
3000*	75	150.0	106.0	168.0	88.9	187.7	68.3	144.0	102.3	161.4	85.3	180.6	64.8	137.5	98.4	154.4	81.6	173.0	61.2	130.8	94.4	147.1	77.8	165.0	57.5
	80	150.2	121.0	168.1	103.0	187.8	84.7	144.1	117.3	161.5	99.3	180.7	81.1	137.7	113.4	154.6	95.4	173.1	77.2	131.0	109.3	147.3	91.5	165.1	73.3
	85	150.2	135.8	168.2	117.9	187.9	99.5	144.2	132.1	161.7	114.1	180.8	95.8	137.9	128.1	154.8	110.3	173.2	92.0	130.7	122.5	147.5	106.2	165.2	88.0
	90	151.8	148.3	168.4	132.7	188.0	114.2	146.3	144.5	161.9	128.9	180.9	110.5	140.5	140.5	155.0	125.0	173.3	106.7	134.9	134.9	147.7	120.9	165.4	102.7
3900*	75	161.5	119.8	180.4	96.8	201.0	72.4	154.8	115.8	173.1	93.0	193.0	68.7	147.7	111.8	165.4	89.0	184.6	64.9	140.2	107.5	157.2	84.8	175.7	61.0
	80	161.7	138.5	180.6	115.6	201.1	92.3	154.9	134.5	173.3	111.7	193.1	88.5	147.8	130.4	165.6	107.6	184.7	84.5	140.4	126.1	157.4	103.5	175.8	80.4
	85	162.6	155.0	180.8	134.3	201.3	110.9	156.3	150.7	173.5	130.3	193.3	107.0	149.8	146.3	165.8	126.3	184.9	103.0	142.9	141.9	157.7	122.0	176.0	98.9
	90	168.5	168.5	180.9	152.7	201.5	129.4	162.8	162.8	173.6	148.8	193.5	125.5	156.8	156.8	165.9	144.6	185.1	121.5	150.5	150.5	157.9	140.4	176.2	117.3
4800	75	169.6	132.0	189.0	104.3	210.2	75.6	162.4	127.9	181.2	100.4	201.5	71.8	154.7	123.7	172.8	96.2	192.4	67.9	146.6	119.2	164.1	91.9	182.8	63.9
	80	170.0	154.3	189.3	126.8	210.4	98.8	162.9	150.3	181.4	122.7	201.7	94.8	155.4	146.0	173.1	118.6	192.6	90.7	147.5	139.4	164.4	114.3	183.0	86.5
	85	173.4	173.4	189.5	149.0	210.6	121.0	166.9	166.9	181.7	145.0	201.9	117.0	160.5	160.5	173.3	140.7	192.8	112.9	153.7	153.7	164.6	136.3	183.3	108.6
	90	182.3	182.3	189.9	171.1	210.8	143.1	176.1	176.1	182.2	167.0	202.2	139.1	169.5	169.5	169.3	169.3	193.1	134.9	162.5	162.5	165.7	155.6	183.6	130.6
5400	75	173.7	139.5	193.4	108.9	214.8	77.5	166.2	135.3	185.2	104.9	205.8	73.7	158.3	130.9	176.6	100.7	196.3	69.7	150.0	126.5	167.6	96.4	186.4	65.6
	80	174.6	164.4	193.7	133.7	215.0	102.8	164.2	164.2	185.5	129.6	206.0	98.7	159.8	153.0	176.9	125.4	196.5	94.5	152.1	148.0	167.9	121.0	186.6	90.3
	85	180.1	180.1	193.9	158.1	215.3	127.3	173.8	173.8	185.8	154.0	206.3	123.2	167.0	167.0	177.2	149.7	196.8	119.0	159.9	159.9	168.2	145.3	186.9	114.7
	90	189.8	189.8	189.8	189.8	215.5	151.6	183.3	183.3	183.3	183.3	206.6	147.6	176.4	176.4	179.1	170.7	197.1	143.4	169.1	169.1	170.7	165.6	187.2	139.0
6000	75	177.2	146.6	197.0	113.2	218.7	79.2	169.4	142.4	188.6	109.1	209.4	75.4	161.3	138.0	179.8	104.9	199.6	71.3	152.8	133.5	170.5	100.5	189.4	67.0
	80	178.8	171.0	197.4	140.3	218.9	106.5	169.8	169.8	189.0	136.2	209.6	102.4	164.0	161.4	180.1	131.9	199.8	98.2	155.8	155.8	170.9	127.5	189.6	93.9
	85	186.4	186.4	197.6	166.9	219.2	133.3	179.8	179.8	189.3	162.7	209.9	129.2	172.8	172.8	180.6	158.4	200.2	125.0	165.3	165.3	171.5	153.9	190.0	120.6
	90	196.7	196.7	196.5	196.5	219.4	159.9	189.8	189.8	189.7	189.7	210.2	155.8	182.6	182.6	183.8	180.6	200.5	151.6	174.9	174.9	174.8	174.8	190.2	146.9
6600	75	180.2	153.4	200.2	117.4	221.9	80.8	172.3	149.2	191.5	113.2	212.4	76.8	164.0	144.8	182.5	108.9	202.4	72.6	155.4	140.2	172.9	104.5	191.9	68.2
	80	182.9	179.1	200.5	146.6	222.1	110.1	175.6	174.4	191.9	142.5	212.6	105.9	167.6	167.6	182.7	138.0	202.6	101.7	160.2	160.2	173.2	133.4	192.1	97.3
	85	192.0	192.0	201.0	175.4	222.5	139.1	185.1	185.1	192.5	171.2	213.0	134.9	177.8	177.8	183.6	166.9	203.0	130.7	170.1	170.1	169.9	169.9	192.5	126.2
	90	202.7	202.7	204.3	199.9	222.7	167.8	195.5	195.5	196.3	195.1	213.2	163.5	188.0	188.0	187.9	187.9	203.2	159.2	180.0	180.0	179.9	179.9	192.8	154.7
7200	75	182.8	160.1	202.8	121.3	224.7	82.1	174.8	155.8	194.0	117.1	214.9	78.0	166.4	151.4	184.7	112.8	204.7	73.7	157.7	146.8	175.0	108.4	193.9	69.4
	80	186.0	186.0	203.2	152.8	224.9	113.4	179.1	179.1	194.2	148.3	215.2	109.3	171.8	171.8	185.0	143.9	205.0	105.0	164.1	164.1	175.4	139.3	194.3	100.6
	85	196.9	196.9	204.0	183.7	225.2	144.5	189.8	189.8	195.4	179.5	215.6	140.5	182.3	182.3	182.1	182.1	205.4	136.2	174.3	174.3	177.1	167.2	194.7	131.7
	90	207.9	207.9	207.8	207.8	225.4	175.3	200.6	200.6	200.5	200.5	215.8	171.1	192.8	192.8	192.6	192.6	205.7	166.7	184.5	184.5	184.4	184.4	195.1	162.2

Notes:

1. All capacities shown are gross and have not considered indoor fan heat. To obtain **NET** cooling capacity subtract indoor fan heat. For indoor fan heat formula, refer to appropriate airflow table notes.
2. MBH = Total Gross Capacity
3. SHC = Sensible Heat Capacity

*For 3000 and 3900 CFM - Unit applications below 320 CFM/Ton are only applicable to TCD models only (No Gas Heat). See below for restrictions:

- Electric heaters restricted on applications below 320 CFM/Ton.
- Dehumidification (Hot Gas Reheat) or TXV with Frostat and Crankcase Heaters are required on applications below 320 CFM/Ton.

Table 15. Gross Cooling Capacities 17½ Tons Three Phase Standard Refrigeration Option High Efficiency T/YC*211C3,4,W

		Ambient Temperature																							
		85						95						105						115					
Air	Ent	Entering Wet Bulb																							
Flow	DB	61		67		73		61		67		73		61		67		73		61		67		73	
CFM	(F)	MBH	SHC	MBH	SHC	MBH	SHC	MBH	SHC	MBH	SHC	MBH	SHC	MBH	SHC	MBH	SHC	MBH	SHC	MBH	SHC	MBH	SHC	MBH	SHC
6300	75	200.0	169.0	224.0	130.0	233.0	86.2	184.0	162.0	215.0	125.0	231.0	83.3	169.0	154.0	199.0	118.0	226.0	79.3	147.0	147.0	180.0	113.0	214.0	74.2
	80	202.0	202.0	225.0	161.0	236.0	118.0	190.0	190.0	216.0	158.0	234.0	117.0	177.0	177.0	200.0	151.0	227.0	112.0	164.0	164.0	181.0	142.0	214.0	107.0
	85	216.0	216.0	227.0	191.0	239.0	143.0	206.0	206.0	217.0	190.0	236.0	146.0	193.0	193.0	202.0	184.0	228.0	144.0	180.0	180.0	185.0	176.0	215.0	139.0
	90	227.0	227.0	230.0	221.0	242.0	169.0	220.0	220.0	220.0	220.0	239.0	175.0	209.0	209.0	209.0	209.0	229.0	174.0	196.0	196.0	195.0	195.0	217.0	171.0
7000	75	205.0	180.0	226.0	134.0	234.0	87.6	190.0	172.0	219.0	131.0	233.0	84.8	174.0	164.0	204.0	124.0	228.0	80.8	155.0	155.0	184.0	116.0	218.0	76.0
	80	210.0	210.0	228.0	167.0	237.0	119.0	198.0	198.0	220.0	167.0	236.0	120.0	185.0	185.0	205.0	160.0	229.0	117.0	171.0	171.0	186.0	152.0	218.0	112.0
	85	223.0	223.0	230.0	199.0	241.0	145.0	215.0	215.0	222.0	202.0	238.0	150.0	202.0	202.0	209.0	197.0	231.0	150.0	188.0	188.0	191.0	189.0	219.0	147.0
	90	232.0	232.0	233.0	230.0	244.0	173.0	227.0	227.0	227.0	227.0	241.0	180.0	218.0	218.0	218.0	218.0	232.0	182.0	205.0	205.0	204.0	204.0	221.0	181.0
7700	75	210.0	190.0	228.0	138.0	235.0	88.9	195.0	183.0	222.0	137.0	234.0	86.0	179.0	175.0	208.0	130.0	229.0	82.4	161.0	161.0	188.0	122.0	220.0	77.7
	80	217.0	217.0	231.0	173.0	239.0	120.0	206.0	206.0	223.0	174.0	237.0	121.0	192.0	192.0	209.0	169.0	231.0	121.0	178.0	178.0	190.0	161.0	221.0	116.0
	85	228.0	228.0	232.0	206.0	242.0	148.0	221.0	221.0	226.0	211.0	240.0	153.0	210.0	210.0	214.0	209.0	234.0	156.0	196.0	196.0	195.0	195.0	222.0	154.0
	90	235.0	235.0	235.0	235.0	245.0	176.0	232.0	232.0	232.0	232.0	243.0	185.0	224.0	224.0	224.0	224.0	235.0	189.0	213.0	213.0	212.0	212.0	224.0	191.0
8400	75	214.0	200.0	230.0	141.0	236.0	90.3	200.0	193.0	224.0	141.0	235.0	87.4	181.0	181.0	211.0	136.0	230.0	83.8	166.0	166.0	191.0	128.0	222.0	79.2
	80	222.0	222.0	232.0	177.0	239.0	133.0	213.0	213.0	226.0	181.0	238.0	123.0	199.0	199.0	213.0	178.0	233.0	124.0	184.0	184.0	194.0	170.0	223.0	121.0
	85	231.0	231.0	234.0	211.0	243.0	149.0	226.0	226.0	229.0	220.0	241.0	155.0	216.0	216.0	216.0	216.0	235.0	161.0	203.0	203.0	202.0	202.0	224.0	162.0
	90	238.0	238.0	238.0	238.0	246.0	178.0	235.0	235.0	235.0	235.0	244.0	189.0	229.0	229.0	229.0	229.0	237.0	195.0	219.0	219.0	219.0	219.0	227.0	199.0

Notes:

1. All capacities shown are gross and have not considered indoor fan heat. To obtain **NET** cooling capacity subtract indoor fan heat. For indoor fan heat formula, refer to appropriate airflow table notes.
2. MBH = Total Gross Capacity
3. SHC = Sensible Heat Capacity

*Indicates both downflow and horizontal units.

Table 16. Gross Cooling Capacities 17½ Tons Three Phase TXV Option High Efficiency T/Y*D211C3,4,W

		Ambient Temperature																							
		85						95						105						115					
Air	Ent	Entering Wet Bulb																							
Flow	DB	61		67		73		61		67		73		61		67		73		61		67		73	
CFM	(F)	MBH	SHC	MBH	SHC	MBH	SHC	MBH	SHC	MBH	SHC	MBH	SHC	MBH	SHC	MBH	SHC	MBH	SHC	MBH	SHC	MBH	SHC	MBH	SHC
3500*	75	178.1	125.2	199.2	102.8	222.1	78.3	170.4	120.6	190.9	98.4	213.1	74.0	162.3	115.7	182.1	93.7	203.6	69.5	153.6	110.7	172.8	88.9	193.6	64.9
	80	178.3	143.9	199.4	121.1	222.2	97.7	170.6	139.3	191.1	116.5	213.3	93.4	162.4	134.5	182.3	111.8	203.8	88.8	153.8	129.5	173.1	106.8	193.7	84.0
	85	178.6	163.0	199.6	139.7	222.4	116.2	171.0	158.4	191.3	135.0	213.5	111.9	163.0	153.7	182.5	130.2	204.0	107.2	151.7	151.7	173.3	125.2	194.0	102.4
	90	181.8	177.2	199.8	158.2	222.6	134.6	175.2	171.7	191.5	153.5	213.7	130.2	168.1	165.8	182.7	148.7	204.2	125.5	160.6	160.1	173.5	143.8	194.2	120.6
4550*	75	190.8	142.2	212.7	113.0	236.1	82.3	182.3	137.4	203.5	108.3	226.2	78.0	173.3	132.4	193.9	103.4	215.8	73.4	163.8	127.2	183.7	98.3	204.8	68.6
	80	191.2	166.4	213.0	136.6	236.3	106.8	182.8	161.6	203.8	131.8	226.5	102.3	173.9	156.6	194.1	126.9	216.0	97.5	164.7	151.5	184.0	121.8	205.1	92.6
	85	193.7	186.8	213.2	160.2	236.6	130.2	186.2	180.5	204.1	155.4	226.8	125.6	178.3	173.9	194.4	150.4	216.3	120.8	169.9	167.2	184.3	145.3	205.3	115.8
	90	201.2	201.2	213.6	183.9	236.9	153.5	194.2	194.2	204.7	179.3	227.0	148.9	186.6	186.6	195.2	174.4	216.6	144.0	178.5	178.5	185.2	169.3	205.6	139.0
5600	75	199.5	157.9	221.6	122.1	245.5	85.7	190.5	153.0	212.0	117.4	234.9	81.2	180.9	147.9	201.7	112.4	223.8	76.5	171.0	142.6	190.9	107.3	212.2	71.6
	80	200.9	187.5	221.9	150.5	245.8	114.8	192.2	182.6	212.3	145.8	235.3	110.1	179.9	179.9	202.0	140.8	224.1	105.2	173.8	166.9	191.2	135.6	212.5	100.2
	85	207.3	204.9	222.5	179.2	246.2	142.9	199.3	198.8	213.0	174.6	235.4	138.1	190.6	190.6	202.7	169.6	224.4	133.3	182.0	182.0	192.0	164.4	212.8	128.2
	90	217.4	217.4	224.2	208.4	246.5	171.0	209.5	209.5	214.9	203.9	235.8	166.2	201.4	201.4	201.3	201.3	224.8	161.4	192.6	192.6	195.4	187.3	213.2	156.4
6300	75	203.9	167.7	226.2	127.9	250.3	87.7	194.8	162.9	216.2	123.2	239.2	83.0	185.0	157.7	205.6	118.1	227.8	78.4	174.8	152.4	194.5	112.9	215.8	73.
	80	202.9	202.9	226.5	159.5	250.5	119.7	195.2	195.2	216.6	154.8	239.4	114.8	188.9	182.8	206.0	149.7	228.1	110.1	179.6	175.4	194.9	144.5	216.1	105.0
	85	214.6	214.6	227.5	191.5	250.9	150.9	206.7	206.7	217.4	186.6	239.8	146.1	198.1	198.1	207.2	181.8	228.5	141.3	189.1	189.1	196.3	176.6	216.5	136.2
	90	226.3	226.3	226.2	226.2	251.4	182.3	218.0	218.0	221.1	212.1	240.4	177.4	209.4	209.4	211.9	204.9	228.9	172.4	200.2	200.2	202.0	197.2	217.2	167.6
7000	75	207.8	177.3	229.9	133.4	254.2	89.6	198.5	172.5	219.7	128.6	242.8	84.9	188.5	167.4	208.8	123.5	231.1	80.1	178.2	162.0	197.4	118.3	218.8	75.1
	80	212.0	205.1	230.4	168.2	254.5	124.4	203.5	198.3	220.0	163.5	243.1	119.6	194.3	190.9	209.4	158.4	231.4	114.7	184.7	183.5	198.1	153.1	219.2	109.6
	85	221.9	221.9	231.8	203.6	254.9	158.8	213.4	213.4	221.6	198.6	243.5	153.8	204.7	204.7	211.2	193.7	231.8	149.0	195.4	195.4	200.2	188.5	219.6	143.9
	90	234.1	234.1	236.8	229.0	255.6	193.4	225.4	225.4	227.5	221.6	244.3	188.5	216.5	216.5	217.7	214.0	232.5	183.4	206.9	206.9	207.6	206.7	220.6	178.6
7700	75	211.3	186.8	233.0	138.7	257.4	91.4	201.8	181.9	222.6	133.9	245.7	86.5	191.8	176.7	211.5	128.8	233.8	81.7	181.3	171.3	199.9	123.5	221.3	76.7
	80	217.2	212.9	233.7	176.7	257.8	129.0	208.4	206.0	223.3	171.9	246.1	124.1	199.0	198.7	212.3	166.8	234.2	119.3	189.0	189.0	200.8	161.5	221.7	114.1
	85	228.2	228.2	235.8	215.3	258.2	166.4	219.5	219.5	225.5	210.3	246.5	161.4	210.4	210.4	210.3	210.3	234.6	156.6	200.8	200.8	200.7	200.7	222.2	151.5
	90	241.0	241.0	242.8	238.1	259.2	204.2	231.9	231.9	233.1	230.7	247.7	199.3	222.4	222.4	222.3	222.3	235.7	194.2	212.6	212.6	212.6	212.6	223.5	189.2
8400	75	214.5	195.9	235.7	143.9	260.2	92.9	204.9	191.1	225.0	139.0	248.3	88.0	190.7	190.7	213.7	133.9	236.1	83.2	181.3	181.3	201.9	128.6	223.4	78.2
	80	221.9	220.3	236.6	185.0	260.5	133.5	212.1	212.1	225.8	180.0	248.6	128.5	203.1	203.1	214.8	175.0	236.5	123.7	193.4	193.4	203.2	169.7	223.8	118.5
	85	233.9	233.9	239.5	226.8	261.0	173.9	224.8	224.8	224.7	224.7	249.2	168.9	215.5	215.5	215.4	215.4	236.9	163.8	205.5	205.5	207.7	200.6	224.4	158.9
	90	247.0	247.0	248.0	246.9	262.4	214.8	237.7	237.7	237.6	237.6	250.7	209.8	227.8	227.8	227.8	227.8	238.6	204.7	217.8	217.8	217.7	217.7	226.3	199.7

Notes:

1. All capacities shown are gross and have not considered indoor fan heat. To obtain **NET** cooling capacity subtract indoor fan heat. For indoor fan heat formula, refer to appropriate airflow table notes.
2. MBH = Total Gross Capacity
3. SHC = Sensible Heat Capacity

*For 3500 and 4550 CFM - Unit applications below 320 CFM/Ton are only applicable to TCD models only (No Gas Heat). See below for restrictions:

- Electric heaters restricted on applications below 320 CFM/Ton.
- Dehumidification (Hot Gas Reheat) or TXV with Frostat and Crankcase Heaters are required on applications below 320 CFM/Ton.

Table 17. Gross Cooling Capacities 20 Tons Three Phase Standard Refrigeration Option High Efficiency T/YC*241C3,4,W

		Ambient Temperature																							
		85						95						105						115					
Air	Ent	Entering Wet Bulb																							
Flow	DB	61		67		73		61		67		73		61		67		73		61		67		73	
CFM	(F)	MBH	SHC	MBH	SHC	MBH	SHC	MBH	SHC	MBH	SHC	MBH	SHC	MBH	SHC	MBH	SHC	MBH	SHC	MBH	SHC	MBH	SHC	MBH	SHC
7200	75	246	205	273	158	284	105	228	196	263	152	280	101	208	186	246	145	273	96.5	191	176	222	136	261	91.5
	80	250	245	274	192	287	142	232	232	264	190	283	141	216	216	246	183	274	135	201	201	223	172	261	130
	85	263	263	275	227	290	171	251	251	265	228	285	173	236	236	248	221	275	170	219	219	225	211	262	168
	90	274	274	278	262	293	201	266	266	268	265	288	206	254	254	254	254	277	205	239	239	237	237	262	205
8000	75	253	218	275	163	285	107	234	209	267	159	282	103	214	199	252	152	275	98.3	194	189	228	142	266	93.6
	80	257	257	277	199	289	144	243	243	268	199	285	143	227	227	252	194	277	140	210	210	228	184	266	136
	85	270	270	279	236	292	174	261	261	270	240	288	177	247	247	255	237	278	177	230	230	232	226	266	177
	90	280	280	282	273	295	205	274	274	274	274	291	212	264	264	264	264	280	214	250	250	248	248	267	218
8800	75	258	230	278	167	287	109	240	221	270	164	284	105	219	211	256	159	277	100	199	199	232	149	269	95.5
	80	264	264	280	204	290	155	252	252	271	208	287	145	236	236	257	205	279	144	218	218	233	195	269	141
	85	276	276	282	244	293	177	268	268	274	250	290	181	256	256	260	251	281	182	240	240	238	238	269	185
	90	285	285	286	281	297	209	280	280	280	280	293	217	271	271	271	271	283	221	258	258	258	258	271	229
9600	75	262	240	280	169	288	110	246	233	273	169	285	106	225	223	260	166	278	102	205	205	236	156	271	97.1
	80	270	270	282	209	291	161	260	260	274	215	288	147	245	245	261	215	281	147	226	226	237	205	271	146
	85	280	280	284	250	295	179	274	274	277	260	291	184	263	263	265	263	282	186	248	248	246	246	272	193
	90	288	288	288	288	298	212	284	284	284	284	294	222	276	276	276	276	285	228	264	264	265	265	275	240

Notes:

1. All capacities shown are gross and have not considered indoor fan heat. To obtain **NET** cooling capacity subtract indoor fan heat. For indoor fan heat formula, refer to appropriate airflow table notes.
2. MBH = Total Gross Capacity
3. SHC = Sensible Heat Capacity

*Indicates both downflow and horizontal units.

Table 18. Gross Cooling Capacities 20Tons Three Phase TXV Option High Efficiency T/Y*D241C3,4,W

		Ambient Temperature																							
		85						95						105						115					
Air	Ent	Entering Wet Bulb																							
Flow	DB	61		67		73		61		67		73		61		67		73		61		67		73	
CFM	(F)	MBH	SHC	MBH	SHC	MBH	SHC	MBH	SHC	MBH	SHC	MBH	SHC	MBH	SHC	MBH	SHC	MBH	SHC	MBH	SHC	MBH	SHC	MBH	SHC
4000*	75	208.5	149.1	233.3	122.6	260.1	94.5	199.6	143.8	223.6	117.3	249.8	89.3	190.1	138.1	213.4	111.9	238.6	84.0	180.0	132.3	202.5	105.8	226.9	78.5
	80	208.7	171.1	233.4	144.4	260.2	117.1	199.9	165.6	223.8	139.1	249.8	111.8	190.4	159.9	213.6	133.4	238.7	106.3	180.4	153.9	202.7	127.6	226.9	100.7
	85	209.5	193.0	233.6	166.3	260.3	138.9	200.8	187.5	224.0	160.9	249.9	133.7	191.4	181.7	213.8	155.2	238.9	128.1	181.6	175.7	203.0	149.3	227.1	122.4
	90	212.7	212.7	233.9	188.1	260.5	160.6	205.2	205.2	224.3	182.6	250.1	155.2	197.4	197.4	214.1	176.8	239.1	149.7	189.0	189.0	203.4	170.8	227.3	143.9
5200*	75	223.8	169.6	249.5	135.2	277.5	99.6	213.8	163.8	238.8	129.6	265.8	94.2	203.4	157.8	227.5	123.9	253.4	88.6	192.4	151.6	215.6	117.8	240.4	82.9
	80	224.5	197.4	249.7	163.1	277.6	128.2	214.8	191.6	239.1	157.5	265.9	122.7	204.4	185.6	227.8	151.6	253.6	117.0	193.5	179.4	215.9	145.6	240.6	111.1
	85	226.7	222.0	249.9	190.8	277.9	155.9	217.9	215.9	239.4	185.1	266.2	150.3	208.8	208.8	228.2	179.2	253.8	144.5	199.6	199.6	216.3	173.0	240.8	138.6
	90	237.7	237.7	250.8	218.3	278.1	183.4	229.4	229.4	240.3	212.6	266.5	177.8	220.4	220.4	229.2	206.6	254.1	172.0	211.0	211.0	217.5	200.4	241.1	165.9
6400	75	234.3	187.9	260.5	146.4	289.2	103.7	223.9	182.1	249.1	140.7	276.7	98.2	212.8	175.9	237.1	134.8	263.3	92.5	201.1	169.5	224.3	128.7	249.4	86.5
	80	235.9	221.8	260.8	180.1	289.4	138.0	225.7	215.9	249.4	174.3	276.9	132.3	214.9	209.8	237.3	168.2	263.6	126.5	202.8	202.8	224.6	161.9	249.6	120.4
	85	243.8	243.8	261.4	213.2	289.7	171.3	234.9	234.9	250.1	207.4	277.2	165.6	225.3	225.3	238.2	201.3	264.0	159.7	215.3	215.3	225.7	195.0	250.0	153.6
	90	257.1	257.1	263.2	246.7	290.1	204.5	247.9	247.9	252.1	240.8	277.5	198.6	238.1	238.1	240.6	234.8	264.3	192.6	227.7	227.7	228.5	224.2	250.4	186.3
7200	75	239.8	199.6	266.0	153.5	295.0	106.1	229.0	193.6	254.2	147.8	282.1	100.6	217.6	187.4	241.8	141.7	268.2	94.7	205.6	180.9	228.6	138.4	253.8	88.7
	80	242.3	237.5	266.3	190.6	295.3	144.0	230.8	230.8	254.6	184.7	282.3	138.3	221.3	221.1	242.2	178.6	268.6	132.4	210.7	210.7	229.2	172.3	254.2	126.2
	85	253.7	253.7	267.4	227.6	295.7	181.1	244.3	244.3	255.7	221.6	282.7	175.3	234.3	234.3	243.5	215.5	269.1	169.3	223.6	223.6	230.6	209.1	254.6	163.1
	90	267.6	267.6	270.3	265.1	296.0	217.7	257.9	257.9	257.8	257.8	283.2	211.9	247.5	247.5	247.5	247.5	269.6	205.7	236.6	236.6	236.6	236.6	255.3	199.4
8000	75	244.5	210.8	270.7	160.1	299.8	108.3	233.4	204.7	258.5	154.3	286.5	102.8	221.8	198.5	245.8	148.2	272.4	96.9	209.5	191.9	232.3	141.9	257.5	90.8
	80	248.1	248.1	271.1	200.8	300.1	149.8	238.5	238.5	259.0	194.8	286.8	144.0	228.4	228.4	246.3	188.7	272.8	138.1	217.6	217.6	232.9	182.3	258.0	131.8
	85	262.5	262.5	272.6	241.6	300.5	190.5	252.6	252.6	260.7	235.6	287.3	184.7	242.1	242.1	248.1	229.3	273.3	178.7	231.0	231.0	235.0	222.9	258.3	172.1
	90	277.2	277.2	277.0	277.0	301.0	230.6	266.9	266.9	266.8	266.8	288.0	224.7	256.0	256.0	256.0	256.0	274.1	218.5	244.6	244.6	244.5	244.5	259.4	212.1
8800	75	248.5	221.7	274.6	166.6	303.7	110.4	237.3	215.6	262.1	160.6	290.2	104.8	225.4	209.3	249.0	154.6	275.8	98.9	213.0	202.7	235.3	148.3	260.6	92.7
	80	255.2	255.2	275.2	210.8	304.0	155.3	245.3	245.3	262.8	204.7	290.6	149.6	234.7	234.7	249.8	198.5	276.2	143.5	223.6	223.6	236.2	192.0	261.1	137.3
	85	270.2	270.2	277.2	255.2	304.3	199.4	259.9	259.9	265.1	249.2	291.0	193.6	249.0	249.0	252.3	242.9	276.7	187.4	237.5	237.5	239.1	236.5	261.6	180.9
	90	285.5	285.5	285.4	285.4	305.2	243.0	274.8	274.8	274.8	274.8	292.1	237.2	263.5	263.5	263.5	263.5	277.9	231.0	251.5	251.5	251.5	251.5	263.0	224.5
9600	75	252.1	232.3	277.9	172.8	306.9	112.3	240.7	226.2	265.2	166.9	293.3	106.7	228.7	219.9	251.7	160.6	278.6	100.7	216.3	213.3	237.8	154.1	263.2	94.5
	80	261.5	261.5	278.7	220.4	307.3	160.6	251.2	251.2	266.1	214.3	293.8	155.0	240.4	240.4	252.8	208.0	279.2	148.9	228.8	228.8	238.9	201.5	263.8	142.6
	85	277.0	277.0	281.4	268.6	307.7	208.4	266.4	266.4	269.2	262.5	294.2	202.3	255.1	255.1	254.9	254.9	279.7	196.0	243.1	243.1	243.0	243.0	264.4	189.6
	90	292.8	292.8	292.8	292.8	308.7	255.2	281.8	281.8	281.8	281.8	295.6	249.4	270.1	270.1	270.1	270.1	281.3	243.2	257.7	257.7	257.7	257.7	266.2	236.7

Notes:

1. All capacities shown are gross and have not considered indoor fan heat. To obtain **NET** cooling capacity subtract indoor fan heat. For indoor fan heat formula, refer to appropriate airflow table notes.
2. MBH = Total Gross Capacity
3. SHC = Sensible Heat Capacity

*For 4000 and 5200 CFM - Unit applications below 320 CFM/Ton are only applicable to TCD models only (No Gas Heat). See below for restrictions:

- Electric heaters restricted on applications below 320 CFM/Ton.
- Dehumidification (Hot Gas Reheat) or TXV with Frostat and Crankcase Heaters are required on applications below 320 CFM/Ton.

Table 19. Gross Cooling Capacities 20Tons Three Phase Dehumidification (Hot Gas Reheat) Option High Efficiency T/Y*D241C3,4,W

		Ambient Temperature																							
		85						95						105						115					
Air	Ent	Entering Wet Bulb																							
Flow	DB	61		67		73		61		67		73		61		67		73		61		67		73	
CFM	(F)	MBH	SHC	MBH	SHC	MBH	SHC	MBH	SHC	MBH	SHC	MBH	SHC	MBH	SHC	MBH	SHC	MBH	SHC	MBH	SHC	MBH	SHC	MBH	SHC
4000*	75	197.5	138.9	222.3	116.0	249.8	89.2	188.8	133.4	213.0	110.6	239.6	83.8	179.7	127.6	203.1	105.0	228.8	78.3	170.1	121.7	192.6	99.2	217.3	72.5
	80	197.7	159.2	222.6	135.8	249.8	111.4	189.0	153.7	213.3	130.3	239.6	105.8	180.0	147.9	203.4	124.6	228.8	100.1	170.4	141.9	193.0	118.7	217.4	94.2
	85	198.2	179.3	222.9	156.3	250.0	132.0	189.7	173.8	213.5	150.7	239.8	126.4	180.8	168.1	203.7	145.0	229.0	120.7	171.4	162.2	193.3	139.1	217.7	114.8
	90	200.5	196.8	223.1	176.7	250.3	152.5	192.8	190.9	213.7	171.0	240.1	147.0	184.8	184.8	203.8	165.2	229.3	141.2	176.9	176.9	193.5	159.3	217.9	135.3
5200*	75	213.1	158.3	239.0	127.6	267.2	94.6	203.5	152.5	228.5	121.8	255.7	88.9	193.2	146.3	217.5	115.8	243.7	83.1	182.7	140.0	206.0	109.6	231.1	77.1
	80	213.5	183.8	239.3	153.7	267.4	122.1	204.0	178.0	228.9	147.9	255.9	116.3	194.0	171.9	217.9	141.9	243.9	110.3	183.5	165.7	206.4	135.7	231.3	104.1
	85	215.3	209.9	239.7	179.7	267.7	148.3	204.6	204.6	229.1	173.7	256.2	142.4	197.0	194.2	218.1	167.6	244.2	136.4	187.4	187.4	206.7	161.4	231.6	130.3
	90	224.3	224.3	240.1	205.2	268.0	174.4	216.2	216.2	229.8	199.4	256.6	168.6	207.6	207.6	218.9	193.3	244.5	162.5	198.7	198.7	207.6	187.1	232.0	156.4
6400	75	223.7	175.3	250.2	138.3	279.0	98.8	213.5	169.3	239.0	132.3	266.6	93.0	202.6	163.0	227.2	126.1	253.7	87.0	191.3	156.4	214.9	119.7	240.2	80.8
	80	224.9	206.3	250.6	169.7	279.2	131.4	214.8	200.3	239.4	163.6	266.8	125.3	204.2	194.1	227.7	157.5	253.9	119.2	193.2	187.7	215.2	151.0	240.5	112.9
	85	230.5	230.5	251.0	200.6	279.6	162.9	221.7	221.7	239.8	194.5	267.2	156.9	212.5	212.5	228.1	188.2	254.3	150.7	202.8	202.8	215.9	181.8	240.9	144.4
	90	243.6	243.6	252.4	231.7	280.0	194.4	234.6	234.6	241.5	225.7	267.7	188.3	225.1	225.1	230.0	219.5	254.6	181.9	215.2	215.2	215.6	215.6	241.2	175.5
7200	75	229.2	185.9	255.7	150.2	284.8	101.3	218.6	179.7	244.1	144.1	272.0	95.4	207.4	173.3	231.9	138.0	258.6	89.4	195.8	166.7	219.1	131.7	244.7	83.2
	80	231.1	220.6	256.3	179.6	285.1	137.0	220.8	214.5	244.6	173.3	272.3	130.9	208.4	208.4	232.5	167.0	258.9	124.7	199.2	197.3	219.8	160.4	245.0	118.3
	85	240.3	240.3	256.9	213.7	285.5	172.0	231.1	231.1	245.4	207.5	272.7	165.9	221.4	221.4	233.3	201.2	259.4	159.7	211.2	211.2	220.8	194.7	245.5	153.3
	90	254.0	254.0	259.2	248.5	286.0	206.7	244.5	244.5	248.0	242.5	273.2	200.5	234.5	234.5	235.0	235.0	259.8	194.1	224.0	224.0	225.1	224.1	246.0	187.6
8000	75	233.9	196.0	260.5	150.9	289.7	103.6	223.0	189.8	248.6	144.8	276.5	97.7	211.5	183.3	236.1	138.4	262.7	91.4	199.6	176.7	223.0	131.9	248.4	85.0
	80	234.8	234.8	261.0	188.8	290.0	142.4	225.4	225.4	249.0	182.5	276.9	136.2	215.6	215.6	236.5	176.1	263.1	129.9	205.3	205.3	223.5	169.5	248.8	123.5
	85	249.0	249.0	262.0	226.4	290.5	180.8	239.3	239.3	250.1	220.2	277.4	174.6	229.2	229.2	237.8	213.8	263.6	168.3	218.6	218.6	225.1	207.3	249.2	161.7
	90	263.3	263.3	263.7	263.7	291.0	218.5	253.3	253.3	254.6	253.1	277.9	212.2	242.9	242.9	243.3	243.3	264.2	205.8	231.9	231.9	232.3	232.3	249.9	199.2
8800	75	237.9	205.8	264.5	156.8	293.8	105.7	226.7	199.5	252.2	150.6	280.3	99.6	215.1	193.0	239.4	144.2	266.1	93.2	202.9	186.3	226.0	137.6	251.5	86.6
	80	242.3	242.3	265.0	197.7	294.1	147.5	232.1	232.1	252.7	191.4	280.6	141.3	221.9	221.9	239.9	184.9	266.6	135.0	211.2	211.2	226.6	178.2	251.9	128.4
	85	256.5	256.5	266.4	238.7	294.7	189.2	246.5	246.5	254.3	232.4	281.0	182.8	235.9	235.9	241.8	226.0	267.0	176.3	224.9	224.9	228.9	219.4	252.4	169.7
	90	271.4	271.4	271.8	271.8	295.2	229.9	261.0	261.0	261.4	261.4	281.8	223.6	250.1	250.1	250.5	250.5	267.9	217.2	238.7	238.7	239.1	239.1	253.4	210.5
9600	75	241.4	215.2	267.8	162.4	297.1	107.4	230.0	208.9	255.3	156.2	283.4	101.2	218.2	202.3	242.2	149.7	269.0	94.8	205.9	195.6	228.4	143.0	254.0	88.2
	80	248.0	248.0	268.4	206.4	297.6	152.5	237.9	237.9	255.9	200.0	283.8	146.2	227.5	227.5	242.8	193.4	269.5	139.8	216.4	216.4	229.3	186.7	254.6	133.2
	85	263.1	263.1	270.3	250.7	298.0	197.1	252.8	252.8	258.1	244.3	284.3	190.7	241.9	241.9	245.5	237.9	270.0	184.1	230.5	230.5	230.7	230.7	255.1	177.4
	90	278.6	278.6	278.9	278.9	298.9	241.1	267.9	267.9	268.3	268.3	285.3	234.7	256.6	256.6	257.0	257.0	271.1	228.2	244.7	244.7	245.1	245.1	256.4	221.5

Notes:

1. All capacities shown are gross and have not considered indoor fan heat. To obtain **NET** cooling capacity subtract indoor fan heat. For indoor fan heat formula, refer to appropriate airflow table notes.
2. MBH = Total Gross Capacity
3. SHC = Sensible Heat Capacity

*For 4000 and 5200 CFM - Unit applications below 320 CFM/Ton are only applicable to TCD models only (No Gas Heat). See below for restrictions:

- Electric heaters restricted on applications below 320 CFM/Ton.
- Dehumidification (Hot Gas Reheat) or TXV with Frostat and Crankcase Heaters are required on applications below 320 CFM/Ton.

Table 20. Gross Cooling Capacities 25 Tons Three Phase Standard Refrigeration System High Efficiency T/YC*301C3,4,W

		Ambient Temperature																							
		85						95						105						115					
Air	Ent	Entering Wet Bulb																							
Flow	DB	61		67		73		61		67		73		61		67		73		61		67		73	
CFM	(F)	MBH	SHC	MBH	SHC	MBH	SHC	MBH	SHC	MBH	SHC	MBH	SHC	MBH	SHC	MBH	SHC	MBH	SHC	MBH	SHC	MBH	SHC	MBH	SHC
9000	75	277	243	306	187	316	117	258	234	295	178	314	115	238	224	276	169	305	110	218	214	253	163	292	104
	80	284	284	307	225	321	169	269	269	295	225	317	161	252	252	277	217	307	158	235	235	254	207	293	151
	85	300	300	309	269	325	198	289	289	298	271	320	202	273	273	280	266	308	201	256	256	259	256	293	198
	90	312	312	313	312	329	236	305	305	305	305	321	240	293	293	293	293	310	245	277	277	277	277	295	244
10000	75	284	258	310	188	319	121	264	249	299	185	316	117	244	239	282	178	308	112	224	224	259	168	295	106
	80	294	294	310	233	323	175	280	280	300	236	319	170	263	263	283	230	309	163	245	245	260	221	296	158
	85	307	307	313	280	327	202	298	298	303	286	322	207	284	284	287	284	312	208	267	267	267	267	297	208
	90	318	318	318	318	331	241	312	312	312	312	324	248	301	301	301	301	314	255	287	287	287	287	299	257
10500	75	286	265	311	190	320	122	267	256	300	189	316	118	247	246	284	182	309	113	228	228	261	172	296	107
	80	297	297	312	237	324	178	285	285	302	241	320	174	267	267	285	237	310	165	249	249	262	227	298	162
	85	310	310	315	285	328	204	302	302	305	293	323	210	289	289	289	289	313	212	272	272	272	272	299	213
	90	320	320	320	320	332	244	314	314	314	314	325	251	305	305	305	305	316	260	292	292	292	292	301	264
11000	75	289	272	312	192	321	123	270	264	302	192	317	119	249	249	286	186	309	114	231	231	263	176	297	108
	80	300	300	313	240	324	181	289	289	304	246	321	177	272	272	287	243	311	170	253	253	265	234	299	165
	85	312	312	316	289	329	205	305	305	307	299	324	212	293	293	293	293	314	215	276	276	276	276	300	217
	90	322	322	321	321	332	246	317	317	317	317	326	255	308	308	308	308	317	265	295	295	295	295	303	270

Notes:

1. All capacities shown are gross and have not considered indoor fan heat. To obtain **NET** cooling capacity subtract indoor fan heat. For indoor fan heat formula, refer to appropriate airflow table notes.
2. MBH = Total Gross Capacity
3. SHC = Sensible Heat Capacity

*Indicates both downflow and horizontal units.

Table 21. Gross Cooling Capacities 25 Tons Three Phase TXV Option High Efficiency T/Y*D301C3,4,W

		Ambient Temperature																							
		85						95						105						115					
Air	Ent	Entering Wet Bulb																							
Flow	DB	61		67		73		61		67		73		61		67		73		61		67		73	
CFM	(F)	MBH	SHC	MBH	SHC	MBH	SHC	MBH	SHC	MBH	SHC	MBH	SHC	MBH	SHC	MBH	SHC	MBH	SHC	MBH	SHC	MBH	SHC	MBH	SHC
5000*	75	241.0	176.5	269.7	142.7	300.9	107.2	229.7	169.7	257.6	135.9	287.8	100.8	217.8	162.6	244.9	129.0	274.0	94.1	205.5	155.3	231.6	122.0	259.8	87.3
	80	241.4	204.6	269.9	170.5	300.9	135.9	230.2	197.7	257.8	163.8	287.8	129.3	218.4	190.5	245.1	156.8	274.1	122.5	206.2	183.2	231.9	149.6	259.8	115.6
	85	243.0	233.0	270.1	198.3	301.1	163.7	229.2	229.2	258.1	191.5	288.1	157.0	221.3	216.5	245.4	184.5	274.4	150.1	209.9	208.3	232.2	177.3	260.1	143.1
	90	251.2	251.2	270.6	226.1	301.4	191.2	241.6	241.6	258.6	219.2	288.3	184.4	231.6	231.6	246.0	212.1	274.6	177.5	221.2	221.2	233.0	204.8	260.4	170.4
6500*	75	256.8	201.4	286.5	157.9	318.8	113.1	244.6	194.3	273.3	150.9	304.2	106.4	231.8	186.9	259.5	143.8	289.2	99.5	218.4	179.4	245.1	136.5	273.6	92.5
	80	258.2	237.2	286.8	193.2	318.9	149.3	246.1	230.1	273.6	186.2	304.4	142.3	233.6	222.8	259.8	179.0	289.4	135.3	220.7	215.4	245.4	171.6	273.9	128.1
	85	264.6	264.6	287.3	228.5	319.2	184.3	254.2	254.2	274.1	221.4	304.7	177.3	243.2	243.2	260.4	214.1	289.7	170.2	231.7	231.7	246.2	206.6	274.1	162.9
	90	279.1	279.1	288.7	263.8	319.5	219.2	268.4	268.4	275.8	256.7	305.0	212.1	257.3	257.3	262.4	249.5	290.0	205.0	245.6	245.6	245.5	245.5	274.5	197.7
8000	75	267.9	224.2	297.7	171.5	330.7	118.0	254.9	216.9	283.7	164.4	315.3	111.1	241.5	209.3	269.2	157.1	299.2	104.0	227.5	201.6	254.0	149.6	282.7	96.8
	80	268.8	268.8	298.0	214.0	330.9	161.1	259.3	255.4	284.1	206.8	315.5	154.0	246.8	246.7	269.6	199.5	299.5	146.7	234.0	234.0	254.5	191.9	283.0	139.4
	85	284.5	284.5	299.2	256.4	331.2	203.2	273.2	273.2	285.4	249.2	315.9	196.1	261.3	261.3	271.0	241.8	299.8	188.8	248.9	248.9	256.2	234.3	283.3	181.4
	90	300.3	300.3	300.2	300.2	331.6	245.2	288.7	288.7	290.5	286.0	316.4	238.0	276.5	276.5	276.4	276.4	300.4	230.6	263.8	263.8	263.7	263.7	284.0	223.1
9000	75	273.6	238.6	303.4	180.1	336.6	120.9	260.4	231.2	289.0	172.8	320.7	114.0	246.7	223.6	273.9	170.7	304.2	106.8	232.5	215.9	258.3	163.2	287.1	99.6
	80	279.6	279.5	303.8	227.0	336.8	168.4	267.3	267.3	289.5	219.8	321.0	161.3	255.2	255.2	274.6	212.4	304.5	154.0	242.6	242.6	259.1	204.8	287.5	146.5
	85	295.1	295.1	305.6	274.3	337.2	215.2	283.4	283.4	291.5	267.1	321.4	208.1	271.0	271.0	276.9	259.7	304.9	200.7	258.0	258.0	261.9	252.2	287.8	193.1
	90	311.9	311.9	311.8	311.8	338.0	261.8	299.6	299.6	299.6	299.6	322.2	254.5	286.9	286.9	286.8	286.8	305.9	247.1	273.5	273.5	273.5	273.5	288.9	239.4
10000	75	278.6	252.6	308.1	188.2	341.5	123.5	265.2	245.2	293.3	180.9	325.3	116.5	251.3	237.6	278.0	173.5	308.4	109.2	234.1	234.1	262.1	165.9	290.8	101.7
	80	287.6	287.6	308.7	239.7	341.8	175.5	275.5	275.5	294.0	232.5	325.6	168.3	263.1	263.1	278.8	225.0	308.7	160.9	250.0	250.0	263.1	217.3	291.2	153.4
	85	304.6	304.6	311.3	291.9	342.1	226.8	292.3	292.3	297.0	284.7	325.9	219.5	279.4	279.4	279.3	279.3	309.1	212.1	266.0	266.0	267.7	262.9	291.7	204.4
	90	322.2	322.2	322.1	322.1	343.3	277.9	309.3	309.3	309.3	309.3	327.2	270.5	295.9	295.9	295.9	295.9	310.6	263.1	282.0	282.0	282.0	282.0	293.3	255.3
11000	75	283.1	266.2	312.0	196.0	345.5	125.9	269.5	258.8	296.9	188.7	329.1	118.9	253.1	253.1	281.2	181.2	311.8	111.5	241.4	237.4	265.1	173.5	293.9	104.0
	80	295.1	295.1	312.9	252.1	345.8	182.3	282.8	282.8	297.9	244.7	329.4	175.0	269.9	269.9	282.4	237.2	312.2	167.7	256.4	256.4	266.5	229.4	294.3	160.1
	85	312.9	312.9	312.8	312.8	346.2	237.9	300.0	300.0	299.9	299.9	329.9	230.6	286.7	286.7	288.1	285.2	312.8	223.1	272.8	272.8	272.7	272.7	295.0	215.4
	90	331.2	331.2	331.1	331.1	347.8	293.5	317.8	317.8	317.8	317.8	331.6	286.2	304.0	304.0	303.8	303.8	314.7	278.6	289.3	289.3	289.3	289.3	297.3	271.0
12000	75	283.8	283.8	315.3	203.6	348.9	128.2	271.5	271.5	299.9	196.2	332.2	121.1	259.9	256.8	284.1	188.6	314.7	113.8	245.2	245.2	267.7	180.9	296.5	106.2
	80	301.8	301.8	316.6	264.1	349.2	188.9	289.0	289.0	301.2	256.6	332.6	181.7	275.9	275.9	285.7	249.1	315.2	174.3	262.0	262.0	269.5	241.3	297.0	166.6
	85	320.3	320.3	322.4	316.7	349.8	248.8	307.0	307.0	308.0	306.9	333.2	241.5	293.2	293.2	293.1	293.1	315.8	233.9	278.8	278.8	278.8	278.8	297.8	226.2
	90	339.1	339.1	339.0	339.0	351.7	308.8	325.4	325.4	325.3	325.3	335.6	301.5	310.9	310.9	310.9	310.9	318.5	294.0	295.9	295.9	295.9	295.9	301.0	286.4

Notes:

1. All capacities shown are gross and have not considered indoor fan heat. To obtain **NET** cooling capacity subtract indoor fan heat. For indoor fan heat formula, refer to appropriate airflow table notes.
2. MBH = Total Gross Capacity
3. SHC = Sensible Heat Capacity

*For 5000 and 6500 CFM - Unit applications below 320 CFM/Ton are only applicable to TCD models only (No Gas Heat). See below for restrictions:

- Electric heaters restricted on applications below 320 CFM/Ton.
- Dehumidification (Hot Gas Reheat) or TXV with Frostat and Crankcase Heaters are required on applications below 320 CFM/Ton.

Performance Data

Table 22. Evaporator Fan Performance 12½ Tons with Optional Electric Heat TC*150D Downflow or Horizontal

	External Static Pressure (Inches of Water)																			
	.10		.20		.30		.40		.50		.60		.70		.80		.90		1.00	
CFM	RPM	BHP	RPM	BHP	RPM	BHP	RPM	BHP	RPM	BHP	RPM	BHP	RPM	BHP	RPM	BHP	RPM	BHP	RPM	BHP
	3-HP Standard Motor & Field Supplied Low Static Drive[i]										**3-HP Standard Motor & Sheaves**									
4000	—	—	—	—	—	—	565	0.93	599	1.03	632	1.15	663	1.27	695	1.38	727	1.48	757	1.59
4500	—	—	—	—	571	1.10	603	1.21	634	1.31	665	1.43	694	1.56	723	1.69	750	1.82	778	1.94
5000	547	1.18	581	1.30	613	1.42	643	1.54	672	1.67	700	1.78	727	1.91	755	2.05	781	2.19	806	2.34
5500	595	1.55	627	1.68	656	1.81	685	1.94	711	2.08	737	2.21	763	2.34	788	2.47	813	2.62	837	2.77
6000	643	1.99	673	2.12	701	2.26	727	2.41	752	2.56	777	2.71	801	2.85	825	2.99	848	3.13	871	3.27

Continued

	External Static Pressure (Inches of Water)																			
	1.10		1.20		1.30		1.40		1.50		1.60		1.70		1.80		1.90		2.00	
CFM	RPM	BHP	RPM	BHP	RPM	BHP	RPM	BHP	RPM	BHP	RPM	BHP	RPM	BHP	RPM	BHP	RPM	BHP	RPM	BHP
	3 HP Standard Motor & Sheaves						**3 HP Standard Motor & High Static Drive Accessory**													
4000	786	1.70	813	1.81	841	1.91	867	2.02	893	2.12	919	2.22	943	2.32	966	2.41	989	2.50	1011	2.60
4500	806	2.06	834	2.19	861	2.31	886	2.43	911	2.56	935	2.67	960	2.79	983	2.90	1005	3.02	1028	3.13
5000	830	2.48	856	2.62	882	2.76	907	2.89	931	3.02	955	3.16	977	3.30	1001	3.44	1022	3.56	1045	3.70
5500	861	2.93	884	3.10	906	3.25	930	3.41	953	3.56	976	3.70	999	3.86	1021	4.00	1043	4.15	1064	4.31
6000	894	3.43	916	3.61	938	3.79	959	3.97	980	4.15	1000	4.31	1019	4.46	1040	4.62	1061	4.78	1082	4.95
			5-HP Oversized Motor & Sheaves										**5-HP Oversized Motor & Field Supplied Drive[ii]**							

For Standard Evaporator Fan Speed (RPM), reference Table 50.
For Oversized Evaporator Fan Speed (RPM), reference Table 53.
Fan motor heat (MBH) = 3.15 x Fan BHP.
Notes:
Data includes pressure drop due to standard filters and wet coils. No accessories or options are included in pressure drop data. Refer to Table 54 to determine additional static pressure drop due to other options/accessories.
Factory supplied motors, in commercial equipment, are definite purpose motors, specifically designed and tested to operate reliably and continuously at all cataloged conditions. Using the full horsepower range of our fan motors as shown in our tabular data will not result in nuisance tripping or premature motor failure. Our product's warranty will not be affected.

(i) Field Supplied Fan Sheave BK90 required. Field Supplied Belt may be necessary.
(ii) 5-HP Oversized Motor with Field Supplied Motor Sheave IVL40 required. Field Supplied Belt may be necessary.
*For 380V/60 Hz units, the oversized motor is used as the standard motor. Refer to "Motor & Sheave/Fan Speed" tables to determine operating range.

Table 23. Evaporator Fan Performance 12½ Tons with Gas Heat YC*150D Downflow or Horizontal

	External Static Pressure (Inches of Water)																			
	.10		.20		.30		.40		.50		.60		.70		.80		.90		1.00	
CFM	RPM	BHP	RPM	BHP	RPM	BHP	RPM	BHP	RPM	BHP	RPM	BHP	RPM	BHP	RPM	BHP	RPM	BHP	RPM	BHP
	3-HP Standard Motor & Field Supplied Low Static Drive(i)										**3-HP Standard Motor & Drive**									
4000	—	—	—	—	—	—	581	0.97	614	1.08	646	1.20	677	1.31	707	1.41	738	1.52	768	1.63
4500	—	—	—	—	588	1.15	622	1.27	652	1.38	682	1.50	711	1.63	738	1.76	766	1.88	793	2.00
5000	571	1.26	602	1.37	631	1.46	663	1.63	693	1.75	720	1.87	747	2.00	773	2.15	798	2.29	823	2.43
5500	621	1.65	650	1.79	678	1.87	704	2.01	734	2.19	760	2.33	786	2.45	810	2.59	834	2.74	858	2.91
6000	674	2.10	699	2.28	727	2.37	749	2.48	775	2.66	802	2.86	826	3.00	849	3.13	872	3.28	894	3.44

Continued

	External Static Pressure (Inches of Water)																			
	1.10		1.20		1.30		1.40		1.50		1.60		1.70		1.80		1.90		2.00	
CFM	RPM	BHP	RPM	BHP	RPM	BHP	RPM	BHP	RPM	BHP	RPM	BHP	RPM	BHP	RPM	BHP	RPM	BHP	RPM	BHP
	3-HP Standard Motor & Drive								**3-HP Standard Motor & High Static Drive Accessory(ii)**											
4000	799	1.75	829	1.87	856	1.99	884	2.11	911	2.24	937	2.35	962	2.47	987	2.59	1010	2.70	1034	2.82
4500	820	2.12	847	2.24	873	2.36	900	2.50	927	2.64	952	2.77	978	2.91	1003	3.05	1025	3.18	1049	3.32
5000	847	2.56	873	2.70	897	2.83	921	2.96	945	3.09	970	3.24	993	3.38	1017	3.53	1041	3.69	1064	3.85
5500	881	3.06	903	3.22	926	3.37	948	3.52	971	3.67	993	3.80	1015	3.95	1036	4.09	1058	4.25	1081	4.41
6000	916	3.61	938	3.78	959	3.96	980	4.13	1001	4.31	1021	4.46	1042	4.62	1062	4.78	1082	4.93	1103	5.09
	5-HP Oversized Motor & Drive(iii)										**5-HP Oversized Motor & Field Supplied High Static Drive(iv)**									

For Standard Evaporator Fan Speed (RPM), reference Table 50.
For Oversized Evaporator Fan Speed (RPM), reference Table 53.
Fan motor heat (MBH) = 3.15 x Fan BHP.
Notes:
Data includes pressure drop due to standard filters and wet coils. No accessories or options are included in pressure drop data.
Refer to Table 54 to determine additional static pressure drop due to other options/accessories.
Fan motor heat (MBH) = 3.15xFan BHP.
Motor Heat (MBH) = 3.000 x Fan BHP+.5000 Factory supplied motors, in commercial equipment, are definite purpose motors, specifically designed and tested to operate reliably and continuously at all cataloged conditions. Using the full horsepower range of our fan motors as shown in our tabular data will not result in nuisance tripping or premature motor failure. Our product's warranty will not be affected.

(i) Field Supplied Fan Sheave BK90 required. Field Supplied Belt may be necessary.
(ii) 3-HP Standard Motor with Field Supplied Motor Sheave 1VP44 required. Field Supplied Belt may be necessary.
(iii) 5-HP Oversize Motor with Field Supplied Motor Sheave 1VP50 required. Field Supplied Belt may be necessary.
(iv) 5-HP Oversize Motor with Field Supplied Motor Sheave 1VP50 required. Field Supplied Belt may be necessary.
*For 380V/60 Hz units, the oversized motor is used as the standard motor. Refer to "Motor & Sheave/Fan Speed" tables to determine operating range.

Table 24. Evaporator Fan Performance 15 Tons with Optional Electric Heat TC*180B Downflow or Horizontal

	External Static Pressure (Inches of Water)																			
	.10		.20		.30		.40		.50		.60		.70		.80		.90		1.00	
CFM	RPM	BHP	RPM	BHP	RPM	BHP	RPM	BHP	RPM	BHP	RPM	BHP	RPM	BHP	RPM	BHP	RPM	BHP	RPM	BHP
	3-HP Standard Motor & Field Supplied Low Static Drive(i)										**3-HP Standard Motor & Sheaves**									
4800	—	—	563	1.17	596	1.29	626	1.41	656	1.52	685	1.63	714	1.76	742	1.90	768	2.04	794	2.18
5400	585	1.47	618	1.60	648	1.72	676	1.86	703	1.99	729	2.12	756	2.25	782	2.38	807	2.52	832	2.68
6000	643	1.99	673	2.12	701	2.26	727	2.41	752	2.56	777	2.71	801	2.85	825	2.99	848	3.13	871	3.27
6600	701	2.61	729	2.76	755	2.91	780	3.07	804	3.23	827	3.39	849	3.56	871	3.72	892	3.88	914	4.03
7200	760	3.35	786	3.52	810	3.69	834	3.85	856	4.02	878	4.20	899	4.38	919	4.56	939	4.74	959	4.91
	5-HP Oversized Motor & Field Supplied Fan Sheave(ii)												**5-HP Oversized Motor & Sheaves**							

Continued

	External Static Pressure (Inches of Water)																			
	1.10		1.20		1.30		1.40		1.50		1.60		1.70		1.80		1.90		2.00	
CFM	RPM	BHP	RPM	BHP	RPM	BHP	RPM	BHP	RPM	BHP	RPM	BHP	RPM	BHP	RPM	BHP	RPM	BHP	RPM	BHP
	3-HP Standard Motor & Sheaves						**3-HP Standard Motor & High Static Drive Accessory**													
4800	819	2.30	844	2.43	871	2.57	898	2.70	923	2.83	946	2.96	970	3.09	994	3.23	1018	3.39	1041	3.54
5400	855	2.84	878	3.00	901	3.15	923	3.29	945	3.43	969	3.58	993	3.73	1016	3.88	1038	4.03	1060	4.17
6000	894	3.43	916	3.61	938	3.79	959	3.97	980	4.15	1000	4.31	1019	4.46	1040	4.62	1061	4.78	1082	4.95
6600	935	4.18	956	4.34	977	4.51	997	4.70	1018	4.90	1037	5.10	1056	5.30	1075	5.49	1093	5.67	—	—
7200	979	5.08	999	5.25	1018	5.41	1038	5.58	1057	5.77	—	—	—	—	—	—	—	—	—	—
	5-HP Oversized Motor & Sheaves										**5-HP Oversized Motor & Field Supplied Drive(iii)**									

For Standard Evaporator Fan Speed (RPM), reference Table 50.
For Standard Motor & High Static Drive Accessory Fan Speed (RPM), reference Table 52.
For Oversized Evaporator Fan Speed (RPM), reference Table 53.
Fan motor heat (MBH) = 3.15 x Fan BHP.
Notes:
Data includes pressure drop due to standard filters and wet coils. No accessories or options are included in pressure drop data.
Refer to Table 54 to determine additional static pressure drop due to other options/accessories.
Factory supplied motors, in commercial equipment, are definite purpose motors, specifically designed and tested to operate reliably and continuously at all cataloged conditions. Using the full horsepower range of our fan motors as shown in our tabular data will not result in nuisance tripping or premature motor failure. Our product's warranty will not be affected.

(i) Field Supplied Fan Sheave BK105 required. Field Supplied Belt may be necessary.
(ii) 5-HP Oversized Motor with Field Supplied Fan Sheave BK160 required. Field Supplied Belt may be necessary.
(iii) 5-HP Oversized Motor with Field Supplied Motor Sheave IVP50 required. Field Supplied Belt may be necessary.
*For 380V/60 Hz units, the oversized motor is used as the standard motor. Refer to "Motor & Sheave/Fan Speed" tables to determine operating range.

Table 25. Evaporator Fan Performance 15 Tons with Gas Heat YC*180B Downflow or Horizontal

	External Static Pressure (Inches of Water)																			
	.10		.20		.30		.40		.50		.60		.70		.80		.90		1.00	
CFM	RPM	BHP	RPM	BHP	RPM	BHP	RPM	BHP	RPM	BHP	RPM	BHP	RPM	BHP	RPM	BHP	RPM	BHP	RPM	BHP
	3-HP Standard Motor & Field Supplied Low Static Drive(i)										**3-HP Standard Motor & Sheaves**									
4800	—	—	584	1.22	613	1.33	647	1.49	676	1.59	704	1.71	732	1.84	759	1.98	485	2.13	811	2.26
5200	591	1.41	623	1.53	649	1.61	679	1.78	709	1.93	736	2.04	762	2.17	788	2.31	831	2.46	837	2.62
5600	633	1.76	661	1.89	688	1.96	713	2.09	742	2.29	769	2.43	793	2.55	817	2.69	542	2.84	865	3.00
6000	674	2.10	699	2.28	727	2.37	749	2.48	775	2.66	802	2.86	826	3.00	849	3.13	872	3.28	894	3.44
6400	716	2.52	739	2.73	766	2.85	788	2.94	809	3.08	835	3.30	860	3.50	882	3.65	903	3.79	925	3.94
6800	758	3.00	779	3.22	804	3.38	827	3.47	847	3.58	868	3.77	892	4.01	915	4.21	936	4.37	957	4.52
7200	800	3.54	820	3.76	842	3.96	866	4.07	885	4.17	904	4.32	925	4.54	948	4.81	970	5.01	990	5.17
	5-HP Oversized Motor & Drive																			

Continued

	External Static Pressure (Inches of Water)																			
	1.10		1.20		1.30		1.40		1.50		1.60		1.70		1.80		1.90		2.00	
CFM	RPM	BHP	RPM	BHP	RPM	BHP	RPM	BHP	RPM	BHP	RPM	BHP	RPM	BHP	RPM	BHP	RPM	BHP	RPM	BHP
	3-HP Standard Motor & Drive						**3-HP Standard Motor & High Static Drive Accessory**													
4800	836	2.38	862	2.51	887	2.64	912	2.77	937	2.90	962	3.04	987	3.19	1011	3.34	1034	3.49	1057	3.65
5200	861	2.76	885	2.90	908	3.04	932	3.18	955	3.31	978	3.46	1002	3.60	1025	3.75	1047	3.90	1070	4.06
5600	888	3.17	910	3.33	932	3.49	954	3.64	976	3.79	998	3.93	1020	4.08	1042	4.23	1063	4.38	1085	4.54
6000	916	3.61	938	3.78	959	3.96	980	4.13	1001	4.31	1021	4.46	1042	4.62	1062	4.78	1082	4.93	1103	5.09
6400	946	4.10	967	4.28	987	4.47	1007	4.66	1027	4.85	1047	5.03	1066	5.21	1085	5.38	1104	5.55	—	—
6800	977	4.67	997	4.84	1017	5.03	1036	5.22	1055	5.42	1074	5.62	—	—	—	—	—	—	—	—
7200	1009	5.33	1028	5.49	1047	5.67	—	—	—	—	—	—	—	—	—	—	—	—	—	—
	5-HP Oversized Motor & Drive						**5-HP Oversized Motor & Field Supplied High Static Drive(ii)**													

For Standard Evaporator Fan Speed (RPM), reference Table 50.
For Standard Motor & High Static Drive Accessory Fan Speed (RPM), reference Table 52.
For Oversized Evaporator Fan Speed (RPM), reference Table 53.
Fan motor heat (MBH) = 3.15 x Fan BHP.
Notes:
Data includes pressure drop due to standard filters and wet coils. No accessories or options are included in pressure drop data.
Refer to Table 54 to determine additional static pressure drop due to other options/accessories.
Factory supplied motors, in commercial equipment, are definite purpose motors, specifically designed and tested to operate reliably and continuously at all cataloged conditions. Using the full horsepower range of our fan motors as shown in our tabular data will not result in nuisance tripping or premature motor failure. Our product's warranty will not be affected.

(i) Field Supplied Fan Sheave BK105 required. Field Supplied Belt may be necessary.
(ii) 5-HP Oversize Motor with Field Supplied Motor Sheave 1VP50 required. Field Supplied Belt may be necessary.
*For 380V/60 Hz units, the oversized motor is used as the standard motor. Refer to "Motor & Sheave/Fan Speed" tables to determine operating range.

Table 26. Evaporator Fan Performance 17½ Tons with Optional Electric Heat TC*210C Downflow or Horizontal

	External Static Pressure (Inches of Water)																			
	.10		.20		.30		.40		.50		.60		.70		.80		.90		1.00	
CFM	RPM	BHP	RPM	BHP	RPM	BHP	RPM	BHP	RPM	BHP	RPM	BHP	RPM	BHP	RPM	BHP	RPM	BHP	RPM	BHP
	5-HP Standard Motor with Low Static Drive Accessory														**5-HP Standard Motor & Sheaves**					
5600	—	—	—	—	735	2.34	759	2.46	783	2.60	807	2.74	830	2.89	852	3.03	875	3.18	898	3.33
6300	765	2.96	788	3.10	810	3.23	831	3.36	852	3.50	874	3.65	895	3.81	917	3.97	937	4.13	956	4.29
7000	845	4.02	866	4.18	886	4.33	906	4.48	925	4.62	944	4.77	963	4.93	982	5.10	1002	5.29	1021	5.47
7700	925	5.32	944	5.49	963	5.66	982	5.82	999	5.98	1016	6.14	1033	6.30	1050	6.47	1069	6.66	1086	6.86
8400	1006	6.87	1024	7.06	1041	7.24	1058	7.42	1075	7.60	1091	7.78	1107	7.95	1122	8.13	1138	8.31	1154	8.50
	7.5-HP Oversized Motor & Sheaves																			

Continued

	External Static Pressure (Inches of Water)																			
	1.10		1.20		1.30		1.40		1.50		1.60		1.70		1.80		1.90		2.00	
CFM	RPM	BHP	RPM	BHP	RPM	BHP	RPM	BHP	RPM	BHP	RPM	BHP	RPM	BHP	RPM	BHP	RPM	BHP	RPM	BHP
	5-HP Standard Motor & Sheaves																			
5600	923	3.50	946	3.68	968	3.85	989	4.03	1011	4.21	1033	4.39	1056	4.58	1078	4.77	1099	4.96	1122	5.18
6300	976	4.46	997	4.63	1019	4.82	1040	5.00	1060	5.19	1079	5.39	1100	5.60	1118	5.79	1138	6.00	1157	6.20
7000	1039	5.65	1057	5.82	1074	6.00	1092	6.19	1111	6.39	1130	6.59	1150	6.80	1168	7.01	1186	7.22	1205	7.46
7700	1104	7.06	1122	7.26	1138	7.46	1154	7.66	1170	7.84	1186	8.05	1202	8.25	1220	8.47	—	—	—	—
8400	—	—	—	—	—	—	—	—	—	—	—	—	—	—	—	—	—	—	—	—
	7.5-HP Oversized Motor Sheaves																			

For Standard Evaporator Fan Speed (RPM), reference Table 50.
For Standard Motor & Low Static Drive Accessory Fan Speed (RPM), reference Table 51.
For Oversized Evaporator Fan Speed (RPM), reference Table 53.
Fan motor heat (MBH) = 3.15 x Fan BHP.
Notes:
Data includes pressure drop due to standard filters and wet coils. No accessories or options are included in pressure drop data.
Refer to Table 54 to determine additional static pressure drop due to other options/accessories.
Factory supplied motors, in commercial equipment, are definite purpose motors, specifically designed and tested to operate reliably and continuously at all cataloged conditions. Using the full horsepower range of our fan motors as shown in our tabular data will not result in nuisance tripping or premature motor failure. Our product's warranty will not be affected.
*For 380V/60 Hz units, the oversized motor is used as the standard motor. Refer to "Motor & Sheave/Fan Speed" tables to determine operating range.

Table 27. Evaporator Fan Performance 17½ Tons with Gas Heat YC*210C Downflow or Horizontal

	External Static Pressure (Inches of Water)																			
	.10		.20		.30		.40		.50		.60		.70		.80		.90		1.00	
CFM	RPM	BHP	RPM	BHP	RPM	BHP	RPM	BHP	RPM	BHP	RPM	BHP	RPM	BHP	RPM	BHP	RPM	BHP	RPM	BHP
	5-HP Standard Motor & Low Static Drive Accessory														**5-HP Standard Motor & Drive**					
5600	—	—	720	2.27	744	2.39	767	2.51	791	2.65	815	2.79	838	2.93	860	3.08	883	3.23	906	3.39
6300	776	3.02	798	3.16	820	3.29	841	3.42	862	3.56	883	3.72	905	3.88	926	4.04	946	4.20	965	4.36
7000	857	4.11	878	4.26	898	4.41	917	4.56	935	4.70	954	4.86	974	5.03	993	5.21	1013	5.39	1031	5.57
7700	939	5.44	958	5.60	976	5.77	994	5.93	1011	6.09	1028	6.25	1045	6.42	1062	6.60	1080	6.79	1098	6.99
8400	1021	7.03	1038	7.21	1055	7.39	1072	7.57	1088	7.74	1104	7.92	1119	8.09	1135	8.27	1151	8.46	—	—
	7.5-HP Oversized Motor & Drive																			

Continued

	External Static Pressure (Inches of Water)																			
	1.10		1.20		1.30		1.40		1.50		1.60		1.70		1.80		1.90		2.00	
CFM	RPM	BHP	RPM	BHP	RPM	BHP	RPM	BHP	RPM	BHP	RPM	BHP	RPM	BHP	RPM	BHP	RPM	BHP	RPM	BHP
	5-HP Standard Motor & Drive																			
5600	929	3.55	951	3.72	974	3.90	996	4.08	1018	4.27	1039	4.45	1060	4.62	1082	4.81	1105	5.01	1127	5.22
6300	984	4.53	1005	4.70	1026	4.88	1047	5.07	1067	5.27	1087	5.46	1106	5.66	1125	5.86	1145	6.07	1164	6.27
7000	1049	5.74	1066	5.92	1084	6.11	1102	6.30	1121	6.49	1139	6.69	1159	6.90	1176	7.11	1194	7.33	1212	7.55
7700	1116	7.20	1132	7.39	1149	7.59	1164	7.78	1180	7.98	1197	8.18	1213	8.39	1230	8.60	—	—	—	—
8400	—	—	—	—	—	—	—	—	—	—	—	—	—	—	—	—	—	—	—	—
	7.5-HP Oversized Motor & Drive																			

For Standard Evaporator Fan Speed (RPM), reference Table 50
For Standard Motor & Low Static Drive Accessory Fan Speed (RPM), reference Table 51.
For Oversized Evaporator Fan Speed (RPM), reference Table 53.
Fan motor heat (MBH) = 3.15 x Fan BHP.
Notes:
Data includes pressure drop due to standard filters and wet coils. No accessories or options are included in pressure drop data.
Refer to Table 54 to determine additional static pressure drop due to other options/accessories.
Factory supplied motors, in commercial equipment, are definite purpose motors, specifically designed and tested to operate reliably and continuously at all cataloged conditions. Using the full horsepower range of our fan motors as shown in our tabular data will not result in nuisance tripping or premature motor failure. Our product's warranty will not be affected.
*For 380V/60 Hz units, the oversized motor is used as the standard motor. Refer to "Motor & Sheave/Fan Speed" tables to determine operating range.

Table 28. Evaporator Fan Performance 20 Tons with Optional Electric Heat TC*240B Downflow or Horizontal

	External Static Pressure (Inches of Water)																			
	.10		.20		.30		.40		.50		.60		.70		.80		.90		1.00	
CFM	RPM	BHP	RPM	BHP	RPM	BHP	RPM	BHP	RPM	BHP	RPM	BHP	RPM	BHP	RPM	BHP	RPM	BHP	RPM	BHP
	5-HP Standard Motor with Low Static Drive[i]										**5-HP Standard Motor & Sheaves**									
6400	—	—	514	1.69	546	1.88	574	2.05	599	2.21	624	2.37	648	2.54	671	2.71	695	2.90	720	3.11
7200	527	2.08	562	2.29	592	2.50	619	2.71	644	2.91	667	3.09	689	3.26	711	3.45	732	3.64	752	3.83
8000	578	2.79	610	3.03	639	3.26	666	3.50	690	3.73	712	3.96	733	4.16	753	4.35	773	4.55	792	4.75
8800	629	3.65	659	3.93	687	4.18	712	4.43	736	4.69	758	4.96	778	5.20	797	5.43	816	5.65	834	5.86
9600	681	4.67	709	4.99	735	5.27	759	5.54	782	5.82	804	6.11	824	6.39	843	6.67	861	6.92	878	7.16
						7.5-HP Standard Motor & Sheave[ii]							**7.5-HP Oversized Motor & Sheaves**							

Continued

	External Static Pressure (Inches of Water)																			
	1.10		1.20		1.30		1.40		1.50		1.60		1.70		1.80		1.90		2.00	
CFM	RPM	BHP	RPM	BHP	RPM	BHP	RPM	BHP	RPM	BHP	RPM	BHP	RPM	BHP	RPM	BHP	RPM	BHP	RPM	BHP
	5-HP Standard Motor & Sheaves										**5-HP Standard Motor & High Static Drive Accessory**									
6400	744	3.32	768	3.52	790	3.72	811	3.91	833	4.13	855	4.36	877	4.59	897	4.82	917	5.05	936	5.29
7200	773	4.04	795	4.27	817	4.50	839	4.74	860	4.96	880	5.19	898	5.41	917	5.64	937	5.88	957	6.14
8000	811	4.96	830	5.18	848	5.40	867	5.64	887	5.90	907	6.16	927	6.42	946	6.68	964	6.93	982	7.18
8800	852	6.08	869	6.30	887	6.53	904	6.77	921	7.01	938	7.26	955	7.52	973	7.81	991	8.09	—	—
9600	895	7.40	911	7.63	928	7.86	944	8.11	960	8.36	976	8.61	—	—	—	—	—	—	—	—
	7.5-HP Oversized Motor & Sheaves																			

For Standard Evaporator Fan Speed (RPM), reference Table 50.
For Standard Motor & Low Static Drive Accessory Fan Speed (RPM), reference Table 51.
For Oversized Evaporator Fan Speed (RPM), reference Table 53.
Fan motor heat (MBH) = 3.15 x Fan BHP.
Notes:
Data includes pressure drop due to standard filters and wet coils. No accessories or options are included in pressure drop data.
Refer to Table 54 to determine additional static pressure drop due to other options/accessories.
Factory supplied motors, in commercial equipment, are definite purpose motors, specifically designed and tested to operate reliably and continuously at all cataloged conditions. Using the full horsepower range of our fan motors as shown in our tabular data will not result in nuisance tripping or premature motor failure. Our product's warranty will not be affected.

[i] Field Supplied Fan Sheave BK190 required. Field Supplied Belt may be necessary.
[ii] 7.5 HP Standard Motor with Field Supplied Motor Sheave IVP50 required. Field Supplied Belt may be necessary.
*For 380V/60 Hz units, the oversized motor is used as the standard motor. Refer to "Motor & Sheave/Fan Speed" tables to determine operating range.

Table 29. Evaporator Fan Performance 20 Tons with Gas Heat YC*240B Downflow or Horizontal

	External Static Pressure (Inches of Water)																			
	.10		.20		.30		.40		.50		.60		.70		.80		.90		1.00	
CFM	RPM	BHP	RPM	BHP	RPM	BHP	RPM	BHP	RPM	BHP	RPM	BHP	RPM	BHP	RPM	BHP	RPM	BHP	RPM	BHP
	5-HP Standard Motor & Field Supplied Low Static Drive(i)										**5-HP Standard Motor & Drive**									
6400	511	1.56	538	1.72	564	1.99	590	2.16	615	2.31	639	2.47	663	2.65	688	2.84	711	3.04	735	3.23
7200	555	2.25	587	2.46	614	2.67	640	2.88	663	3.06	685	3.23	706	3.41	728	3.60	749	3.80	771	4.01
8000	609	3.03	639	3.26	665	3.50	690	3.73	712	3.96	733	4.16	753	4.35	772	4.55	792	4.75	811	4.96
8800	664	3.98	692	4.23	717	4.49	740	4.75	762	5.01	782	5.25	801	5.48	820	5.69	838	5.90	855	6.12
9600	719	5.11	745	5.38	770	5.66	792	5.94	813	6.23	832	6.51	851	6.78	869	7.03	886	7.27	902	7.50
						7.5-HP Oversized Motor & Sheave(ii)										**7.5-HP Oversized Motor & Drive**				

Continued

	External Static Pressure (Inches of Water)																			
	1.10		1.20		1.30		1.40		1.50		1.60		1.70		1.80		1.90		2.00	
CFM	RPM	BHP	RPM	BHP	RPM	BHP	RPM	BHP	RPM	BHP	RPM	BHP	RPM	BHP	RPM	BHP	RPM	BHP	RPM	BHP
	5-HP Standard Motor & Drive								**5-HP Standard Motor & High Static Drive Accessory**											
6400	758	3.4	781	3.64	804	3.85	827	4.07	848	4.29	869	4.51	890	4.73	910	4.97	929	5.21	949	5.45
7200	792	4.24	813	4.46	834	4.68	854	4.90	875	5.13	895	5.37	916	5.62	936	5.86	955	6.11	973	6.35
8000	830	5.18	850	5.42	869	5.66	888	5.91	907	6.16	925	6.40	944	6.65	962	6.90	981	7.16	1000	7.44
8800	873	6.34	890	6.58	908	6.82	925	7.08	943	7.34	961	7.61	978	7.88	995	8.16	—	—	—	—
9600	919	7.73	935	7.97	951	8.21	967	8.46	—	—	—	—	—	—	—	—	—	—	—	—
	7.5-HP Oversized Motor & Drive																			

For Standard Evaporator Fan Speed (RPM), reference Table 50.
For Standard Motor & Low Static Drive Accessory Fan Speed (RPM), reference Table 51.
For Oversized Evaporator Fan Speed (RPM), reference Table 53.
Fan motor heat (MBH) = 3.15 x Fan BHP.
Notes:
Data includes pressure drop due to standard filters and wet coils. No accessories or options are included in pressure drop data.
Refer to Table 54 to determine additional static pressure drop due to other options/accessories.
Factory supplied motors, in commercial equipment, are definite purpose motors, specifically designed and tested to operate reliably and continuously at all cataloged conditions. Using the full horsepower range of our fan motors as shown in our tabular data will not result in nuisance tripping or premature motor failure. Our product's warranty will not be affected.

(i) Field Supplied Fan Sheave BK190 required. Field Supplied Belt may be necessary.
(ii) 7.5 HP Standard Motor with Field Supplied Motor Sheave IVP50 required. Field Supplied Belt may be necessary.
*For 380V/60 Hz units, the oversized motor is used as the standard motor. Refer to "Motor & Sheave/Fan Speed" tables to determine operating range.

Table 30. Evaporator Fan Performance 25 Tons with Optional Electric Heat TC*300B Downflow or Horizontal

	External Static Pressure (Inches of Water)																			
	.10		.20		.30		.40		.50		.60		.70		.80		.90		1.00	
CFM	RPM	BHP	RPM	BHP	RPM	BHP	RPM	BHP	RPM	BHP	RPM	BHP	RPM	BHP	RPM	BHP	RPM	BHP	RPM	BHP
	7.5-HP Standard Motor & Low Static Drive Accessory														**7.5-HP Standard Motor & Sheaves**					
7000	—	—	—	—	593	2.42	619	2.62	643	2.80	667	2.98	690	3.16	712	3.35	733	3.53	754	3.73
7500	—	—	595	2.66	624	2.88	649	3.10	673	3.31	695	3.50	717	3.68	738	3.88	759	4.08	779	4.28
8000	595	2.92	627	3.16	655	3.39	679	3.63	702	3.86	724	4.07	745	4.28	766	4.48	786	4.68	805	4.90
8500	628	3.47	659	3.73	686	3.97	710	4.23	732	4.47	754	4.71	774	4.94	794	5.15	813	5.36	832	5.58
9000	661	4.08	691	4.36	717	4.62	741	4.89	763	5.15	784	5.41	803	5.66	822	5.89	841	6.12	859	6.35
9500	695	4.76	723	5.06	749	5.34	772	5.62	794	5.90	814	6.18	833	6.45	852	6.71	870	6.95	887	7.19
10000	729	5.52	755	5.84	781	6.13	804	6.42	825	6.72	844	7.01	863	7.31	881	7.59	899	7.86	916	8.11
10500	762	6.35	788	6.69	812	7.00	835	7.31	856	7.62	875	7.93	894	8.24	911	8.54	—	—	—	—
11000	796	7.27	821	7.63	844	7.96	867	8.3	887	8.60	—	—	—	—	—	—	—	—	—	—
											7.5-HP Standard Motor & High Static Drive Accessory									

Continued

	External Static Pressure (Inches of Water)									
	1.10		1.20		1.30		1.40		1.50	
CFM	RPM	BHP	RPM	BHP	RPM	BHP	RPM	BHP	RPM	BHP
	7.5-HP Standard Motor & Sheaves									
7000	776	3.95	798	4.18	820	4.40	841	4.62	862	4.84
7500	798	4.48	818	4.71	839	4.95	860	5.19	880	5.42
8000	824	5.11	842	5.32	860	5.55	880	5.80	899	6.06
8500	850	5.81	868	6.03	885	6.26	902	6.49	920	6.74
9000	877	6.58	894	6.81	911	7.05	928	7.29	944	7.53
9500	904	7.43	921	7.67	938	7.92	954	8.17	970	8.42
10000	933	8.36	949	8.62	—	—	—	—	—	—
10500	—	—	—	—	—	—	—	—	—	—
11000	—	—	—	—	—	—	—	—	—	—
	7.5-HP Standard Motor & High Static Drive Accessory									

For Standard Evaporator Fan Speed (RPM), reference Table 50.
For Standard Motor & Low Static Drive Accessory Fan Speed (RPM), reference Table 51.
For Oversized Evaporator Fan Speed (RPM), reference Table 53.
Fan motor heat (MBH) = 3.15 x Fan BHP.
Notes:
Data includes pressure drop due to standard filters and wet coils.
No accessories or options are included in pressure drop data. Refer to Table 54 to determine additional static pressure drop due to other options/accessories.
Factory supplied motors, in commercial equipment, are definite purpose motors, specifically designed and tested to operate reliably and continuously at all cataloged conditions. Using the full horsepower range of our fan motors as shown in our tabular data will not result in nuisance tripping or premature motor failure. Our product's warranty will not be affected.
*For 380V/60 Hz units, the oversized motor is used as the standard motor. Refer to "Motor & Sheave/Fan Speed" tables to determine operating range.

Table 31. Evaporator Fan Performance 25 Tons with Gas Heat YC*300B Downflow or Horizontal

	External Static Pressure (Inches of Water)																			
	.10		.20		.30		.40		.50		.60		.70		.80		.90		1.00	
CFM	RPM	BHP	RPM	BHP	RPM	BHP	RPM	BHP	RPM	BHP	RPM	BHP	RPM	BHP	RPM	BHP	RPM	BHP	RPM	BHP
	7.5-HP Standard Motor & Low Static Drive Accessory												**7.5-HP Standard Motor & Drive**							
7000	—	—	—	—	614	2.59	639	2.77	662	2.94	684	3.11	706	3.30	728	3.49	750	3.70	773	3.92
7500	—	—	621	2.85	647	3.08	671	3.29	693	3.48	715	3.66	736	3.85	756	4.05	777	4.26	797	4.47
8000	627	3.16	655	3.39	680	3.64	704	3.87	725	4.09	746	4.28	766	4.48	785	4.68	805	4.89	824	5.11
8500	662	3.76	689	4.00	714	4.26	737	4.52	758	4.76	778	4.98	797	5.18	815	5.39	834	5.61	852	5.83
9000	698	4.43	724	4.69	747	4.96	770	5.24	790	5.50	810	5.74	828	5.97	846	6.18	864	6.41	881	6.63
9500	734	5.18	758	5.45	781	5.73	803	6.02	823	6.31	842	6.58	860	6.83	878	7.06	895	7.29	911	7.53
10000	770	6.00	793	6.29	816	6.59	837	6.89	856	7.20	875	7.49	893	7.77	910	8.02	926	8.27	942	8.51
10500	806	6.92	829	7.22	850	7.53	870	7.85	890	8.17	908	8.48	—	—	—	—	—	—	—	—
11000	842	7.92	864	8.24	885	8.56	—	—	—	—	—	—	—	—	—	—	—	—	—	—
							7.5-HP Standard Motor & High Static Drive Accessory													

Continued

	External Static Pressure (Inches of Water)									
	1.10		1.20		1.30		1.40		1.50	
CFM	RPM	BHP	RPM	BHP	RPM	BHP	RPM	BHP	RPM	BHP
	7.5-HP Standard Motor & Drive									
7000	795	4.14	816	4.36	837	4.58	858	4.80	879	5.03
7500	818	4.70	839	4.94	859	5.18	879	5.41	899	5.65
8000	843	5.34	862	5.58	882	5.83	901	6.09	920	6.34
8500	870	6.06	888	6.30	906	6.55	924	6.81	943	7.08
9000	898	6.87	916	8.11	933	7.36	950	7.62	967	7.89
9500	928	7.77	944	8.01	960	8.27	977	8.53	—	—
10000	—	—	—	—	—	—	—	—	—	—
10500	—	—	—	—	—	—	—	—	—	—
11000	—	—	—	—	—	—	—	—	—	—
	7.5-HP Standard Motor & High Static Drive Accessory									

For Standard Evaporator Fan Speed (RPM), reference Table 50.
For Standard Motor & Low Static Drive Accessory Fan Speed (RPM), reference Table 51.
For Oversized Evaporator Fan Speed (RPM), reference Table 53.
Fan motor heat (MBH) = 3.15 x Fan BHP.
Notes:
Data includes pressure drop due to standard filters and wet coils.
No accessories or options are included in pressure drop data. Refer to Table 54 to determine additional static pressure drop due to other options/accessories.
Factory supplied motors, in commercial equipment, are definite purpose motors, specifically designed and tested to operate reliably and continuously at all cataloged conditions. Using the full horsepower range of our fan motors as shown in our tabular data will not result in nuisance tripping or premature motor failure. Our product's warranty will not be affected.
*For 380V/60 Hz units, the oversized motor is used as the standard motor. Refer to "Motor & Sheave/Fan Speed" tables to determine operating range.

Table 32. Evaporator Fan Performance 12½ Tons with Optional Electric Heat TCD151C Standard or TXV Refrigeration System Downflow

	External Static Pressure (Inches of Water)																			
	.10		.20		.30		.40		.50		.60		.70		.80		.90		1.00	
CFM	RPM	BHP	RPM	BHP	RPM	BHP	RPM	BHP	RPM	BHP	RPM	BHP	RPM	BHP	RPM	BHP	RPM	BHP	RPM	BHP
	3-HP Standard Motor & Field Supplied Low Static Drive[i]												**3-HP Standard Motor & Drive**							
2500*	—	—	402	0.30	460	0.39	510	0.48	555	0.56	595	0.64	633	0.74	667	0.83	699	0.92	731	1.02
3250*	378	0.35	447	0.49	503	0.62	552	0.74	595	0.86	634	0.97	672	1.08	706	1.19	739	1.30	769	1.40
4000*	430	0.56	495	0.74	549	0.91	596	1.07	638	1.22	677	1.37	712	1.52	747	1.66	778	1.80	809	1.94
4500	466	0.74	528	0.95	580	1.14	627	1.33	668	1.51	706	1.68	742	1.85	776	2.02	806	2.18	836	2.34
5000	503	0.96	562	1.20	612	1.42	657	1.63	699	1.84	736	2.04	771	2.23	803	2.41	835	2.61	865	2.80
5500	540	1.22	597	1.49	645	1.74	689	1.98	729	2.20	767	2.44	801	2.66	833	2.87	864	3.07	893	3.28
6000	579	1.53	633	1.82	680	2.10	722	2.37	761	2.63	797	2.87	832	3.13	864	3.38	894	3.61	922	3.83
						3-HP Standard Motor & High Static Drive Accessory										**5-HP Oversized Motor & Drive**				

Continued

	External Static Pressure (Inches of Water)																			
	1.10		1.20		1.30		1.40		1.50		1.60		1.70		1.80		1.90		2.00	
CFM	RPM	BHP	RPM	BHP	RPM	BHP	RPM	BHP	RPM	BHP	RPM	BHP	RPM	BHP	RPM	BHP	RPM	BHP	RPM	BHP
	3-HP Standard Motor & Drive						**3-HP Standard Motor & High Static Drive Accessory**													
2500*	760	1.11	789	1.21	817	1.31	842	1.41	868	1.51	892	1.60	916	1.71	939	1.81	962	1.91	984	2.01
3250*	798	1.52	827	1.64	853	1.76	880	1.88	905	2.01	928	2.13	953	2.26	976	2.38	998	2.51	1020	2.63
4000*	839	2.07	867	2.21	893	2.33	919	2.47	943	2.59	967	2.73	991	2.88	1013	3.03	1036	3.18	1056.4	3.33
4500	865	2.50	892	2.66	919	2.81	945	2.96	970	3.11	994	3.25	1017	3.40	1039	3.55	1061	3.70	1082.3	3.85
5000	892	2.97	920	3.15	946	3.33	971	3.50	996	3.68	1020	3.85	1043	4.02	1066	4.18	1088	4.35	1109.6	4.50
5500	922	3.49	949	3.70	975	3.90	999	4.09	1023	4.28	1047	4.48	1070	4.68	1091	4.87	1114	5.06	1135.6	5.24
6000	950	4.05	977	4.29	1002	4.51	1028	4.74	1052	4.96	1074	5.16	1098	5.38	1120	5.59	—	—	—	—
											5-HP Oversized Motor & Drive									

For Standard Evaporator Fan Speed (RPM), reference Table 50.
For Standard Motor & Low Static Drive Accessory Fan Speed (RPM), reference Table 51.
For Oversized Evaporator Fan Speed (RPM), reference Table 53.
Fan motor heat (MBH) = 3.15 x Fan BHP.
Notes:
Data includes pressure drop due to standard filters and wet coils. No accessories or options are included in pressure drop data.
Refer to Table 54 to determine additional static pressure drop due to other options/accessories.
Factory supplied motors, in commercial equipment, are definite purpose motors, specifically designed and tested to operate reliably and continuously at all cataloged conditions. Using the full horsepower range of our fan motors as shown in our tabular data will not result in nuisance tripping or premature motor failure. Our product's warranty will not be affected.
*For 2500, 3250 and 4000 CFM, unit applications below 320 CFM/Ton are only applicable to TCD models only (No Gas Heat). See below for restrictions.

- Electric heaters restricted on applications below 320 CFM/Ton.
- Dehumidification (Hot Gas Reheat) or TXV with Frostat and Crankcase Heaters are required on applications below 320 CFM/Ton.

[i] Field Supplied Fan Sheave BK115 Required. Field Supplied Belt may be necessary.

Table 33. Evaporator Fan Performance 12½ Tons with Optional Electric Heat T*D151C Dehumidification (Hot Gas Reheat Option) Downflow

	External Static Pressure (Inches of Water)																			
	.10		.20		.30		.40		.50		.60		.70		.80		.90		1.00	
CFM	RPM	BHP	RPM	BHP	RPM	BHP	RPM	BHP	RPM	BHP	RPM	BHP	RPM	BHP	RPM	BHP	RPM	BHP	RPM	BHP
	3-HP Standard Motor & Drive w/Field Supplied Low Static Drive Fan Sheave													**3-HP Standard Motor & Drive**						
2500*	—	—	—	—	526	0.52	570	0.62	609	0.73	646	0.83	681	0.93	713	1.03	744	1.14	776	1.25
3000*	—	—	534	0.63	578	0.74	618	0.86	656	0.98	692	1.11	725	1.23	756	1.35	786	1.48	814	1.60
3500*	551	0.78	594	0.90	633	1.03	670	1.16	706	1.30	739	1.44	771	1.58	802	1.73	831	1.88	859	2.02
4000	618	1.11	656	1.26	692	1.40	727	1.55	759	1.71	791	1.86	821	2.01	850	2.17	878	2.34	905	2.50
4500	686	1.54	720	1.71	753	1.87	785	2.03	815	2.20	844	2.37	873	2.54	901	2.71	928	2.89	953	3.07
5000	755	2.07	786	2.26	816	2.44	846	2.61	874	2.79	902	2.98	928	3.17	954	3.37	979	3.56	1004	3.75
			3-HP Standard Motor & High Static Drive Accessory																	
5500	824	2.71	853	2.91	881	3.13	908	3.32	935	3.51	960	3.70	985	3.91	1010	4.13	1033	4.34	1056	4.54
6000	894	3.47	921	3.70	947	3.93	972	4.15	996	4.36	1021	4.56	1044	4.78	1068	5.01	1090	5.24	1112	5.47
											5-HP Oversized Motor & Drive									

Continued

	External Static Pressure (Inches of Water)																			
	1.10		1.20		1.30		1.40		1.50		1.60		1.70		1.80		1.90		2.00	
CFM	RPM	BHP	RPM	BHP	RPM	BHP	RPM	BHP	RPM	BHP	RPM	BHP	RPM	BHP	RPM	BHP	RPM	BHP	RPM	BHP
	3-HP Standard Motor & Drive									**3-HP Standard Motor & High Static Drive Accessory**										
2500*	804	1.36	832	1.48	859	1.59	883	1.71	908	1.83	931	1.95	954	2.08	977	2.21	998	2.33	1020	2.47
3000*	842	1.73	869	1.85	895	1.98	920	2.11	945	2.24	968	2.38	991	2.51	1014	2.65	1035	2.79	1057	2.94
3500*	885	2.17	910	2.31	935	2.45	959	2.59	983	2.74	1006	2.89	1029	3.04	1051	3.19	1072	3.34	1093	3.49
4000	930	2.67	956	2.85	980	3.01	1003	3.17	1026	3.34	1047	3.50	1069	3.66	1090	3.82	1110	3.99	1132	4.16
4500	978	3.25	1002	3.44	1026	3.63	1049	3.83	1071	4.02	1093	4.21	1113	4.38	1134	4.57	1154	4.75	1174	4.94
5000	1028	3.94	1051	4.14	1074	4.35	1096	4.55	1118	4.76	1140	4.98	1159	5.18	1180	5.40	1200	5.61	—	—
5500	1079	4.76	1102	4.97	1123	5.17	1146	5.40	1166	5.62	—	—	—	—	—	—	—	—	—	—
6000	1133	5.70	—	—	—	—	—	—	—	—	—	—	—	—	—	—	—	—	—	—
	5-HP Oversized Motor & Drive						**5-HP Oversized Motor & Drive w/Field Supplied Fan Sheave**													

For Standard Evaporator Fan Speed (RPM), reference Table 50.
For Standard Motor & Low Static Drive Accessory Fan Speed (RPM), reference Table 51.
For Oversized Evaporator Fan Speed (RPM), reference Table 53.
Fan motor heat (MBH) = 3.15 x Fan BHP.
Notes:
Data includes pressure drop due to standard filters and wet coils. No accessories or options are included in pressure drop data.
Refer to Table 54 to determine additional static pressure drop due to other options/accessories.
Factory supplied motors, in commercial equipment, are definite purpose motors, specifically designed and tested to operate reliably and continuously at all cataloged conditions. Using the full horsepower range of our fan motors as shown in our tabular data will not result in nuisance tripping or premature motor failure. Our product's warranty will not be affected.
*For 2500, 3000 and 3500 CFM, unit applications below 320 CFM/Ton are only applicable to TCD models only (No Gas Heat). See below for restrictions.

- Electric heaters restricted on applications below 320 CFM/Ton.
- Dehumidification (Hot Gas Reheat) or TXV with Frostat and Crankcase Heaters are required on applications below 320 CFM/Ton.

Table 34. Evaporator Fan Performance 12½ Tons with Optional Electric Heat TCH151C Standard Refrigeration System Horizontal

	External Static Pressure (Inches of Water)																			
	.10		.20		.30		.40		.50		.60		.70		.80		.90		1.00	
CFM	RPM	BHP	RPM	BHP	RPM	BHP	RPM	BHP	RPM	BHP	RPM	BHP	RPM	BHP	RPM	BHP	RPM	BHP	RPM	BHP
	3-HP Standard Motor & Field Supplied Low Static Drive[i]														**3-HP Standard Motor & Drive**					
4000	—	—	—	—	510	0.98	541	1.10	572	1.22	602	1.35	631	1.48	659	1.62	687	1.76	714	1.91
4500	—	—	521	1.17	551	1.29	579	1.42	607	1.56	635	1.68	662	1.82	688	1.98	713	2.13	738	2.28
5000	534	1.40	566	1.54	593	1.67	620	1.81	645	1.95	671	2.11	696	2.25	720	2.40	744	2.56	767	2.73
5500	581	1.83	611	1.99	637	2.13	661	2.28	685	2.43	709	2.59	732	2.76	754	2.92	777	3.08	799	3.25
6000	628	2.34	657	2.51	682	2.68	704	2.83	727	3.00	749	3.16	770	3.33	791	3.52	812	3.70	833	3.87
															5-HP Oversized Motor & Drive					

Continued

	External Static Pressure (Inches of Water)																			
	1.10		1.20		1.30		1.40		1.50		1.60		1.70		1.80		1.90		2.00	
CFM	RPM	BHP	RPM	BHP	RPM	BHP	RPM	BHP	RPM	BHP	RPM	BHP	RPM	BHP	RPM	BHP	RPM	BHP	RPM	BHP
	3-HP Standard Motor & Drive										**3-HP Standard Motor & High Static Drive Accessory**									
4000	740	2.07	766	2.23	791	2.38	814	2.54	838	2.70	860	2.86	883	3.02	905	3.19	926	3.37	948	3.55
4500	763	2.44	787	2.61	811	2.78	835	2.96	858	3.13	880	3.31	901	3.48	922	3.66	943	3.84	963	4.02
5000	790	2.90	812	3.07	835	3.24	857	3.42	879	3.61	901	3.81	922	4.00	942	4.20	962	4.39	982	4.59
5500	820	3.43	842	3.61	862	3.80	883	3.98	904	4.17	924	4.37	944	4.57	964	4.78	984	4.99	1003	5.20
6000	853	4.04	874	4.23	893	4.43	913	4.63	932	4.83	951	5.03	970	5.24	988	5.45	1007	5.66	—	—
	5-HP Oversized Motor & Drive																			

For Standard Evaporator Fan Speed (RPM), reference Table 50.
For Standard Motor & Low Static Drive Accessory Fan Speed (RPM), reference Table 51.
For Oversized Evaporator Fan Speed (RPM), reference Table 53.
Fan motor heat (MBH) = 3.15 x Fan BHP.
Notes:
Data includes pressure drop due to standard filters and wet coils. No accessories or options are included in pressure drop data.
Refer to Table 54 to determine additional static pressure drop due to other options/accessories.
Factory supplied motors, in commercial equipment, are definite purpose motors, specifically designed and tested to operate reliably and continuously at all cataloged conditions. Using the full horsepower range of our fan motors as shown in our tabular data will not result in nuisance tripping or premature motor failure. Our product's warranty will not be affected.

[i] Field Supplied Fan Sheave BK115 Required. Field Supplied Belt may be necessary.

Table 35. Evaporator Fan Performance 12½ Tons with Gas Heat YCD151C Standard or TXV Refrigeration System Downflow

	External Static Pressure (Inches of Water)																			
	.10		.20		.30		.40		.50		.60		.70		.80		.90		1.00	
CFM	RPM	BHP	RPM	BHP	RPM	BHP	RPM	BHP	RPM	BHP	RPM	BHP	RPM	BHP	RPM	BHP	RPM	BHP	RPM	BHP
	3-HP Standard Motor & Field Supplied Low Static Drive[i]										**3-HP Standard Motor & Drive**									
4000	—	—	497	0.75	551	0.92	598	1.08	641	1.23	680	1.38	716	1.53	750	1.67	782	1.82	812	1.96
4500	—	—	531	0.96	583	1.16	629	1.34	671	1.52	709	1.70	745	1.87	778	2.03	810	2.20	840	2.36
5000	506	0.98	565	1.21	616	1.43	661	1.65	701	1.85	739	2.05	774	2.25	807	2.44	838	2.63	868	2.81
5500	544	1.24	600	1.51	649	1.76	693	2.00	733	2.23	770	2.45	804	2.67	837	2.89	868	3.10	897	3.31
6000	582	1.55	636	1.84	684	2.12	726	2.39	765	2.65	801	2.90	835	3.15	867	3.39	898	3.63	927	3.86
					3-HP Standard Motor & High Static Drive Accessory											**5-HP Oversized Motor & Drive**				

Continued

	External Static Pressure (Inches of Water)																			
	1.10		1.20		1.30		1.40		1.50		1.60		1.70		1.80		1.90		2.00	
CFM	RPM	BHP	RPM	BHP	RPM	BHP	RPM	BHP	RPM	BHP	RPM	BHP	RPM	BHP	RPM	BHP	RPM	BHP	RPM	BHP
	3-HP Standard Motor & Drive										**3-HP Standard Motor & High Static Drive Accessory**									
4000	841	2.09	869	2.23	896	2.36	922	2.50	947	2.63	971	2.76	994	2.89	1016	3.04	1037	3.19	1059	3.35
4500	869	2.52	896	2.68	923	2.84	948	2.99	973	3.14	997	3.30	1020	3.45	1043	3.60	1065	3.75	1087	3.89
5000	897	2.99	924	3.17	950	3.35	976	3.53	1000	3.71	1024	3.88	1047	4.05	1070	4.22	1092	4.39	1113	4.56
5500	925	3.52	952	3.72	978	3.92	1004	4.12	1028	4.32	1052	4.51	1075	4.71	1097	4.90	1119	5.09	1140	5.28
6000	955	4.09	981	4.32	1007	4.54	1032	4.77	1056	4.99	1080	5.21	1103	5.42	1125	5.64	—	—	—	—
									5-HP Oversized Motor & Drive											

For Standard Evaporator Fan Speed (RPM), reference Table 50.
For Standard Motor & Low Static Drive Accessory Fan Speed (RPM), reference Table 51.
For Oversized Evaporator Fan Speed (RPM), reference Table 53.
Fan motor heat (MBH) = 3.15 x Fan BHP.
Notes:
Data includes pressure drop due to standard filters and wet coils. No accessories or options are included in pressure drop data.
Refer to Table 54 to determine additional static pressure drop due to other options/accessories.
Factory supplied motors, in commercial equipment, are definite purpose motors, specifically designed and tested to operate reliably and continuously at all cataloged conditions. Using the full horsepower range of our fan motors as shown in our tabular data will not result in nuisance tripping or premature motor failure. Our product's warranty will not be affected.

[i] Field Supplied Fan Sheave BK115 Required. Field Supplied Belt may be necessary.

Table 36. Evaporator Fan Performance 12½ Tons with Gas Heat Y*D151C Dehumidification (Hot Gas Reheat Option) Downflow

	External Static Pressure (Inches of Water)																			
	.10		.20		.30		.40		.50		.60		.70		.80		.90		1.00	
CFM	RPM	BHP	RPM	BHP	RPM	BHP	RPM	BHP	RPM	BHP	RPM	BHP	RPM	BHP	RPM	BHP	RPM	BHP	RPM	BHP
	3-HP Standard Motor & Drive											**3-HP Standard Motor & High Static Drive Accessory**								
4000	640	1.12	677	1.25	711	1.39	745	1.53	776	1.68	806	1.82	835	1.97	864	2.12	891	2.27	916	2.41
4500	711	1.56	745	1.70	776	1.85	806	2.01	836	2.17	864	2.33	891	2.49	917	2.66	944	2.83	969	2.9
5000	783	2.10	813	2.26	843	2.42	870	2.59	897	2.77	924	2.94	950	3.12	975	3.31	998	3.49	1022	3.68
5500	855	2.76	883	2.93	910	3.11	936	3.29	961	3.49	986	3.67	1011	3.87	1035	4.07	1057	4.26	1079	4.46
6000	928	3.54	954	3.74	979	3.93	1003	4.12	1027	4.33	1050	4.54	1072	4.74	1095	4.95	1117	5.16	1138	5.38
	5-HP Oversized Motor & Drive																			

Continued

	External Static Pressure (Inches of Water)																			
	1.10		1.20		1.30		1.40		1.50		1.60		1.70		1.80		1.90		2.00	
CFM	RPM	BHP	RPM	BHP	RPM	BHP	RPM	BHP	RPM	BHP	RPM	BHP	RPM	BHP	RPM	BHP	RPM	BHP	RPM	BHP
	3-HP Standard Motor & High Static Drive Accessory												**5-HP Oversized Motor & Drive**							
4000	940	2.56	964	2.71	987	2.86	1011	3.01	1034	3.16	1056	3.32	1077	3.47	1098	3.62	1120	3.79	1140	3.95
4500	994	3.16	1016	3.32	1038	3.49	1059	3.66	1080	3.83	1102	4.00	1122	4.17	1143	4.34	1163	4.51	1183	4.68
5000	1046	3.86	1069	4.05	1091	4.23	1112	4.41	1133	4.60	1152	4.78	1172	4.97	1190	5.15	1209	5.34	1228	5.53
5500	1101	4.67	1122	4.87	1143	5.07	1165	5.27	1186	5.48	1206	5.69	—	—	—	—	—	—	—	—
6000	1159	5.60	—	—	—	—	—	—	—	—	—	—	—	—	—	—	—	—	—	—
	5-HP Oversized Motor & Field Supplied High Static Drive[i]																			

For Standard Evaporator Fan Speed (RPM), reference Table 50.
For Standard Motor & Low Static Drive Accessory Fan Speed (RPM), reference Table 51.
For Oversized Evaporator Fan Speed (RPM), reference Table 53.
Fan motor heat (MBH) = 3.15 x Fan BHP.
Notes:
Data includes pressure drop due to standard filters and wet coils. No accessories or options are included in pressure drop data.
Refer to Table 54 to determine additional static pressure drop due to other options/accessories.
Factory supplied motors, in commercial equipment, are definite purpose motors, specifically designed and tested to operate reliably and continuously at all cataloged conditions. Using the full horsepower range of our fan motors as shown in our tabular data will not result in nuisance tripping or premature motor failure. Our product's warranty will not be affected.

[i] Field Supplied Fan Sheave BK120. Field Supplied Belt may be necessary.

Table 37. Evaporator Fan Performance 12½ Tons with Gas Heat YCH151C Standard Refrigeration System Horizontal

	External Static Pressure (Inches of Water)																			
	.10		.20		.30		.40		.50		.60		.70		.80		.90		1.00	
CFM	RPM	BHP	RPM	BHP	RPM	BHP	RPM	BHP	RPM	BHP	RPM	BHP	RPM	BHP	RPM	BHP	RPM	BHP	RPM	BHP
	3-HP Standard Motor & Field Supplied Low Static Drive[i]												**3-HP Standard Motor & Drive**							
4000	—	—	—	—	520	1.01	550	1.13	580	1.25	610	1.38	638	1.51	666	1.65	693	1.80	720	1.95
4500	502	1.10	533	1.21	562	1.34	590	1.47	617	1.60	644	1.73	671	1.88	696	2.03	721	2.18	746	2.33
5000	551	1.47	579	1.61	606	1.74	632	1.87	657	2.02	682	2.17	706	2.31	730	2.46	754	2.63	777	2.80
5500	600	2.92	627	2.08	651	2.22	675	237	699	2.52	722	2.68	744	2.85	766	3.00	788	3.16	810	3.34
6000	649	2.46	675	2.64	698	2.79	720	2.94	742	3.11	764	3.28	785	3.46	805	3.64	825	3.81	845	3.98
															5-HP Oversized Motor & Drive					

Continued

	External Static Pressure (Inches of Water)																			
	1.10		1.20		1.30		1.40		1.50		1.60		1.70		1.80		1.90		2.00	
CFM	RPM	BHP	RPM	BHP	RPM	BHP	RPM	BHP	RPM	BHP	RPM	BHP	RPM	BHP	RPM	BHP	RPM	BHP	RPM	BHP
	3-HP Standard Motor & Drive										**3-HP Standard Motor & High Static Drive**									
4000	746	2.10	771	2.26	795	2.41	819	2.57	842	2.72	864	2.89	886	3.05	908	3.22	929	3.40	951	3.58
4500	770	2.49	794	2.66	818	2.83	841	3.01	863	3.18	885	3.35	906	3.53	927	3.70	947	3.88	967	4.06
5000	799	2.96	821	3.13	843	3.31	965	3.49	887	3.68	908	3.87	929	4.07	949	4.26	969	4.45	988	4.64
5500	831	3.52	852	3.70	873	3.89	893	4.07	913	4.26	933	4.46	953	4.66	972	4.87	992	5.08	1011	5.29
6000	865	4.15	885	4.35	905	4.55	924	4.75	943	4.95	962	5.15	980	5.35	999	5.56	—	—	—	—
	5-HP Oversized Motor & Drive																			

For Standard Evaporator Fan Speed (RPM), reference Table 50.
For Standard Motor & Low Static Drive Accessory Fan Speed (RPM), reference Table 51.
For Oversized Evaporator Fan Speed (RPM), reference Table 53.
Fan motor heat (MBH) = 3.15 x Fan BHP.
Notes:
Data includes pressure drop due to standard filters and wet coils. No accessories or options are included in pressure drop data.
Refer to Table 54 to determine additional static pressure drop due to other options/accessories.
Factory supplied motors, in commercial equipment, are definite purpose motors, specifically designed and tested to operate reliably and continuously at all cataloged conditions. Using the full horsepower range of our fan motors as shown in our tabular data will not result in nuisance tripping or premature motor failure. Our product's warranty will not be affected.

[i] Field Supplied Fan Sheave BK115 required. Field Supplied Belt may be necessary.

Table 38. Evaporator Fan Performance 15 Tons with Optional Electric Heat TC*181C Standard or TXV Refrigeration System Downflow or Horizontal

	External Static Pressure (Inches of Water)																			
	.10		.20		.30		.40		.50		.60		.70		.80		.90		1.00	
CFM	RPM	BHP	RPM	BHP	RPM	BHP	RPM	BHP	RPM	BHP	RPM	BHP	RPM	BHP	RPM	BHP	RPM	BHP	RPM	BHP
	3-HP Standard Motor & Field Supplied Extra Low Static Drive										**3-HP Standard Motor & Field Supplied Low Static Drive[i]**									
3000*	—	—	337	0.32	387	0.42	432	0.53	472	0.65	511	0.77	547	0.90	580	1.03	611	1.16	640	1.29
3900*	341	0.45	384	0.55	423	0.66	462	0.78	500	0.91	536	1.05	569	1.19	600	1.35	630	1.51	660	1.67
4800	399	0.76	437	0.89	471	1.01	503	1.14	535	1.29	566	1.44	598	1.60	629	1.77	658	1.94	684	2.11
5400	445	1.04	474	1.19	506	1.33	536	1.47	564	1.62	592	1.78	621	1.95	648	2.12	676	2.30	704	2.49
6000	479	1.38	513	1.55	543	1.72	571	1.87	597	2.03	623	2.19	648	2.36	673	2.55	699	2.74	723	2.93
6600	519	1.79	552	1.98	580	2.17	606	2.35	632	2.52	656	2.69	679	2.87	702	3.05	725	3.25	748	3.46
7200	560	2.28	591	2.49	618	2.70	643	2.91	667	3.09	690	3.27	712	3.46	734	3.65	755	3.85	776	4.06
					3-HP Standard Motor & Drive															

Continued

	External Static Pressure (Inches of Water)																			
	1.10		1.20		1.30		1.40		1.50		1.60		1.70		1.80		1.90		2.00	
CFM	RPM	BHP	RPM	BHP	RPM	BHP	RPM	BHP	RPM	BHP	RPM	BHP	RPM	BHP	RPM	BHP	RPM	BHP	RPM	BHP
	3-HP Standard Motor & Drive								**3-HP Standard Motor & High Static Drive Accessory**											
3000*	667	1.43	693	1.57	717	1.71	740	1.86	763	2.01	784	2.16	805	2.31	825	2.47	845	2.63	864	2.80
3900*	688	1.84	715	2.00	741	2.17	766	2.34	790	2.51	812	2.68	834	2.85	855	3.03	875	3.21	895	3.39
4800	710	2.29	735	2.48	760	2.68	785	2.88	809	3.09	832	3.29	854	3.49	876	3.69	898	3.90	919	4.10
5400	730	2.68	755	2.88	778	3.07	800	3.28	823	3.49	845	3.71	867	3.94	889	4.17	910	4.40	931	4.62
6000	749	3.13	774	3.34	798	3.56	821	3.77	842	3.99	863	4.20	884	4.43	904	4.66	924	4.90	944	5.15
6600	771	3.67	794	3.88	816	4.09	839	4.32	862	4.56	884	4.80	904	5.03	924	5.27	943	5.51	961	5.75
7200	797	4.29	818	4.51	839	4.74	860	4.96	881	5.20	902	5.45	923	5.70	—	—	—	—	—	—
							5-HP Oversized Motor & Drive													

For Standard Evaporator Fan Speed (RPM), reference Table 50.
For Standard Motor & Low Static Drive Accessory Fan Speed (RPM), reference Table 51.
For Oversized Evaporator Fan Speed (RPM), reference Table 53.
Fan motor heat (MBH) = 3.15 x Fan BHP.
Notes:
Data includes pressure drop due to standard filters and wet coils. No accessories or options are included in pressure drop data.
Refer to Table 54 to determine additional static pressure drop due to other options/accessories.
Factory supplied motors, in commercial equipment, are definite purpose motors, specifically designed and tested to operate reliably and continuously at all cataloged conditions. Using the full horsepower range of our fan motors as shown in our tabular data will not result in nuisance tripping or premature motor failure. Our product's warranty will not be affected.
*For 3000 and 3900 CFM, unit applications below 320 CFM/Ton are only applicable to TCD models only (No Gas Heat). See below for restrictions.

- Electric heaters restricted on applications below 320 CFM/Ton.
- Dehumidification (Hot Gas Reheat) or TXV with Frostat and Crankcase Heaters are required on applications below 320 CFM/Ton.

[i] Field Supplied Fan Sheave BK120 Required. Field Supplied Belt may be necessary.

Table 39. Evaporator Fan Performance 15 Tons with Optional Electric Heat T*D181C Dehumidification (Hot Gas Reheat Option) Downflow

	External Static Pressure (Inches of Water)																			
	.10		.20		.30		.40		.50		.60		.70		.80		.90		1.00	
CFM	RPM	BHP	RPM	BHP	RPM	BHP	RPM	BHP	RPM	BHP	RPM	BHP	RPM	BHP	RPM	BHP	RPM	BHP	RPM	BHP
	3-HP Standard Motor w/ Field Supplied Motor Sheave(i)				**3-HP Standard Motor w/Field Supplied Motor Sheave(ii)**						**3-HP Standard Motor w/Field Supplied Low Static Drive Fan Sheave**									
3000*	295	0.26	346	0.35	391	0.45	432	0.56	471	0.68	506	0.80	539	0.92	569	1.04	596	1.17	622	1.30
3600*	333	0.40	379	0.51	420	0.62	458	0.74	494	0.87	527	1.00	559	1.14	589	1.28	617	1.43	644	1.57
4200*	373	0.60	415	0.72	452	0.85	487	0.98	520	1.12	551	1.26	581	1.41	610	1.57	638	1.73	664	1.89
4800	414	0.84	452	0.99	487	1.13	519	1.27	550	1.43	579	1.59	607	1.74	635	1.91	660	2.08	686	2.26
5400	455	1.14	491	1.32	524	1.48	554	1.64	582	1.80	610	1.98	637	2.15	662	2.33	687	2.51	710	2.70
6000	497	1.51	531	1.73	561	1.91	590	2.08	617	2.26	643	2.44	667	2.63	692	2.83	715	3.02	739	3.22
6600	540	1.96	572	2.20	601	2.42	628	2.61	653	2.80	678	2.99	701	3.20	724	3.41	746	3.61	768	3.83
7200	583	2.50	613	2.75	641	3.02	666	3.23	690	3.44	714	3.65	736	3.86	758	4.08	778	4.30	799	4.53
	3-HP Standard Motor & Drive										**5-HP Oversized Motor & Drive**									

Continued

	External Static Pressure (Inches of Water)																			
	1.10		1.20		1.30		1.40		1.50		1.60		1.70		1.80		1.90		2.00	
CFM	RPM	BHP	RPM	BHP	RPM	BHP	RPM	BHP	RPM	BHP	RPM	BHP	RPM	BHP	RPM	BHP	RPM	BHP	RPM	BHP
	3-HP Standard Motor & Drive											**3-HP Standard Motor & High Static Drive Accessory**								
3000*	646	1.43	669	1.56	692	1.70	714	1.84	734	1.98	755	2.13	775	2.28	793	2.42	813	2.58	830	2.72
3600*	669	1.72	694	1.88	716	2.02	738	2.18	759	2.34	778	2.49	798	2.66	817	2.82	835	2.98	854	3.16
4200*	690	2.06	715	2.23	737	2.39	760	2.57	782	2.74	803	2.92	822	3.09	842	3.28	861	3.46	878	3.64
4800	711	2.44	735	2.63	758	2.81	780	3.00	802	3.19	823	3.38	843	3.58	864	3.78	882	3.97	901	4.17
5400	734	2.89	758	3.09	780	3.29	801	3.49	822	3.69	844	3.91	864	4.12	883	4.33	903	4.55	921	4.76
6000	761	3.42(iii)	782	3.63	804	3.84	824	4.05	845	4.27	865	4.49	885	4.72	904	4.95	923	5.18	941	5.41
6600	789	4.05	810	4.26	831	4.49	850	4.71	870	4.94	889	5.18	908	5.41	927	5.65	—	—	—	—
7200	819	4.76	840	5.00	859	5.23	879	5.47	898	5.72	—	—	—	—	—	—	—	—	—	—
	5-HP Oversized Motor & Drive																			

For Standard Evaporator Fan Speed (RPM), reference Table 50.
For Standard Motor & Low Static Drive Accessory Fan Speed (RPM), reference Table 51.
For Oversized Evaporator Fan Speed (RPM), reference Table 53.
Fan motor heat (MBH) = 3.15 x Fan BHP.
Notes:
Data includes pressure drop due to standard filters and wet coils. No accessories or options are included in pressure drop data.
Refer to Table 54 to determine additional static pressure drop due to other options/accessories.
Factory supplied motors, in commercial equipment, are definite purpose motors, specifically designed and tested to operate reliably and continuously at all cataloged conditions. Using the full horsepower range of our fan motors as shown in our tabular data will not result in nuisance tripping or premature motor failure. Our product's warranty will not be affected.
*For 3000, 3600 and 4200 CFM, unit applications below 320 CFM/Ton are only applicable to TCD models only (No Gas Heat). See below for restrictions.

- Electric heaters restricted on applications below 320 CFM/Ton.
- Dehumidification (Hot Gas Reheat) or TXV with Frostat and Crankcase Heaters are required on applications below 320 CFM/Ton.

(i) Field Supplied Fan Sheave BK160 Required. Field Supplied Belt may be necessary. Field Supplied Belt may be necessary.
(ii) Field Supplied Fan Sheave BK120 Required. Field Supplied Belt may be necessary. Field Supplied Belt may be necessary.
(iii) 3-HP Standard Motor & High Static Drive Accessory.

Table 40. Evaporator Fan Performance 15 Tons with Gas Heat YC*181C Standard or TXV Refrigeration System Downflow or Horizontal

	External Static Pressure (Inches of Water)																			
	.10		.20		.30		.40		.50		.60		.70		.80		.90		1.00	
CFM	RPM	BHP	RPM	BHP	RPM	BHP	RPM	BHP	RPM	BHP	RPM	BHP	RPM	BHP	RPM	BHP	RPM	BHP	RPM	BHP
	3-HP Standard Motor & Field Supplied Low Static Drive[(i)]												**3-HP Standard Motor & Drive**							
4800	414	0.81	450	0.94	483	1.06	515	1.20	548	1.35	578	1.50	609	1.66	640	1.83	668	2.00	694	2.18
5400	456	1.11	490	1.26	520	1.39	549	1.54	578	1.70	607	1.87	635	2.03	662	2.21	689	2.39	716	2.58
6000	499	1.48	531	1.65	559	1.81	585	1.96	611	2.12	638	2.29	664	2.48	689	2.67	714	2.85	738	3.05
6600	542	1.92	572	2.12	599	2.3	624	2.46	648	2.63	671	2.81	695	3.00	719	3.20	743	3.41	765	3.62
7200	586	2.45	614	2.67	640	2.88	663	3.06	686	3.24	708	3.42	729	3.61	751	3.82	773	4.04	795	4.26
													5-HP Oversized Motor & Drive							

Continued

	External Static Pressure (Inches of Water)																			
	1.10		1.20		1.30		1.40		1.50		1.60		1.70		1.80		1.90		2.00	
CFM	RPM	BHP	RPM	BHP	RPM	BHP	RPM	BHP	RPM	BHP	RPM	BHP	RPM	BHP	RPM	BHP	RPM	BHP	RPM	BHP
	3-HP Standard Motor & Drive						**3-HP Standard Motor & High Static Drive Accessory**													
4800	719	2.36	744	2.55	769	2.75	792	2.95	815	3.14	838	3.34	859	3.54	880	3.73	901	3.93	921	4.13
5400	742	2.77	766	2.97	789	3.17	811	3.38	833	3.59	855	3.81	876	4.03	897	4.26	917	4.48	937	4.70
6000	763	3.25	788	3.46	811	3.68	833	3.89	855	4.11	875	4.33	896	4.56	916	4.80	935	5.04	955	5.28
6600	788	3.82	810	4.03	832	4.26	855	4.49	877	4.72	898	4.96	918	5.20	937	5.43	956	5.67	—	—
7200	816	4.49	837	4.71	857	4.94	989	5.17	898	5.41	919	5.66	—	—	—	—	—	—	—	—
	5-HP Oversized Motor & Drive																			

For Standard Evaporator Fan Speed (RPM), reference Table 50.
For Standard Motor & Low Static Drive Accessory Fan Speed (RPM), reference Table 51.
For Oversized Evaporator Fan Speed (RPM), reference Table 53.
Fan motor heat (MBH) = 3.15 x Fan BHP.
Notes:
Data includes pressure drop due to standard filters and wet coils. No accessories or options are included in pressure drop data.
Refer to Table 54 to determine additional static pressure drop due to other options/accessories.
Factory supplied motors, in commercial equipment, are definite purpose motors, specifically designed and tested to operate reliably and continuously at all cataloged conditions. Using the full horsepower range of our fan motors as shown in our tabular data will not result in nuisance tripping or premature motor failure. Our product's warranty will not be affected.

(i) Field Supplied Fan Sheave BK120 required. Field Supplied Belt may be necessary.

Table 41. Evaporator Fan Performance 15 Tons with Gas Heat Y*D181C Dehumidification (Hot Gas Reheat) Option Downflow

	External Static Pressure (Inches of Water)																			
	.10		.20		.30		.40		.50		.60		.70		.80		.90		1.00	
CFM	RPM	BHP	RPM	BHP	RPM	BHP	RPM	BHP	RPM	BHP	RPM	BHP	RPM	BHP	RPM	BHP	RPM	BHP	RPM	BHP
	3-HP Standard Motor & Field Supplied Low Static Drive[i]										**3-HP Standard Motor & Drive**									
4800	427	0.88	463	1.03	496	1.16	527	1.31	557	1.46	586	1.61	614	1.77	641	1.93	667	2.10	693	2.29
5400	471	1.21	505	1.38	535	1.53	564	1.69	591	1.85	618	2.02	644	2.19	669	2.36	695	2.54	718	2.72
6000	516	1.61	547	1.81	576	1.98	603	2.15	628	2.33	653	2.51	677	2.70	700	2.88	724	3.07	747	3.26
6600	561	2.09	590	2.32	617	2.52	643	2.71	667	2.90	690	3.09	712	3.29	734	3.49	756	3.70	777	3.90
7200	607	2.67	634	2.92	659	3.16	683	3.36	707	3.56	728	3.77	749	3.98	770	4.20	791	4.42	811	4.64
									5-HP Oversized Motor & Drive											

Continued

	External Static Pressure (Inches of Water)																			
	1.10		1.20		1.30		1.40		1.50		1.60		1.70		1.80		1.90		2.00	
CFM	RPM	BHP	RPM	BHP	RPM	BHP	RPM	BHP	RPM	BHP	RPM	BHP	RPM	BHP	RPM	BHP	RPM	BHP	RPM	BHP
	3-HP Standard Motor & Drive						**3-HP Standard Motor & High Static Drive Accessory**													
4800	719	2.49	742	2.69	765	2.89	787	3.09	808	3.28	829	3.48	849	3.68	869	3.89	887	4.09	906	4.29
5400	742	2.91	765	3.12	788	3.34	810	3.56	831	3.79	852	4.01	872	4.24	891	4.46	909	4.67	928	4.91
6000	769	3.46	791	3.66	812	3.87	833	4.09	855	4.33	874	4.57	894	4.81	913	5.06	932	5.31	950	5.56
6600	799	4.11	819	4.32	840	4.53	860	4.75	879	4.98	899	5.22	918	5.46	937	5.72	—	—	—	—
7200	830	4.86	850	5.09	870	5.31	888	5.54	—	—	—	—	—	—	—	—	—	—	—	—
	5-HP Oversized Motor & Drive																			

For Standard Evaporator Fan Speed (RPM), reference Table 50.
For Standard Motor & Low Static Drive Accessory Fan Speed (RPM), reference Table 51.
For Oversized Evaporator Fan Speed (RPM), reference Table 53.
Fan motor heat (MBH) = 3.15 x Fan BHP.
Notes:
Data includes pressure drop due to standard filters and wet coils. No accessories or options are included in pressure drop data.
Refer to Table 54 to determine additional static pressure drop due to other options/accessories.
Factory supplied motors, in commercial equipment, are definite purpose motors, specifically designed and tested to operate reliably and continuously at all cataloged conditions. Using the full horsepower range of our fan motors as shown in our tabular data will not result in nuisance tripping or premature motor failure. Our product's warranty will not be affected.

[i] Field Supplied Fan Sheave BK120 required. Field Supplied Belt may be necessary.

Table 42. Evaporator Fan Performance 17½ Tons with Optional Electric Heat TC*211C Standard or TXV Refrigeration System Downflow or Horizontal

	External Static Pressure (Inches of Water)																			
	.10		.20		.30		.40		.50		.60		.70		.80		.90		1.00	
CFM	RPM	BHP	RPM	BHP	RPM	BHP	RPM	BHP	RPM	BHP	RPM	BHP	RPM	BHP	RPM	BHP	RPM	BHP	RPM	BHP
	5-HP Standard Motor & Field Supplied Extra Low Static Drive(i)										**5-HP Standard Motor & Field Supplied Low Static Drive(ii)**									
3500*	—	—	—	—	—	—	448	0.66	488	0.78	523	0.91	557	1.05	590	1.20	622	1.35	652	1.50
4550*	—	—	—	—	457	0.90	490	1.03	524	1.17	557	1.32	590	1.48	621	1.64	649	1.80	676	1.97
5600	452	1.14	487	1.30	518	1.45	547	1.60	575	1.75	602	1.91	629	2.08	656	2.26	683	2.43	710	2.63
6300	499	1.63	532	1.76	561	1.94	588	2.10	614	2.26	639	2.43	663	2.60	687	2.79	711	2.99	735	3.19
7000	546	2.11	578	2.31	606	2.52	631	2.71	655	2.89	678	3.07	701	3.25	723	3.44	744	3.64	766	3.85
7700	594	2.75	625	2.98	651	3.21	675	3.43	698	3.64	720	3.84	741	4.03	761	4.23	782	4.44	801	4.65
8400	642	3.52	671	3.78	697	4.03	720	4.27	741	4.51	762	4.73	782	4.95	802	5.16	821	5.38	840	5.60
												5-HP Standard Motor & High Static Drive Accessory								

Continued

	External Static Pressure (Inches of Water)																			
	1.10		1.20		1.30		1.40		1.50		1.60		1.70		1.80		1.90		2.00	
CFM	RPM	BHP	RPM	BHP	RPM	BHP	RPM	BHP	RPM	BHP	RPM	BHP	RPM	BHP	RPM	BHP	RPM	BHP	RPM	BHP
	5-HP Standard Motor & Drive										**5-HP Standard Motor & High Static Drive Accessory**									
3500*	680	1.65	707	1.80	732	1.95	756	2.11	779	2.27	801	2.43	822	2.60	843	2.77	863	2.94	882	3.11
4550*	703	2.15	729	2.34	754	2.54	779	2.73	803	2.92	827	3.11	849	3.31	871	3.50	892	3.70	913	3.89
5600	736	2.83	761	3.03	785	3.23	807	3.43	829	3.64	851	3.86	872	4.09	893	4.32	914	4.56	935	4.80
6300	759	3.38	783	3.59	807	3.82	830	4.04	853	4.27	874	4.49	894	4.72	913	4.95	933	5.19	952	5.43
7000	788	4.07	810	4.29	831	4.51	852	4.74	874	4.97	895	5.22	917	5.47	937	5.72	957	5.97	975	6.22
7700	821	4.87	841	5.10	861	5.34	881	5.59	900	5.83	919	6.07	939	6.32	958	6.58	978	6.85	997	7.12
8400	858	5.82	876	6.06	894	6.30	912	6.55	930	6.81	949	7.08	967	7.34	984	7.60	1002	7.87	—	—
	7.5-HP Oversized Motor & Drive																			

For Standard Evaporator Fan Speed (RPM), reference Table 50.
For Standard Motor & Low Static Drive Accessory Fan Speed (RPM), reference Table 51.
For Oversized Evaporator Fan Speed (RPM), reference Table 53.
Fan motor heat (MBH) = 3.15 x Fan BHP.
Notes:
Data includes pressure drop due to standard filters and wet coils. No accessories or options are included in pressure drop data.
Refer to Table 54 to determine additional static pressure drop due to other options/accessories.
Factory supplied motors, in commercial equipment, are definite purpose motors, specifically designed and tested to operate reliably and continuously at all cataloged conditions. Using the full horsepower range of our fan motors as shown in our tabular data will not result in nuisance tripping or premature motor failure. Our product's warranty will not be affected.
*For 3500 and 4550 CFM, unit applications below 320 CFM/Ton are only applicable to TCD models only (No Gas Heat). See below for restrictions.

- Electric heaters restricted on applications below 320 CFM/Ton.
- Dehumidification (Hot Gas Reheat) or TXV with Frostat and Crankcase Heaters are required on applications below 320 CFM/Ton.

(i) Field Supplied Fan Sheave 1B5V200 and Field Supplied Motor Sheave 1VP34 Required. Field Supplied Belt may be necessary.
(ii) Field Supplied Fan Sheave BK190 Required. Field Supplied Belt may be necessary.

Table 43. Evaporator Fan Performance 17½ Tons with Gas Heat YC*211C Standard or TXV Refrigeration System Downflow or Horizontal

	External Static Pressure (Inches of Water)																			
	.10		.20		.30		.40		.50		.60		.70		.80		.90		1.00	
CFM	RPM	BHP	RPM	BHP	RPM	BHP	RPM	BHP	RPM	BHP	RPM	BHP	RPM	BHP	RPM	BHP	RPM	BHP	RPM	BHP
	5-HP Standard Motor & Field Supplied Low Static Drive[i]										**5-HP Standard Motor & Drive**									
5600	—	—	—	—	533	1.52	561	1.67	589	1.83	617	2.00	644	2.18	670	2.35	697	2.53	723	2.73
6300	521	1.69	551	1.88	579	2.04	604	2.20	629	2.36	654	2.54	679	2.73	704	2.93	728	3.12	751	3.32
7000	571	2.27	600	2.48	626	2.68	650	2.85	673	3.03	695	3.20	718	3.40	740	3.60	763	3.82	785	4.04
7700	622	2.96	650	3.20	674	3.43	697	3.64	719	3.83	739	4.02	760	4.21	780	4.42	800	4.64	821	4.87
8400	674	3.80	700	4.05	723	4.31	745	4.55	765	4.77	785	4.98	804	5.18	823	5.39	841	5.62	860	5.85[ii]
									5-HP Standard Motor & High Static Drive Accessory											

Continued

	External Static Pressure (Inches of Water)																			
	1.10		1.20		1.30		1.40		1.50		1.60		1.70		1.80		1.90		2.00	
CFM	RPM	BHP	RPM	BHP	RPM	BHP	RPM	BHP	RPM	BHP	RPM	BHP	RPM	BHP	RPM	BHP	RPM	BHP	RPM	BHP
	5-HP Standard Motor & Drive								**5-HP Standard Motor & High Static Drive Accessory**											
5600	749	2.93	773	3.13	796	3.33	818	3.54	840	3.75	861	3.98	882	4.20	903	4.43	923	4.66	943	4.89
6300	775	3.52	798	3.74	822	3.96	844	4.18	866	4.41	887	4.64	907	4.87	926	5.10	945	5.35	964	5.60
7000	806	4.26	828	4.48	849	4.70	870	4.93	891	5.17	912	5.41	932	5.66	952	5.92	971	6.17	990	6.42
7700	841	5.11	861	5.35	881	5.59	900	5.83	920	6.07	939	6.32	958	6.57	977	6.84	996	7.11	—	—
8400	878	6.09	897	6.34	916	6.61	934	6.87	953	7.14	971	7.40	988	7.66	—	—	—	—	—	—
	7.5-HP Oversized Motor & Drive																			

For Standard Evaporator Fan Speed (RPM), reference Table 50.
For Standard Motor & Low Static Drive Accessory Fan Speed (RPM), reference Table 51.
For Oversized Evaporator Fan Speed (RPM), reference Table 53.
Fan motor heat (MBH) = 3.15 x Fan BHP.
Notes:
Data includes pressure drop due to standard filters and wet coils. No accessories or options are included in pressure drop data.
Refer to Table 54 to determine additional static pressure drop due to other options/accessories.
Factory supplied motors, in commercial equipment, are definite purpose motors, specifically designed and tested to operate reliably and continuously at all cataloged conditions. Using the full horsepower range of our fan motors as shown in our tabular data will not result in nuisance tripping or premature motor failure. Our product's warranty will not be affected.

(i) Field Supplied Fan Sheave BK190 required. Field Supplied Belt may be necessary.
(ii) 7.5 HP Oversized Motor & Drive

Table 44. Evaporator Fan Performance 20 Tons with Optional Electric Heat TC*241C Standard or TXV Refrigeration System Downflow or Horizontal

	External Static Pressure (Inches of Water)																			
	.10		.20		.30		.40		.50		.60		.70		.80		.90		1.00	
CFM	RPM	BHP	RPM	BHP	RPM	BHP	RPM	BHP	RPM	BHP	RPM	BHP	RPM	BHP	RPM	BHP	RPM	BHP	RPM	BHP
	5-HP Standard Motor & Field Supplied Extra Low Static Drive(i)										**5-HP Standard Motor & Field Supplied Low Static Drive(ii)**									
4000*	—	—	—	—	428	0.69	467	0.82	504	0.95	538	1.08	572	1.23	603	1.38	632	1.55	660	1.71
5200*	426	0.94	463	1.09	494	1.22	524	1.35	555	1.51	585	1.67	614	1.83	642	2.00	670	2.17	696	2.35
6400	506	1.64	540	1.84	570	2.03	595	2.19	620	2.34	644	2.51	669	2.69	693	2.89	717	3.09	741	3.29
7200	560	2.28	592	2.50	620	2.72	646	2.92	668	3.10	690	3.27	711	3.45	733	3.65	755	3.86	777	4.08
8000	616	3.07	645	3.31	672	3.56	696	3.80	719	4.02	739	4.22	759	4.41	778	4.60	797	4.81	817	5.03
8800	671	4.04	698	4.29	724	4.55	747	4.83	769	5.10	790	5.34	808	5.56	826	5.77	844	5.98	861	6.20
9600	728	5.19	753	5.46	776	5.74	799	6.04	820	6.34	840	6.63	859	6.90	876	7.14	893	7.37	909	7.59
	5-HP Standard Motor & Drive						**7.5-HP Standard Motor w/Field Supplied Motor Sheave(iii)**							**7.5-HP Oversized Motor & Drive**						

Continued

	External Static Pressure (Inches of Water)																			
	1.10		1.20		1.30		1.40		1.50		1.60		1.70		1.80		1.90		2.00	
CFM	RPM	BHP	RPM	BHP	RPM	BHP	RPM	BHP	RPM	BHP	RPM	BHP	RPM	BHP	RPM	BHP	RPM	BHP	RPM	BHP
	5-HP Standard Motor & Drive										**5-HP Standard Motor & High Static Drive Accessory**									
4000*	688	1.87	714	2.03	739	2.20	764	2.36	787	2.53	810	2.70	831	2.87	852	3.05	873	3.23	892	3.41
5200*	722	2.54	747	2.73	771	2.93	795	3.14	817	3.35	839	3.56	861	3.77	882	3.98	902	4.19	923	4.41
6400	765	3.49	788	3.70	810	3.91	832	4.12	854	4.34	875	4.57	896	4.80	916	5.04	936	5.29	955	5.54
7200	799	4.31	820	4.53	841	4.76	862	4.99	883	5.22	902	5.46	922	5.69	942	5.94	961	6.19	980	6.44
8000	837	5.26	857	5.51	876	5.76	896	6.01	915	6.26	934	6.52	953	6.77	971	7.03	989	7.29	—	—
8800	879	6.43	897	6.67	915	6.93	933	7.19	951	7.46	969	7.74	986	8.01	—	—	—	—	—	—
9600	925	7.83	941	8.07	958	8.32	974	8.58	—	—	—	—	—	—	—	—	—	—	—	—
	7.5-HP Oversized Motor & Drive																			

For Standard Evaporator Fan Speed (RPM), reference Table 50.
For Standard Motor & Low Static Drive Accessory Fan Speed (RPM), reference Table 51.
For Oversized Evaporator Fan Speed (RPM), reference Table 53.
Fan motor heat (MBH) = 3.15 x Fan BHP.
Notes:
Data includes pressure drop due to standard filters and wet coils. No accessories or options are included in pressure drop data.
Refer to Table 54 to determine additional static pressure drop due to other options/accessories.
Factory supplied motors, in commercial equipment, are definite purpose motors, specifically designed and tested to operate reliably and continuously at all cataloged conditions. Using the full horsepower range of our fan motors as shown in our tabular data will not result in nuisance tripping or premature motor failure. Our product's warranty will not be affected.
*For 4000 and 5200 CFM, unit applications below 320 CFM/Ton are only applicable to TCD models only (No Gas Heat). See below for restrictions.

- Electric heaters restricted on applications below 320 CFM/Ton.
- Dehumidification (Hot Gas Reheat) or TXV with Frostat and Crankcase Heaters are required on applications below 320 CFM/Ton.

(i) Field Supplied Fan Sheave B5V200 and Field Supplied Motor Sheave 1VP34 Required. Field Supplied Belt may be necessary.
(ii) Field Supplied Fan Sheave BK190 Required. Field Supplied Belt may be necessary.
(iii) 7.5 Standard Motor with Field Supplied Motor Sheave IVP50 required. Field Supplied Belt may be necessary.

Table 45. Evaporator Fan Performance 20 Tons with Optional Electric Heat T*D241C Dehumidification (Hot Gas Reheat Option) Downflow

	External Static Pressure (Inches of Water)																			
	.10		.20		.30		.40		.50		.60		.70		.80		.90		1.00	
CFM	RPM	BHP	RPM	BHP	RPM	BHP	RPM	BHP	RPM	BHP	RPM	BHP	RPM	BHP	RPM	BHP	RPM	BHP	RPM	BHP
	5-HP Standard Motor & Field Supplied Fan Sheave(i)								**5-HP Standard Motor & Drive & Field Supplied Low Static Drive Fan Sheave**							**5-HP Standard Motor & Drive**				
4000*	—	—	—	—	441	0.77	477	0.90	511	1.03	543	1.17	573	1.32	603	1.47	631	1.63	658	1.78
4800*	414	0.84	452	0.99	487	1.13	519	1.27	550	1.43	579	1.59	607	1.74	635	1.91	660	2.08	686	2.26
5600*	469	1.25	504	1.45	536	1.61	566	1.78	594	1.95	620	2.12	647	2.30	672	2.49	696	2.67	720	2.87
6400	525	1.80	558	2.03	588	2.24	615	2.42	641	2.61	666	2.80	689	3.00	713	3.20	736	3.41	758	3.62
7200	583	2.50	613	2.75	641	3.02	666	3.23	690	3.44	714	3.65	736	3.86	758	4.08	778	4.30	799	4.53
8000	641	3.37	669	3.64	695	3.93	719	4.21	742	4.45	763	4.67	785	4.91	805	5.14	825	5.38	844	5.62(ii)
8800	699	4.42	725	4.72	750	5.03	773	5.35	794	5.65	815	5.91(iii)	835	6.15	854	6.41	873	6.66	892	6.93
9600	758	5.67	782	6.00	805	6.32	827	6.68	848	7.04	867	7.35	886	7.63	904	7.90	923	8.18	941	8.46
							7.5-HP Oversized Motor & Drive													

Continued

	External Static Pressure (Inches of Water)																			
	1.10		1.20		1.30		1.40		1.50		1.60		1.70		1.80		1.90		2.00	
CFM	RPM	BHP	RPM	BHP	RPM	BHP	RPM	BHP	RPM	BHP	RPM	BHP	RPM	BHP	RPM	BHP	RPM	BHP	RPM	BHP
	5-HP Standard Motor & Drive														**5-HP Standard Motor & High Static Drive**					
4000*	684	1.94	708	2.10	731	2.27	753	2.43	775	2.60	795	2.77	814	2.94	834	3.12	852	3.29	870	3.47
4800*	711	2.44	735	2.63	758	2.81	780	3.00	802	3.19	823	3.38	843	3.58	864	3.78	882	3.97	901	4.17
5600*	743	3.06	765	3.26	787	3.46	809	3.67	830	3.88	850	4.09	871	4.31	890	4.53	910	4.75	929	4.98
6400	779	3.82	800	4.04	821	4.26	841	4.48	861	4.70	881	4.93	899	5.16	919	5.41	938	5.66	956	5.90
7200	819	4.76	840	5.00	859	5.23	879	5.47	898	5.72	916	5.96	933	6.19	952	6.46	968	6.70	987	6.97
8000	863	5.87	881	6.12	900	6.38	918	6.64	936	6.90	954	7.16	971	7.42	988	7.69	—	—	—	—
8800	909	7.19	927	7.46	944	7.73	961	8.01	978	8.29	994	8.56	—	—	—	—	—	—	—	—
9600	—	—	—	—	—	—	—	—	—	—	—	—	—	—	—	—	—	—	—	—
	7.5-HP Oversized Motor & Drive																			

For Standard Evaporator Fan Speed (RPM), reference Table 50.
For Standard Motor & Low Static Drive Accessory Fan Speed (RPM), reference Table 51.
For Oversized Evaporator Fan Speed (RPM), reference Table 53.
Fan motor heat (MBH) = 3.15 x Fan BHP.
Notes:
Data includes pressure drop due to standard filters and wet coils. No accessories or options are included in pressure drop data.
Refer to Table 54 to determine additional static pressure drop due to other options/accessories.
Factory supplied motors, in commercial equipment, are definite purpose motors, specifically designed and tested to operate reliably and continuously at all cataloged conditions. Using the full horsepower range of our fan motors as shown in our tabular data will not result in nuisance tripping or premature motor failure. Our product's warranty will not be affected.
*For 4000, 4800 and 5600 CFM, unit applications below 320 CFM/Ton are only applicable to TCD models only (No Gas Heat). See below for restrictions.

- Electric heaters restricted on applications below 320 CFM/Ton.
- Dehumidification (Hot Gas Reheat) or TXV with Frostat and Crankcase Heaters are required on applications below 320 CFM/Ton.

(i) Field Supplied Motor Sheave IVP34 Required. Field Supplied Belt may be necessary.
(ii) 5-HP Standard Motor & High Static Drive.
(iii) 7.5-HP Standard Motor with Field Supplied Motor Sheave IPV50 required. Field Supplied Belt may be necessary.

Table 46. Evaporator Fan Performance 20 Tons with Gas Heat YC*241 Standard or TXV Refrigeration System Downflow or Horizontal

	External Static Pressure (Inches of Water)																			
	.10		.20		.30		.40		.50		.60		.70		.80		.90		1.00	
CFM	RPM	BHP	RPM	BHP	RPM	BHP	RPM	BHP	RPM	BHP	RPM	BHP	RPM	BHP	RPM	BHP	RPM	BHP	RPM	BHP
	5-HP Standard Motor & Field Supplied Low Static Drive(i)										**5-HP Standard Motor & Drive**									
6400	527	1.76	558	1.96	586	2.13	611	2.28	635	2.45	660	2.62	684	2.82	709	3.02	733	3.22	756	3.41
7200	585	2.44	614	2.67	640	2.88	664	3.06	686	3.24	708	3.42	729	3.61	751	3.82	773	4.04	795	4.26
8000	643	3.29	670	3.54	965	3.79	718	4.01	739	4.21	759	4.41	778	4.61	798	4.82	817	5.04	837	5.27
8800	702	4.33	727	4.59	750	4.87	772	5.13	792	5.37	811	5.60	830	5.81	848	6.03	866	6.25	883	6.48
9600	761	5.56	784	5.85	807	6.15	827	6.45	847	6.73	865	6.99	883	7.23	900	7.46	916	7.70	933	7.94
	7.5-HP Oversized Motor w/Field Supplied Sheave(ii)										**7.5-HP Oversized Motor & Drive**									

Continued

	External Static Pressure (Inches of Water)																			
	1.10		1.20		1.30		1.40		1.50		1.60		1.70		1.80		1.90		2.00	
CFM	RPM	BHP	RPM	BHP	RPM	BHP	RPM	BHP	RPM	BHP	RPM	BHP	RPM	BHP	RPM	BHP	RPM	BHP	RPM	BHP
	5-HP Standard Motor & Drive						**5-HP Standard Motor & High Static Drive Accessory**													
6400	779	3.62	802	3.83	852	4.05	846	4.27	868	4.49	889	4.72	909	4.96	929	5.20	949	5.45	968	5.71
7200	816	4.49	837	4.71	857	4.94	878	5.17	898	5.41	919	5.65	938	5.90	958	6.14	978	6.38	999	6.63
8000	857	5.57	876	5.76	896	6.01	915	6.26	933	6.51	952	6.76	970	7.01	989	7.26	—	—	—	—
8800	901	6.73	919	6.98	937	7.25	955	7.52	973	7.80	991	8.07	—	—	—	—	—	—	—	—
9600	949	8.19	965	8.44	—	—	—	—	—	—	—	—	—	—	—	—	—	—	—	—
	7.5-HP Oversized Motor & Drive																			

For Standard Evaporator Fan Speed (RPM), reference Table 50.
For Standard Motor & Low Static Drive Accessory Fan Speed (RPM), reference Table 51.
For Oversized Evaporator Fan Speed (RPM), reference Table 53.
Fan motor heat (MBH) = 3.15 x Fan BHP.
Notes:
Data includes pressure drop due to standard filters and wet coils. No accessories or options are included in pressure drop data.
Refer to Table 54 to determine additional static pressure drop due to other options/accessories.
Factory supplied motors, in commercial equipment, are definite purpose motors, specifically designed and tested to operate reliably and continuously at all cataloged conditions. Using the full horsepower range of our fan motors as shown in our tabular data will not result in nuisance tripping or premature motor failure. Our product's warranty will not be affected.

(i) Field Supplied Fan Sheave BK190 required. Field Supplied Belt may be necessary.
(ii) Motor Sheave IVP50 required. Field Supplied Belt may be necessary.

Table 47. Evaporator Fan Performance 20 Tons with Gas Heat Y*D241 Dehumidification (Hot Gas Reheat Option) Downflow

	External Static Pressure (Inches of Water)																			
	.10		.20		.30		.40		.50		.60		.70		.80		.90		1.00	
CFM	RPM	BHP	RPM	BHP	RPM	BHP	RPM	BHP	RPM	BHP	RPM	BHP	RPM	BHP	RPM	BHP	RPM	BHP	RPM	BHP
	5-HP Standard Motor & Field Supplied Low Static Drive[i]										**5-HP Standard Motor & Drive**									
6400	546	1.92	576	2.14	603	2.33	629	2.51	654	2.70	677	2.89	700	3.08	722	3.28	745	3.48	767	3.67
7200	607	2.67	634	2.92	659	3.16	683	3.36	707	3.56	728	3.77	749	3.98	770	4.20	791	4.42	811	4.64
8000	668	3.60	693	3.87	717	4.15	739	4.40	761	4.63	781	4.84	801	5.07	821	5.31	840	5.55[ii]	858	5.80
8800	730	4.74	753	5.03	775	5.33	796	5.62	816	5.90	836	6.14	855	6.39	873	6.63	891	6.89	909	7.16
9600	792	6.10	814	6.41	834	6.73	854	7.06	873	7.38	891	7.68	909	7.95	927	8.20	944	8.47	—	—
	7.5-HP Oversized Motor & Field Supplied Low Static Drive[iii]												**7.5-HP Oversized Motor & Drive**							

Continued

	External Static Pressure (Inches of Water)																			
	1.10		1.20		1.30		1.40		1.50		1.60		1.70		1.80		1.90		2.00	
CFM	RPM	BHP	RPM	BHP	RPM	BHP	RPM	BHP	RPM	BHP	RPM	BHP	RPM	BHP	RPM	BHP	RPM	BHP	RPM	BHP
	5-HP Standard Motor & Drive						**5-HP Standard Motor & High Static Drive Accessory**													
6400	789	3.88	809	4.08	830	4.30	851	4.53	871	4.75	890	4.98	910	5.24	929	5.50	948	5.75	965	6.00
7200	830	4.86	850	5.09	870	5.31	888	5.54	908	5.78	926	6.02	944	6.25	962	6.51	980	6.76	998	7.04
8000	877	6.04	895	6.28	913	6.53	930	6.77	947	7.02	965	7.28	983	7.53	999	7.78	1016	8.05	1033	8.32[iv]
8800	925	7.42	942	7.68	959	7.96	975	8.22	992	8.50	—	—	—	—	—	—	—	—	—	—
9600	—	—	—	—	—	—	—	—	—	—	—	—	—	—	—	—	—	—	—	—
	7.5-HP Oversized Motor & Drive																			

For Standard Evaporator Fan Speed (RPM), reference Table 50.
For Standard Motor & Low Static Drive Accessory Fan Speed (RPM), reference Table 51.
For Oversized Evaporator Fan Speed (RPM), reference Table 53.
Fan motor heat (MBH) = 3.15 x Fan BHP.
Notes:
Data includes pressure drop due to standard filters and wet coils. No accessories or options are included in pressure drop data.
Refer to Table 54 to determine additional static pressure drop due to other options/accessories.
Factory supplied motors, in commercial equipment, are definite purpose motors, specifically designed and tested to operate reliably and continuously at all cataloged conditions. Using the full horsepower range of our fan motors as shown in our tabular data will not result in nuisance tripping or premature motor failure. Our product's warranty will not be affected.

(i) Field Supplied Fan Sheave BK190 required. Field Supplied Belt may be necessary.
(ii) 5-HP Standard Motor & High Static Drive Accessory.
(iii) Motor Sheave IVP50 required. Field Supplied Belt may be necessary.
(iv) 7.5-HP Oversized Motor & Field Supplied High Static Drive.

Table 48. Evaporator Fan Performance 25 Tons with Optional Electric Heat TC*301C Standard Refrigeration or TXV System Downflow or Horizontal

	External Static Pressure (Inches of Water)																			
	.10		.20		.30		.40		.50		.60		.70		.80		.90		1.00	
CFM	RPM	BHP	RPM	BHP	RPM	BHP	RPM	BHP	RPM	BHP	RPM	BHP	RPM	BHP	RPM	BHP	RPM	BHP	RPM	BHP
	7.5-HP Standard Motor & Field Supplied Extra Low Static Drive											**7.5-HP Standard Motor & Low Static Drive Accessory**								
5000*	—	—	—	—	—	—	—	—	—	—	576	1.56	606	1.71	635	1.88	663	2.05	690	2.22
6500*	—	—	—	—	576	2.11	601	2.27	625	2.43	649	2.59	674	2.78	698	2.97	722	3.18	746	3.38
7000*	—	—	579	2.32	608	2.54	633	2.73	656	2.89	678	3.06	700	3.25	723	3.44	745	3.65	768	3.87
7500*	582	2.59	611	2.78	640	3.02	665	3.24	687	3.43	708	3.61	729	3.79	749	3.98	770	4.19	792	4.41
8000	616	3.07	645	3.31	672	3.56	696	3.80	719	4.02	739	4.22	759	4.41	778	4.60	797	4.81	817	5.03
8500	650	3.66	678	3.90	704	4.16	728	4.43	750	4.68	771	4.90	790	5.10	808	5.31	826	5.52	844	5.74
9000	685	4.31	712	4.56	737	4.83	760	5.12	782	5.39	802	5.65	821	5.88	839	6.09	856	6.30	873	6.53
9500	721	5.04	746	5.30	770	5.58	792	5.88	814	6.18	834	6.46	853	6.72	870	6.96	887	7.18	903	7.41
10000	756	5.85	780	6.12	803	6.41	825	6.72	846	7.04	866	7.35	884	7.64	902	7.90	918	8.14	934	8.38
10500	791	6.74	814	7.03	836	7.33	858	7.64	878	7.98	898	8.31	916	8.62	—	—	—	—	—	—
11000	827	7.71	849	8.02	870	8.33	891	8.63	—	—	—	—	—	—	—	—	—	—	—	—
	7.5-HP Standard Motor & Drive								**7.5-HP Standard Motor & High Static Drive Accessory**											

Continued

	External Static Pressure (Inches of Water)									
	1.10		1.20		1.30		1.40		1.50	
CFM	RPM	BHP	RPM	BHP	RPM	BHP	RPM	BHP	RPM	BHP
	7.5-HP Standard Motor & Drive									
5000*	716	2.41	741	2.60	765	2.80	789	3.00	812	3.20
6500*	769	3.59	792	3.80	814	4.01	836	4.22	857	4.44
7000*	790	4.09	812	4.31	833	4.53	854	4.76	875	4.99
7500*	813	4.65	833	4.88	854	5.12	874	5.36	894	5.59
8000	837	5.26	857	5.51	876	5.76	896	6.01	915	6.26
8500	863	5.97	881	6.21	900	6.46	919	6.73	937	6.99
9000	890	6.76	908	7.00	925	7.25	943	7.52	961	7.79
9500	919	7.64	936	7.88	952	8.13	969	8.40	985	8.67
10000	949	8.62	—	—	—	—	—	—	—	—
10500	—	—	—	—	—	—	—	—	—	—
11000	—	—	—	—	—	—	—	—	—	—
	7.5-HP Standard Motor & High Static Drive Accessory									

For Standard Evaporator Fan Speed (RPM), reference Table 50.
For Standard Motor & Low Static Drive Accessory Fan Speed (RPM), reference Table 51.
For Oversized Evaporator Fan Speed (RPM), reference Table 53.
Fan motor heat (MBH) = 3.15 x Fan BHP.
Notes:
Data includes pressure drop due to standard filters and wet coils. No accessories or options are included in pressure drop data. Refer to Table 54 to determine additional static pressure drop due to other options/accessories.
Factory supplied motors, in commercial equipment, are definite purpose motors, specifically designed and tested to operate reliably and continuously at all cataloged conditions. Using the full horsepower range of our fan motors as shown in our tabular data will not result in nuisance tripping or premature motor failure. Our product's warranty will not be affected.

*For 5000, 6500, 7000 and 7500 CFM, unit applications below 320 CFM/Ton are only applicable to TCD models only (No Gas Heat). See below for restrictions.

- Electric heaters restricted on applications below 320 CFM/Ton.
- Dehumidification (Hot Gas Reheat) or TXV with Frostat and Crankcase Heaters are required on applications below 320 CFM/Ton.

Table 49. Evaporator Fan Performance 25 Tons with Gas Heat YC*301C Standard Refrigeration or TXV System Downflow or Horizontal

	External Static Pressure (Inches of Water)																			
	.10		.20		.30		.40		.50		.60		.70		.80		.90		1.00	
CFM	RPM	BHP	RPM	BHP	RPM	BHP	RPM	BHP	RPM	BHP	RPM	BHP	RPM	BHP	RPM	BHP	RPM	BHP	RPM	BHP
	7.5-HP Standard Motor & Low Static Drive Accessory										**7.5-HP Standard Motor Drive**									
8000	643	3.29	670	3.54	695	3.79	718	4.01	739	4.21	759	4.41	778	4.61	798	4.82	817	5.04	837	5.27
8500	680	3.92	705	4.18	729	4.44	752	4.69	772	4.92	792	5.13	810	5.33	829	5.55	847	5.77	865	6.00
9000	717	4.61	741	4.89	764	5.17	786	5.44	806	5.69	825	5.92	843	6.14	861	6.36	878	6.59	895	6.83
9500	754	5.39	777	5.68	799	5.98	820	6.27	840	6.55	859	6.80	876	7.04	893	7.27	910	7.50	926	7.74
10000	791	6.26	813	6.56	835	9.87	855	7.18	874	7.48	893	7.76	910	8.02	926	8.27	942	8.51	—	—
10500	828	7.21	850	7.52	870	7.85	890	8.18	909	8.50	—	—	—	—	—	—	—	—	—	—
11000	866	8.26	886	8.59	—	—	—	—	—	—	—	—	—	—	—	—	—	—	—	—
					7.5-HP Standard Motor & High Static Drive Accessory															

Continued

	External Static Pressure (Inches of Water)									
	1.10		1.20		1.30		1.40		1.50	
CFM	RPM	BHP	RPM	BHP	RPM	BHP	RPM	BHP	RPM	BHP
	7.5-HP Standard Motor & Drive									
8000	857	5.51	876	5.76	896	6.01	815	6.26	933	6.51
8500	884	6.24	903	6.50	921	6.76	940	7.03	958	7.30
9000	913	7.07	930	7.32	948	7.59	965	7.86	983	8.15
9500	943	7.99	959	8.25	976	8.51	—	—	—	—
10000	—	—	—	—	—	—	—	—	—	—
10500	—	—	—	—	—	—	—	—	—	—
11000	—	—	—	—	—	—	—	—	—	—
	7.5-HP Standard Motor & High Static Drive Accessory									

For Standard Evaporator Fan Speed (RPM), reference Table 50.
For Standard Motor & Low Static Drive Accessory Fan Speed (RPM), reference Table 51.
For Oversized Evaporator Fan Speed (RPM), reference Table Table 53.
Fan motor heat (MBH) = 3.15 x Fan BHP.
Notes:
Data includes pressure drop due to standard filters and wet coils. No accessories or options are included in pressure drop data. Refer to Table 54 to determine additional static pressure drop due to other options/accessories.
Factory supplied motors, in commercial equipment, are definite purpose motors, specifically designed and tested to operate reliably and continuously at all cataloged conditions. Using the full horsepower range of our fan motors as shown in our tabular data will not result in nuisance tripping or premature motor failure. Our product's warranty will not be affected.

Performance Data

Table 50. Standard Motor & Drive/Fan Speed (Rpm)

Tons	Unit Model Number	6 Turns Open	5 Turns Open	4 Turns Open	3 Turns Open	2 Turns Open	1 Turn Open	Closed
12½	T/YC*150D3,4,W, YC*151C3,4,W	640	680	720	760	800	840	N/A
	T/YC*150DK	705	756	806	857	907	957	N/A
15	T/YC*180B3,4,W	679	721	764	806	849	891	N/A
	T/YC*180BK	N/A	680	733	785	837	889	941
	T/YC*181C3,4,W	560	600	640	680	720	760	N/A
17½	T/YC*210C3,4,W	869	923	978	1032	1087	1141	N/A
	T/YC*210CK	869	324	978	1032	1087	1141	N/A
	T/YC*211C3,4,W	615	659	703	747	791	835	N/A
20	T/YC*240B3,4,W, YC*241C3,4,W	615	659	703	747	791	835	N/A
	T/YC*240BK	590	627	664	701	738	775	N/A
25	T/YC*300B3,4,W, YC*301C3,4,W	705	742	779	817	854	891	N/A
	T/YC*300BK	701	738	775	812	849	886	N/A

Factory set at 3 turns open.

Table 51. Standard Motor & Low Static Fan Drive

Tons	Unit Model Number	6 Turns Open	5 Turns Open	4 Turns Open	3 Turns Open	2 Turns Open	1 Turn Open	Closed
17½	T/YC*210C3,4,W	705	755	806	856	907	957	N/A
25	T/YC*300B3,4,W,301C3,4,W	594	631	668	705	742	779	N/A

Table 52. Standard Motor & High Static Drive Accessory Sheave/Fan Speed (Rpm)

Tons	Unit Model Number	6 Turns Open	5 Turns Open	4 Turns Open	3 Turns Open	2 Turns Open	1 Turn Open	Closed
12½	T/YC*151C3,4,W	807	857	908	958	1009	1059	N/A
15	T/YC*180B3,4,W	806	849	891	934	976	1019	N/A
	T/YC*181B3,4,W	640	680	720	760	800	840	N/A
17½	T/YC*211C3,4,W	835	879	923	967	1011	1055	N/A
20	T/YC*240B/241C3,4,W	835	879	923	967	1011	1055	N/A
25	T/YC*300B/301C3,4,W	816	853	890	928	965	1002	N/A

Table 53. Oversized Motor & Drive Fan Speed (Rpm)

Tons	Unit Model Number	Fan Sheave	5 Turns Open	4 Turns Open	3 Turns Open	2 Turns Open	1 Turn Open	Closed
12½	T/YC*150D,151C3,4,W	869	923	978	1032	1087	1141	N/A
15	T/YC*180B3,4,W	806	856	907	957	1008	1058	N/A
	T/YC*181C3,4,W	705	755	806	856	907	957	N/A
17½	T/YC*210C3,4,W	949	1008	1068	1127	1187	1246	N/A
	T/YC*211C3,4,W	816	853	890	928	965	1002	N/A
20	T/YC*240B3,4,W, YC*241C3,4,W	816	853	890	928	965	1002	N/A

Table 54. Static Pressure Drop Through Accessories (Inches Water Column)

Tons	Unit Model Number	CFM	Standard Filters[iii]	Through Reheat Coil	2" Pleated Filter[iv]	Economizer with OA/RA Dampers[i] 100% OA	100% RA	Electric Heater Accessory (kW)[ii] 5-12	14-27	36	54	72
12½	T/Y*150D,T/YC*151C	**2500	0.02	0.01	0.03	0.07	0.01	—	***	***	***	—
		4000	0.05	0.03	0.08	0.19	0.02	—	0.03	0.03	0.04	—
		5000	0.07	0.05	0.11	0.26	0.03	—	0.04	0.05	0.06	—
		6000	0.10	0.06	0.15	0.33	0.04	—	0.06	0.07	0.09	—
15	T/YC*180B	4800	0.07	—	0.10	0.25	0.03	—	0.04	0.04	0.05	—
		6000	0.10	—	0.15	0.33	0.04	—	0.06	0.07	0.08	—
		7200	0.15	—	0.19	0.40	0.05	—	0.09	0.10	0.12	—
	T/YCD181C	**3000	0.02	0.01	0.03	0.07	0.03	—	***	***	***	—
		4800	0.04	0.02	0.07	0.14	0.03	—	0.04	0.04	0.05	—
		6000	0.06	0.03	0.10	0.20	0.04	—	0.06	0.07	0.08	—
		7200	0.09	0.04	0.13	0.27	0.05	—	0.09	0.10	0.12	—
	T/YCH181C	4800	0.03	—	0.06	0.14	0.03	—	0.04	0.04	0.05	—
		6000	0.05	—	0.09	0.20	0.04	—	0.06	0.07	0.08	—
		7200	0.07	—	0.11	0.27	0.05	—	0.09	0.10	0.12	—
17½	T/YC*210C	5600	0.09	—	0.13	0.30	0.04	—	—	0.06	0.07	—
		7000	0.14	—	0.18	0.39	0.05	—	—	0.10	0.11	—
		8400	0.20	—	0.24	0.47	0.06	—	—	0.15	0.17	—
	T/YCD211C	**3500	0.02	—	0.03	0.09	0.03	—	—	***	***	***
		5600	0.06	—	0.08	0.18	0.04	—	—	0.05	0.06	0.07
		7000	0.09	—	0.11	0.26	0.04	—	—	0.08	0.09	0.11
		8400	0.12	—	0.14	0.35	0.06	—	—	0.12	0.13	0.16
	T/YCH211C	5600	0.05	—	0.08	0.18	0.04	—	—	0.05	0.06	0.07
		7000	0.07	—	0.11	0.26	0.04	—	—	0.08	0.09	0.11
		8400	0.10	—	0.14	0.35	0.06	—	—	0.12	0.13	0.16
20	T/YCD240B,241C	**4000	0.03	0.02	0.04	0.11	0.03	—	—	***	***	***
		6400	0.07	0.04	0.11	0.22	0.04	—	—	0.06	0.08	0.09
		8000	0.11	0.05	0.15	0.32	0.05	—	—	0.10	0.12	0.14
		9600	0.16	0.07	0.20	0.44	0.07	—	—	0.14	0.17	0.20
	T/YCH240B,241C	6400	0.06	—	0.10	0.22	0.04	—	—	0.06	0.08	0.09
		8000	0.09	—	0.13	0.32	0.05	—	—	0.10	0.12	0.14
		9600	0.13	—	0.17	0.44	0.07	—	—	0.14	0.17	0.20
25	T/YCD300B,301C	**5000	0.04	—	0.06	0.15	0.03	—	—	***	***	***
		7000	0.09	—	0.13	0.26	0.04	—	—	0.08	0.10	0.11
		9000	0.14	—	0.18	0.40	0.07	—	—	0.13	0.15	0.18
		11000	0.21	—	0.25	0.57	0.10	—	—	0.18	0.22	0.26
	T/YCH300B,301C	7000	0.07	—	0.11	0.26	0.04	—	—	0.08	0.10	0.11
		9000	0.11	—	0.15	0.40	0.07	—	—	0.13	0.15	0.18
		11000	0.17	—	0.22	0.60	0.10	—	—	0.18	0.22	0.26

(i) OA = Outside Air and RA = Return Air.
(ii) Nominal kW ratings at 240, 480, 600 volts.
(iii) Tested with: 2" filters 12½-25 tons.
(iv) Difference in pressure drop should be considered when utilizing optional 2” pleated filters.
* Indicates both downflow and horizontal units.
** For 2500, 3000, 3500, 4000, and 5000 CFM, unit applications below 320 CFM/Ton are only applicable to TCD models only (No Gas Heat). See below for restrictions.
***Heaters not permitted at airflows below 320 cfm/ton. Heaters only available on TC* units.

- Unit applications below 320 CFM/Ton are only applicable to TCD models only (No Gas Heat). See below for restrictions:
- Electric heaters restricted on applications below 320 CFM/Ton.
- Dehumidification (Hot Gas Reheat) or TXV with Frostat and Crankcase Heaters are required on applications below 320 CFM/Ton.

Table 55. Gas Fired Heating Capacities

Tons	Unit Model Number	Heating Input MBH[i]	Heating Output MBH[ii]	Air Temp. Rise, F
12½	YC*150D-L1, YC*151C-L1	150/100	122/81	10-40
	YC*150D-H1,YC*151C-H1	250/175	203/142	25-55
15	YC*180B-L1	250/175	203/142	25-55
	YC*180B-H1,YC*181C-H1	350/250	284/203	35-65
	YC*181C-L1	250/175	203/142	15-45
17½	YC*210C-L1, YC*211C-L1	250/175	203/142	15-45
	YC*210C-H1,YC*211C-H1	350/250	284/203	35-65
20	YC*240B-L1, YC*241C-L1	250/175	203/142	15-45
	YC*240B-H1, YC*241C-H1	400/300	324/243	25-55
25	YC*300B-L1, YC*301C-L1	250/175	203/142	15-45
	YC*300B-H1, YC*301C-H1	400/300	324/243	25-55

(i) For two stage heaters (input or output), Second stage is total heating capacity. Second Stage/First Stage.
(ii) For two stage heaters (input or output), Second stage is total heating capacity. Second Stage/First Stage.

Table 56. Auxiliary Electric Heat Capacity

		Total[i]			Stage1		Stage 2	
Tons	Unit Model Number.	kW Input[ii]	MBH Output	No. of Stages	kW Input	MBH Output	kW Input	MBH Output
12½-15	TC*150D3,D4,DW,DK	18.00	61.47	1	18.00	61.47	—	—
	TC*180B3,B4,BW,BK	27.00[iii]	92.15	2	9.00	30.72	18.00	61.43
	TC*151 or 181C3,C4,CW	36.00	122.94	2	18.00	61.47	18.00	61.47
		54.00	184.41	2	36.00	122.94	18.00	61.47
17½, 20, 25	TC*210C3,C4,CW,CK	36.00	122.94	2	18.00	61.47	18.00	61.47
	TC*240,300B3,B4,BW,BK	54.00	184.41	2	36.00	122.94	18.00	61.47
	TC*211, 241, 301C3,C4,CW	72.00[iv]	245.88	2	36.00	122.94	36.00	122.94

(i) Heaters are rated at 240v,380v,480v and 600v. For other than rated voltage, CAP= (voltage/rated voltage)^2 x rated cap.
(ii) For all input/output categories, does not include fan power or heat.
(iii) 27 kW heater can be used with TCD181C4, TCD211C4, TCD241C4 and TCD301C4 only. Cannot be used with oversized motor.
(iv) Not available on TC*210C.
*Indicates both downflow and horizontal units.

Table 57. Electric Heater Voltage Correction Factors (Applicable to Auxiliary Heat Capacity)

Nominal Voltage	Distribution Voltage	Capacity Multiplier
240	208	0.75
	230	0.92
	240	1.00
480	440	0.84
	460	0.94
	480	1.00
600	540	0.81
	575	0.92
	600	1.00

Table 58. Air Temperature Rise Across Electric Heaters (Degrees F)

kW	Stages	12½ Tons 5000 CFM Three Phase TC*150/151	15 Tons 6000 CFM Three Phase TC*180/181	17½ Tons 7000 CFM Three Phase TC*210/211	20 Tons 8000 CFM Three Phase TC*240/241	25 Tons 9000 CFM Three Phase TC*300/301
9.00	1	—	—	—	—	—
17.30	1	—	—	—	—	—
18.00	1	11.4	9.5	—	—	—
27.00	2	—	14.2**	12.2[i]**	10.7**	9.5**
36.00	2	22.8	19.0	16.3	14.2	12.6
54.00	2	34.1	28.5	24.4	21.3	19.0
72.00**	2	—	—	32.5	28.5	25.3

For minimum design airflow, see airflow performance table for each unit. To calculate temp rise at different airflow, use the following formula: Temp. rise across Electric Heater = kWx3414/1.08xCFM.

(i) Not available on TC*210 model.
* Indicates both downflow and horizontal units.
** 27 kW heater can be used with TCD181C4, TCD211C4, TCD241C4 and TCD301C4 only. Cannot be used with oversized motor.

Table 59. Hot Gas Reheat Temperature Rise[i], [ii]

		Leaving Evaporator Dry Bulb [F][iii]						
Tons	SCFM	35	40	45	50	55	60	65
12½	2500	23.4	23.8	25.0	26.9	29.5	32.9	37.0
	3000	21.4	21.6	22.5	24.0	26.0	28.7	31.9
	3500	19.5	19.7	20.4	21.5	23.1	25.2	27.7
	4000	17.8	18.1	18.6	19.6	20.9	22.5	24.5
	4500	16.3	16.7	17.3	18.1	19.2	20.5	22.1
	5000	14.9	15.5	16.2	17.1	18.0	19.2	20.4
	5500	13.5	14.4	15.3	16.2	17.2	18.1	19.1
	6000	12.1	13.4	14.6	15.7	16.7	17.6	18.3
Tons	SCFM	35	40	45	50	55	60	65
15	3000	34.4	36.7	38.9	41.2	43.5	45.8	48.1
	3600	29.3	31.2	33.1	35.0	36.9	38.8	40.8
	4200	25.4	27.0	28.6	30.2	31.9	33.5	35.1
	4800	22.3	23.7	25.1	26.5	27.9	29.3	30.7
	5400	19.9	21.2	22.4	23.7	24.9	26.2	27.4
	6000	18.0	19.1	20.3	21.4	22.5	23.7	24.8
	6600	16.4	17.5	18.6	19.6	20.7	21.7	22.8
	7200	15.1	16.1	17.1	18.1	19.1	20.1	21.1
Tons	SCFM	35	40	45	50	55	60	65
20	4000	22.0	22.5	23.6	25.4	27.7	30.6	34.0
	4800	19.1	19.8	20.9	22.3	24.0	26.1	28.5
	5600	16.6	17.4	18.4	19.5	20.9	22.4	24.0
	6400	14.7	15.5	16.3	17.2	18.2	19.3	20.6
	7200	13.5	14.1	14.7	15.4	16.2	17.0	17.9
	8000	12.9	13.2	13.7	14.2	14.8	15.5	16.2
	8800	12.5	12.9	13.3	13.7	14.2	14.8	15.4
	9600	12.4	12.8	13.1	13.5	13.9	14.5	15.0

(i) 70 deg OD Ambient Temperature.
(ii) For units with the Dehumidification (Hot Gas Reheat) option.
(iii) Temperature does not account for indoor fan heat.

Controls

ReliaTel™ Controlled Units

Zone Sensors are the building occupant's comfort control devices. They replace the conventional electro-mechanical thermostats. The following zone sensor options are available for Voyager units with ReliaTel control:

Differential Enthalpy

Replaces the standard dry bulb control with two enthalpy sensors that compare total heat content of the indoor air and outdoor air to determine the most efficient air source. This control option offers the highest level of comfort control, plus energy efficiency, available.

Differential Pressure Switches

This factory or field-installed option allows individual fan failure and dirty filter indication. The fan failure switch will disable all unit functions and "flash" the Service LED on the zone sensor. The dirty filter switch will light the Service LED on the zone sensor and will allow continued unit operation.

Digital Display Zone Sensor

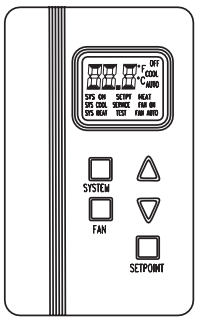

The Digital LCD (Liquid Crystal Display) zone sensor has the look and functionality of standard zone sensors. This sensor includes a digital display of set point adjustment and space temperature in F (Fahrenheit) or C (Celsius). Includes FAN and SYSTEM buttons (supports the service functions of the standard sensor). E-squared memory stores last programmed set points. Requires 24 VAC (Volts AC). This sensor should be utilized with ReliaTel™ controls.

Dual Thermistor Remote Zone Sensor

This sensor will allow the customer to reduce the total number of remote sensors to obtain space temperature averaging. This sensor should be utilized with ReliaTel controls.

Economizer Controls

The standard equipment offering is a fixed dry bulb changeover control. In addition, there are two optional controls, Enthalpy and Differential Enthalpy Control.

Enthalpy Control

Replaces the dry bulb control with a wet bulb changeover controller which has a fully adjustable set point. Enthalpy control offers a higher level of comfort control, along with energy savings potential, than the standard dry bulb control. This is due to the additional wet bulb sensing capability.

Integrated Comfort™ System

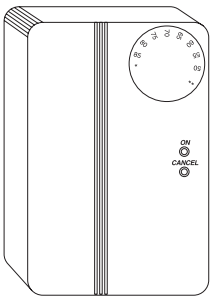

Sensor(s) available with optional temperature adjustment and override buttons to provide central control through a Trane Integrated Comfort™ system.

Manual Changeover

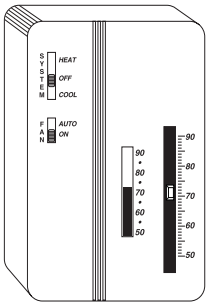

Heat, Cool or Off System Switch. Fan Auto or Off Switch. One temperature setpoint lever.

Manual/Automatic Changeover

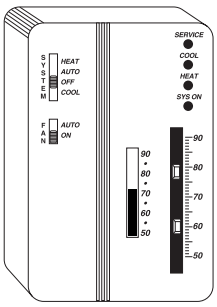

Auto, Heat, Cool or Off System Switch. Fan Auto or Off Switch. Two temperature setpoint levers. Optional Status Indication LED lights, System On, Heat, Cool, or Service.

Programmable Night Setback

Auto or manual changeover with seven-day programming. Keyboard selection of Heat, Cool, Fan, Auto, or On. All programmable sensors have System On, Heat, Cool, Service LED/ indicators as standard. Night Setback Sensors have one (1) Occupied, one (1) Un-occupied, and two (2) Override programs per day.

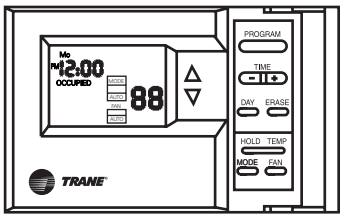

Remote Sensor

Sensor(s) available for all zone sensors to provide remote sensing capabilities.

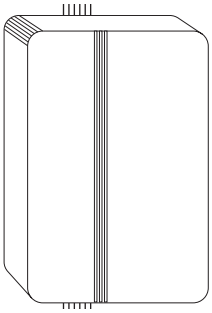

Remote Potentiometer

Minimum position setting of economizer can be remotely adjusted with this accessory.

Trane Communication Interface (TCI)

This factory or field-installed micro-processor interface allows the unit to communicate to Trane's Integrated Comfort™ system.

CO_2 Sensing

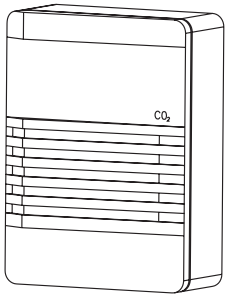

The CO_2 sensor shall have the ability to monitor space occupancy levels within the building by measuring the parts per million of CO_2 (Carbon Dioxide) in the air. As the CO_2 levels increase, the outside air damper modulates to meet the CO_2 space ventilation requirements. The CO_2 accessory shall be available as field installed.

Digital Display Programmable Thermostat (2H/2C)

Two Heat/Two Cool digital display thermostat. 7-day programmable stat with night setback shall be available.

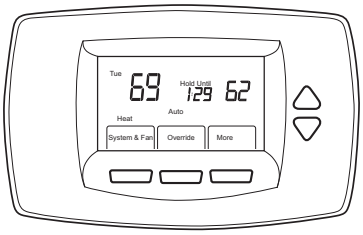

Touchscreen Programmable Thermostat (2H/2C)

Two Heat/Two Cool programmable thermostat with touch screen digital display. Menu-driven programming. Effortless set-up. Program each day separately with no need to copy multiple days. All programming can be done on one screen. Easy to read and use. Large, clear backlit digital display.

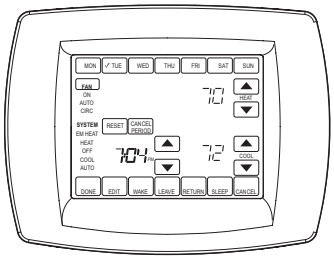

Digital Display Programmable Thermostat with Built-In Relative Humidity Sensing (3H/2C)

Three Heat/Two Cool digital display thermostat with built-in humidity control and display. This thermostat combines both humidity and dry bulb into one. Fully programmable with night setback.

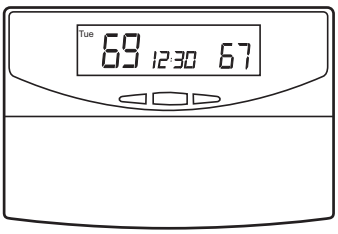

Digital Display Thermostat (3H/2C)

Three Heat, Two Cool digital display thermostat. Easy access battery replacement. Flip-out door for easy battery replacement without removing or disassembling the thermostat.

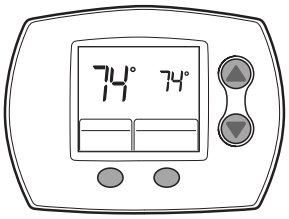

RA Remote Sensor

Return Air Remote Sensor which can be mounted in the return air duct to report return air temperature.

Room Remote Sensor

Space Remote Sensor which can be mounted on the wall to report/control from a remote location in the space.

Electrical Data

Table 60. Unit Wiring with Gas Heat or Cooling (No Electric Heat)

			Standard Indoor Fan Motor		Oversize Indoor Fan Motor	
Tons	Unit Model Number	Unit Operating Voltage Range	Minimum Circuit Ampacity[i]	Maximum Fuse Size or Maximum Circuit Breaker	Minimum Circuit Ampacity	Maximum Fuse Size or Maximum Circuit Breaker
12½	T/YC*150D3	187-253	63	80	69	80
	T/YC*150D4	414-506	33	40	36	40
	T/YC*150DW	518-633	26	30	28	35
	T/YC*150DK	342-418	43	50	—	—
15	T/YC*180B3	187-253	78	90	84	100
	T/YC*180B4	414-506	39	50	42	50
	T/YC*180BW	517-633	31	40	33	40
	T/YC*180BK	342-418	50	60	—	—
17½	T/YC*210C3	187-253	88	100	96	125
	T/YC*210C4	414-506	44	50	47	60
	T/YC*210CW	517-633	35	45	38	45
	T/YC*210CK	342-418	57	70	—	—
20	T/YC*240B3	187-253	100	125	107	125
	T/YC*240B4	414-506	50	60	54	60
	T/YC*240BW	517-633	40	45	43	50
	T/YC*240BK	342-418	65	80	—	—
25	T/YC*300B3	187-253	118	150	—	—
	T/YC*300B4	414-506	58	70	—	—
	T/YC*300BW	517-633	46	50	—	—
	T/YC*300BK	342-418	70	80	—	—

[i] For Standard and Oversized Indoor Fan Motor, values do not include power exhaust accessory.
* Indicates both downflow and horizontal units.

Table 61. Unit Wiring with Electric Heat (Single Point Connection) — Standard and Oversized Motor, Downflow & Horizontal

					Standard Indoor Motor		Oversize Indoor Motor	
Tons	Unit Model Number	Heater Model Number	Heater kW Rating[i]	Control Stages	MCA	Max Fuse Size or Max Circuit Breaker	MCA	Max Fuse Size or Max Circuit Breaker
			208/230 Volts Three Phase					
12½	TC*150D3	AYDHTRF318A/AYHHTRN318A	13.5/18.0	1	63/68	80/80	69/76	80/80
		AYDHTRF336A/AYHHTRN336A	27.0/36.0	2	108/122	110/125	115/130	125/150
		AYDHTRF354A/AYHHRTN354A	40.5/54.0	2	154/176	175/200	162/184	175/200
15	TC*180B3	AYDHTRK318A/AYHHTRN318A	13.5/18.0	1	78/78	100/100	84/84	100/100
		AYDHTRK336A/AYHHTRN336A	27.0/36.0	2	108/122	110/125	115/130	125/150
		AYDHTRK354A/AYHHTRN354A	40.5/54.0	2	154/176	175/200	162/184	175/200
17½	TC*210C3	AYDHTRL336A/AYHHTRQ336A	27.0/36.0	2	115/130	125/150	125/139	125/150
		AYDHTRL354A/AYHHTRQ354A	40.5/54.0	2	162/184	175/200	171/193	175/200
20	TC*240B3	AYDHTRL336A/AYHHTRN336A	27.0/36.0	2	115/130	125/150	125/139	125/150
		AYDHTRL354A/AYHHTRN354A	40.5/54.0	2	162/184	175/200	171/193	175/200
		AYDHTRK372A/AYHHTRN372A	54.0/72.0	2	209/238	225/250	218/247	225/250
25	TC*300B3	AYDHTRL336A/AYHHTRN336A	27.0/36.0	2	125/139	150/150	—	—
		AYDHTRL354A/AYHHTRN354A	40.5/54.0	2	171/193	175/200	—	—
		AYDHTRK372A/AYHHTRN372A	54.0/72.0	2	218/247	225/250	—	—
			460 Volts Three Phase					
12½	TC*150D4	AYDHTRL418A/AYHHTRN418A	18.0	1	34	40	37	40
		AYDHTRK436A/AYHHTRN436A	36.0	2	61	70	64	70
		AYDHTRK454A/AYHHTRP454A	54.0	2	88	90	91	100
15	TC*180B4	AYDHTRL418A.AYHHTRN418A	18.0	1	393	50	42	50
		AYDHTRK436A/AYHHTRP436A	36.0	2	61	70	64	70
		AYDHTRK454A/AYHHTRP454A	54.0	2	88	90	91	100
17½	TC*210C4	AYDHTRL436A/AYHHTRQ436A	36.0	2	64	70	68	70
		AYDHTRL454A/AYHHTRQ454A	54.0	2	91	100	95	100
20	TC*240B4	AYDHTRL436A/AYHHTRN436A	36.0	2	64	70	68	70
		AYDHTRL454A/AYHHTRN454A	54.0	2	91	100	95	100
		AYDHTRK472A/AYHHTRN472A	72.0	2	118	125	123	125
25	TC*300B4	AYDHTRL436A/AYHHTRN436A	36.0	2	68	70	—	—
		AYDHTRL454A/AYHHTRN454A	54.0	2	95	100	—	—
		AYDHTRK472A/AYHHTRN472A	72.0	2	123	125	—	—
			575 Volts Three Phase					
12½	TC*150DW	AYDHTRKW18A/AYHHTRNW18A	18.0	1	27	30	30	35
		AYDHTRMW36A/AYHHTRPW36A	36.0	2	49	50	51	60
		AYDHTRKW54A/AYHHTRPW54A	54.0	2	70	70	73	80
15	TC*180BW	AYDHTRKW18A/AYHHTRNW18A	18.0	1	31	40	33	40
		AYDHTRMW36A/AYHHTRPW36A	36.0	2	49	50	51	60
		AYDHTRKW54A/AYHHTRPW54A	54.0	2	70	70	73	80
17½	TC*210CW	AYDHTRMW36A/AYHHTRPW36A	36.0	2	51	60	55	60
		AYDHTRLW54A/AYHHTRQW54A	54.0	2	73	80	77	80
20	TC*240BW	AYDHTRMW36A/AYHHTRMW36A	36.0	2	51	60	55	60
		AYDHTRLW54A/AYHHTRNW54A	54.0	2	73	80	77	80
		AYDHTRKW72A/AYHHTRNW72A	72.0	2	95	100	98	100
25	TC*300BW	AYDHTRMW36A/AYHHTRMW36A	36.0	2	55	60	—	—
		AYDHTRLW54A/AYHHTRNW54A	54.0	2	77	80	—	—
		AYDHTRKW72A/AYHHTRNW72A	72.0	2	98	100	—	—

Table 61. (continued) Unit Wiring with Electric Heat (Single Point Connection) — Standard and Oversized Motor, Downflow & Horizontal

					Standard Indoor Motor		Oversize Indoor Motor	
Tons	Unit Model Number	Heater Model Number	Heater kW Rating	Control Stages	MCA	Max Fuse Size or Max Circuit Breaker	MCA	Max Fuse Size or Max Circuit Breaker
			380 Volts Three Phase					
12½	TC*150DK	AYDHTRL418A/AYHHTRL418A	11.3	1	43	50	—	—
		AYDHTRK436A/AYHHTRK436A	22.6	2	55	60	—	—
		AYDHTRK454AAYHHTRK454A	33.8	2	76	80	—	—
15	TC*180BK	AYDHTRL418A/AYHHTRL418A	11.3	1	50	60	—	—
		AYDHTRK436A/AYHHTRK436A	22.6	2	55	60	—	—
		AYDHTRK454A/AYHHTRK454A	33.8	2	76	80	—	—
17½	TC*210CK	AYDHTRL436A/AYHHTRL436A	22.6	2	60	70	—	—
		AYDHTRL454A/AYHHTRL454A	33.8	2	81	90	—	—
20	TC*240BK	AYDHTRL436A/AYDHTRL436A	22.6	2	65	80	—	—
		AYDHTRL454A/AYDHTRL454A	33.8	2	81	90	—	—
		AYDHTRK472A/AYDHTRK472A	45.1	2	103	110	—	—
25	TC*300BK	AYDHTRL436A/AYDHTRL436A	22.6	2	70	80	—	—
		AYDHTRL454A/AYDHTRL454A	33.8	2	81	90	—	—
		AYDHTRK472A/AYDHTRK472A	45.1	2	103	100	—	—

(i) Heater kW ratings are at 380V for 380 unit.
* Indicates both downflow and horizontal units.

Table 62. Electrical Characteristics — Compressor Motor and Condenser Motor — 60 Cycle

		Compressor Motors							Condenser Fan Motors				
							Amps(i)					Amps	
Tons	Unit Model Number	No.	Volts	Phase	HP(ii)	RPM	RLA	LRA	No.	Phase	HP	FLA	LRA
12½	T/YC*150D3	2	208-230	3	6.00	3450	20.4	156	2	1	.50	3.2	8.8
	T/YC*150D4	2	460	3	6.00	3450	10.8	75	2	1	.50	1.6	3.8
	T/YC*150DW	2	575	3	6.00	3450	8.3	54	2	1	.50	1.3	3.2
	T/YC*150DK	2	380	3	6.0	3450	13.1	70	2	1	.50	1.9	5.2
15	T/YC*180B3	2	208-230	3	9.30/5.10	3450	31.9/20.7	253/128	2	1	.50	3.2	8.8
	T/YC*180B4	2	460	3	9.30/5.10	3450	16.3/10.0	113/63	2	1	.50	1.6	3.8
	T/YC*180BW	2	575	3	9.30/5.10	3450	13.1/7.4	85/49	2	1	.50	1.3	3.2
	T/YC*180BK	2	380	3	9.3/5.1	3450	19.7/12.1	125/64	2	1	.50	1.9	5.2
17½	T/YC*210C3	2	208-230	3	9.3/6.0	3450	31.5/20.8	253/156	2	1	1.00	5.5	18.3
	T/YC*210C4	2	460	3	9.3/6.0	3450	15.9/10.0	113/75	2	1	1.00	2.9	9.3
	T/YC*210CW	2	575	3	9.3/6.0	3450	12.8/8.2	85/54	2	1	1.00	2.0	5.7
	T/YC*210CK	2	380	3	9.3/6.0	3450	19.2/12.1	125/70	2	1	1.00	3.5	8.5
20	T/YC*240B3	2	208-230	3	9.30	3450	31.7	253	2	1	1.00	5.5	18.3
	T/YC*240B4	2	460	3	9.30	3450	16.2	113	2	1	1.00	2.9	9.3
	T/YC*240BW	2	575	3	9.30	3450	13.0	85	2	1	1.00	2.0	5.7
	T/YC*240BK	2	380	3	9.3	3450	19.6	125	2	1	1.00	3.5	8.5
25	T/YC*300B3	2	208-230	3	10.00	3450	36.6	278	2	1	1.00	5.5	18.3
	T/YC*300B4	2	460	3	10.00	3450	17.9	124	2	1	1.00	2.9	9.3
	T/YC*300BW	2	575	3	10.00	3450	14.9	92	2	1	1.00	2.0	5.7
	T/YC*300BK	2	380	3	10.0	3450	21.7	137	2	1	1.00	3.5	8.5

(i) For Compressor Motor and Condenser Fan Motors: Amp draw for each motor; multiply value by number of motors to determine total amps.
(ii) HP for each compressor.

Table 63. Electrical Characteristics — Evaporator Fan Motor — 60 Cycle — Standard and Oversized Motor

		Standard Evaporator Fan Motor						Oversized Evaporator Fan Motor					
						Amps						Amps	
Tons	Unit Model Number	No.	Volts	Phase	HP	FLA	LRA	No.	Volts	Phase	HP	FLA	LRA
12½	T/YC*150D3	1	208-230	3	3.00	10.6	81.0	1	208-230	3	5.00	16.7	109.8
	T/YC*150D4	1	460	3	3.00	4.8	40.5	1	460	3	5.00	7.6	54.9
	T/YC*150DW	1	575	3	3.00	3.9	31.0	1	575	3	5.00	6.1	41.6
	T/YC*150DK	1	380	3	5.0	9.2	66.5	—	—	—	—	—	—
15	T/YC*180B3	1	208-230	3	3.00	10.6	81.0	1	208-230	3	5.00	16.7	109.8
	T/YC*180B4	1	460	3	3.00	4.8	40.5	1	460	3	5.00	7.6	54.9
	T/YC*180BW	1	575	3	3.00	3.9	31.0	1	575	3	5.00	6.1	41.6
	T/YC*180BK	1	380	3	5.0	9.2	66.5	—	—	—	—	—	—
17½	T/YC*210C3	1	208-230	3	5.00	16.7	109.8	1	208-230	3	7.50	24.2	120.4
	T/YC*210C4	1	460	3	5.00	7.6	54.9	1	460	3	7.50	11.0	74.0
	T/YC*210CW	1	575	3	5.00	6.1	41.6	1	575	3	7.50	9.0	60.0
	T/YC*210CK	1	380	3	7.5	13.3	83.5	—	—	—	—	—	—
20	T/YC*240B3	1	208-230	3	5.00	16.7	109.8	1	208-230	3	7.50	24.2	120.4
	T/YC*240B4	1	460	3	5.00	7.6	54.9	1	460	3	7.50	11.0	74.0
	T/YC*240BW	1	575	3	5.00	6.1	41.6	1	575	3	7.50	9.0	60.0
	T/YC*240BK	1	380	3	7.5	13.3	83.5	—	—	—	—	—	—
25	T/YC*300B3	1	208-230	3	7.50	24.2	120.4	—	—	—	—	—	—
	T/YC*300B4	1	460	3	7.50	11.0	74.0	—	—	—	—	—	—
	T/YC* 300BW	1	575	3	7.50	9.0	60.0	—	—	—	—	—	—
	T/YC*300BK	1	380	3	7.5	13.3	83.5	—	—	—	—	—	—

* Indicates both downflow and horizontal units.

Table 64. Electrical Characteristics — Combustion Blower Motor (Gas/Electric)

Unit Model Number	Heat	Heating Stages	HP	RPM[(i)]	Volts	Phase	Amps FLA	Amps LRA
YC*150	Low	2	1/20	3500/2800	208-230	1	0.5	0.78
YC*180, 210, 240-300	Low	2	1/10	3500/2800	208-230	1	0.8	2.00

(i) High/Low Speed.
* Indicates both downflow and horizontal units.

Table 65. Electrical Characteristics — Power Exhaust (Cooling and Gas/Electric)

Tons	Volts	Phase	HP	RPM	Amps FLA	Amps LRA
12½-25	208-230	1	3/4	1040	6.6	13.5
12½-25	460	1	3/4	1040	3.2	8.4
12½-25	575	1	3/4	1040	2.1	5.2

Table 66. Unit Wiring with Cooling (No Electric Heat) or Gas Heat — Standard Refrigeration System

			Standard Indoor Fan Motor		Oversize Indoor Fan Motor	
Tons	Unit Model Number	Unit Operating Voltage Range	Minimum Circuit Ampacity[i]	Maximum Fuse Size or Maximum Circuit Breaker	Minimum Circuit Ampacity	Maximum Fuse Size or Maximum Circuit Breaker
12½	T/YC*151C3	187-253	64	80	70	90
	T/YC*151C4	414-506	31	40	34	40
	T/YC*151CW	517-633	25	30	28	35
15	T/YC*181C3	187-253	74	90	80	100
	T/YC*181C4	414-506	36	50	38	50
	T/YC*181CW	517-633	29	40	31	40
17½	T/YC*211C3	187-253	91	110	98	125
	T/YC*211C4	414-506	44	60	48	60
	T/YC*211CW	517-633	35	45	38	50
20	T/YC*241C3	187-253	99	125	107	125
	T/YC*241C4	414-506	50	60	54	60
	T/YC*241CW	517-633	40	50	43	50
25	T/YC*301C3	187-253	120	150	N/A	N/A
	T/YC*301C4	414-506	58	70	N/A	N/A
	T/YC*301CW	517-633	47	60	N/A	N/A

[i] For Standard and Oversized Indoor Fan Motor, values do not include power exhaust accessory.
* Indicates both downflow and horizontal units.

Table 67. Unit Wiring with Cooling (No Electric Heat) or Gas Heat — TXV/Face-Split Evaporator Coil (Downflow Only)

			Standard Indoor Fan Motor		Oversize Indoor Fan Motor	
Tons	Unit Model Number	Unit Operating Voltage Range	Minimum Circuit Ampacity[i]	Maximum Fuse Size or Maximum Circuit Breaker	Minimum Circuit Ampacity	Maximum Fuse Size or Maximum Circuit Breaker
12½	T/YCD151C3	187-253	59	70	65	80
	T/YCD151C4	414-506	30	35	32	40
	T/YCD151CW	517-633	24	30	26	30
15	T/YCD181C3	187-253	74	90	80	90
	T/YCD181C4	414-506	37	50	39	50
	T/YCD181CW	517-633	30	40	32	40
17½	T/YCD211C3	187-253	91	125	99	125
	T/YCD211C4	414-506	45	60	49	60
	T/YCD211CW	517-633	36	45	39	50
20	T/YCD241C3	187-253	99	125	107	125
	T/YCD241C4	414-506	51	60	54	60
	T/YCD241CW	517-633	40	50	43	50
25	T/YCD301C3	187-253	117	150	N/A	N/A
	T/YCD301C4	414-506	57	70	N/A	N/A
	T/YCD301CW	517-633	46	50	N/A	N/A

[i] For Standard and Oversized Indoor Fan Motor, values do not include power exhaust accessory.

Table 68. Unit Wiring with Cooling (No Electric Heat) or Gas Heat — Dehumidification (Hot Gas Reheat) Option (Downflow Only)

			Standard Indoor Fan Motor		Oversize Indoor Fan Motor	
Tons	Unit Model Number	Unit Operating Voltage Range	Minimum Circuit Ampacity[i]	Maximum Fuse Size or Maximum Circuit Breaker	Minimum Circuit Ampacity	Maximum Fuse Size or Maximum Circuit Breaker
12½	T/YCD151C3	187-253	59	70	65	80
	T/YCD151C4	414-506	30	35	32	40
	T/YCD151CW	517-633	24	30	26	30
15	T/YCD181C3	187-253	71	90	77	100
	T/YCD181C4	414-506	36	45	39	50
	T/YCD181CW	517-633	28	35	30	40
20	T/YCD241C3	187-253	98	125	105	125
	T/YCD241C4	414-506	50	60	53	60
	T/YCD241CW	517-633	39	50	42	50

[i] For Standard and Oversized Indoor Fan Motor, values do not include power exhaust accessory.

Table 69. Unit Wiring with Electric Heat (Single Point Connection) — Standard Refrigeration System (Downflow and Horizontal)

					Standard Indoor Motor		Oversize Indoor Motor	
Tons	Unit Model Number	Heater Model Number	Heater kW Rating	Control Stages	MCA	Max Fuse Size or Max Circuit Breaker	MCA	Max Fuse Size or Max Circuit Breaker[i]
			208/230 Volts Three Phase					
12½	TC*151C3	AYDHTRK318A/AYHHTRN318A	13.5/18.0	1	64/68	80/80	70/76	90/90
		AYDHTRK336A/AYHHTRP336A	27.0/36.0	2	108/122	110/125	115/130	125/150
		AYDHTRK354A/AYHHTRP354A	40.5/54.0	2	154/176	175/200	162/184	175/200
15	TC*181C3	AYDHTRK318A/AYHHTRM318A	13.5/18.0	1	74/74	100/100	80/80	100/100
		AYDHTRK336A/AYHHTRM336A	27.0/36.0	2	108/122	110/125	115/130	125/150
		AYDHTRK354A/AYHHTRM354A	40.5/54.0	2	154/176	175/200	162/184	175/200
17½	TC*211C3	AYDHTRL336A/AYHHTRN336A	27.0/36.0	2	115/130	125/150	125/139	125/150
		AYDHTRL354A/AYHHTRN354A	40.5/54.0	2	162/184	175/200	171/193	175/200
		AYDHTRK372A/AYHHTRN372A	54.0/72.0	2	209/238	225/250	218/247	225/250
20	TC*241C3	AYDHTRL336A/AYHHTRN336A	27.0/36.0	2	115/130	125/150	125/139	125/150
		AYDHTRL354A/AYHHTRN354A	40.5/54.0	2	162/184	175/200	171/193	175/200
		AYDHTRK372A/AYHHTRN372A	54.0/72.0	2	209/238	225/250	218/247	225/250
25	TC*301C3	AYDHTRL336A/AYHHTRN336A	27.0/36.0	2	125/139	150/150	—	—
		AYDHTRL354A/AYHHTRN354A	40.5/54.0	2	171/193	175/200	—	—
		AYDHTRK372A/AYHHTRN372A	54.0/72.0	2	218/247	225/250	—	—
			460 Volts Three Phase					
12½	TC*151C4	AYDHTRL418A/AYHHTRN418A	18.0	1	34	40	37	40
		AYDHTRK436A/AYHHTRP436A	36.0	2	61	70	64	70
		AYDHTRK454A/AYHHTRP454A	54.0	2	88	90	91	100
15	TC*181C4	AYDHTRL418A/AYHHTRM418A	18.0	1	36	50	38	50
	TCD181C4	AYDHTRK427A	27.0	2	47	50	—	—
	TC*181C4	AYDHTRK436A/AYHHTRM436A	36.0	2	61	70	64	70
		AYDHTRK454A/AYHHTRM454A	54.0	2	88	90	91	100
17½	TCD211C4	AYDHTRL427A	27.0	2	51	60	—	—
	TC*211C4	AYDHTRL436A/AYHHTRN436A	36.0	2	64	70	68	70
		AYDHTRL454A/AYHHTRN454A	54.0	2	91	100	95	100
		AYDHTRK472A/AYHHTRN472A	72.0	2	118	125	123	125
20	TCD241C4	AYDHTRL427A	27.0	2	51	60	—	—
	TC*241C4	AYDHTRL436A/AYHHTRN436A	36.0	2	64	70	68	70
		AYDHTRL454A/AYHHTRN454A	54.0	2	91	100	95	100
		AYDHTRK472A/AYHHTRN472A	72.0	2	118	125	123	125
25	TCD301C4	AYDHTRL427A	27.0	2	58	70	—	—
	TC*301C4	AYDHTRL436A/AYHHTRN436A	36.0	2	68	70	—	—
		AYDHTRL454A/AYHHTRN454A	54.0	2	95	100	—	—
		AYDHTRK472A/AYHHTRN472A	72.0	2	123	125	—	—
			575 Volts Three Phase					
12½	TC*151CW	AYDHTRKW18A/AYHHTRNW18A	18.0	1	27	30	30	35
		AYDHTRMW36A/AYHHTRPW36A	36.0	2	49	50	51	60
		AYDHTRKW54A/AYHHTRPW54A	54.0	2	70	70	73	80
15	TC*181CW	AYDHTRKW18A/AYHHTRMW18A	18.0	1	29	40	31	40
		AYDHTRMW36A/AYHHTRMW36A	36.0	2	49	50	31	40
		AYDHTRKW54A/AYHHTRMW54A	54.0	2	70	70	73	80
17½	TC*211CW	AYDHTRMW36A/AYHHTRMW36A	36.0	2	51	60	55	60
		AYDHTRLW54A/AYHHTRNW54A	54.0	2	73	80	77	80
		AYDHTRKW72A/AYHHTRNW72A	72.0	2	95	100	98	100
20	TC*241CW	AYDHTRMW36A/AYHHTRMW36A	36.0	2	51	60	55	60
		AYDHTRLW54A/AYHHTRNW54A	54.0	2	73	80	77	80
		AYDHTRKW72A/AYHHTRNW72A	72.0	2	95	100	98	100
25	TC*301CW	AYDHTRMW36A/AYHHTRMW36A	36.0	2	55	60	—	—
		AYDHTRLW54A/AYHHTRNW54A	54.0	2	77	80	—	—
		AYDHTRKW72A/AYHHTRNW72A	72.0	2	98	100	—	—

[i] Values do not include power exhaust accessory.
* Indicates both downflow and horizontal units.

Table 70. Unit Wiring with Electric Heat (Single Point Connection) — TXV/Face-Split Evaporator Coil or Dehumidification (Hot Gas Reheat) Refrigeration System (Downflow only)

					Standard Indoor Motor		Oversize Indoor Motor	
Tons	Unit Model Number	Heater Model Number[i]	Heater kW Rating	Control Stages	Control	Max Fuse Size or Max Circuit Breaker	MCA	Max Fuse Size or Max Circuit Breaker[ii]
			208/230 Volts Three Phase					
12½	TCD151C3	AYDHTRK318A	13.5/18.0	1	61/68	70/70	68/76	80/80
		AYDHTRK336A	27.0/36.0	2	108/122	110/125	115/130	125/150
		AYDHTRK354A	40.5/54.0	2	154/176	175/200	162/184	175/200
15	TCD181C3	AYDHTRK318A	13.5/18.0	1	74/74	100/100	80/80	90/90
		AYDHTRK336A	27.0/36.0	2	108/122	110/125	115/130	125/150
		AYDHTRK354A	40.5/54.0	2	154/176	175/200	162/184	175/200
	TCD181C3	*AYDHTRK318A	13.5/18.0	1	71/71	90/90	77/77	100/100
17½	TCD211C3	AYDHTRL336A	27.0/36.0	2	115/130	125/150	125/139	125/150
		AYDHTRL354A	40.5/54.0	2	162/184	175/200	171/193	175/200
		AYDHTRK372A	54.0/72.0	2	209/238	225/250	218/247	225/250
20	TCD241C3	AYDHTRL336A	27.0/36.0	2	115/130	125/150	125/139	125/150
		AYDHTRL354A	40.5/54.0	2	162/184	175/200	171/193	175/200
		AYDHTRK372A	54.0/72.0	2	209/238	225/250	218/247	225/250
25	TCD301C3	AYDHTRL336A	27.0/36.0	2	125/139	150/150	—	—
		AYDHTRL354A	40.5/54.0	2	171/193	175/200	—	—
		AYDHTRK372A	54.0/72.0	2	218/247	225/250	—	—
			460 Volts Three Phase					
12½	TCD151C4	AYDHTRL418A	18.0	1	34	35	37	40
		AYDHTRK436A	36.0	2	61	70	64	70
		AYDHTRK454A	54.0	2	88	90	91	100
15	TCD181C4	AYDHTRL418A	18.0	1	37	50	39	50
		AYDHTRK427A3	27.0	2	47	50	—	—
		AYDHTRK436A	36.0	2	61	70	64	70
		AYDHTRK454A	54.0	2	88	90	91	100
	TCD181C4	*AYDHTRL418A	18.0	1	36	45	39	50
17½	TCD211C4	AYDHTRL427A3	27.0	2	51	60	—	—
		AYDHTRL436A	36.0	2	64	70	68	70
		AYDHTRL454A	54.0	2	91	100	95	100
		AYDHTRK472A	72.0	2	118	125	123	125
20	TCD241C4	AYDHTRL427A3	27.0	2	51	60	—	—
		AYDHTRL436A	36.0	2	64	70	68	70
		AYDHTRL454A	54.0	2	91	100	95	100
		AYDHTRK472A	72.0	2	118	125	123	125
25	TCD301C4	AYDHTRL427A3	27.0	2	57	70	—	—
		AYDHTRL436A	36.0	2	68	70	—	—
		AYDHTRL454A	54.0	2	95	100	—	—
		AYDHTRK472A	72.0	2	123	125	—	—
			575 Volts Three Phase					
12½	TCD151CW	AYDHTRKW18A	18.0	1	27	30	30	30
		AYDHTRMW36A	36.0	2	49	50	51	60
		AYDHTRKW54A	54.0	2	70	70	73	80
15	TCD181CW	AYDHTRKW18A	18.0	1	30	40	32	40
		AYDHTRMW36A	36.0	2	49	50	51	60
		AYDHTRKW54A	54.0	2	70	70	73	80
	TCD181CW	*AYDHTRKW18A	18.0	1	28	35	30	40
17½	TCD211CW	AYDHTRMW36A	36.0	2	51	60	55	60
		AYDHTRLW54A	54.0	2	73	80	77	80
		AYDHTRKW72A	72.0	2	95	100	98	100
20	TCD241CW	AYDHTRMW36A	36.0	2	51	60	55	60
		AYDHTRLW54A	54.0	2	73	80	77	80
		AYDHTRKW72A	72.0	2	95	100	98	100

Table 70. (continued) Unit Wiring with Electric Heat (Single Point Connection) — TXV/Face-Split Evaporator Coil or Dehumidification (Hot Gas Reheat) Refrigeration System (Downflow only)

					Standard Indoor Motor		Oversize Indoor Motor	
Tons	Unit Model Number	Heater Model Number	Heater kW Rating	Control Stages	Control	Max Fuse Size or Max Circuit Breaker	MCA	Max Fuse Size or Max Circuit Breaker
25	TCD301CW	AYDHTRMW36A	36.0	2	55	60	—	—
		AYDHTRLW54A	54.0	2	77	80	—	—
		AYDHTRKW72A	72.0	2	98	100	—	—

(i) For Heater Model Numbers: AYDHTRK427A and AYDHTRL427A do not use oversized motor.
(ii) Values do not include power exhaust accessory. *Applies only to Dehumidification (Hot Gas Reheat) Models.

Table 71. Electrical Characteristics — Compressor Motor and Condenser Motor — 60 Cycle

		Compressor Motors							Condenser Fan Motors				
							Amps(i)					Amps	
Tons	Unit Model Number	No.	Volts	Phase	HP(ii)	RPM	RLA	LRA	No.	Phase	HP	FLA	LRA
12½	T/YC*151C3	2	208-230	3	5.70	3450	20.7	156	2	1	.50	3.2	8.8
	T/YC*151C4	2	460	3	5.70	3450	10.0	75	2	1	.50	1.6	3.8
	T/YC*151CW	2	575	3	5.70	3450	8.2	54	2	1	.50	1.3	3.2
15	T/YC*181C3	2	208-230	3	9.30/4.50	3450	31.5/16.9	253/124	2	1	.50	3.2	8.8
	T/YC*181C4	2	460	3	9.30/4.50	3450	15.1/8.2	113/59.6	2	1	.50	1.6	3.8
	T/YC*181CW	2	575	3	9.30/4.50	3450	12.1/6.6	85/49.4	2	1	.50	1.3	3.2
17½	T/YC*211C3	2	208-230	3	10.0/5.70	3450	33.3/20.7	278/156	2	1	1.00	5.5	18.3
	T/YC*211C4	2	460	3	10.0/5.70	3450	16.3/10.0	124/75	2	1	1.00	2.9	9.3
	T/YC*211CW	2	575	3	10.0/5.70	3450	13.2/8.2	92/54	2	1	1.00	2.0	5.7
20	T/YC*241C3	2	208-230	3	9.30	3450	31.6	253	2	1	1.00	5.5	18.3
	T/YC*241C4	2	460	3	9.30	3450	16.1	113	2	1	1.00	2.9	9.3
	T/YC*241CW	2	575	3	9.30	3450	12.9	85	2	1	1.00	2.0	5.7
25	T/YC*301C3	2	208-230	3	10.00	3450	37.6	278	2	1	1.00	5.5	18.3
	T/YC*301C4	2	460	3	10.00	3450	18.3	124	2	1	1.00	2.9	9.3
	T/YC*301CW	2	575	3	10.00	3450	14.9	92	2	1	1.00	2.0	5.7

(i) For Compressor Motors and Condenser Fan Motors: Amp draw for each motor; multiply value by number of motors to determine total amps.
(ii) HP for each compressor. *Indicates both downflow and horizontal units.

Table 72. Electrical Characteristics — Compressor Motor and Condenser Motor — 60 Cycle — TXV/Face-Split Evaporator Coil Option (Downflow Only)

		Compressor Motors							Condenser Fan Motors				
							Amps(i)					Amps	
Tons	Unit Model Number	No.	Volts	Phase	HP(ii)	RPM	RLA	LRA	No.	Phase	HP	FLA	LRA
12½	T/YCD151C3	2	208-230	3	5.7	3450	18.6	156	2	1	.50	3.2	8.8
	T/YCD151C4	2	460	3	5.7	3450	9.4	75	2	1	.50	1.6	3.8
	T/YCD151CW	2	575	3	5.7	3450	7.4	54	2	1	.50	1.3	3.2
15	T/YCD181C3	2	208-230	3	9.30/4.50	3450	32.1/16.4	253/124	2	1	.50	3.2	8.8
	T/YCD181C4	2	460	3	9.30/4.50	3450	15.6/8.7	113/59.6	2	1	.50	1.6	3.8
	T/YCD181CW	2	575	3	9.30/4.50	3450	12.3/7.4	85/49.4	2	1	.50	1.3	3.2
17½	T/YCD211C3	2	208-230	3	10.00/5.7	3450	34.8/19.5	278/156	2	1	1.00	5.5	18.3
	T/YCD211C4	2	460	3	10.00/5.7	3450	17.0/10.3	124/75	2	1	1.00	2.9	9.3
	T/YCD211CW	2	575	3	10.00/5.7	3450	13.8/8.1	92/54	2	1	1.00	2.0	5.7
20	T/YCD241C3	2	208-230	3	9.0/9.3	3500/3450	30.4/32.6	225/253	2	1	1.00	5.5	18.3
	T/YCD241C4	2	460	3	9.0/9.3	3500/3450	16.1/16.8	114/113	2	1	1.00	2.9	9.3
	T/YCD241CW	2	575	3	9.0/9.3	3500/3450	12.5/13.4	80/85	2	1	1.00	2.0	5.7
25	T/YCD301C3	2	208-230	3	10.00	3450	36.2	278	2	1	1.00	5.5	18.3
	T/YCD301C4	2	460	3	10.00	3450	17.7	124	2	1	1.00	2.9	9.3
	T/YCD301CW	2	575	3	10.00	3450	14.3	92	2	1	1.00	2.0	5.7

(i) For Compressor Motors and Condenser Fan Motors: Amp draw for each motor; multiply value by number of motors to determine total amps.
(ii) HP for each compressor.

Table 73. Electrical Characteristics — Compressor Motor and Condenser Motor — 60 Cycle — Dehumidification (Hot Gas Reheat) Option (Downflow Only)

		Compressor Motors							Condenser Fan Motors				
							Amps[i]					Amps	
Tons	Unit Model Number	No.	Volts	Phase	HP[ii]	RPM	RLA	LRA	No.	Phase	HP	FLA	LRA
12½	T/YCD151C3	2	208-230	3	5.7/5.7	3450	18.6	156	2	1	.50	3.2	8.8
	T/YCD151C4	2	460	3	5.7/5.7	3450	9.7	75	2	1	.50	1.6	3.8
	T/YCD151CW	2	575	3	5.7/5.7	3450	7.6	54	2	1	.50	1.3	3.2
15	T/YCD181C3	2	208-230	3	8.3/5.7	3450	27.4/19.0	208/156	2	1	.50	3.2	8.8
	T/YCD181C4	2	460	3	8.3/5.7	3450	13.8/10.1	100/75	2	1	.50	1.6	3.8
	T/YCD181CW	2	575	3	8.3/5.7	3450	10.7/7.9	68/54	2	1	.50	1.3	3.2
20	T/YCD241C3	2	208-230	3	9.0/9.3	3500/3450	30.1/31.7	225/253	2	1	1.00	5.5	18.3
	T/YCD241C4	2	460	3	9.0/9.3	3500/3450	15.6/16.2	114/113	2	1	1.00	2.9	9.3
	T/YCD241CW	2	575	3	9.0/9.3	3500/3450	12.1/13.0	80/85	2	1	1.00	2.0	5.7

(i) For Compressor Motors and Condenser Fan Motors: Amp draw for each motor; multiply value by number of motors to determine total amps.
(ii) HP for each compressor.

Table 74. Electrical Characteristics — Evaporator Fan Motor — 60 Cycle — Standard and Oversized

		Standard Evaporator Fan Motor						Oversized Evaporator Fan Motor					
						Amps[i]						Amps	
Tons	Unit Model Number	No.	Volts	Phase	HP[ii]	FLA	LRA	No.	Volts	Phase	HP	FLA	LRA
12½	T/YC*151C3	1	208-230	3	3.00	10.6	81.0	1	208-230	3	5.00	16.7	109.8
	T/YC*151C4	1	460	3	3.00	4.8	40.5	1	460	3	5.00	7.6	54.9
	T/YC*151CW	1	575	3	3.00	3.9	31.0	1	575	3	5.00	6.1	41.6
15	T/YC*181C3	1	208-230	3	3.00	10.6	81.0	1	208-230	3	5.00	16.7	109.8
	T/YC*181C4	1	460	3	3.00	4.8	40.5	1	460	3	5.00	7.6	54.9
	T/YC*181CW	1	575	3	3.00	3.9	31.0	1	575	3	5.00	6.1	41.6
17½	T/YC*211C3	1	208-230	3	5.00	16.7	109.8	1	208-230	3	7.50	24.2	120.4
	T/YC*211C4	1	460	3	5.00	7.6	54.9	1	460	3	7.50	11.0	74.0
	T/YC*211CW	1	575	3	5.00	6.1	41.6	1	575	3	7.50	9.0	60.0
20	T/YC*241C3	1	208-230	3	5.00	16.7	109.8	1	208-230	3	7.50	24.2	120.4
	T/YC*241C4	1	460	3	5.00	7.6	54.9	1	460	3	7.50	11.0	74.0
	T/YC*241CW	1	575	3	5.00	6.1	41.6	1	575	3	7.50	9.0	60.0
25	T/YC*301C3	1	208-230	3	7.50	24.2	120.4	—	—	—	—	—	—
	T/YC*301C4	1	460	3	7.50	11.0	74.0	—	—	—	—	—	—
	T/YC*301CW	1	575	3	7.50	9.0	60.0	—	—	—	—	—	—

(i) For Compressor Motors and Condenser Fan Motors: Amp draw for each motor; multiply value by number of motors to determine total amps.
(ii) HP for each compressor.
* Indicates downflow and horizontal units.

Table 75. Electrical Characteristics — Combustion Blower Motor (Gas/Electric)

							Amps	
Unit Model Number	Heat	Heating Stages	HP	RPM[i]	Volts	Phase	FLA	LRA
YC*151	Low	2	1/20	3500/2800	208-230	1	0.5	0.78
YC*181, 211, 241-301	Low	2	1/10	3500/2800	208-230	1	0.8	2.00

(i) High/Low Speed.
* Indicates both downflow and horizontal units.

Table 76. Electrical Characteristics — Power Exhaust (Cooling and Gas/Electric)

					Amps	
Tons	Volts	Phase	HP	RPM	FLA	LRA
12½	208-230	1	3/4	1040	6.6	13.5
15,17½,20,25	460	1	3/4	1040	3.2	8.4
15,17½,20,25	575	1	3/4	1040	2.1	5.2

Jobsite Connections

Table 77. Typical Number of Wires

Zone Sensors		
A	Manual Changeover	4
	Manual/Auto Changeover	5
	Manual/Auto Changeover with Status Indication LED's	10
	Programmable Night Setback with Status Indication LED's	7
Thermostats		
B	3 Power Wires + 1 Ground Wire (three phase)	
	2 Power Wires + 1 Ground Wire (single phase)	

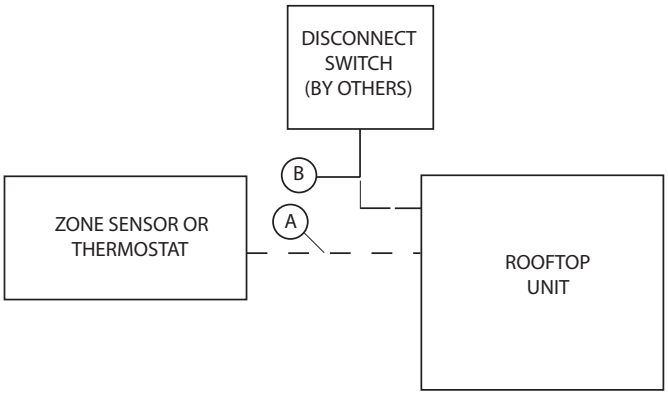

For specific wiring information, see the installation instructions.

All wiring except power wire is low voltage.

All customer supplied wiring to be copper and must conform to applicable electrical codes (such as NEC or CEC) and local electric codes. Wiring shown dotted is to be furnished and installed by the customer.

Typical Wiring

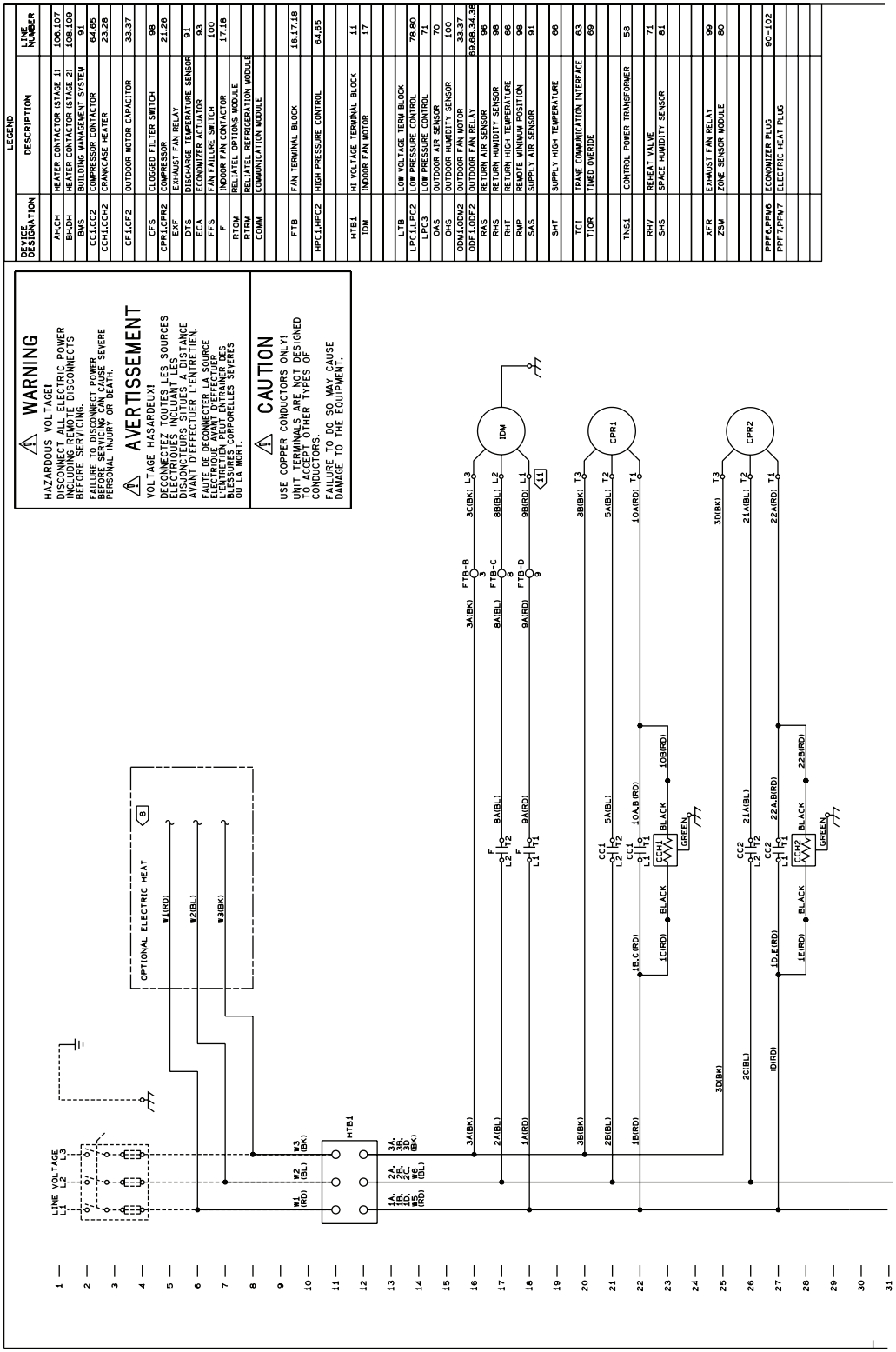

Figure 3. 12.5-25 Tons Cooling with Optional Electric Heat.

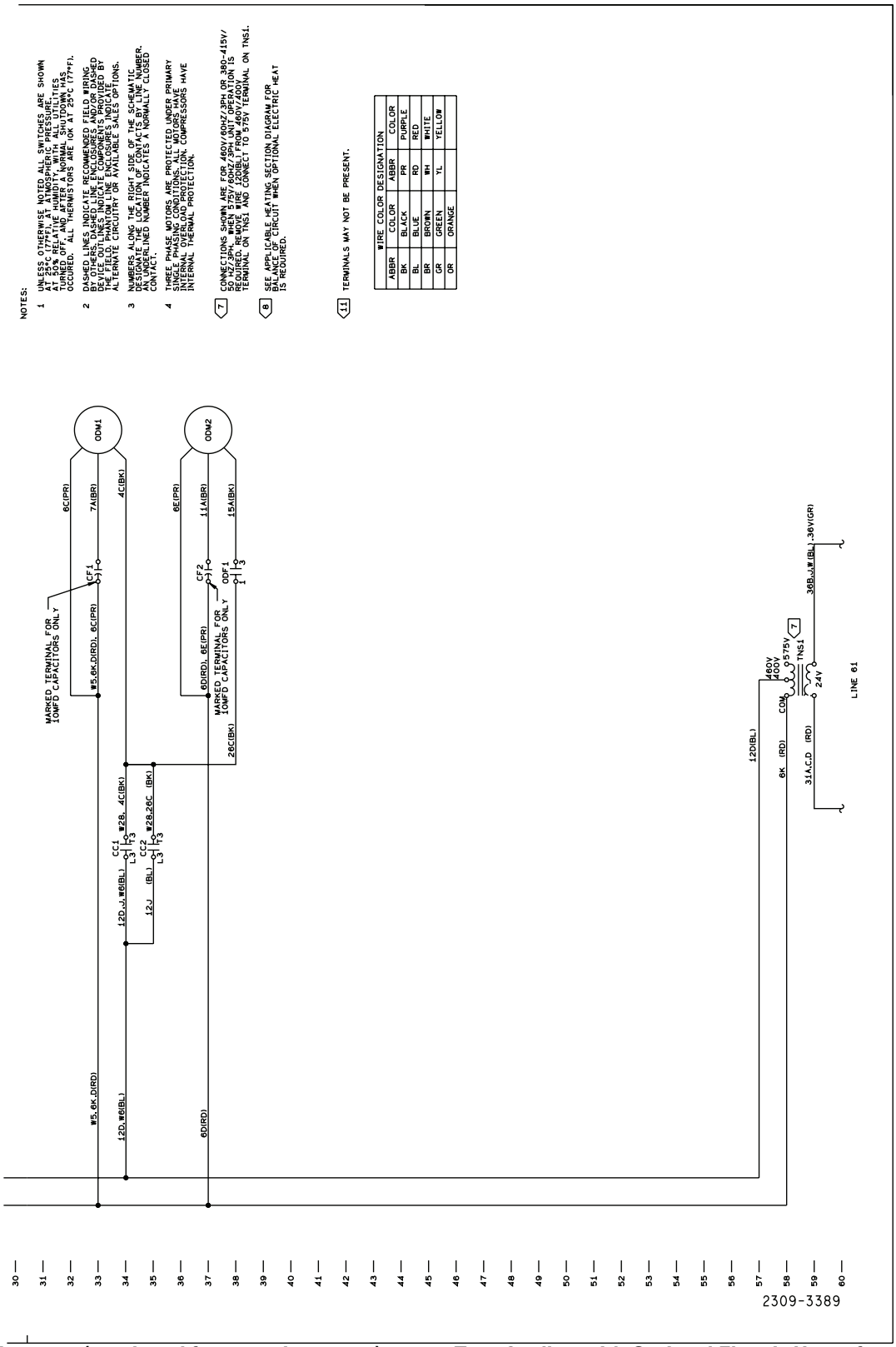

Figure 3. (continued from previous page)12.5-25 Tons Cooling with Optional Electric Heat - for specific wiring, see service facts.

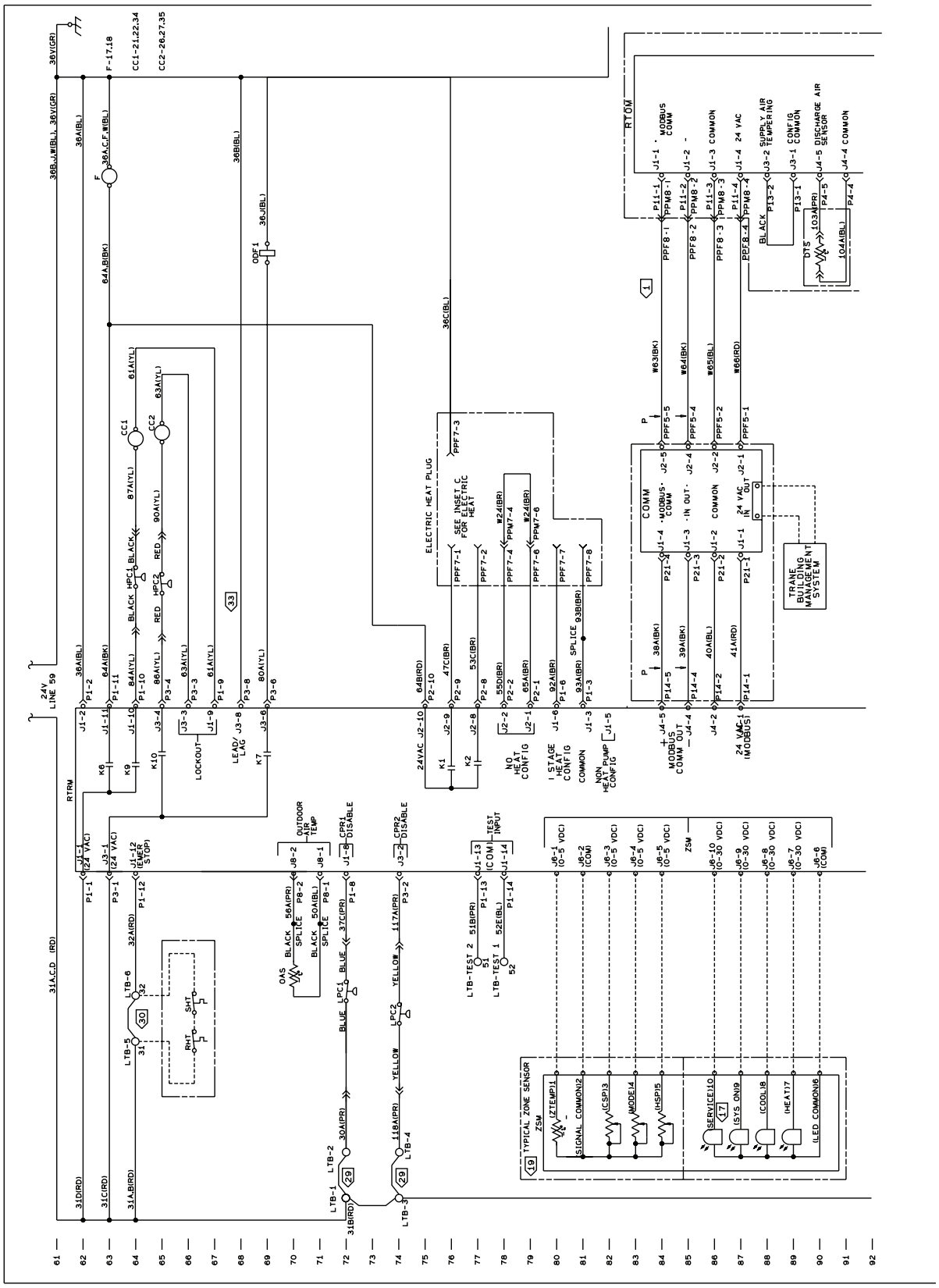

Figure 4. 12.5-25 Tons Cooling with Optional Electric Heat - for specific wiring, see service facts.

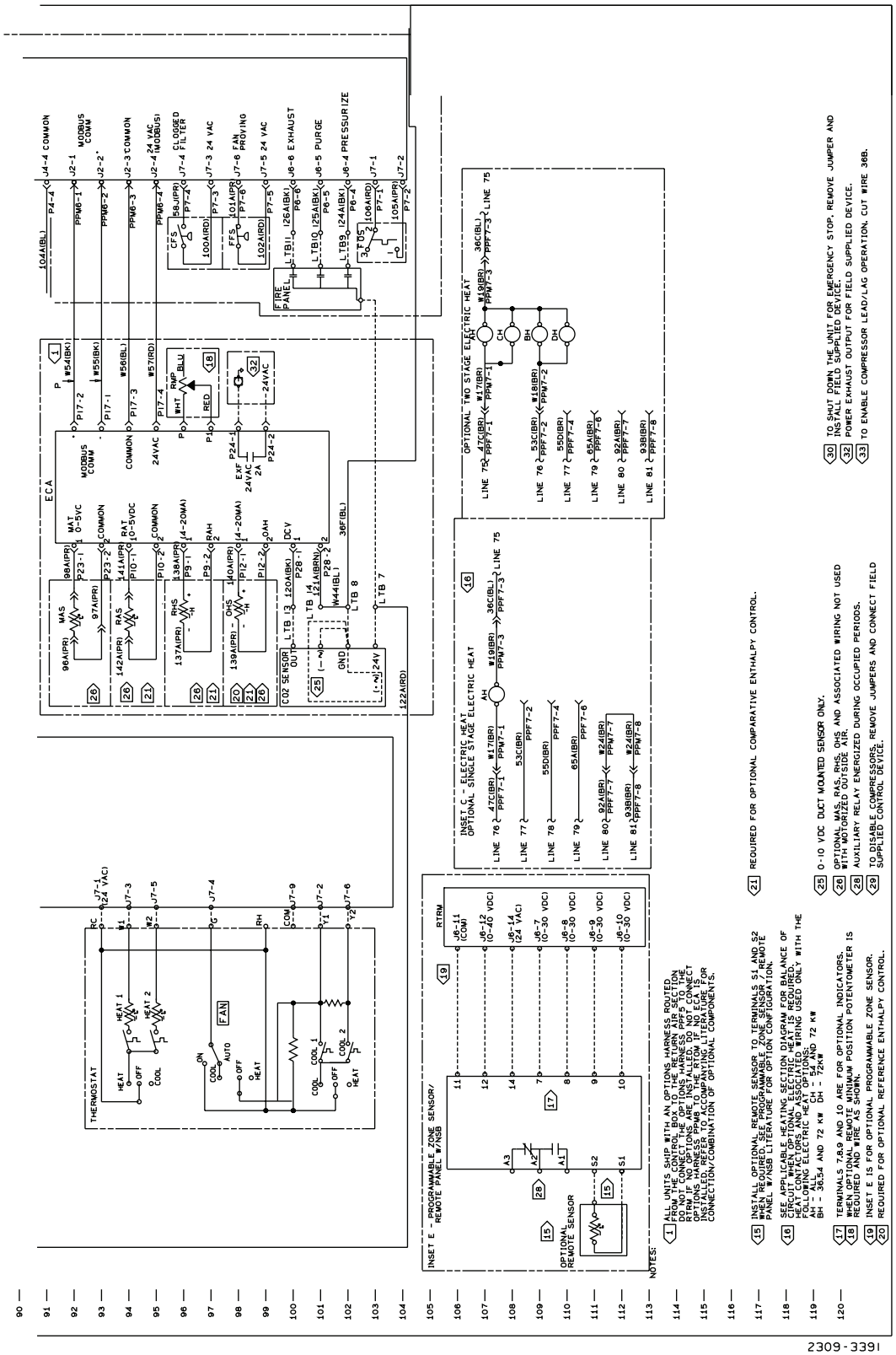

Figure 4. (continued from previous page)12.5-25 Tons Cooling with Optional Electric Heat - for specific wiring, see service facts.

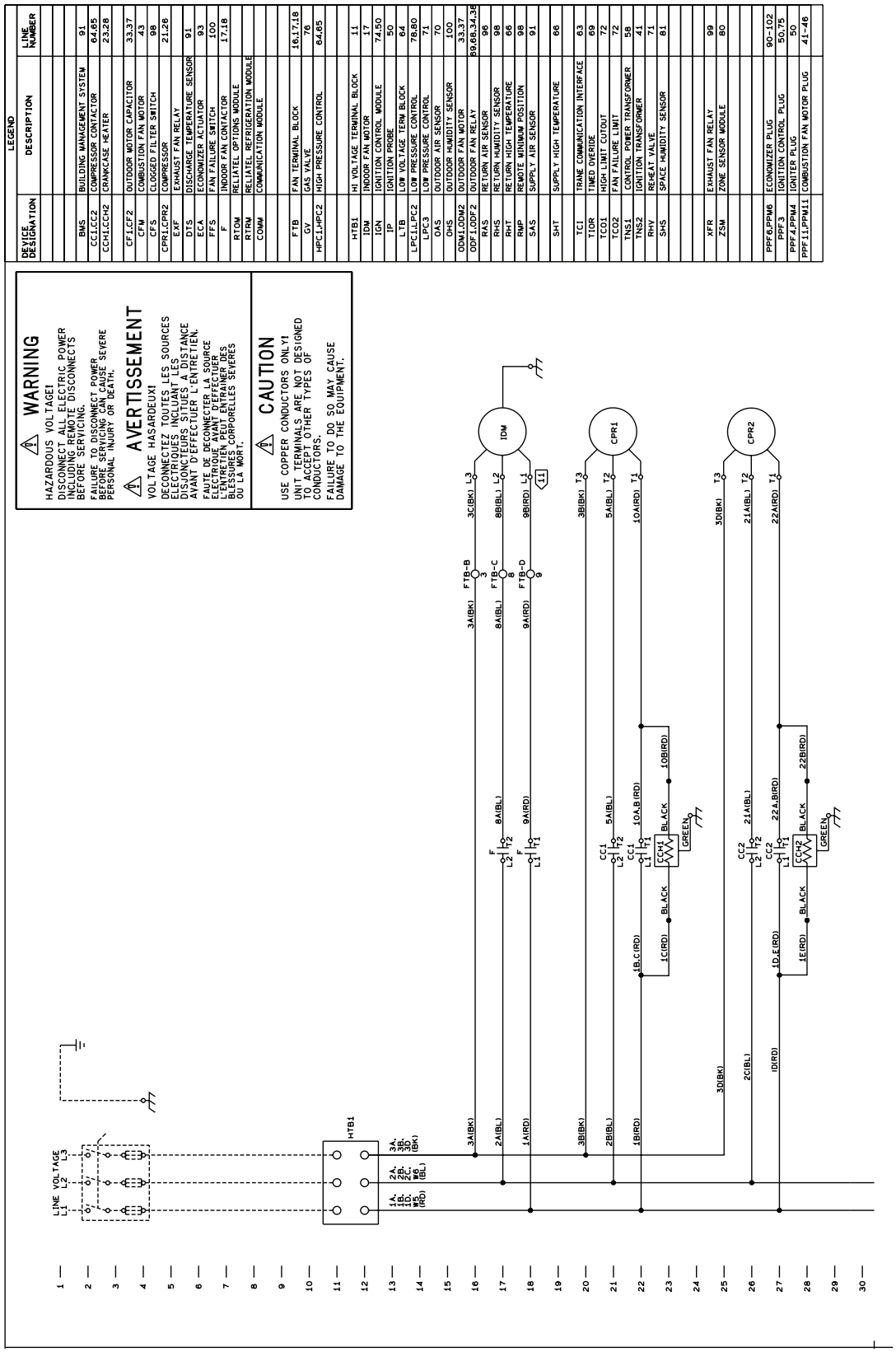

Figure 5. 12.5-25 Tons Gas/Electric- for specific wiring, see service facts.

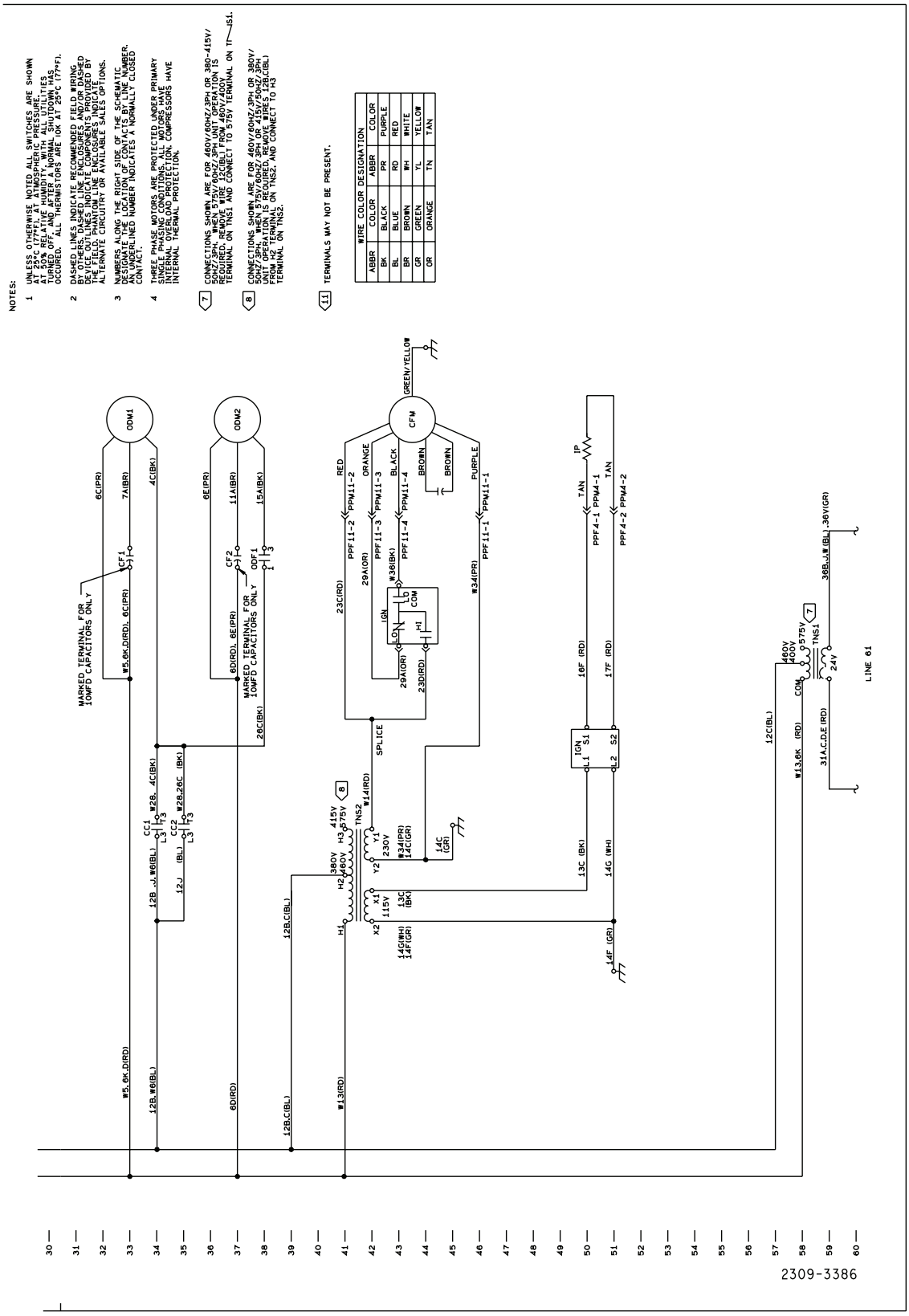

Figure 5. (continued from previous page)12.5-25 Tons Gas/Electric - for specific wiring, see service facts.

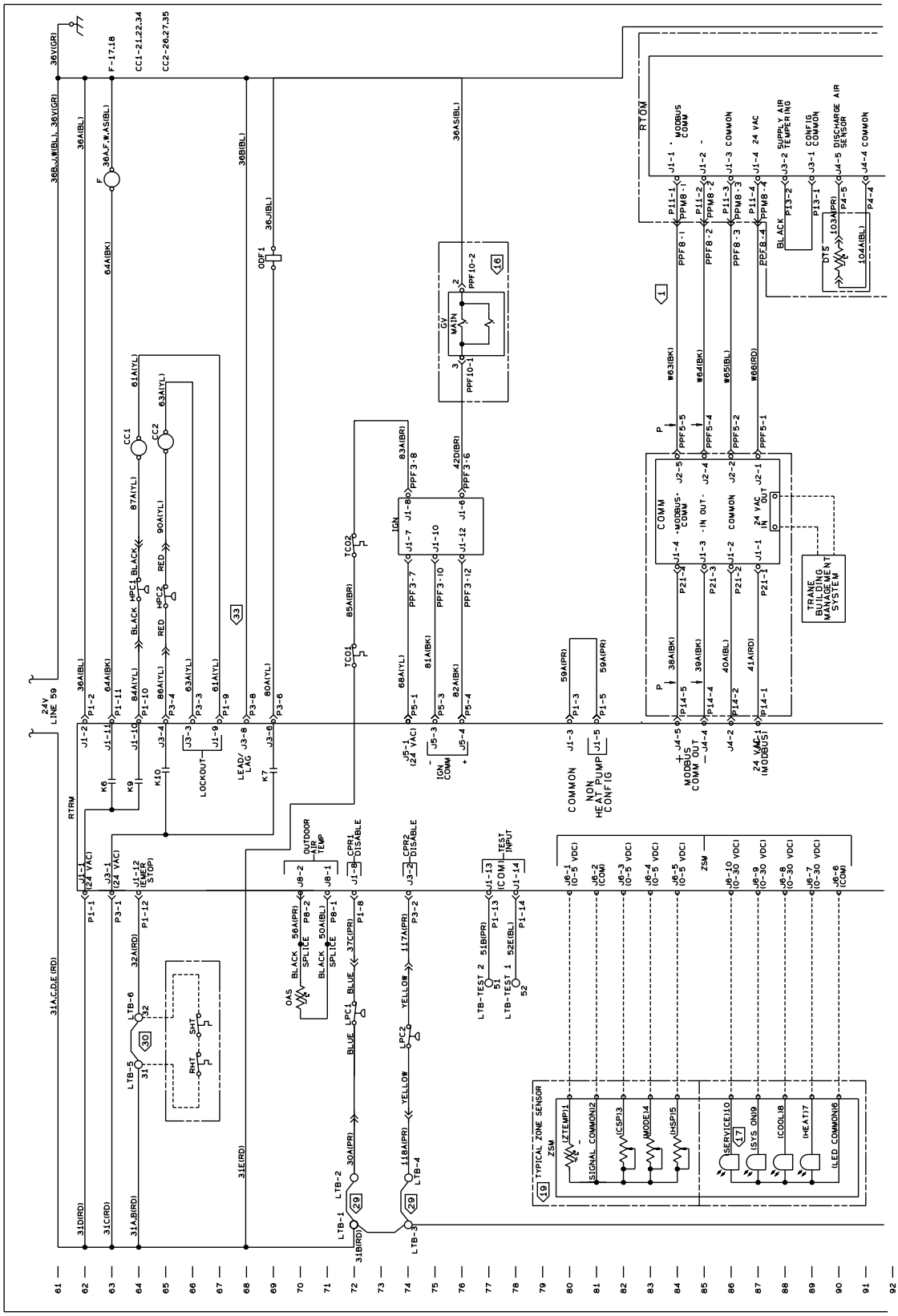

Figure 6. 12.5-25 Tons Gas/Electric- for specific wiring, see service facts.

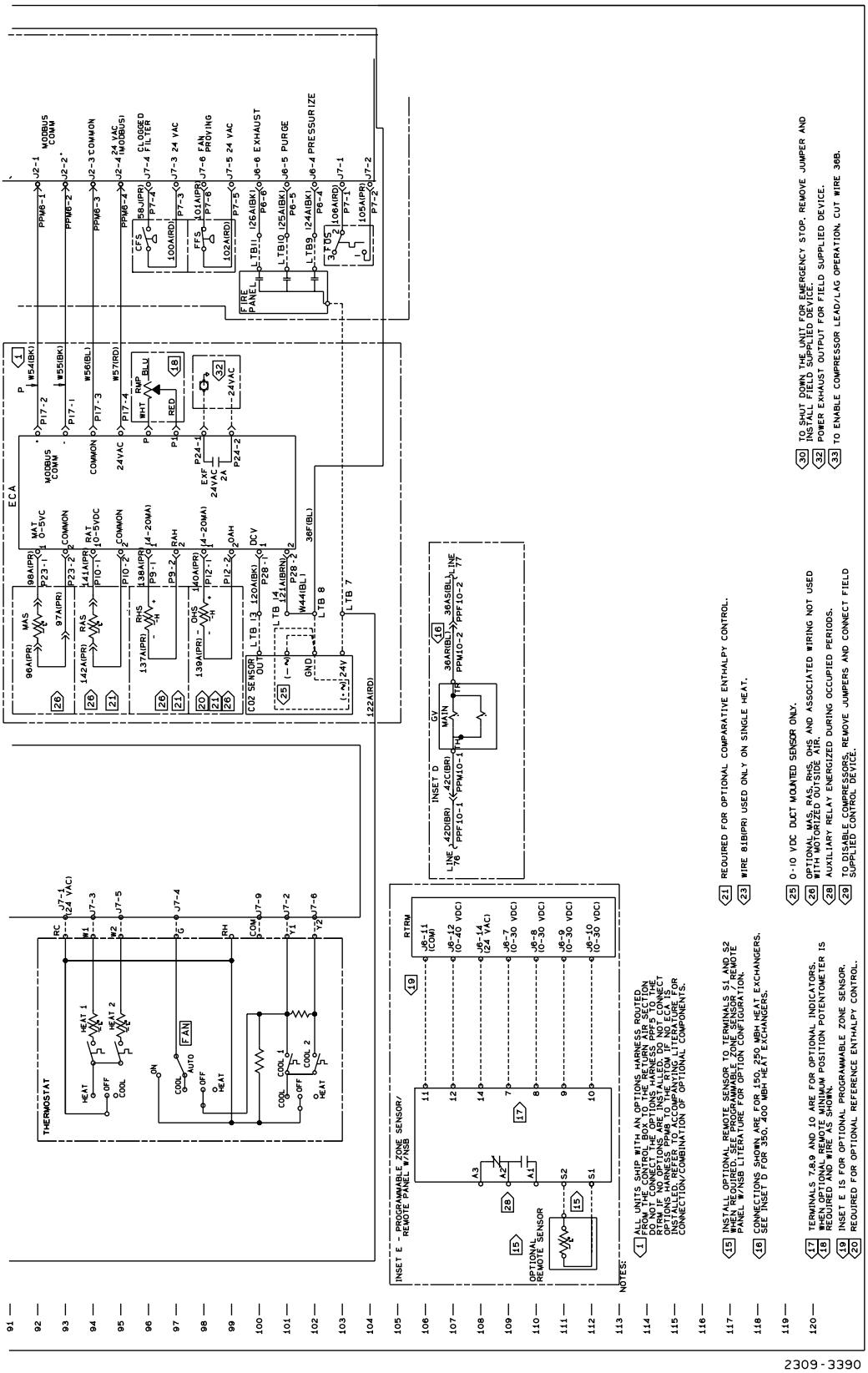

Figure 6. (continued from previous page)12.5-25 Tons Gas/Electric- for specific wiring, see service facts.

Dimensional Data

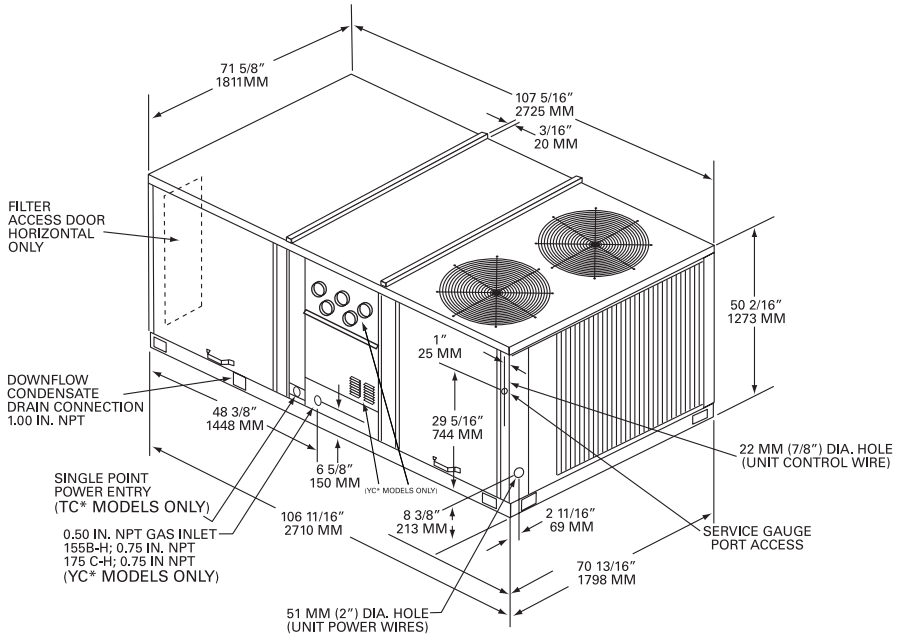

Figure 7. Cooling with Optional Electric Heat and Gas/Electric Models - 12½-17½ Tons Standard Efficiency; 12½ Tons High Efficiency

* All dimensions are in inches/millimeters.

**1/2 NPT Gas Connection = (Y_C Models only); 2" Electrical Connection: Single Point Power When Heat Installed (T_C Models only.)

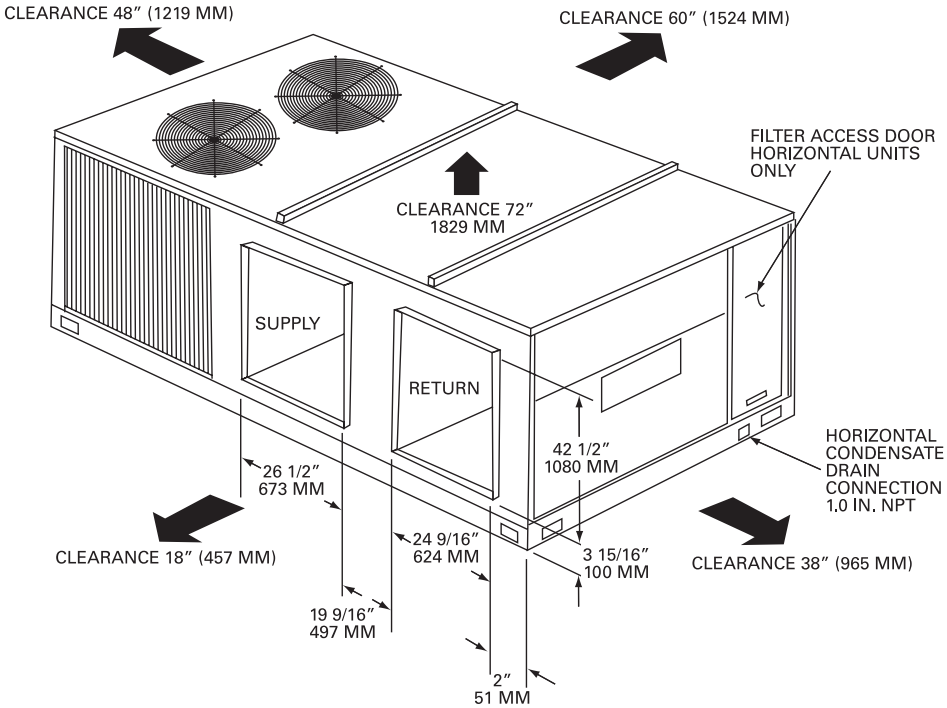

Figure 8. Cooling with Optional Electric Heat and Gas/Electric Models - 12½-17½ Tons Standard Efficiency; 12½ Tons High Efficiency - Downflow Unit Clearance

* All dimensions are in inches/millimeters.

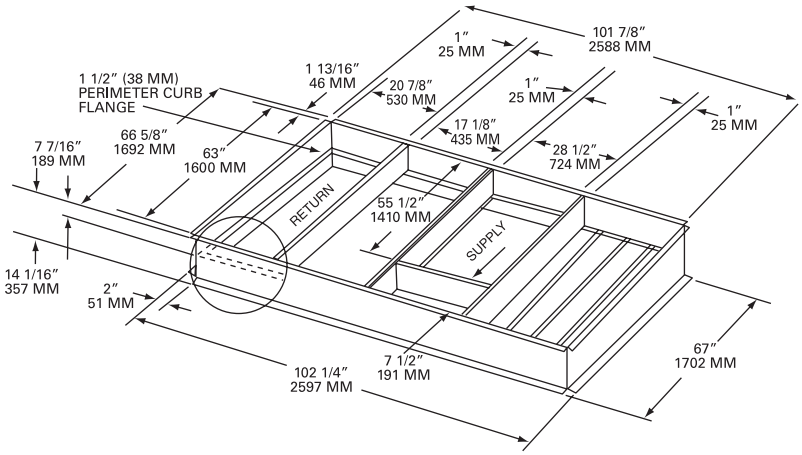

Figure 9. Cooling with Optional Electric Heat and Gas/Electric Models 12½-17½ Tons Standard Efficiency - 12½ Tons High Efficiency - Roof Curb

* All dimensions are in inches/millimeters.

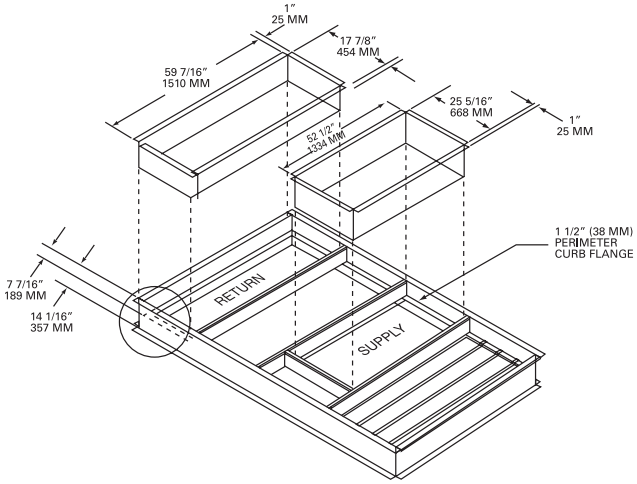

Figure 10. Cooling with Optional Electric Heat and Gas/Electric Models 12½-17½ Tons Standard Efficiency; 12½ High Efficiency - Downflow Duct Connections - Field Fabricated

* Duct flanges mount 7-7/16" down inside the curb on the 1-1½ curb flanges.
Roofcurb is intended for downflow use only.
* All dimensions are in inches/millimeters.

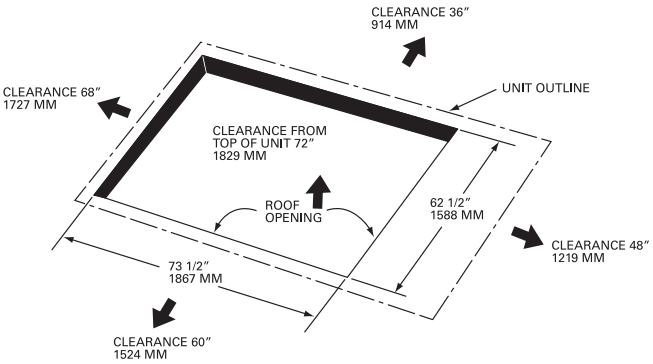

Figure 11. Cooling with Optional Electric Heat and Gas/Electric Models - 12½-17½ Tons Standard Efficiency; 12½ Tons High Efficiency - Horizontal Unit Supply/Return and Unit Clearance

* All dimensions are in inches/millimeters.

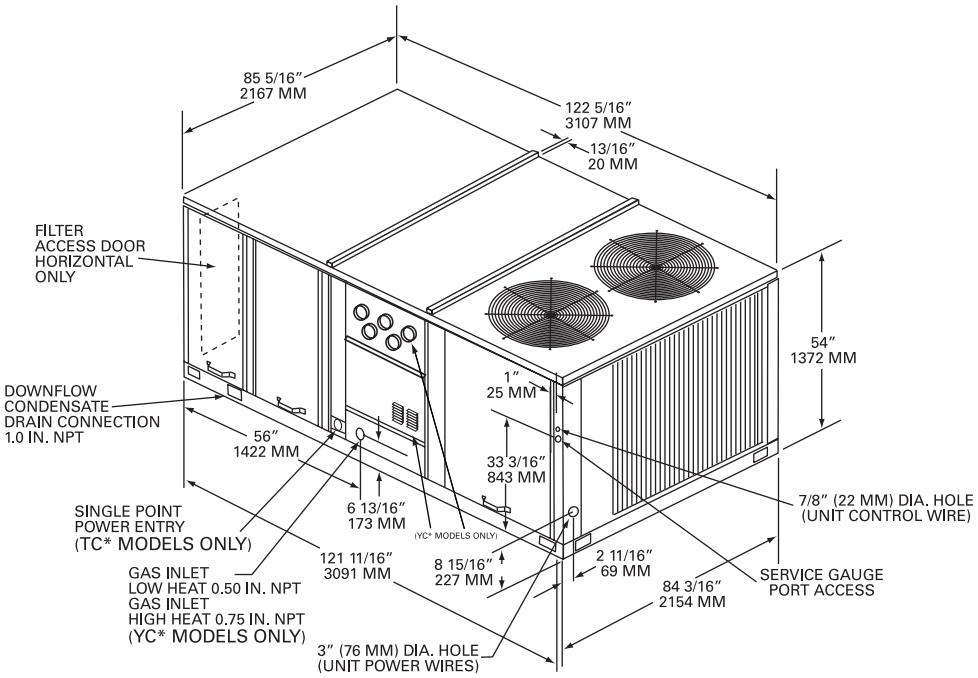

Figure 12. Cooling with Optional Electric Heat and Gas/Electric Models - 20-25 Tons Standard Efficiency; 15-25 Tons High Efficiency

* All dimensions are in inches/millimeters.

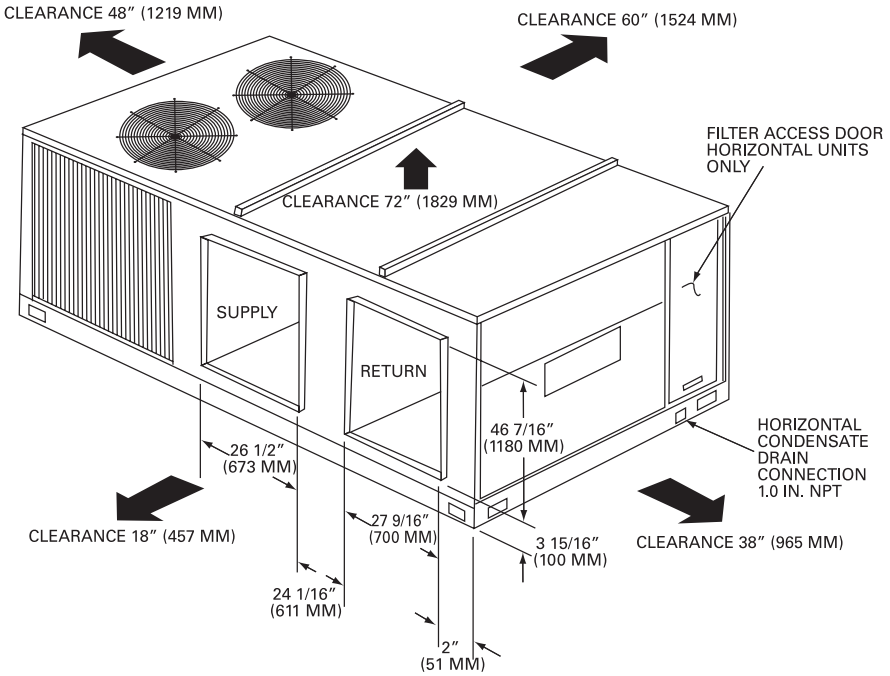

Figure 13. Cooling with Optional Electric Heat and Gas/Electric Models - 20-25 Tons Standard Efficiency; 15-25 Tons High Efficiency - Horizontal Unit Supply/Return and Unit Clearance

* All dimensions are in inches/millimeters.

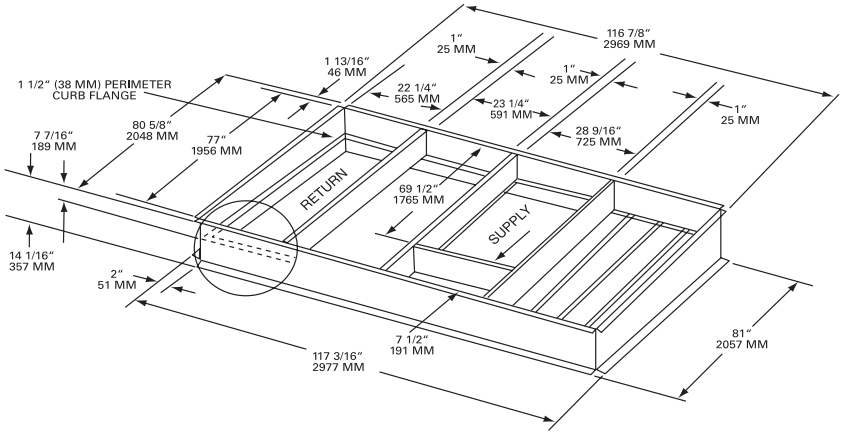

Figure 14. Cooling with Optional Electric Heat and Gas/Electric Models - 20-25 Tons Standard Efficiency; 15-25 Tons High Efficiency - Roof Curb
* All dimensions are in inches/millimeters.

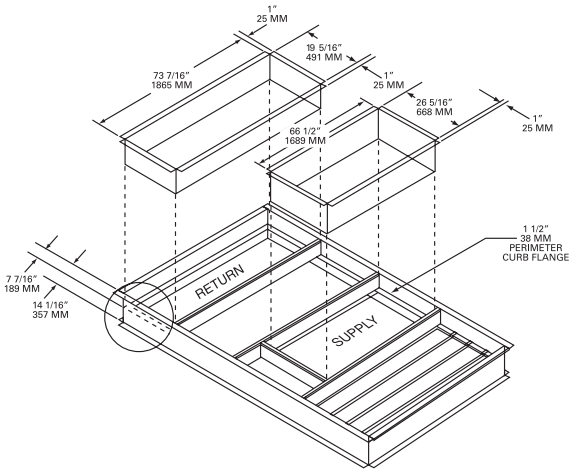

Figure 15. Cooling with Optional Electric Heat and Gas/Electric Models - 20-25 Tons Standard Efficiency; 15-25 Tons High Efficiency - Downflow Duct Connections - Field Fabricated
* Duct flanges mount 7-7/16" down inside the curb on the 1-1½ curb flanges.
Roofcurb is intended for downflow use only.
* All dimensions are in inches/millimeters.

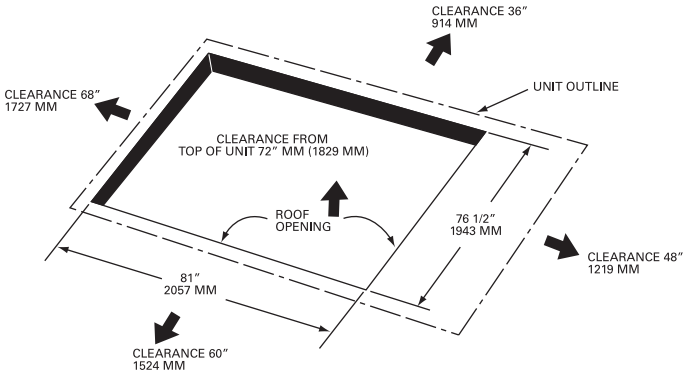

Figure 16. Cooling with Optional Electric Heat and Gas/Electric Models - 20-25 Tons Standard Efficiency; 15-25 Tons High Efficiency - Downflow Unit Clearance
* All dimensions are in inches/millimeters.

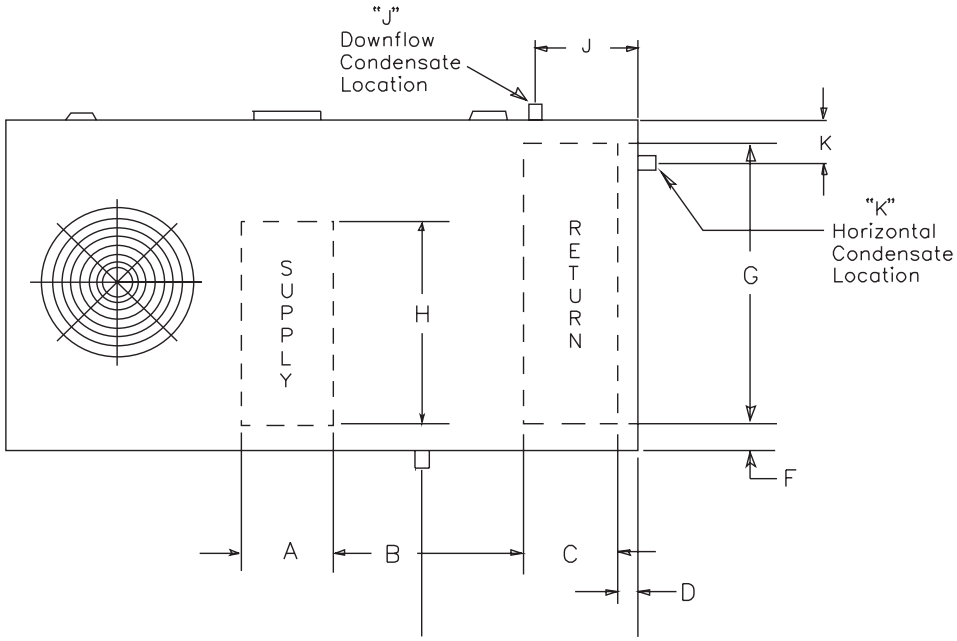

Table 78. Standard Efficiency Units (Cooling and Gas/Electric)

Tons	Downflow Only							Condensate Drain Size	Condensate Drain Location	
									Downflow	Horizontal
	A	B	C	D	F	G	H		J	K
12½, 15, 17½	26 7/16	22 1/2	18 11/16	4 1/4	4 1/4	62 7/16	54 11/16	1 NPT	25 5/8	6
20, 25	26 7/16	28 3/4	19 15/16	4 1/4	4 1/4	76 5/16	68 11/16	1 NPT	26 3/4	5 3/8

Table 79. High Efficiency Units (Cooling and Gas/Electric)

Tons	Downflow Only							Condensate Drain Size	Condensate Drain Location	
									Downflow	Horizontal
	A	B	C	D	F	G	H		J	K
12½	26 7/16	22 1/2	18 11/16	4 1/4	4 1/4	62 7/16	54 11/16	1 NPT	25 5/8	6
15-25	26 7/16	28 3/4	19 15/16	4 1/4	4 1/4	76 5/16	68 11/16	1 NPT	26 3/4	5 3/8

Table 80.

Unit Model #	A	B	C
TCD150, 151, 180, 210	42 3/8	48 3/8	31
TCD181, 211-301	29 1/2	56	38 1/2

All dimensions are in inches.

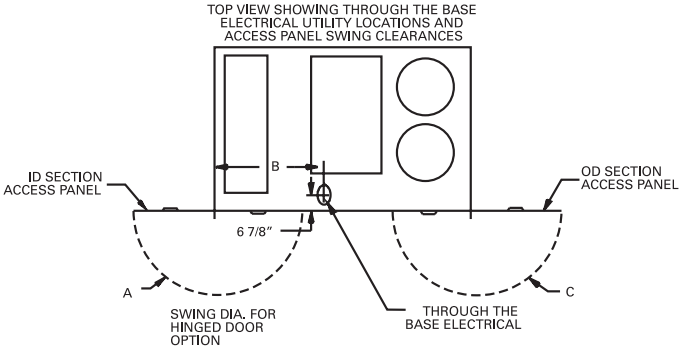

Figure 17. Cooling Unit - Swing Diameter & Through the Base Electrical

Table 81.

Unit Model #	A	B	C
YCD150, 151, 180, 210	42 3/8	66 3/8	48 3/8
YCD181, 211-301	29 1/2	77 7/8	58

All dimensions are in inches.

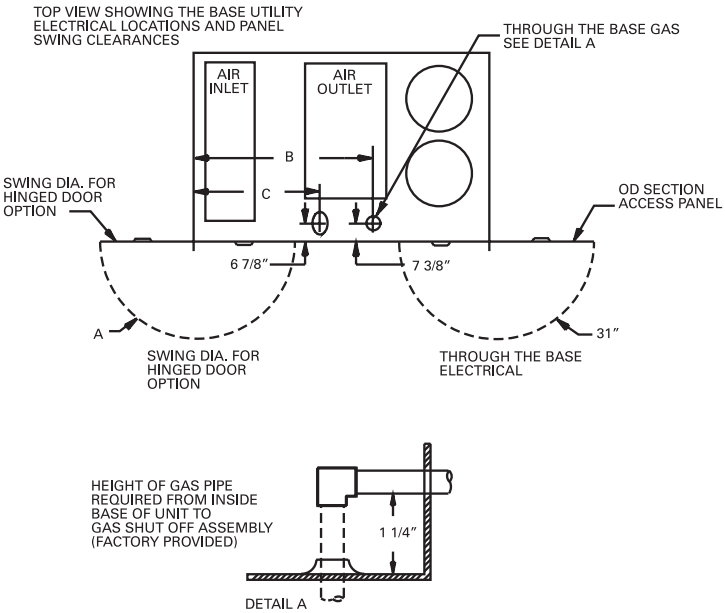

Figure 18. Gas/Electric Unit - Swing Diameter & Through the Base Electrical; Height of Gas Pipe (Second Drawing)

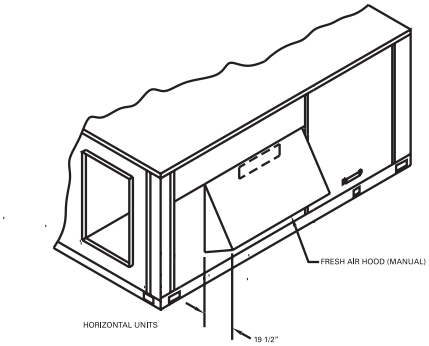

Figure 19. Fresh Air Hood (Horizontal Units)

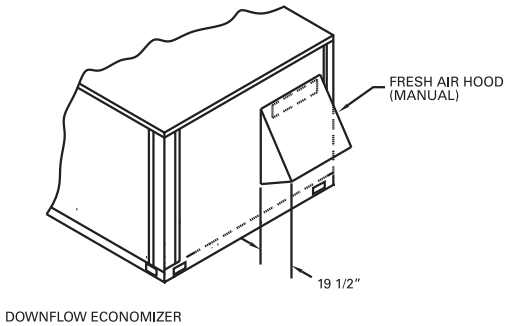

Figure 20. Fresh Air Hood (Downflow Units)

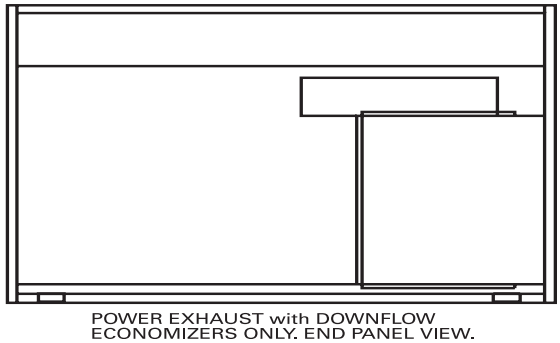

Figure 21. Power Exhaust - Downflow Economizers

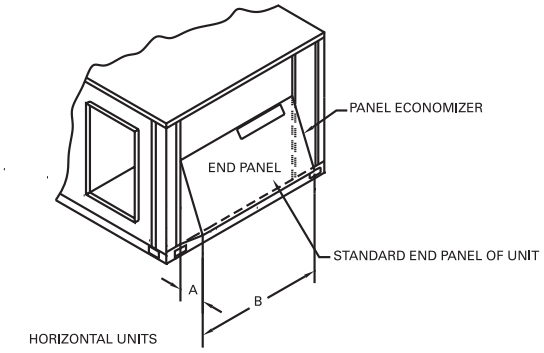

Figure 22. Economizer - Horizontal Units

Note: When applying economizer to horizontal units, connected ductwork must be run full size to allow proper operation of economizer damper.

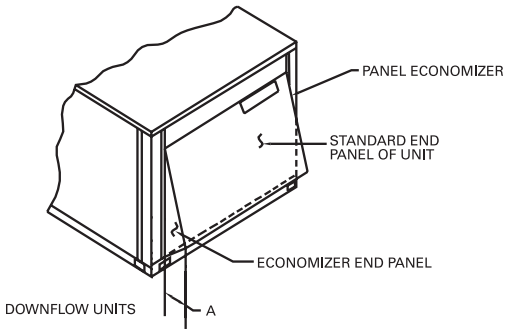

Figure 23. Economizer - Downflow Units

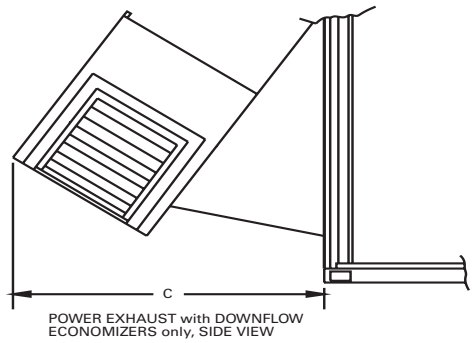

Figure 24. Power Exhaust - Downflow Economizers - Side View

Table 82. Power Exhaust Dimensions

Unit Model #	A	B[i]	C[ii]
T/YC*150-151-180,210	17½	53¾	36
T/YC*181, 211-301	19½	64¾	39

(i) Horizontal dimension only. Downflow economizer is width of end panel.
(ii) Power exhaust is applied on downflow economizer only.

Weights

Table 83. Maximum Unit & Corner Weights (Lbs) and Center of Gravity Dimensions (in.) Cooling with Optional Electric Heat Units only

Unit		Weights (Lbs)(i),(ii)		Corner Weights(iii)				Center of Gravity (in.)	
Tons	Model No.	Shipping	Net	A	B	C	D	Length	Width
12½	TC*150D/TC*151C	1687/1820	1319/1452	446/485	339/360	230/259	303/348	46/45	29/30
	TCD151C (Reheat Units)	1864	1496	496	371	270	359	45	30
15	TC*180B/TC*181C	1866/2361	1498/1902	547/643	358/477	234/333	359/447	42/52	28/35
	TCD181C (Reheat Units)	2425	1966	659	493	349	463	52	35
17½	TC*210C/TC*211C	2022/2380	1654/1921	565/643	425/495	285/341	378/442	46/53	29/35
20	TC*240B/TC*241C	2372/2490	1913/2031	679/697	482/528	312/348	440/458	51/53	34/34
	TCD241C (Reheat Units)	2510	2051	702	533	353	463	53	34
25	TC*300B/ TC*301C	2365/2475	1906/2016	661/695	507/524	320/343	418/454	53/53	33/34

(i) Weights are approximate. Horizontal and downflow unit and corner weights may vary slightly.
(ii) Weights do not include additional factory or field installed options/accessories. For option/accessory additional weights, reference Table 85, Table 86, Table 87 to be added to unit weights.
(iii) Corner weights are given for information only. 12½-25 ton models must be supported continuously by a curb or equivalent frame support.
* Indicates both downflow and horizontal units.

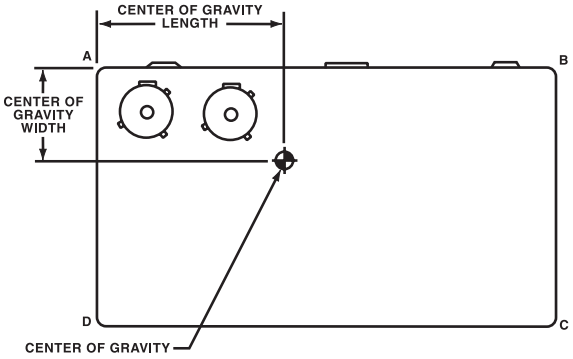

Table 84. Maximum Unit & Corner Weights (Lbs) and Center of Gravity Dimensions (in.) Gas/Electric Heat Units only

Unit		Weights (Lbs)(i),(ii)		Corner Weights(iii)				Center of Gravity (in.)	
Tons	Model No.	Shipping	Net	A	B	C	D	Length	Width
12½	YC*150D/YC*151C	1826/1915	1458/1547	495/523	373/383	254/271	336/370	46/45	29/30
	YCD151C (Reheat Units)	1959	1591	534	394	282	381	45	30
15	YC*180B/YC*181C	2033/2464	1665/2005	600/686	395/504	266/345	404/470	43/52	29/35
	YCD181C (Reheat Units)	2528	2069	697	515	356	481	52	35
17½	YC*210C/YC*211C	2189/2547	1821/2088	618/701	463/538	317/369	424/480	46/53	29/35
20	YC*240B/YC*241C	2547/2645	2088/2186	738/751	526/568	343/373	481/494	51/53	34/34
	YCD241C (Reheat Units)	2665	2206	756	573	378	499	53	34
25	YC*300B/YC*301C	2541/2650	2082/2191	721/755	552/569	351/373	458/495	53/53	33/34

(i) Weights are approximate. Horizontal and downflow unit and corner weights may vary slightly.
(ii) Weights do not include additional factory or field installed options/accessories. For option/accessory additional weights, reference Table 85, Table 86, Table 87 to be added to unit weights.
(iii) Corner weights are given for information only. 12½-25 ton models must be supported continuously by a curb or equivalent frame support.
* Indicates both downflow and horizontal units.

Table 85. Accessory Net Weights (Lbs)[i],[ii]

Unit Model No.	Economizer Net	Outside Air Damper Manual	Outside Air Damper Motorized	Power Exhaust[iii]	Roof Curb[iv]	Oversized Motor Adder	High Static Drive[v]	Low Static Drive[vi]	LPG Conversion Kit
T/YCD150D,180B T/YCD151C, TCD210C	65	32	60	95	205	5	2	2	5
T/YCD240B T/YCD181,211,241C	80	32	75	95	235	5	2	—	5
T/YCD300B,301C	80	32	75	95	235	N/A	N/A	2	5
T/YCH150D, 180B, 210C T/YCH151C	50	32	60	—	—	5	2	2	5
T/YCH240B T/YCH181,211,241C	65	32	75	—	—	5	2	—	5
T/YCH300B,301C	65	32	75	—	—	N/A	N/A	2	5

(i) Net weight should be added to unit weight when ordering factory installed accessories.
(ii) TC*150-300 factory installed options for economizers, multiply net capacity x .99, EER x .97. For oversized motors, multiply net capacity x .98, EER x .93. This is provided in compliance with ARI certification program.
(iii) Downflow only.
(iv) Downflow only.
(v) Not available on all models (See Fan Performance tables for specific models).
(vi) Not available on all models (See Fan Performance tables for specific models).

Table 86. (continued) Accessory Net Weights (Lbs)

Unit Model No.	All Zone Sensors	Electric Heaters 6-23 kW 240/480V[i],[ii]	Electric Heaters 27-36 kW 240/480V[iii],[iv]	Electric Heaters 54 kW 240/480V[v],[vi]	Electric Heaters 72 kW 240/480V[vii],[viii]
T/YCD150D, 180B, 210C T/YCD151,181C	1	28/21[ix]	31/27	38/32	—
T/YCD240B T/YCD211,241C	1	—	33/27	40/32	43/34
T/YCD300B,301C	1	—	33/27	40/32	43/34
T/YCH150D, 180B, 210C T/YCH151,181C	1	28/21[x]	31/27	38/32	—
T/YCH240B T/YCH211, 241C	1	—	33/27	40/32	43/34
T/YCH300B, 301C	1	—	33/27	40/32	43/34

(i) For 600V heaters net weights are same as 480V heaters.
(ii) To estimate shipping weight add 5 lbs to net weight.
(iii) For 600V heaters net weights are same as 480V heaters.
(iv) To estimate shipping weight add 5 lbs to net weight.
(v) For 600V heaters net weights are same as 480V heaters.
(vi) To estimate shipping weight add 5 lbs to net weight.
(vii) For 600V heaters net weights are same as 480V heaters.
(viii) To estimate shipping weight add 5 lbs to net weight.
(ix) 9 - 23 KW Heaters not available for TC*210C.
(x) 9 - 23 KW Heaters not available for TC*210C.

Table 87. Factory Installed Options (FIOPS) Net Weights[(i),(ii),(iii)]

Accessory	Weight	Unit Model Number
High Efficiency Motors[(iv)]	49	T/YC*150-181 standard size motor
	36	T/YC*210-241 standard size motor
		T/YC*150-181 oversize motor
	0	T/YC*210-241 oversize motor
		T/YC*300-301 standard size motor
Hinged Doors	27	All T/YC* units
Powered Convenience Outlet	38	All T/YC* units
Through the Base Electrical	23	All T/YC* units
Unit Mounted Circuit Breaker	5	All T/YC* units except those with 54&72 kW heaters & 208/230V
	10	All T/YC* units with 54&72 kW heaters & 208/230V
Unit Mounted Disconnect	5	All T/YC* units except those with 54&72 kW heaters & 208/230V
	10	All T/YC* units with 54&72 kW heaters & 208/230V
Smoke Detectors		
Supply/Return	5	All T/YC* units
Stainless Steel Heat Exchanger	50 (150 MBh)	YC*150,151 low heat
	50 (250 MBh)	YC*150,151 high heat
		YC*180,181,210,211,240,241,300,301 low heat
	75 (350 MBh)	YC*180,181,210,211 high heat
	75 (400 MBh)	YC*240,241,300,301 high heat
Tool-less Hail Guard	38	T/YC*150,151,180,210
	43	T/YC*181,211,240,241,300,301
Novar 2024	7	All T/YC* units
Novar 3051	5	All T/YC* units

(i) Weights for FIOP accessories not listed are >5 lbs.
(ii) Net weight should be added to unit weight when ordering factory installed accessories.
(iii) See Table 85, Table 86 for standard factory installed economizer and oversized motors.
(iv) Standard factory installed motors are already included in unit net and shipping weights. Values shown for high efficiency motors are in addition to the standard motor weight.
* Indicates both downflow and horizontal units.

Mechanical Specifications

General

The units shall be dedicated downflow or horizontal airflow. The operating range shall be between 115°F and 0°F in cooling as standard from the factory for all units. Cooling performance shall be rated in accordance with ARI testing procedures. All units shall be factory assembled, internally wired, fully charged with R-22, and 100 percent run tested to check cooling operation, fan and blower rotation and control sequence, before leaving the factory. Wiring internal to the unit shall be colored and numbered for simplified identification. Units shall be UL listed and labeled, classified in accordance to UL 1995/ CAN/CSA No. 236-M90 for Heat Pumps. Canadian units shall be CSA Certified.

Casing

Unit casing shall be constructed of zinc coated, heavy gauge, galvanized steel. Exterior surfaces shall be cleaned, phosphatized, and finished with a weather-resistant baked enamel finish. Unit's surface shall be tested 500 hours in a salt spray test in compliance with ASTM B117. Cabinet construction shall allow for all maintenance on one side of the unit. In order to ensure a water and air tight seal, service panels shall have lifting handles and no more than three screws to remove. All exposed vertical panels and top covers in the indoor air section shall be insulated with a 1/2 inch, 1 pound density foil-faced, fire-resistant, permanent, odorless, glass fiber material. The base of the downflow unit shall be insulated with 1/2 inch, 1 pound density foil-faced, closed-cell material. The downflow unit's base pan shall have no penetrations within the perimeter of the curb other than the raised 11/8 inch high supply/return openings to provide an added water integrity precaution, if the condensate drain backs up. The base of the unit shall have provisions for forklift and crane lifting.

Unit Top

The top cover shall be one piece, or where seams exist, double hemmed and gasket sealed to prevent water leakage.

Filters

Two inch standard filters shall be factory supplied on all units. Optional two inch pleated media filters shall be available.

Compressors

All units shall have direct-drive, hermetic, scroll type compressors with centrifugal type oil pumps. Motor shall be suction gas-cooled and shall have a voltage utilization range of plus or minus 10 percent of nameplate voltage. Internal overloads shall be provided with the scroll compressors. All models shall have crankcase heaters, low and high pressure control as standard.

Crankcase Heaters

These band or insertion heaters provide improved compressor reliability by warming the oil to prevent migration during off-cycles or low ambient conditions. These are standard on all Voyager models.

Refrigerant Circuits

Each refrigerant circuit shall have independent fixed orifice or thermostatic expansion devices, service pressure ports, and refrigerant line filter driers factory installed as standard. An area shall be provided for replacement suction line driers.

Evaporator and Condenser Coils

Internally finned, 3/8" copper tubes mechanically bonded to a configured aluminum plate fin shall be standard. Coils shall be leak tested at the factory to ensure the pressure integrity. The evaporator coil and condenser coil shall be leak tested to 200 psig and pressure tested to 450 psig. All dual compressor units shall have intermingled evaporator coils. Sloped condensate drain pans are standard. Patent-pending 1+1+1 condenser coil, permanently gapped for easy cleaning is available.

Gas Heating Section

The heating section shall have a drum and tube heat exchanger design using corrosion resistant steel components. A forced combustion blower shall supply premixed fuel to a single burner ignited by a pilotless hot surface ignition system. In order to provide reliable operation, a negative pressure gas valve shall be used that requires blower operation to initiate gas flow. On an initial call for heat, the combustion blower shall purge the heat exchanger 45 seconds before ignition. After three unsuccessful ignition attempts, the entire heating system shall be locked out until manually reset at the thermostat. Units shall be suitable for use with natural gas or propane (field installed kit) and shall also comply with California requirements for low NOx emissions. The 12½-25 tons shall have two stage heating (Gas/Electric Only).

Outdoor Fans

The outdoor fan shall be direct-drive, statically and dynamically balanced, draw-through in the vertical discharge position. The fan motor(s) shall be permanently lubricated and shall have built-in thermal overload protection.

Indoor Fan

Units above shall have belt driven, FC centrifugal fans with adjustable motor sheaves. Units with standard motors shall have an adjustable idler-arm assembly for quick-adjustment of fan belts and motor sheaves. All motors shall be thermally protected. Oversized motors shall be available for high static application. All indoor fan motors meet the U.S. Energy Policy Act of 1992 (EPACT).

Controls

Unit shall be completely factory wired with necessary controls and contactor pressure lugs or terminal block for power wiring. Unit shall provide an external location for mounting a fused disconnect device. ReliaTel controls shall be provided for all 24 volt control functions. The resident control algorithms shall make all heating, cooling, and/or ventilating decisions in response to electronic signals from sensors measuring indoor and outdoor temperatures. The control algorithm maintains accurate temperature control, minimizes drift from set point, and provides better building comfort. A centralized control shall provide anti-short cycle timing and time delay between compressors to provide a higher level of machine protection.

Defrost Controls

Adaptive demand defrost shall be provided to permit defrost wherever coil icing conditions begin to significantly reduce unit capacity.

Factory Installed Options

Black Epoxy Coated Pre-Coated Coils

The black epoxy coils have a thermoset vinyl coating that is bonded to the aluminum fin stock prior to the fin-stamping process. The pre-coated coils are an economical option for protection in mildly corrosive environments.

Dehumidification Option

The dehumidification (hot gas reheat) option shall provide increased dehumidification. The option shall consist of a hot-gas reheat coil located on the leaving air side of the evaporator coil prepiped and circuited. Low pressure switch(es) and thermostatic expansion valve(s) TXV are standard. Frostat™ , ReliaTel options module, and 2" pleated filters are required but not standard. They must be ordered and configured separately.

High Efficiency Motors

This option is available with efficiency ratings from 86.5 up to 91.0. It is not available for all models.

High Pressure Cutout

This option is offered for units that do not have High Pressure cutout as standard.

Hinged Access Doors

Sheet metal hinges are available on the Filter/Evaporator Access Door and the Compressor/Control Access Door. This option is available on all downflow models.

Powered or Unpowered Convenience Outlet

This option is a GFCI, 120v/15amp, 2 plug, convenience outlet, either powered or unpowered. When the convenience outlet is powered, a service receptacle disconnect will be available. The convenience outlet is powered from the line side of the disconnect or circuit breaker, and therefore will not be affected by the position of the disconnect or circuit breaker. This option can only be ordered when the Through the Base Electrical with either the Disconnect Switch, or Circuit Breaker, option is ordered. This option is available on all downflow models (Gas/Electric Only).

Stainless Steel Heat Exchanger

Gas heat exchanger shall be of drum and tube design constructed from a minimum 304 Grade stainless steel. The stainless steel heat exchanger shall have a 10-year warranty as standard (Gas/Electric Only).

Supply and/or Return Air Smoke Detector

With this option installed, if smoke is detected, all unit operation will be shut down. Reset will be manual at the unit. Return Air Smoke Detectors require minimum allowable airflow when used with certain models. See the Installation, Operation, and Maintenance (IOM) manual for the models affected and the minimum allowable airflow required. This option is available on all downflow models.

Through the Base Electrical with Circuit Breaker

This option is a thermal magnetic, molded case, HACR Circuit Breaker with provisions for through the base electrical connections. The circuit breaker will be installed in a water tight enclosure in the unit with access through a swinging door. Factory wiring will be provided from the switch to the unit high voltage terminal block. The circuit breaker will provide overcurrent protection, be sized per NEC and UL guidelines, and be agency recognized by UL/CSA. This option is available on all downflow models.

Through the Base Electrical With Disconnect Switch

Three-pole, molded case, disconnect switch with provisions for through the base electrical connections are available. The disconnect switch will be installed in the unit in a water tight enclosure with access through a swinging door. Factory wiring will be provided from the switch to the unit high voltage terminal block. The switch will be UL/CSA agency recognized. Note: The disconnect switch will be sized per NEC and UL guidelines but will not be used in place of unit overcurrent protection. This option is available on all downflow models.

Through the Base Utilities Access

An electrical service entrance shall be provided allowing electrical access for both control and main power connections inside the curb and through the base of the unit. Option will allow for field installation of liquid-tight conduit and an external field installed disconnect switch.

Two-Inch Pleated Filters

Two inch pleated media filters shall be available on all models.

Factory or Field Installed Options

Clogged Filter/Fan Failure Switch

A dedicated differential pressure switch is available to achieve active fan failure indication and/or clogged filter indication. These indications will be registered with either a zone sensor with status indication lights or an Integrated Comfort™ System.

Differential Pressure Switches

These options allow for individual fan failure and dirty filter indication.

The fan failure switch will disable all unit functions and "flash" the Service LED on the zone sensor. The dirty filter switch will light the Service LED on the zone sensor and will allow continued unit operation.

Discharge Air Sensing Kit

This kit provides true discharge air sensing in heating models. This sensor is a status indicator readable through Tracer™ or Tracker™. The kit is functional only with the ReliaTel Options Module.

Economizer - Downflow

The assembly includes fully modulating 0-100 percent motor and dampers, barometric relief, minimum position setting, preset linkage, wiring harness with plug, fixed dry bulb and spring return actuator. The barometric relief damper shall be standard with the downflow economizer and shall provide a pressure operated damper that shall be gravity closing and shall prohibit entrance of outside air during the equipment "off" cycle. Solid state enthalpy and differential enthalpy control shall be field-installed.

Electric Heaters

Electric heat modules shall be available for installation within the basic unit. Electric heater elements shall be constructed of heavy-duty nickel chromium elements internally delta connected for 240 volt, wye connected for 480 and 600 volt. Staging shall be achieved through ReliaTel. Each heater package shall have automatically reset high limit control operating through heating element contactors. All heaters shall be individually fused from the factory, where required, and shall meet all NEC and CEC requirements when properly installed. Power assemblies shall provide single-point connection. Electric heat modules shall be UL listed or CSA certified. If ordering the Through the Base Electrical option with an Electric Heater, the heater must be factory installed.

Frostat

This option is to be utilized as a safety device. The Frostat opens when temperatures on the evaporator coil fall below 10°F. The temperature will need to rise to 50°F before closing. This option should be utilized in low airflow or high outside air applications (Cooling Only).

LonTalk® Communications Interface

The LonTalk communications interface, when installed in a Voyager unit, allows the unit to communicate as a Tracer™ LCI-V device or directly with generic LonTalk Network Building Automation System Controls.

Oversized Motors

Oversized motors shall be available for high static applications.

Reference or Comparative Enthalpy

Reference Enthalpy is used to measure and communicate outdoor humidity. The unit receives and uses this information to provide improved comfort cooling while using the economizer. Comparative Enthalpy measures and communicates humidity for both outdoor and return air conditions, and return air temperature. The unit receives and uses this information to maximize use of economizer cooling, and to provide maximum occupant comfort control. Reference or Comparative Enthalpy option shall be available when a factory or field installed Downflow Economizer is ordered. This option is available on all downflow models.

Tool-less Hail Guards

Tool-less, hail protection quality coil guards are available for condenser coil protection.

Trane Communication Interface

This factory or field-installed option shall be provided to interface ReliaTel™ controlled units with the Trane Integrated Comfort™ systems.

Field Installed Options

CO_2 Sensing

The CO_2 sensor has the ability to monitor space occupancy levels within the building by measuring the parts per million of CO_2 (Carbon Dioxide) in the air. As the CO_2 levels increase, the outside air damper modulates to meet the CO_2 space ventilation requirements.

Digital Display Zone Sensor

The Digital LCD (Liquid Crystal Display) zone sensor has the look and functionality of standard zone sensors. This sensor includes a digital display of set point adjustment and space temperature in F (Fahrenheit) or C (Celsius). Includes FAN and SYSTEM buttons (supports the service functions of the standard sensor). E-squared memory stores last programmed set points. Requires 24 VAC (Volts AC). This sensor should be utilized with ReliaTel™ controls.

Dual Thermistor Remote Zone Sensor

This sensor will allow the customer to reduce the total number of remote sensors to obtain space temperature averaging. This sensor should be utilized with ReliaTel controls.

High Static Drive

The high static drive option shall allow the standard motor on the 12½ and 20 ton units to operate with improved external static capabilities.

Manual Outside Air Damper

The rain hood and screen shall provide up to 25 percent outside air.

Motorized Outside Air Dampers

Manually set outdoor air dampers shall provide up to 50 percent outside air. Once set, outdoor air dampers shall open to set position when indoor fan starts. The damper shall close to the full closed position when indoor fan shuts down.

Powered Exhaust

The powered exhaust shall provide exhaust of return air, when using an economizer, to maintain better building pressurization.

Roof Curb - Downflow

The roof curb shall be designed to mate with the downflow unit and provide support and a water tight installation when installed properly.

The roof curb design shall allow field-fabricated rectangular supply/return ductwork to be connected directly to the curb. Curb design shall comply with NRCA requirements. Curb shall be shipped knocked down for field assembly and shall include wood nailer strips.

Economizer - Horizontal

The horizontal economizer shall contain the same features as the downflow economizer with the exception of barometric relief.

Remote Potentiometer

The minimum position setting of the economizer shall be adjusted with this accessory.

Ventilation Override Accessory

With the Ventilation Override Accessory installed, the unit can be set to transition up to 3 different pre-programmed sequences for Smoke Purge, Pressurization, and Exhaust. The transition occurs when a binary input on the RTOM is closed (shorted). This would typically be a hard wired relay output from a smoke detector or fire control panel.

Zone Sensors

This option shall be provided to interface with the Micro equipped Voyagers and shall be available in either manual, automatic, programmable with night setback, with system malfunction lights or remote sensor options.

ARI Standard
210/240 UAC

Trane
A business of American Standard Companies
www.trane.com

For more information, contact your local Trane office or e-mail us at comfort@trane.com

Literature Order Number	RT-PRC024-EN
Date	12/07/06
Supersedes	RT-PRC024-EN (08/06)
Stocking Location	Webb/Mason

Trane has a policy of continuous product and product data improvement and reserves the right to change design and specifications without notice.