GBC Signmaker Roll Laminator

Instruction Manual

For Models:

Signmaker 25 Roll Laminator
Signmaker 44 Roll Laminator

Provided by

MyBinding.com®

When Image Matters.

Call Us at 1-800-944-4573

SignMaker 25 & 44

INSTALLATION & OPERATION MANUAL

Document Number: 930-112 REV: - REV DATE: 10-4-04

©2004 GENERAL BINDING CORPORATION ALL RIGHTS RESERVED.
Do not duplicate without written permission.

Table of Contents

1.0 Safety 1-1
- General 1-1
- Electrical 1-1

2.0 Warranty 2-1
- Limited 90-Day Warranty 2-1

3.0 Specifications 3-1

4.0 Pre-Installation and Installation 4-1

5.0 Feature Guide 5-1
- A. POWER SWITCH: 5-1
- B. FAN SWITCH: 5-1
- C. CONTROL PANEL: 5-1
- D. FEED TABLE: 5-2
- E. SAFETY SHIELD: 5-2
- F. TABLE INTERLOCK LATCH: 5-2
- G. FEED GUIDE: 5-2
- H.UPPER HEAT ROLLER: 5-3
- I. IDLER BAR: 5-3
- J. PULL ROLLERS: 5-3
- K. CIRCUIT BREAKER: 5-3
- L. FILM SHAFT: 5-3
- M. LOCKING CORE ADAPTORS: 5-3
- N. FILM WEB: 5-3
- O. NIP POINT: 5-4
- P. ROLLER PRESSURE HANDLE: 5-4
- Q. TAKE UP ASSEMBLY: 5-4
- R. FILM TENSION ADJUSTMENT: 5-4

6.0 Operation 6-1
- Safety Shield Removal 6-2
- Film Loading and Threading 6-2
- Method Using Film Threading Card 6-3
- Method For Tacking New Film to Existing Film 6-5
- Mounting 6-6
- Mounting and Overlamination 6-6
- Decaling; PSA or Thermal film - Two Passes 6-7
- Mounting Only 6-8
- AccuShield™ Film 6-8
- Running Foil 6-8
- Film Alignment 6-9
- Film Tension Adjustment 6-9
- Clearing a Film Jam (Wrap-up) 6-9

7.0 Operator Maintenance 7-1
- Caring For The GBC SignMaker Series Laminator 7-1
- Trouble Shooting Guide 7-2
- Lamination Guide 7-3

©2004 General Binding Corporation

©2004 General Binding Corporation

The information in this publication is provided for reference and is believed to be accurate and complete. GBC is not liable for errors in this publication or for incidental or consequential damage in connection with the furnishing or use of the information in this publication, including, but not limited to, any implied warranty of fitness or merchantability for any particular use.

GBC reserves the right to make changes to this publication and to the products described in it without notice. All specifications and information concerning products are subject to change without notice.

Reference in this publication to information or products protected by copyright or patent does not convey any license under the rights of GBC or others. GBC assumes no liability arising from infringements of patents or any other rights of third parties.

This publication is copyrighted © 2004 by GBC. All rights reserved. The information contained in this publication is proprietary and may not be reproduced, stored, transmitted, or transferred, in whole or in part, in any form without the prior and express written permission of GBC.

©2004 General Binding Corporation

1.0 Safety

YOUR SAFETY AS WELL AS THE SAFETY OF OTHERS IS IMPORTANT TO GBC. IN THIS INSTRUCTION MANUAL AND ON THE PRODUCT, YOU WILL FIND IMPORTANT SAFETY MESSAGES REGARDING THE PRODUCT. READ THESE MESSAGES CAREFULLY. READ ALL OF THE INSTRUCTIONS AND SAVE THESE INSTRUCTIONS FOR LATER USE.

THE SAFETY ALERT SYMBOL PRECEDES EACH SAFETY MESSAGE IN THIS INSTRUCTION MANUAL. THE SYMBOL INDICATES A POTENTIAL PERSONAL SAFETY HAZARD TO YOU OR OTHERS, AS WELL AS PRODUCT OR PROPERTY DAMAGE.

THE FOLLOWING WARNINGS ARE FOUND ON THE SignMaker:

THIS SAFETY MESSAGE MEANS THAT YOU COULD BE SERIOUSLY HURT OR KILLED IF YOU OPEN THE PRODUCT AND EXPOSE YOURSELF TO HAZARDOUS VOLTAGE.

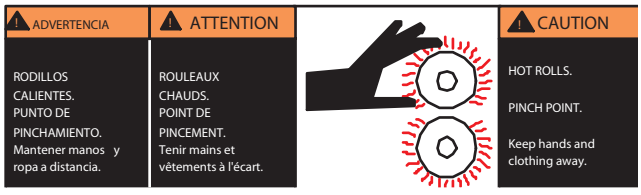

THIS SAFETY MESSAGE MEANS THAT YOU COULD BE BURNED AND YOUR FINGERS AND HANDS COULD BE TRAPPED AND CRUSHED IN THE HOT ROLLERS. CLOTHING, JEWELRY AND LONG HAIR COULD BE CAUGHT IN THE ROLLERS AND PULL YOU INTO THEM.

WARNING: DO NOT CONNECT THE SignMaker SERIES LAMINATOR TO AN ELECTRICAL SUPPLY OR ATTEMPT TO OPERATE THE LAMINATOR UNTIL YOU HAVE COMPLETELY READ THESE INSTRUCTIONS. MAINTAIN THESE INSTRUCTIONS IN A CONVENIENT LOCATION FOR FUTURE REFERENCE.

WARNING: TO GUARD AGAINST INJURY, THE FOLLOWING SAFETY PRECAUTIONS MUST BE OBSERVED IN THE INSTALLATION AND USE OF THE LAMINATOR.

General

Keep hands, long hair, loose clothing, and articles such as necklaces or ties away from the front of the heat and pull rollers to avoid entanglement and entrapment.

The heat rollers can reach temperatures over 300° F. Avoid contact with the heat rollers during operation or shortly after power has been removed from the laminator.

Do not use the laminator for other than its intended purpose.

Do not place the laminator on an unstable cart, stand or table. An unstable surface may cause the laminator to fall resulting in serious bodily injury. Avoid quick stops, excessive force and uneven floor surfaces when moving the laminator on a cart or stand.

Do not defeat or remove electrical and mechanical safety equipment such as interlocks, shields and guards.

Do not insert objects unsuitable for lamination or expose the equipment to liquids.

Turn off machine when not in use for an extended period of time.

Electrical

The laminator should be connected only to a source of power as indicated in these instructions and on the serial plate located on the rear of the laminator. Contact an electrician should the attachment plug provided with the laminator not match the receptacles at your location.

CAUTION: The receptacle must be located near the equipment and easily accessible.

Disconnect the attachment plug from the receptacle to which it is connected and keep the power supply cord in your possession while moving the laminator.

Do not operate the laminator with a damaged power supply cord or attachment plug, upon occurrence of a malfunction, or after the laminator has been damaged. Contact GBC's Technical Service Department or your dealer/distributor for assistance.

©2004 General Binding Corporation

WARNING: Do not attempt to service or repair the laminator.

Disconnect the plug from the receptacle and contact GBC's Technical Department or your dealer/distributor when one or more of the following has occurred.

- The power supply cord or attachment plug is damaged.
- Liquid has been spilled into the laminator.
- The laminator is malfunctioning after being mishandled.
- The laminator does not operate as described in these instructions.

©2004 General Binding Corporation

2.0 Warranty

Limited 90-Day Warranty

GBC warrants to the original purchaser for a period of ninety days on labor and one year on parts after installation that this laminator is free from defects in workmanship and material under normal use and service. GBC's obligation under this limited warranty is limited to replacement or repair, at GBC's option, of any part found defective by GBC without charge for material or labor.

THIS LIMITED WARRANTY IS IN LIEU OF ALL OTHER WARRANTIES EXPRESSED OR IMPLIED. WARRANTIES OF MERCHANTABILITY OR FITNESS FOR A PARTICULAR PURPOSE ARE EXPRESSLY EXCLUDED. ANY REPRESENTATIONS OR PROMISES INCONSISTENT WITH, OR IN ADDITION TO, THIS LIMITED WARRANTY ARE UNAUTHORIZED AND SHALL NOT BE BINDING UPON GBC. IN NO EVENT SHALL GBC BE LIABLE FOR ANY SPECIAL, INCIDENTAL, OR CONSEQUENTIAL DAMAGES, WHETHER OR NOT FORESEEABLE.

This limited warranty shall be void if the laminator has been misused; mishandled; damaged by negligence, by accident, during shipment, or due to exposure to extreme conditions; repaired, altered, moved, or installed by anyone other than GBC or its authorized agents; or if incompatible film was used. GBC's obligation under this limited warranty does not include routine maintenance, cleaning, adjustment, normal cosmetic or mechanical wear, or freight charges.

Without limiting the generality of the previous paragraph, GBC's obligation under this limited warranty does not include:

1. Damage to the rollers caused by knives, razors, or other sharp tools; by any foreign objects falling into the working area of the laminator; or by cleaning the laminator with solutions or materials that harm its surfaces;

2. Damage caused by adhesives; nor

3. Damage caused by lifting, tilting or attempting to position the laminator other than rolling it on its castors across even surfaces.

FOR EUROPEAN UNION RESIDENTS ONLY: This guarantee does not affect the legal rights which consumers have under applicable national legislation governing the sale of consumer goods.

The information in this publication is provided for reference and is believed to be accurate and complete. GBC is not liable for errors in this publication or for incidental or consequential damage in connection with the furnishing or use of the information in this publication, including, but not limited to, any implied warranty of fitness or merchantability for any particular use.
GBC reserves the right to make changes to this publication and to the products described in it without notice. All specifications and information concerning products are subject to change without notice.
Reference in this publication to information or products protected by copyright or patent does not convey any license under the rights of GBC or others. GBC assumes no liability arising from infringements of patents or any other rights of third parties.
This publication is copyrighted © 2004 by GBC. All rights reserved. The information contained in this publication is proprietary and may not be reproduced, stored, transmitted, or transferred, in whole or in part, in any form without the prior and express written permission of GBC.

©2004 General Binding Corporation

3.0 Specifications

	SignMaker 25	SignMaker 44
Operating Speed:	1.5 fpm (45.6cm) to 5 fpm(1.6 m)	1.5 fpm (45.6cm) to 5 fpm(1.6 m)
Dimensions:		
- Width:	39" (99cm)	56" (142cm)
- Height:	18" (46 cm)	21" (53 cm) (48" (122 cm) w/ optional stand)
- Depth:	21" (53 cm)	21" (53 cm)
- Weight	140 lbs. (64 kg)	225 lbs. (102 kg) 240 lbs. (109 kg) w/ optional stand
Electrical Requirements:		
U.S:		
- Voltage:	120V~60 Hz	120V~60 Hz
- Current:	11 Amps	12 Amps
- Power:	1300 W	1440 W
- U.S. Receptical:	NEMA 5 15R	NEMA 5 15R
European:		
- Voltage:	220V-240V~50/60Hz	220V-240V~50/60Hz
- Current:	9 Amps	10 Amps
- Power:	2000 W	2300 W

©2004 General Binding Corporation

©2004 General Binding Corporation

4.0 Pre-Installation and Installation

Perform only the routine maintenance procedures referred to in these instructions.

WARNING: Do not attempt to service or repair the laminator.

Disconnect the plug from the receptacle and contact GBC's Technical Department or your dealer/distributor when one or more of the following has occurred.

- The power supply cord or attachment plug is damaged.
- Liquid has been spilled into the laminator.
- The laminator is malfunctioning after being mishandled.
- The laminator does not operate as described in these instructions.

1. **Shipping damage should be brought to the immediate attention of the delivering carrier.**
2. Place the SignMaker on a stable flat surface capable of supporting the weight of the machine and any materials. The surface should be at least 30 inches high to assure comfortable positioning during operation. All four rubber support feet should be positioned completely on the supporting surface. The supporting surface may also be large enough to hold the material to be laminated.
3. The laminator should be located so that exiting film drops freely to the floor. Accumulation of laminate immediately behind the laminator as it exits the equipment may cause the film to wrap around the pull rollers, resulting in a "jammed" condition.
4. Avoid locating the laminator near sources of heat or cold. Avoid locating the **laminator in the direct path of forced, heated or cooled air.**
5. Connect the attachment plug provided with the laminator to a suitably grounded outlet only. **Avoid connecting other equipment to the same branch circuit to which the laminator is connected, as this may result in nuisance tripping of circuit breakers or blowing fuses.**

©2004 General Binding Corporation

©2004 General Binding Corporation

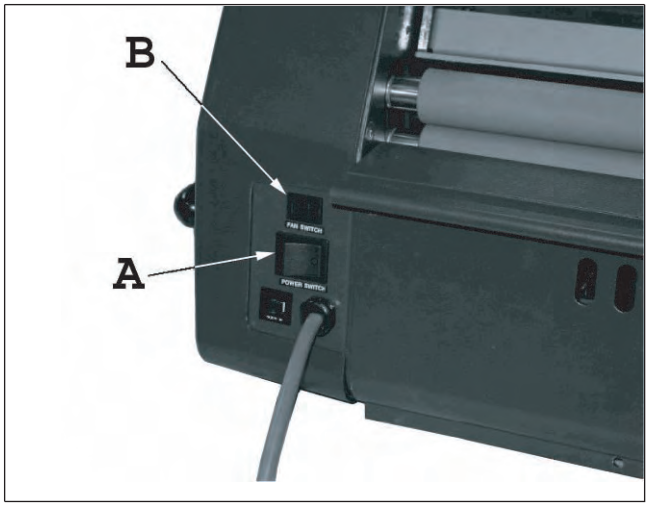

Fig. 2

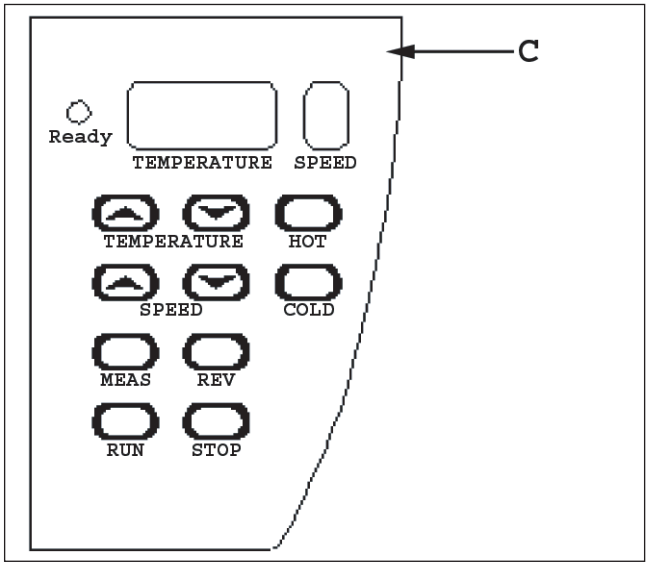

Fig. 2

5.0 Feature Guide

A. POWER SWITCH:

Fig.1.

Located at the back of the machine, the power switch applies power to the laminator. The "**LED**" display panel will illuminate when position marked "**I**" is pushed. The off position, marked "**O**", removes power from the laminator.

B. FAN SWITCH:

Fig. 1.

The fan switch is located in the back of the machine. Power is applied to the fans when the switch is set to the **" I "** position and the **"RUN"** switch is pressed. The off position marked **"O"** removes power from the fans.

C. CONTROL PANEL:

Fig. 2

Display:

"READY": Indicates when the laminator has sufficient heat. It flashes if heat is out of range.

"SPEED": Indicates the speed setting of the motor.

"TEMPERATURE": Displays the programmed temperature setting in either Fahrenheit or Celsius.

Functions:

"HOT": When pressed, automatically sets the temperature to 230 ºF (110 ºC).

"COLD": When pressed, removes power to the heaters for cold lamination.

"RUN": Activates rollers for normal operation.

"STOP": When pressed, stops the rotation of the rollers.

"REV": Reverses roller movement to clear jams and wrap-ups.

"MEAS": Used to read the current temperature of the rollers.

"TEMP" (⌃): Overrides the preset temperature, increasing to the desired setting.

"TEMP" (⌄): Overrides the preset temperature, decreasing to the desired setting.

"SPEED" (⌃): When pressed, increases speed to the desired setting.

"SPEED" (⌄): When pressed, decreasing speed to the desired setting.

©2004 General Binding Corporation

D. FEED TABLE:

The Feed Table, Fig 3, is used to position items for lamination. **The laminator will operate only when the Feed Table and Feed Table Latch are properly installed.**

E. SAFETY SHIELD:

Prevents entanglement, entrapment and inadvertent contact with the heat rollers. T**he laminator will operate only when the Safety Shield is located in the fully locked position. Power to the motor is removed when the shield is removed.**

F. TABLE INTERLOCK LATCH:

Used to lock the Feed Table into position and activate an interlock switch. The interlock latch is located on the left underside of the Feed Table, (Fig 3). **The table cannot be removed without retracting the latch to the right while lifting the table upwards and away from the laminator. The laminator will not operate when the table is removed and/or the interlock latch is retracted.**

G. FEED GUIDE:

The Feed Guide, Fig 3, permits alignment of the item(s) to be laminated. To position the adjustable guide, loosen the knob on the top of the guide, slide it to the desired position and tighten the knob to secure the Feed Guide in place. The Feed Guide is used to keep longer items straight. The Feed Guide may also be used to feed smaller items side by side by positioning the guide towards the center of the Feed Table and placing smaller items against each side of the Feed Guide as they are being introduced into the nip point of the heat rollers.

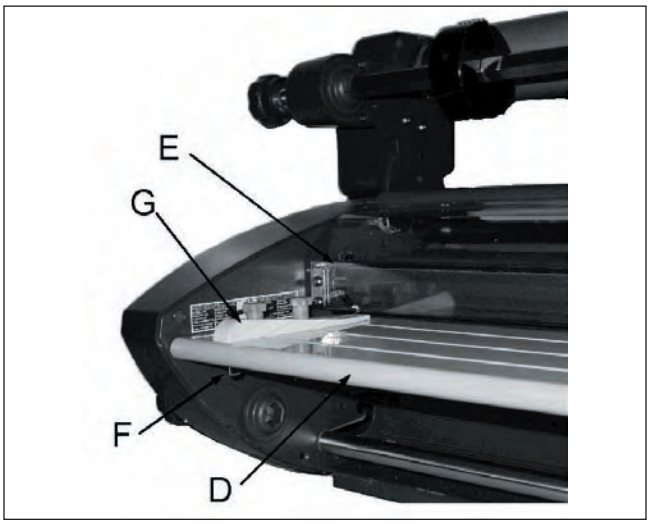

Fig. 3

 ©2004 General Binding Corporation

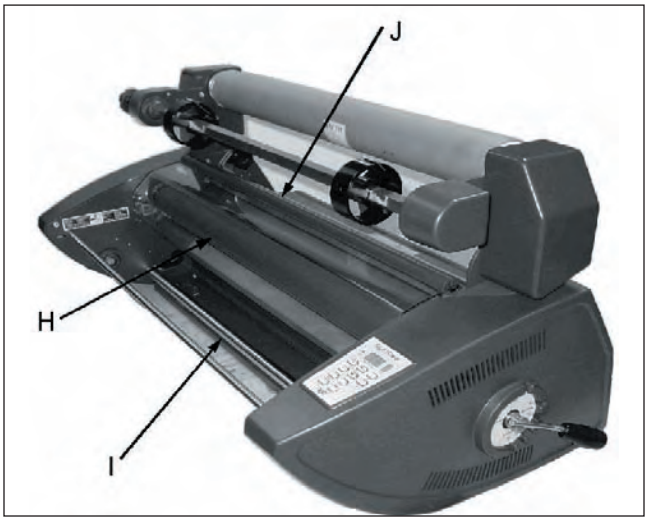

Fig. 4

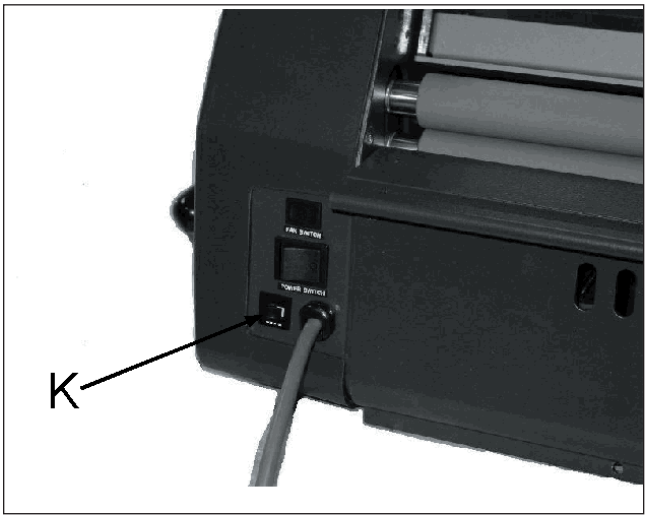

Fig. 5

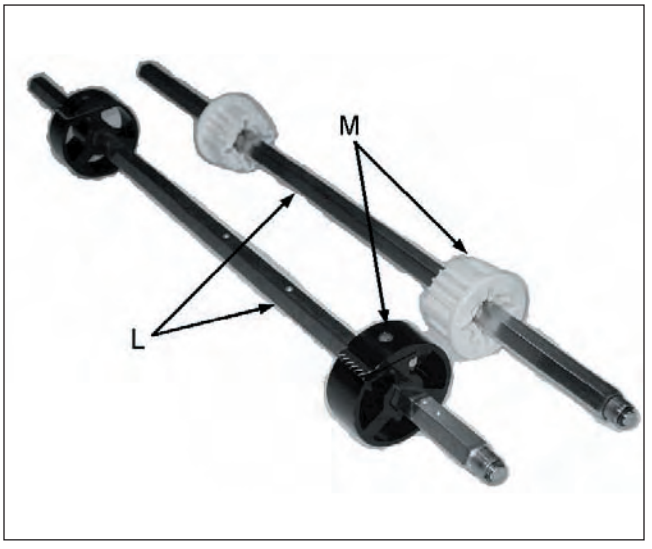

Fig. 6

H.UPPER HEAT ROLLER:
Silicone rubber coated steel tubes heat the laminating film and compress the heated film to the items being laminated. Heat is provided by an internal heating element in the top main roll. The main rollers are motor driven for ease of loading new film (Fig 4).

I. IDLER BAR:
The idler bars, located near each supply roll, are used to direct the film to the main rollers. The bottom Idler Bar is movable to ease film loading (Fig 4).

J. PULL ROLLERS:
The pull rollers, located at the back of the laminator, are motor driven. They simultaneously pull the film and improve the quality of the laminated item (Fig 4).

K. CIRCUIT BREAKER:
Electrical safety device, located on the back of the laminator near the power cord, can be reset by the operator if tripped (Fig 5).

WARNING: If the breaker trips a second time after being reset, contact your local GBC Technical Representative or dealer/distributor for assistance.

L. FILM SHAFT:
The film shaft holds the film supply on the machine, (Fig 6).

M. LOCKING CORE ADAPTORS:
Hold and lock the rolls of film on the shafts to prevent side to side shifting, (Fig 6).

N. FILM WEB: (Not Shown)
Laminating film loaded into the machine.

©2004 General Binding Corporation

O. NIP POINT: (Not Shown)

The point at which the top and bottom rollers come into contact and the point at which the items for lamination are introduced into the laminator.

P. ROLLER PRESSURE HANDLE:

Adjusts the amount of roller pressure needed for various laminating and mounting applications, (Fig 7).

Laminating: adhere in multiple layers. Mounting: bond to a frame or support.

Heavy Gauge: laminating films thicker than 1.5 mil / 38 mic

Q. TAKE UP ASSEMBLY:

Rewinds the release liner of the pressure sensitive films, mounting films and used foil. (Fig 8).

R. UNWIND MECHANISM & FILM TENSION ADJUSTMENT:

There are two unwind mechanism, the upper unwind in which its right and left brackets are reversible so they can positioned either in front of the rewind or behind it, depending on the running application. The lower unwind is fixed and located under the bottom main roller. See figure 9

Fig. 7

Fig. 8

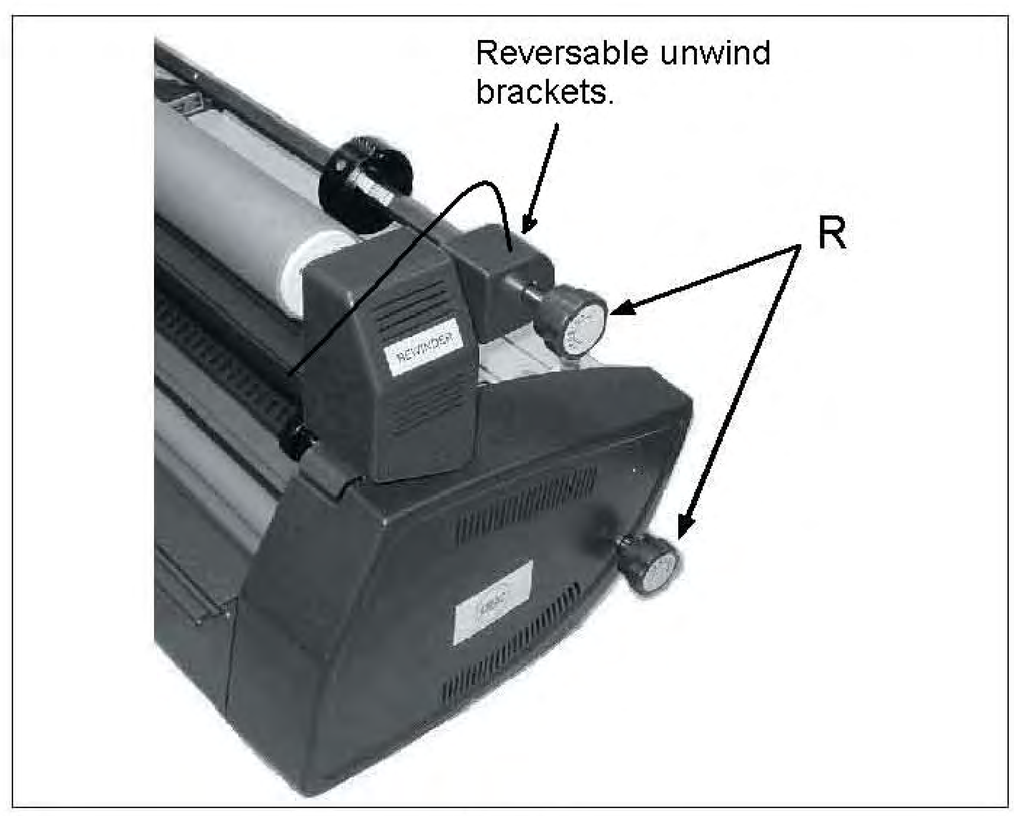

Fig. 9

©2004 General Binding Corporation

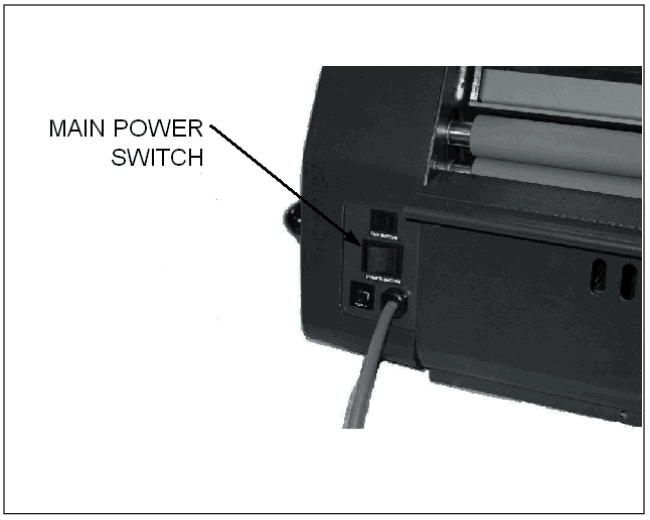

Fig. 10

6.0 Operation

1. Turn the laminator on (**I**) at the main power switch located at the back of the machine (Fig 10).
2. **CAUTION:** Make sure the safety shield and feed tray are in their proper positions.
3. The laminator will automatically default to the "**COLD**" setting which is used for PSA (pressure sensitive adhesive) film. For thermal film press "**HOT**", when pressed, automatically sets the temperature to 230 °F (110 °C).
4. **Do not begin laminating until the "READY" LED illuminates.** The normal warm-up time is approximately 10 minutes.
5. Position the roller gap handle to correspond to the gauge of film laminated.
6. Position the item(s) to be laminated on the Feed Table.
7. Press "**RUN**". The rollers will begin to turn. Wait for the heat line to disappear, then push the item(s) into the nip point of the heat rollers. Additional items can be laminated without stopping and starting the laminator.
8. Should a jam occur (wrap-up), press "**STOP**". Refer to the section CLEARING A FILM JAM for specific instructions.
9. Stop the laminator when all of the items have completely exited the rear of the machine.
10. Allow the laminator to remain powered if it is anticipated that it will be used within a short period of time.

©2004 General Binding Corporation

Safety Shield Removal

1. Lift the shield off.
2. To install reverse the step from above.

FEED TABLE REMOVAL

Refer to Fig 11 and follow the procedures to remove the feed table:

1. Slide the Feed Table latch to the right.
2. Lift the table upwards and away from the laminator.

Reverse this process to re-install the shield.

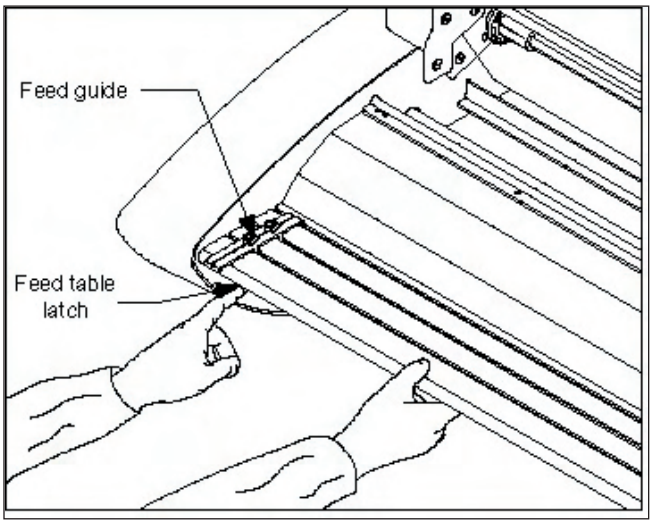

Fig. 11

Film Loading and Threading

Refer to the film threading diagram for the application you are running for an illustration of properly threading film.

The SignMaker 25 uses Poly-In film. Poly-In means the adhesive side of the film is on the inside of the web (Fig 12). The SignMaker 44 uses Poly-Out Thermal films and Poly-In PSA films. The shiny side of clear film must contact the heat rollers. The dull side of the film contains the adhesive. Use extreme caution when loading delustered (matte) film as both sides appear dull.

The top and bottom rolls of laminating film must be of the same width and be present simultaneously. A small amount of adhesive will “squeeze out” during lamination. Hardened adhesive deposits can damage the main rollers. To avoid any damage, rotate the rollers at slowest speed if the "**READY**" LED is not illuminated. Refer to the section entitled CARING FOR THE SignMaker SERIES LAMINATOR for instructions regarding removal of the accumulated adhesive.

Adhesive will deposit on the rollers if:

- Only one roll is used.
- Different widths of rolls are loaded together.
- Either roll is loaded adhesive side against a heat roller.
- One or both rolls of film are allowed to run completely off its core.

Always change the top and bottom supply rolls at the same time. Near the end of each roll of GBC laminating film is a label stating “Warning-End of Roll”. The appearance of this label on either the top or bottom roll requires that new rolls of film be installed as soon as the item presently being laminated completely exits the rear of the laminator. Do not introduce any additional items into the laminator when the warning label is visible.

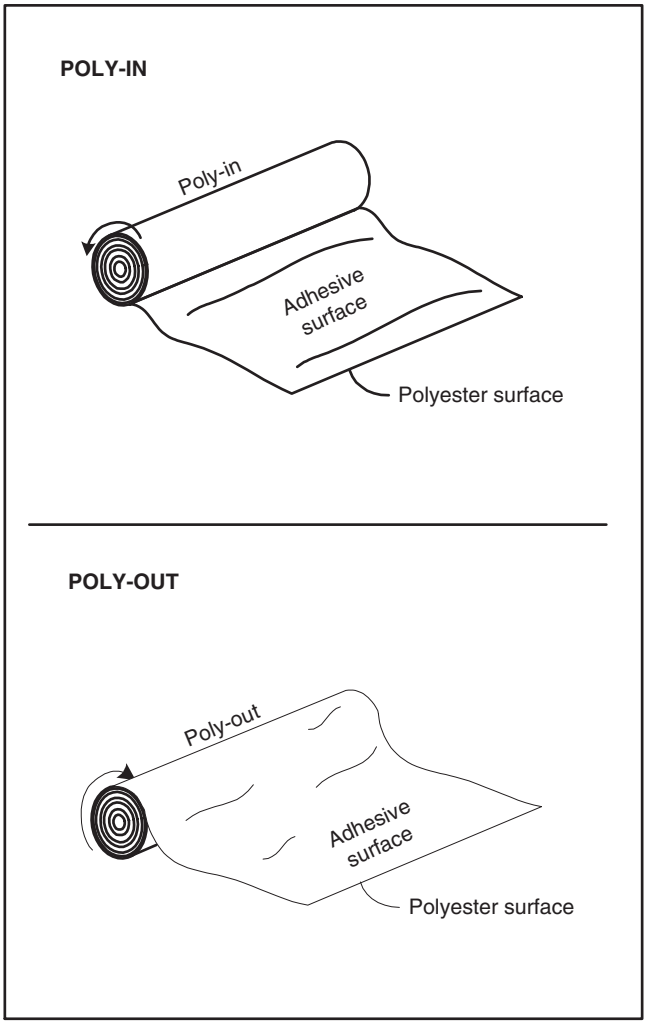

Fig. 12

©2004 General Binding Corporation

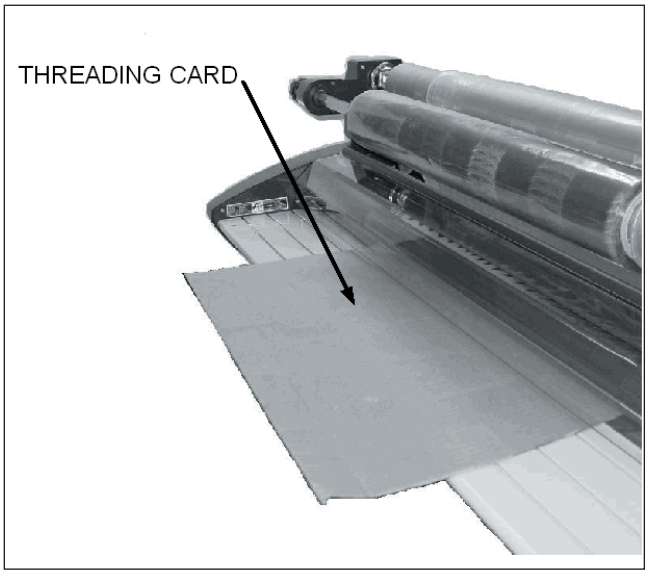

Fig. 13

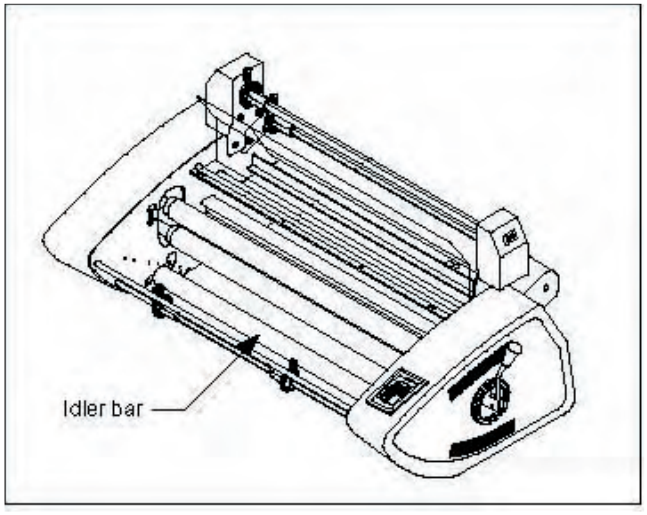

Fig. 14

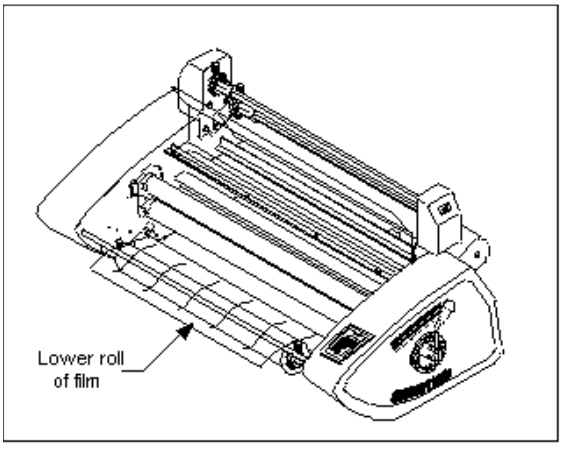

Fig. 15

Method Using Film Threading Card

The following procedure uses the film threading card provided with new rolls of GBC film. A threading board is a scrap of cardboard or poster board that is used to help guide the film (Fig 13)

1. Turn the mail's power switch on (I). Remove feed table.
2. Cut remaining top and bottom film webs between supply rolls and main rollers. Be careful not to cut main rollers.
3. Remove the safety shield and pull the top piece of film down.
4. Remove the feed table.
5. Lower the bottom idler, (Fig. 14).
6. Unroll 2ft. (61cm) of film. Push the leading under and around the front support for the feed table. (Fig. 15).
7. Remove top film supply roll from laminator. Ensure the film will unroll from the bottom, for poly-in film, and from the top for poly-out film once the supply shaft is placed back on the laminator.

13. Unroll 2 ft. (61 cm) of film. Drape the film over the top idler bar for poly-in film and under the bar for poly-out film, (Fig 16).

14. Apply the bottom film to the top film so that they adhere together. Reinstall the feed table.

15. Slide the threading card between the feed tray and the film web lying on the tray, and gently push the threading card into the nip area of the main rollers (Fig 17).

16. Replace the safety shield then push "**RUN**". Watch the leading edge of the threading card to ensure that it enters the nip area of the heat rollers and is being pulled into the laminator. The card will guide the web of both film rolls into the heat rollers. Push "**STOP**" once the threading card has exited the rear of the laminator.

17. Check film alignment. See section entitled FILM ALIGNMENT PROCEDURE for instructions if installed film needs alignment.

CAUTION: THE FOLLOWING PROCEDURE IS PERFORMED WHILE THE LAMINATOR IS HOT. USE EXTREME CAUTION. AVOID CONTACT WITH THE HEAT ROLLER.

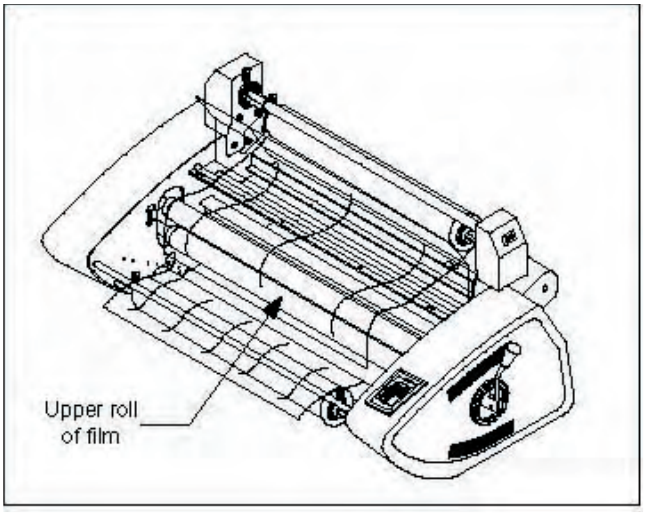

Fig. 16

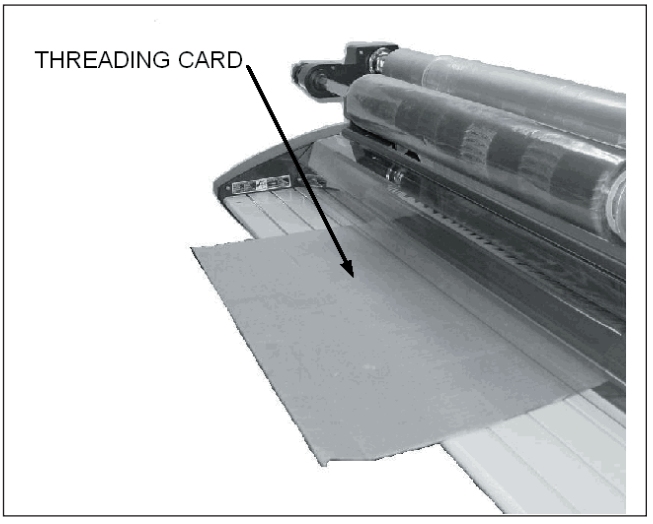

Fig. 17

©2004 General Binding Corporation

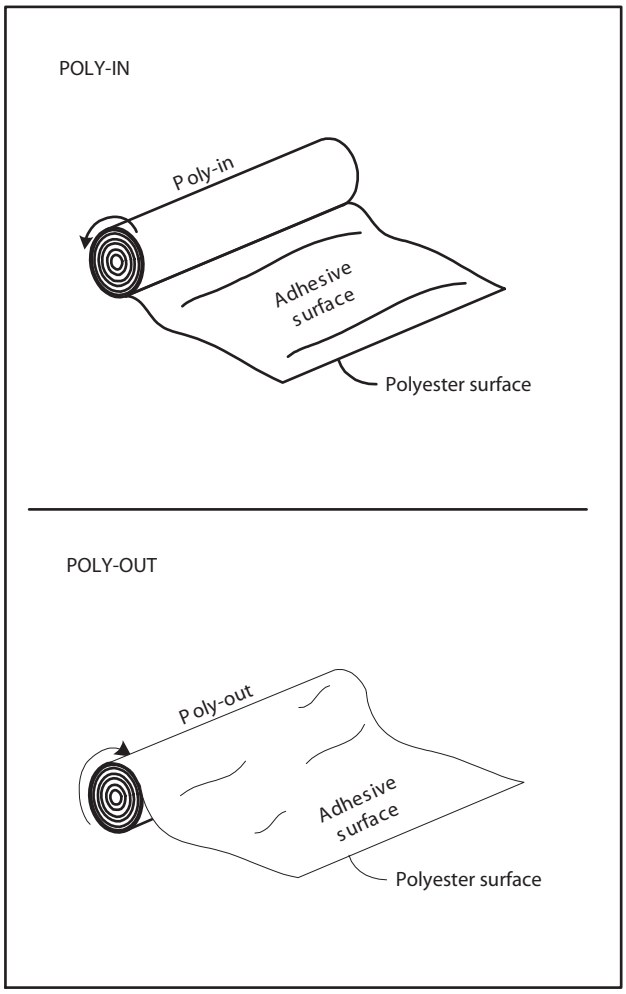

Fig. 18

Method For Tacking New Film to Existing Film

The following describes a method for loading film whereby the existing film present on the main rollers may be used in place of the threading card to draw the new film through the laminator. The adhesive of the existing film must be tacky or liquefied. Leading edges of the new film will be overlapped onto the tacky adhesive of the old film. The existing film and the new film will be pulled through the laminator together.

1. Preheat the laminator. Remove the feed tray.
2. Cut remaining top and bottom film webs between the supply rolls and main rollers.
3. Remove the safety shield.
4. Do not allow the adhesive side of the film to contact the heat or pull rollers. Liquefied or tacky adhesive deposited on heat rollers will require the rollers to be cleaned per the section entitled CARING FOR THE GBC SignMaker SERIES LAMINATOR.
5. Remove bottom film supply roll from laminator then lower the bottom film guide.
6. To load new film on film supply shafts repeat steps 9 and 10 in subsection Method Using Film Threading Card.
7. Unroll enough film from the bottom roll of film to slide under the bottom idler bar and tack to the existing film. Slide the bottom idler bar back into place and replace supply roll shaft.
8. Replace the top supply roll shaft and unroll enough film to tack to the existing top roll of film.
9. Install the feed table and safety shield.
10. Set the speed for the the slowest speed setting and press "**RUN**".
11. Observe the film being pulled through the laminator to assure that the remaining existing film and the new film are advancing concurrently. Any separation between the films will require stopping the motor immediately and the situation corrected.
12. Press "**STOP**" once the newly threaded film is completely exiting the laminator.

©2004 General Binding Corporation

Mounting

Tips For Threading Pressure Sensitive Film

1. Use kraft paper for one-sided lamination whenever the items to be laminated are narrower than the film you are using or you can not consistently feed the items without a gap.
2. Thread the film completely through the machine before you cut the release liner and connect it to the take up roller.

Pre Treating Mounting Boards

You may wish to pre coat mounting boards ahead of time with pressure sensitive mounting film.

1. Load the laminator as shown in Fig 19.
2. Adjust the Roller Pressure Handle to the proper mounting setting. No heat required.
3. Start a leader board into the rollers. Stop the motor before it clears the rollers. Butt the leading edge of the next board against the trailing edge of the leader board and press "**RUN**". Continue feeding one board after another keeping pressure on them to prevent gaps from forming.

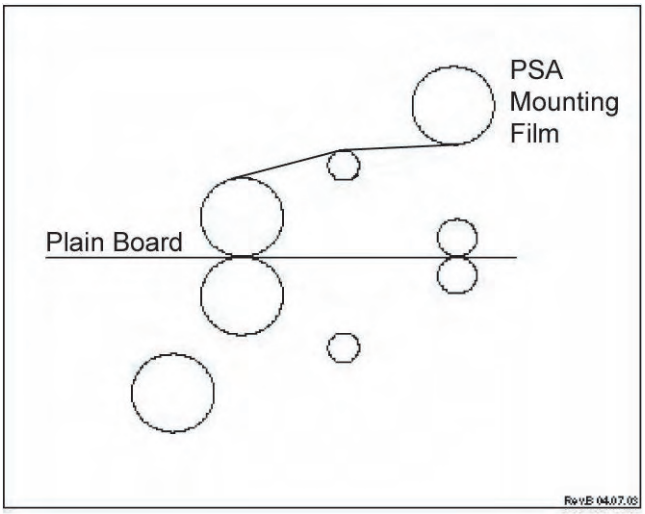

Fig. 19

©2004 General Binding Corporation

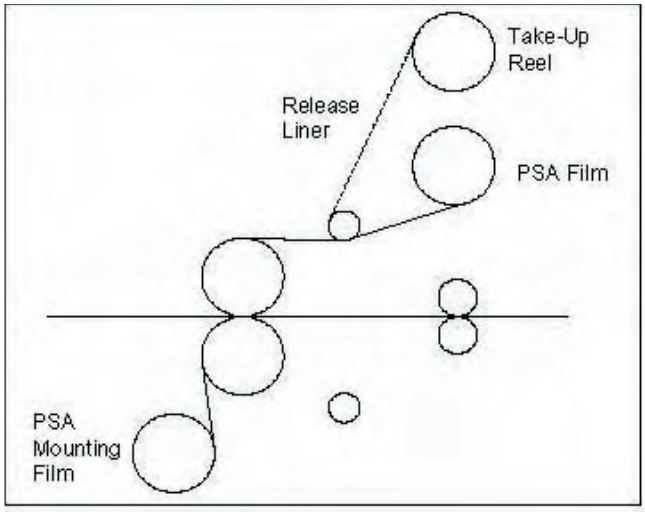

Fig. 21A

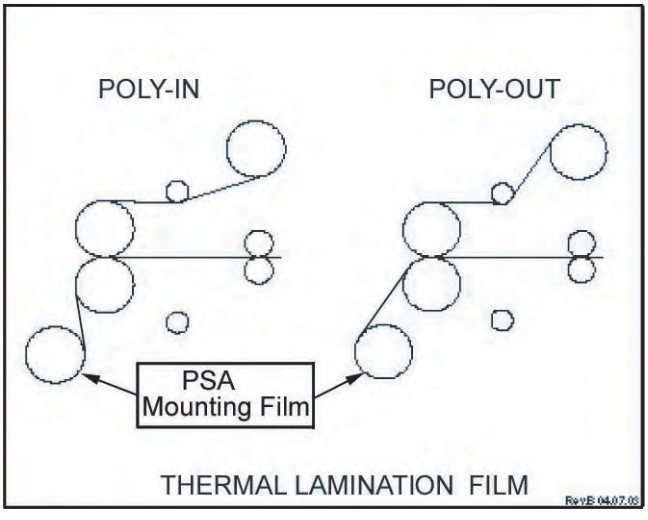

Fig. 21B

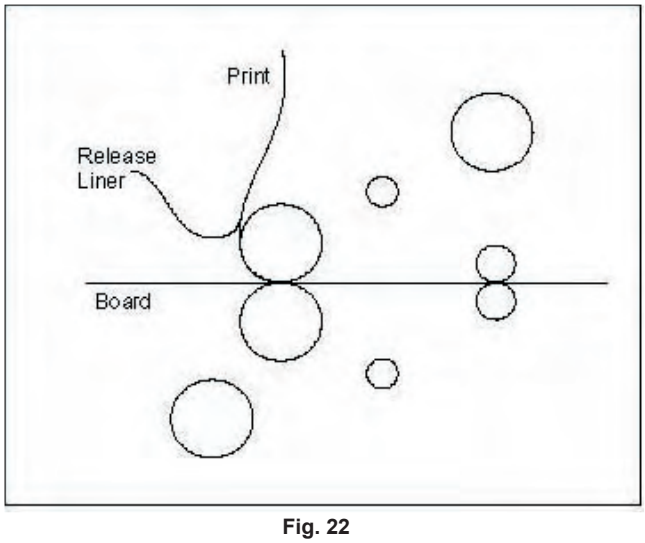

Fig. 22

Decaling; PSA or Thermal film - Two Passes

This two pass operation requires the use of pressure sensitive laminating film on the bottom supply shaft and ether pressure sensitive or thermal laminating film on the top supply shaft.

First Pass

1. Load the laminator as shown in Fig 21. **NOTE:** Thermal laminating film does not have a release liner. Also, whether you are using Poly-in or Poly-out film.
2. Adjust the Roller Pressure handle to the proper laminating setting.
3. Place the item to be laminated on the feed table, then press "**RUN**".
4. Guide the item into the heat rollers.
5. Once the item has cleared the back of the machine, press "**STOP**". Remove the web and trim out the encapsulated product.

Second Pass

Refer to Fig 22 for the second pass process. Unweb laminator first.

1. Adjust the roller pressure handle to the proper Mounting setting and set the motor speed to 3.
2. Peel back the leading edge of the release liner of the laminated item approximately 1 inch.
3. Place the item on the mount board. Tack the exposed adhesive edge of the item, from the center out, to the leading edge of the board.
4. Butt the leading edge of the board up against the heat rollers.
5. Drape the encapsulated item over the heat shield. Do not allow the print to flop backwards.
6. Press "**RUN**" and immediately grasp the release liner for separation as the board is pulled into the rollers. **Do not allow the release liner to be pull into the rollers.**
7. After the board has cleared the rollers press "**STOP**".

©2004 General Binding Corporation

Mounting Only

This process requires a PSA pre treated board only. Refer to **Overlamination and Mounting**, (Fig 23).

AccuShield™ Film

Figure 24 shows the webbing and typical configuration for AccuShield™ applications. Note that the separator bar is used for this application to insure that proper separation is achieved.

Running Foil

Please consult you local GBC sales representative or your dealer/distributor before attempting to run foil through the laminator

.

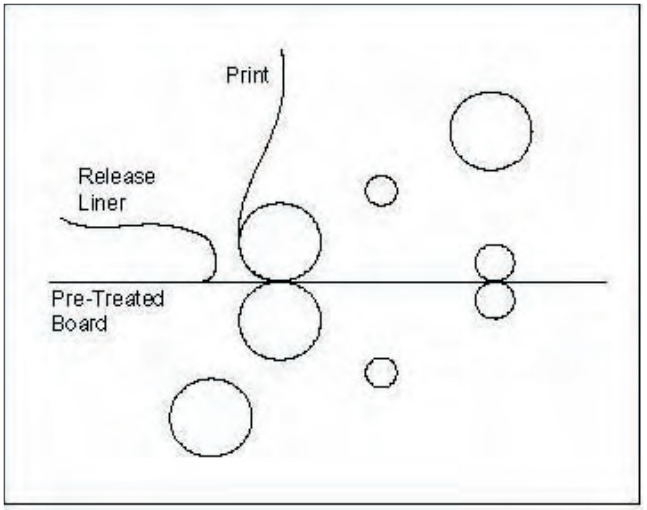

Fig. 23

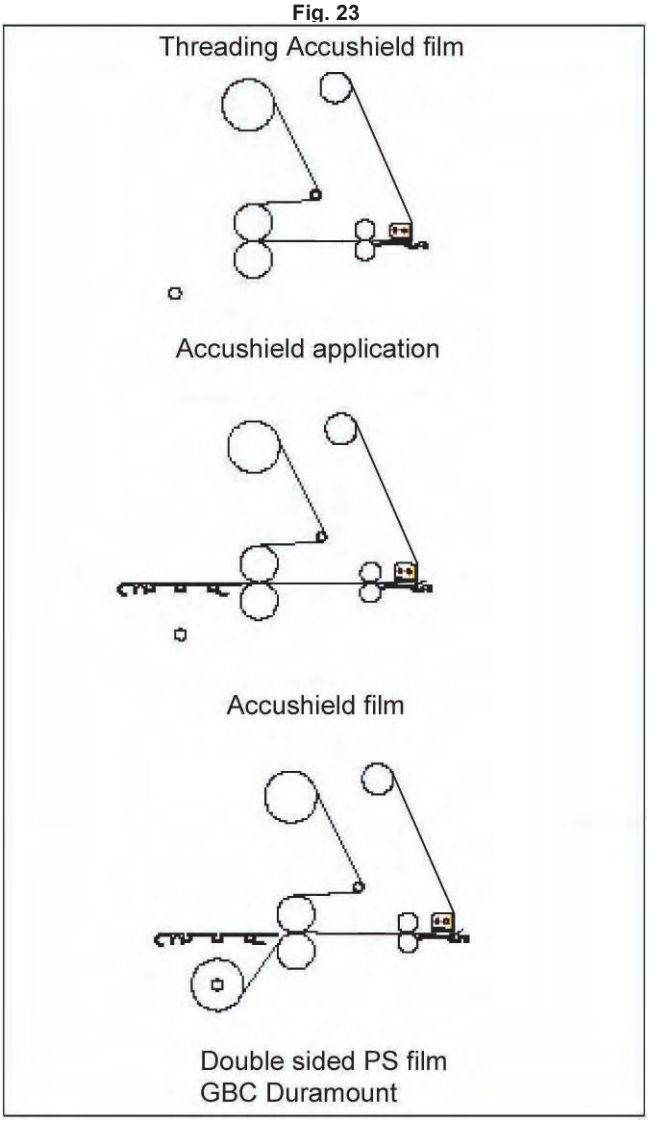

Fig. 24

©2004 General Binding Corporation

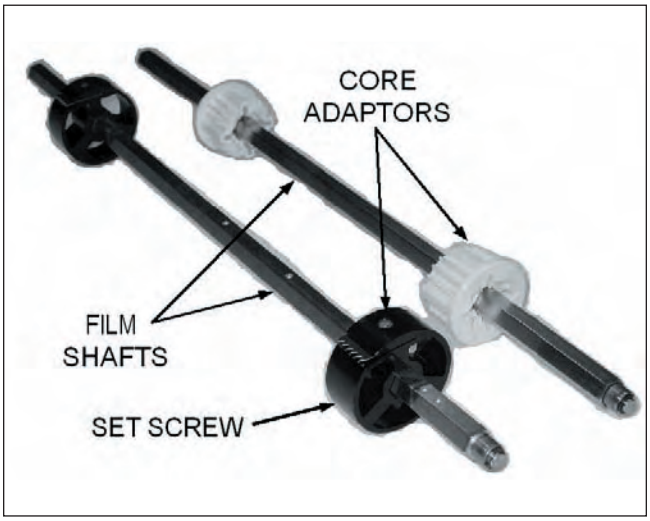

Fig. 25

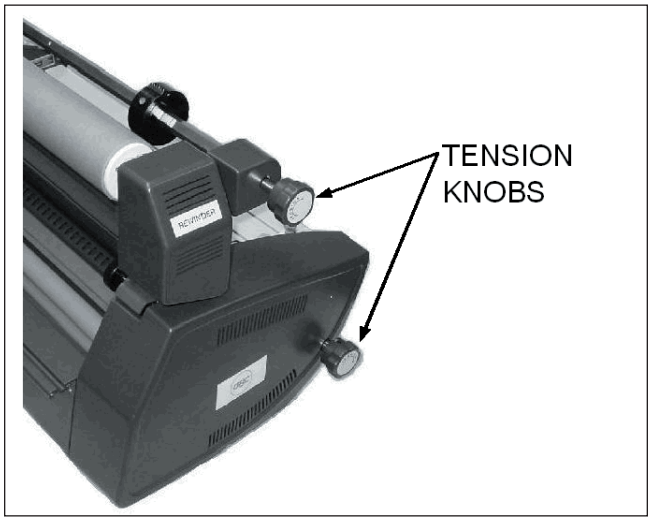

Fig. 26

Film Alignment

The film or supply shafts are shown in Fig 25. Loosen the locking screws to align the film.

Film Tension Adjustment

Proper film tension, known as brake tension, is the minimum amount required to eliminate wrinkles in the finished item. The film tension is set at the factory. Tension adjustments are not necessary if you are using 1.5 or 3 mil GBC film unless the lamination is curling up or down. Generally, 5 and 10 mil film require more tension; and, as the film roll becomes smaller, tension increases, requiring more adjustments. Film tension should be checked occasionally to assure that the adjustment is correct.

The film should be taut. A properly adjusted roll of film should not require excessive force to turn by hand. Film tension should be enough to introduce a minor amount of drag as the film unrolls. Insufficient tension causes wrinkles, while too much tension causes stretching (necking). Uneven tension between the top and bottom rolls create curl. Too much upper tension creates upward curl. Too much lower tension bottom causes downward curl.

1. The machine is equipped with external tension knobs located on the left side, (Fig 26). Turning the knobs clockwise increases the tension while counterclockwise decrease the tension.
2. Laminate some test samples to check for proper tension. Further adjust if necessary.

Clearing a Film Jam (Wrap-up)

Film jams (wrap-ups) may occur if the film is loaded backwards or if the area at which film exits the equipment is blocked. The film, when jammed, wraps around heat or pull rollers. To clear a jam it is necessary to rotate the rollers in the reverse direction. When pressed, the "**REVERSE**" button on the control panel will cause the rollers to reverse. To clear a jam:

1. Immediately stop the laminator by pressing "**STOP**".
2. Set the speed indicator to 2.
3. Remove the safety shield and feed tray.
4. Cut the top and bottom film webs.
5. Grasp the loose ends of the web, pull straight and install the feed tray so the web is on top of the tray. Replace the safety shield. Press and hold down the "**RUN**" and "**REVERSE**" buttons together; guide the film out of the heat rollers.
6. Once the jam has cleared the heat rollers, press the "**STOP**" button.
7. Thread the film per section FILM LOADING & THREADING.

©2004 General Binding Corporation

SPEED/TEMPERATURE GUIDE AND THE ART OF LAMINATION

Do not attempt to laminate abrasive or metal objects such as staples, paper clips and glitter, as they may damage the heat or pull rollers.

Do not force items into the nip area of the heat rollers. An item that is not easily drawn into the laminator by the heat rollers is probably too thick to laminate.

Wrinkles may result if an attempt is made to reposition an item once it has been grasped by the heat rollers.

Do not stop the laminator before an item has completely exited the pull rollers. Even a momentary stop will cause a mark (heat line) on the laminated item.

Good, consistent lamination is a result of combining proper heat, tension and dwell time. Dwell time is controlled by the speed of the motor and is defined as the amount of time the material to be laminated is compressed between the heat rollers.

As a general rule, thicker items and film need to run at slower speeds because they extract more heat from the rollers at a quicker rate. Setting the speed control at slower settings gives the laminator longer dwell time thus allowing proper lamination of thick items. Thinner items, such as standard copier paper (20 lb. bond) and tissue paper, extract less heat from the rollers and can be run at faster speeds.

Operation of the laminator for more than thirty minutes at a time may necessitate a lower speed setting. It is recommended that, during periods of long runs, the items being laminated are alternated between thick and thin. Do not combine thick and thin items at the same time, as this will result in a poor edge seal around the thinner material. If you are unsure that the laminator is set at the proper speed for the item to be laminated, run a test piece (scrap) of the same or similar material through the laminator. This procedure is recommended because rotating the heat roller prior to lamination will more evenly distribute the heat. Make speed adjustments if necessary.

©2004 General Binding Corporation

©2004 General Binding Corporation

7.0 Operator Maintenance

Caring For The GBC Signmaker Series Laminator

GBC offers Cleaning kits as well as Extended Maintenance Agreements. Contact your local GBC Service Representative or your dealer/distributor for additional information.

The only maintenance required by the operator is to periodically clean the main rollers. The following procedure will help keep the main rollers free of adhesive that has been deposited along the edge of the laminating film. Proper alignment of the rolls of film reduces the amount of “squeeze out”.

Do not attempt to laminate adhesives marked “Flammable”.

Do not laminate glitter and/or metallic items. Damage to the rollers may result.

Cleaning The Heat Rollers

CAUTION: THE FOLLOWING PROCEDURE IS PERFORMED WHILE THE LAMINATOR IS HOT. USE EXTREME CAUTION.

WARNING: Do not apply any cleaning fluids or solvents to the rollers. Some solvents and fluids could ignite on heated rollers.

- Never clean rollers with sharp or pointed objects.
- Hardened adhesive deposits on the rollers can cause damage to the rollers. Rotate the rollers at the lowest speed setting on the control panel.

1. Remove the film from the laminator following the procedure outlined in steps 1 through 7 of the section FILM LOADING AND THREADING, Method Using Film Treading Card.
2. Preheat the laminator until the "**READY**" LED illuminates.
3. Rub the top and bottom heat rollers with a 3M™ Scotch-Brite™ pad. DO NOT USE METAL SCOURING PADS!
4. Install the feed table and safety shield.
5. Press "**RUN**" to rotate the heat rollers to an unclean portion. Press "**STOP**". Continue this process until the complete surface of both rollers are clean.
6. Follow the procedure in section FILM LOADING AND THREADING, Method Using Film Threading Card to reload the laminator.

***NOTE:** Do not use metal scouring pads to clean the rollers.

©2004 General Binding Corporation

Trouble Shooting Guide

SYMPTOM	POSSIBLE CAUSE	CORRECTIVE ACTION
• "**POWER**" lamp does not illuminate when "**ON/OFF**" switch is in the "**ON**" position.	Laminator not connected to electrical supply.	Insert attachment plug into receptacle.
• Heat rollers do not turn.	Circuit breaker open. Safety shield in upright position. Feed tray interlock pin not in place.	Reset circuit breaker. Lower safety shield. Slide interlock lever all the way into the left side frame.
• Laminated items exhibit curling.	Tension between the top and bottom film roll is unequal. Tension on top or bottom roll of film is too loose. Speed setting too slow. Bottom film roll may be improperly loaded	Adjust tension per section FILM TENSION ADJUSTMENT. Adjust tension per section FILM TENSION ADJUSTMENT. Slightly speed up laminator. Make sure bottom roll of film is around idler bar.
• Adhesive deposited on heat rollers.	Top and bottom film webs not aligned. Laminate improperly loaded.	Align film webs per section FILM ALIGNMENT PROCEDURE. Adhesive (matte) side of laminate film may be against the heat rollers. Load film per procedure outlined in section FILM LOADED & THREADING.
• Unsatisfactory adhesion of laminate.	Speed setting too fast for type of material being laminated. Insufficient heat. Laminate improperly loaded. Heat rollers require cleaning. Laminated item unsuitable for adhesion.	Lower speed setting by pressing SLOW button to slower speed "**READY**" LED lamp must be illuminated. Adhesive side of film must be facing away from the heat rollers. Bottom roll of film not threaded behind the idle bar. Clean heat rollers per procedure in section CARING FOR THE GBC SignMaker SERIES LAMINATOR. Item may be dirty or may have non-porous surface that is extremely difficult to laminate.

©2004 General Binding Corporation

General Binding Corporation
One GBC Plaza
Northbrook, IL 60062-4195