OPERATOR'S MANUAL

MODEL #100574
3500W DIGITAL HYBRID INVERTER GENERATOR

REGISTER YOUR PRODUCT ONLINE

at **championpowerequipment.com**

TAKE IT OUTSIDE™
TAKEYOURGENERATOROUTSIDE.COM

1·877·338·0999

or visit **championpowerequipment.com**

SAVE THESE INSTRUCTIONS. This manual contains important safety precautions which should be read and understood before operating the product. Failure to do so could result in serious injury. This manual should remain with the product.

Specifications, descriptions and illustrations in this manual are as accurate as known at the time of publication, but are subject to change without notice.

This product meets the requirements of the PGMA (Portable Generator Manufacturers' Association) standard ANSI/PGMA G300-2015 (Safety and Performance of Portable Generators).

Covered by one or more of the following U.S. Patent Numbers: 10,598,101, 10,221,780 and other U.S. and foreign patents pending.

Made in China - REV 20200528

Champion Power Equipment, Inc., Santa Fe Springs, CA USA

TABLE OF CONTENTS

Introduction **3**

Safety Definitions **3**

Important Safety Instructions **4**

Fuel Safety 6
Safety and Dataplate Labels 7
Safety Symbols 8
Operation Symbols 9
Quickstart Label Symbols 10

Controls and Features **11**

Generator 11
Control Panel 12
Parts Included 13

Assembly **14**

Unpacking 14
Add Engine Oil 14
Add Fuel: Gasoline 15
Add Fuel: Propane (LPG) 15
Grounding 16

Operation **17**

Generator Location 17
Surge Protection 17
Fuel Selector Switch 17
Starting the Engine: Gasoline 18
Starting the Engine: Propane (LPG) 19
Connecting Electrical Loads 20
Do Not Overload Generator 20
Eco (Economy) Mode 21
12V DC Automotive Style Outlet 21
Parallel Operation 22
Stopping the Engine 22
Moving the Generator 22
Operation at High Altitude 22

Maintenance **23**

Cleaning the Generator 23
Changing the Engine Oil 23
Cleaning and Adjusting the Spark Plug 23
Cleaning the Air Filter 24
Cleaning the Spark Arrestor 24
Adjusting the Governor 24
Maintenance Schedule 24

Storage **25**

Short Term Storage (up to 30 days) 25
Mid Term Storage (30 days – 1 year) 25
Long Term Storage (over 1 year) 26
Removing from Storage 26

Specifications **27**

Generator Specifications 27
Engine Specifications 27
Oil Specifications 27
Fuel Specifications 27
Temperature Specifications 27
Parts Diagram 28
Parts List 29
Engine Parts Diagram 31
Engine Parts List 32
Wiring Diagram 34

Troubleshooting **35**

Warranty* **36**

Warranty Qualifications 36
Repair/Replacement Warranty 36
Do Not Return The Unit To The Place Of Purchase 36
Warranty Exclusions 36
Other Exclusions 36
Limits of Implied Warranty and Consequential Damage 36
Contact Information 36

INTRODUCTION

Congratulations on your purchase of a Champion Power Equipment (CPE) product. CPE designs, builds, and supports all of our products to strict specifications and guidelines. With proper product knowledge, safe use, and regular maintenance, this product should bring years of satisfying service.

Every effort has been made to ensure the accuracy and completeness of the information in this manual at the time of publication, and we reserve the right to change, alter and/or improve the product and this document at any time without prior notice.

CPE highly values how our products are designed, manufactured, operated, and serviced as well as providing safety to the operator and those around the generator. Therefore, it is IMPORTANT to review this product manual and other product materials thoroughly and be fully aware and knowledgeable of the assembly, operation, dangers and maintenance of the product before use. Fully familiarize yourself, and make sure others who plan on operating the product fully familiarize themselves too, with the proper safety and operation procedures before each use. Please always exercise common sense and always err on the side of caution when operating the product to ensure no accident, property damage, or injury occurs. We want you to continue to use and be satisfied with your CPE product for years to come.

When contacting CPE about parts and/or service, you will need to supply the complete model and serial numbers of your product. Transcribe the information found on your product's nameplate label to the table below

CPE TECHNICAL SUPPORT TEAM
1-877-338-0999
MODEL NUMBER
100574
SERIAL NUMBER
DATE OF PURCHASE
PURCHASE LOCATION

SAFETY DEFINITIONS

The purpose of safety symbols is to attract your attention to possible dangers. The safety symbols, and their explanations, deserve your careful attention and understanding. The safety warnings do not by themselves eliminate any danger. The instructions or warnings they give are not substitutes for proper accident prevention measures.

⚠ DANGER

DANGER indicates a hazardous situation which, if not avoided, will result in death or serious injury.

⚠ WARNING

WARNING indicates a hazardous situation which, if not avoided, could result in death or serious injury.

⚠ CAUTION

CAUTION indicates a hazardous situation which, if not avoided, could result in minor or moderate injury.

NOTICE

NOTICE indicates information considered important, but not hazard-related (e.g., messages relating to property damage).

IMPORTANT SAFETY INSTRUCTIONS

⚠ WARNING

Cancer and Reproductive Harm – www.P65Warnings.ca.gov

⚠ DANGER

Generator exhaust contains carbon monoxide, a colorless, odorless, poisonous gas. Breathing carbon monoxide will cause nausea, dizziness, fainting or death. If you start to feel dizzy or weak, get to fresh air immediately.

OPERATE GENERATOR OUTDOORS ONLY IN A WELL VENTILATED AREA AND POINT EXHAUST AWAY.

DO NOT operate the generator inside any building, including garages, basements, crawlspaces and sheds, enclosure or compartment, including the generator compartment of a recreational vehicle.

DO NOT allow exhaust fumes to enter a confined area through windows, doors, vents or other openings.

⚠ DANGER

Using a generator indoors **CAN KILL YOU IN MINUTES**. Generator exhaust contains carbon monoxide. This is a poison you cannot see or smell.

NEVER use inside a home or garage, **EVEN IF** doors and windows are open.

ONLY use **OUTSIDE** and far away from windows, doors, and vents.

Install battery-operated carbon monoxide alarms or plug-in carbon monoxide alarms with battery back-up according to the manufacturer's instructions.

⚠ WARNING

Although the generator contains a spark arrester, maintain a minimum distance of 5 ft. (1.5 m) from dry vegetation to prevent fires.

⚠ DANGER

Operate equipment with guards in place.

Rotating parts can entangle hands, feet, hair, clothing and/or accessories. Traumatic amputation or severe laceration can result.

Keep hands and feet away from rotating parts.

Tie up long hair and remove jewelry.

DO NOT wear loose-fitting clothing, dangling drawstrings or items that could become caught.

⚠ DANGER

Generator produces powerful voltage.

DO NOT touch bare wires or receptacles.

DO NOT use electrical cords that are worn, damaged or frayed. Use only Champion electrical cords for proper application.

DO NOT operate generator in wet weather.

DO NOT allow children or unqualified persons to operate or service the generator.

Use a ground fault circuit interrupter (GFCI) in damp areas and areas containing conductive material such as metal decking.

Connection to your home's electrical system requires a listed 30A transfer switch installed by a licensed electrician and approved by the local authority having jurisdiction. The connection must isolate the generator from the utility power and must comply with all applicable laws and electrical codes.

⚠ WARNING

Do not use generator for medical and life support uses.

In case of emergency, call 911 immediately.

NEVER use this product to power life support devices or life support appliances.

NEVER use this product to power medical devices or medical appliances.

Inform your electricity provider immediately if you or anyone in your household depends on electrical equipment to live.

Inform your electrical provider immediately if a loss of power would cause you or anyone in your household to experience a medical emergency.

⚠ WARNING

Spark from removed spark plug wire can result in fire or electrical shock.

When servicing the generator:

Disconnect the spark plug wire and place it where it cannot contact the plug or any other metal object.

DO NOT check for spark with the plug removed.

Use only approved spark plug testers.

⚠ WARNING

Running engines produce heat. Severe burns can occur on contact. Combustible material can catch fire on contact.

DO NOT touch hot surfaces.

Avoid contact with hot exhaust gases.

Allow equipment to cool before touching.

Maintain at least 3 ft. (91.4 cm) of clearance on all sides to ensure adequate cooling.

Maintain at least 5 ft. (1.5 m) of clearance from combustible materials.

⚠ WARNING

Rapid retraction of the recoil cord will pull hand and arm towards the engine faster than you can let go. Unintentional startup can result in entanglement, traumatic amputation or laceration. Broken bones, fractures, bruises or sprains could result.

When starting engine, pull the recoil cord slowly until resistance is felt and then pull rapidly to avoid kickback.

DO NOT start or stop the engine with electrical devices plugged in and turned on.

⚠ CAUTION

Exceeding the generator's running capacity can damage the generator and/or electrical devices connected to it.

DO NOT overload the generator.

DO NOT tamper with the governed speed.

DO NOT modify the generator in any way.

⚠ CAUTION

Start the generator and allow the engine to stabilize before connecting electrical loads.

Connect electrical equipment in the off position, and then turn them on for operation.

Turn electrical equipment off and disconnect before stopping the generator.

⚠ CAUTION

Improper treatment or use of the generator can damage it, shorten its life or void the warranty.

Use the generator only for intended uses.

Operate only on level surfaces.

DO NOT expose generator to excessive moisture, dust, or dirt.

DO NOT allow any material to block the cooling slots.

If connected devices overheat, turn them off and disconnect them from the generator.

DO NOT use the generator if:

- Electrical output is lost
- Equipment sparks, smokes or emits flames
- Equipment vibrates excessively

Fuel Safety

⚠ DANGER

GASOLINE, GASOLINE VAPORS AND PROPANE (LPG) ARE HIGHLY FLAMMABLE AND EXPLOSIVE.

Fire or explosion can cause severe burns or death.

Gasoline and gasoline vapors:

- Gasoline is highly flammable and explosive.
- Gasoline can cause a fire or explosion if ignited.
- Gasoline is a liquid fuel but it's vapors can ignite.
- Gasoline is a skin irritant and needs to be cleaned up immediately if spilled on skin or clothes.
- Gasoline has a distinctive odor, this will help detect potential leaks quickly.
- In any petroleum gas fire, flames should not be extinguished unless by doing so the fuel supply valve can be turned OFF. This is because if a fire is extinguished and a supply of fuel is not turned OFF, then an explosion hazard could be created.
- Gasoline expands or contracts with ambient temperatures. Never fill the gasoline tank to full capacity, as gasoline needs room to expand if temperatures rise.

LPG:

- LPG is highly flammable and explosive.
- LPG is under pressure and can cause a fire or explosion if ignited.
- LPG is heavier than air and can settle in low places while dissipating.
- LPG has a distinctive odor added to help detect potential leaks quickly.
- In any petroleum gas fire, flames should not be extinguished unless the fuel supply valve is turned OFF. This is because if a fire is extinguished and a supply of fuel is not turned OFF, then an explosion hazard could be created.
- When exchanging LPG cylinders, be sure the cylinder valve is of the same type.
- Always keep the LPG cylinder in an upright position.
- LPG will burn skin if it comes in contact with it. Keep any and all LPG away from skin at all times.

When adding or removing gasoline:

DO NOT light or smoke cigarettes.

Turn the generator off and let it cool for at least two minutes before removing the gasoline cap. Loosen the cap slowly to relieve pressure in the tank.

Only fill or drain gasoline outdoors in a well-ventilated area.

DO NOT pump gasoline directly into the generator at the gas station. Use an approved container to transfer the fuel to the generator.

DO NOT overfill the gasoline tank.

Always keep gasoline away from sparks, open flames, pilot lights, heat and other sources of ignition.

When starting the generator:

DO NOT attempt to start a damaged generator.

Make certain that the gasoline cap, air filter, spark plug, fuel lines and exhaust system are properly in place.

Allow spilled gasoline to evaporate fully before attempting to start the engine.

Make certain that the generator is resting firmly on level ground.

When operating the generator:

DO NOT move or tip the generator during operation.

DO NOT tip the generator or allow fuel or oil to spill.

When transporting or servicing the generator:

Make certain that the fuel valve is in the OFF position and the gasoline tank is empty.

For LPG compatible models, be sure that the LPG cylinder is disconnected and stored securely away from the generator.

Disconnect the spark plug wire.

When storing the generator:

Store away from sparks, open flames, pilot lights, heat and other sources of ignition.

Do not store generator, gasoline or LPG cylinders near furnaces, water heaters, or any other appliances that produce heat or have automatic ignitions.

⚠ WARNING

Never use a gasoline container, gasoline tank, LPG connector hose, LPG cylinder or any other fuel item that is broken, cut, torn or damaged.

Safety and Dataplate Labels

These labels warn you of potential hazards that can cause serious injury. Read them carefully.

If a label comes off or becomes hard to read, contact Technical Support Team for possible replacement.

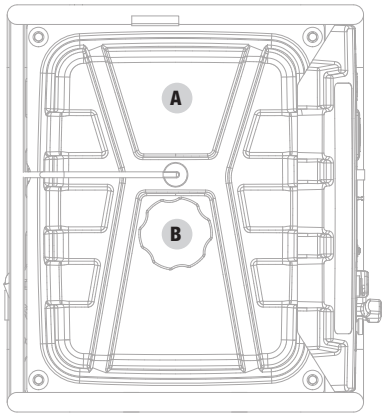

Top

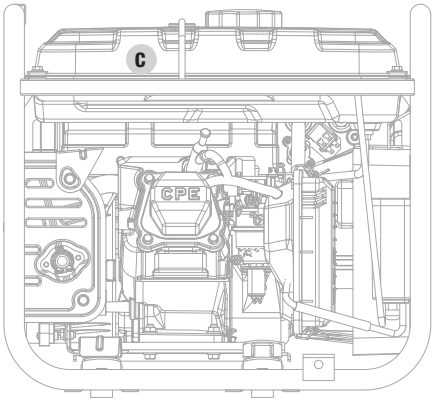

Back

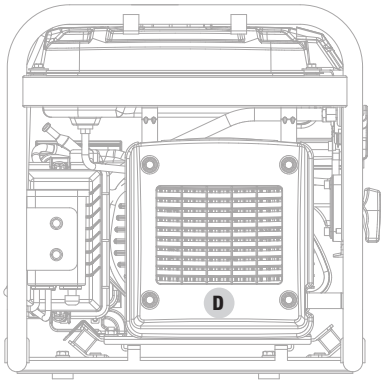

Side

	LABEL	DESCRIPTION
A		CO Danger
B		Fuel
C		Hot Surface
D	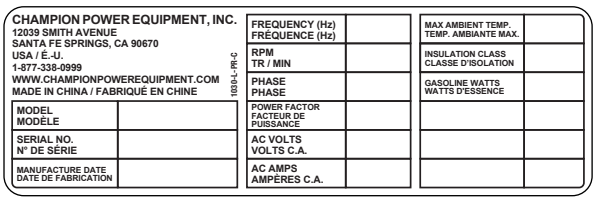	Dataplate

Safety Symbols

Some of the following symbols may be used on this product. Please study them and learn their meaning. Proper interpretation of these symbols will allow you to more safely operate the product.

SYMBOL	MEANING
	Read Operator's Manual. To reduce the risk of injury, user must read and understand operator's manual before using this product.
	Clearance. Keep all objects at least 5 feet (1.5m) from generator. Heat from the muffler and exhaust gas can ignite combustible objects.
	Ground. Consult with local electrician to determine grounding requirements before operation.
	Electric Shock. Failure to use in dry conditions and to observe safe practices can result in electric shock. Improper connections to a building can allow current to backfeed into utility lines, creating an electrocution hazard. A transfer switch must be used when connecting to a building.
	Fire/Explosion. Fuel and its vapors are extremely flammable and explosive. Fire or explosion can cause severe burns or death. Keep generator at least 5 feet (1.5m) from all objects to prevent combustion.
	Hot Surface. To reduce the risk of injury or damage, avoid contact with any hot surface.
	Open Flame Alert. Fuel and its vapors are extremely flammable and explosive. Keep fuel away from smoking, open flames, sparks, pilot lights, heat, and other ignition sources.
	Wet Conditions Alert. Do not expose to rain or use in damp locations.

Operation Symbols

Some of the following symbols may be used on this product. Please study them and learn their meaning. Proper interpretation of these symbols will allow you to more safely operate the product.

SYMBOL	MEANING
	ON
	STOP or OFF
	Gasoline Valve ON
	Propane Valve ON
	Choke Knob
	Choke. Pull choke knob to “CHOKE” position.
	Run. Push choke knob to “RUN” position.
ECO	**Economy Mode Switch**
	RV Ready Receptacle

SYMBOL	MEANING
	Ground Terminal
12 V	**12V Direct Current**
	Parallel Connection(s)
OK	**Output OK**
	Overload
	Low Oil
N	**Neutral Floating.** Neutral circuit **IS NOT** electrically connected to the frame/ ground of the generator.

Quickstart Label Symbols

Some of the following symbols may be used on this product. Please study them and learn their meaning. Proper interpretation of these symbols will allow you to more safely operate the product.

Starting the Engine

⚠ DANGER

Move generator outside and far away from windows, doors and intake ventilation covers.

1. **Check oil level.**
   Recommended oil is 10W-30.
2. **Add fuel.**
   2a. **If operating on gasoline, check gasoline level.** When adding gasoline, use a minimum octane rating of 87 and an ethanol content of 10% or less by volume.
   2b. **If operating on propane, connect propane tank.** Open valve on propane tank.
3. **Fuel selector.**
   3a. Turn the fuel selector to the vertical position for **gasoline** operation.
   3b. Turn the fuel selector to the horizontal position for **LPG** operation.
4. Press engine switch to the **"ON"** position.
5. Pull choke knob to **"CHOKE"** position.
6. Pull the recoil cord.
7. Push the choke knob to **"RUN"** position.
8. Plug in desired device.

Stopping the Engine

1. Turn off and unplug all connected electrical loads.
2. Press the engine switch to the **"OFF"** position.
3. **Turn fuel off.**
   3a. **If operating on gasoline,** turn the fuel selector to the horizontal position.
   3b. **If operating on propane,** close valve on propane tank.

CONTROLS AND FEATURES

Read this operator's manual before operating your generator. Familiarize yourself with the location and function of the controls and features. Save this manual for future reference.

Generator

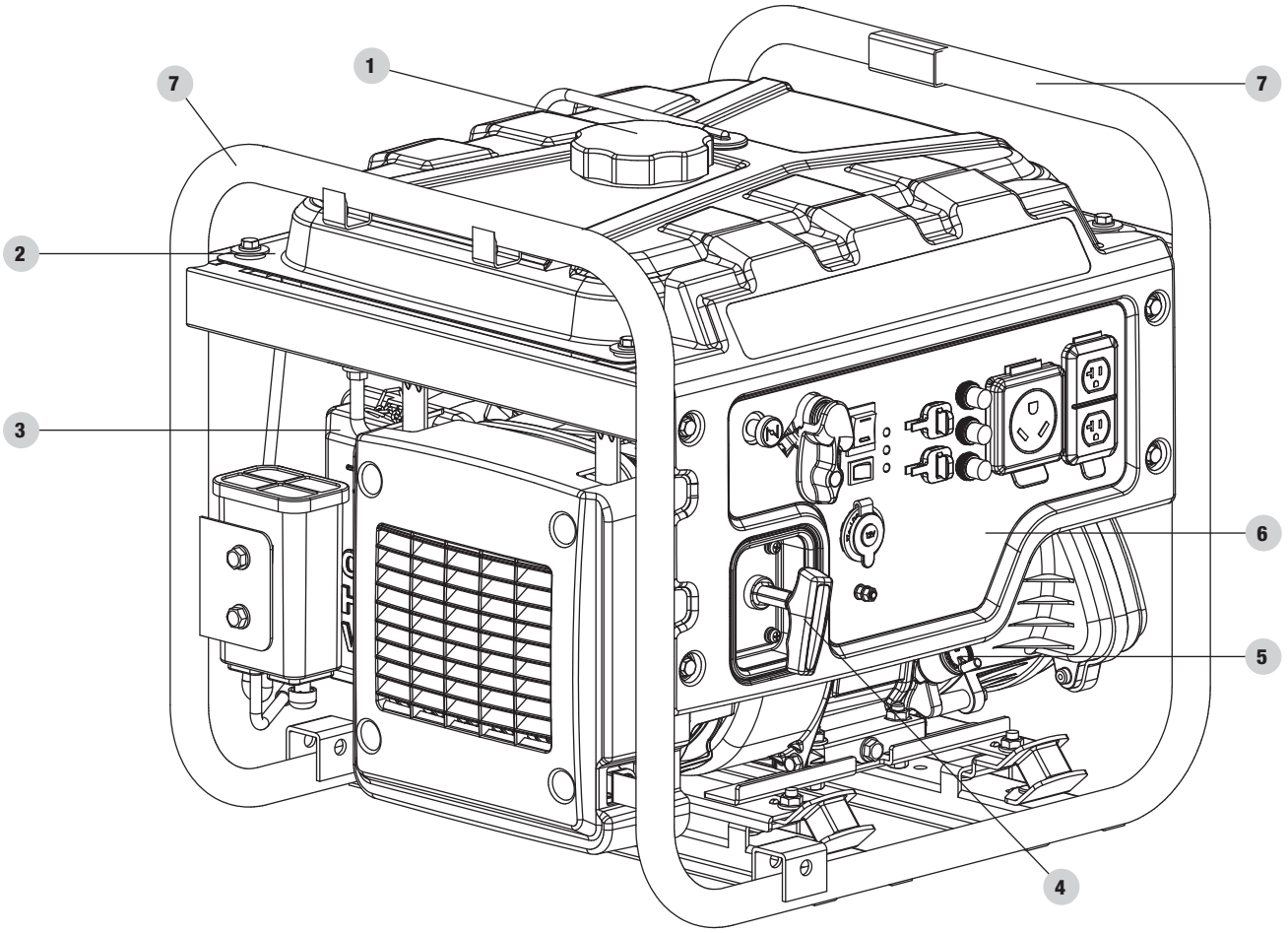

1. **Fuel Cap** – Remove to add fuel.
2. **Gasoline Tank** – 2.9 gal. (11 L)
3. **Air Filter** – Protects the engine by filtering dust and debris from the intake air.
4. **Recoil Starter** – Used to manually start the engine.
5. **Oil Fill Cap/Dipstick** – Used to check and fill oil level.
6. **Control Panel** – See "Control Panel" section.
7. **Carrying Handle(s)** – Used to lift or carry the unit.

Control Panel

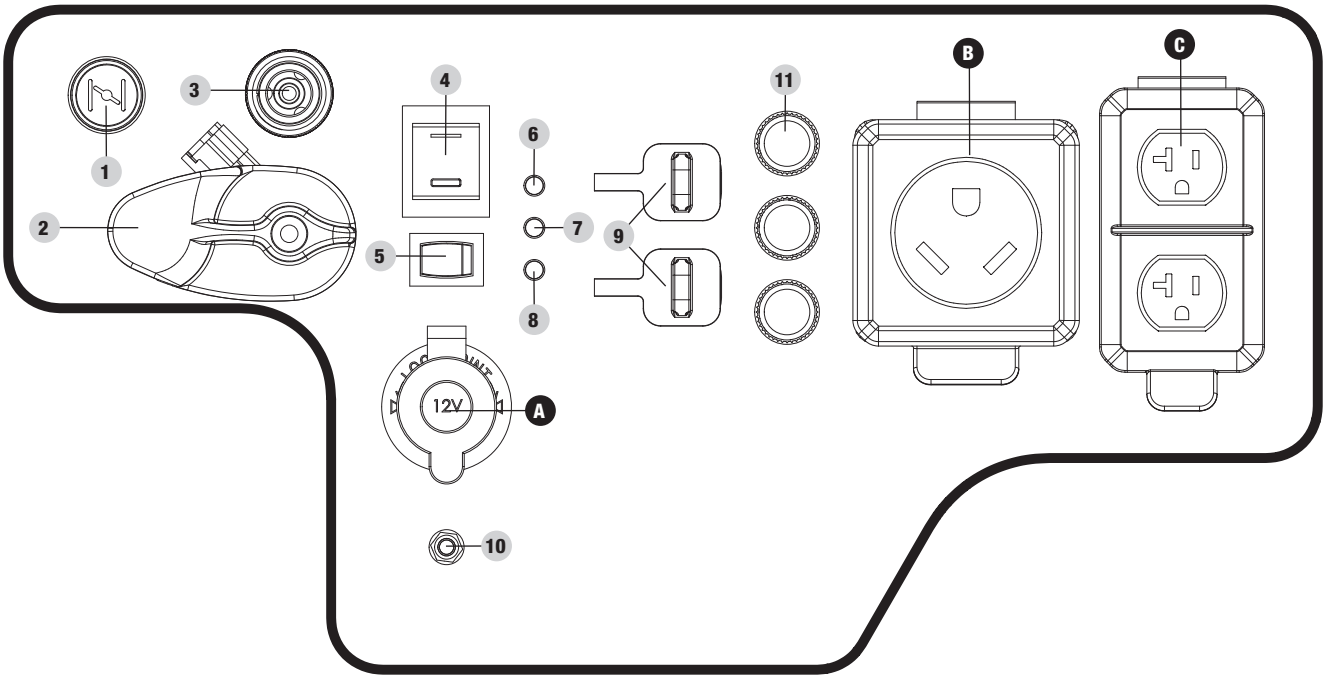

1. **Choke** – Used to start a cold engine.
2. **Fuel Selector Switch** – Used to select and turn on gasoline or propane (LPG) fuel source.
3. **LPG Inlet** – Used to connect LPG fuel source to generator.
4. **Engine Switch** – Used to put in START mode or STOP the generator. When operating by propane, this switch will NOT stop the engine.
5. **Economy Mode Switch** – Enables/disables automatic idle control.
6. **Output Indicator Light** – Remains ON during normal operating conditions. Turns OFF when generator is overloaded.
7. **Overload Indicator Light** – When ON generator is overloaded and power to receptacles is cut.
8. **Oil Warning Indicator Light** – When ON engine will shut down and not run. Check oil level.
9. **Parallel Outlets** – Used for parallel operation (parallel kit sold separately).
10. **Ground Terminal** – Consult an electrician for local grounding regulations.
11. **Circuit Breakers (Push Reset)** – Protects the generator against electrical overloads.

RECEPTACLES		
A	DC	**12V DC, 8 Amp (Automotive)** May be used to supply electrical power for operation of 12 Volt DC, 8 Amp electrical loads.
B		**120V AC, 30A RV (NEMA TT-30R)** May be used to supply electrical power for operation of 120 Volt AC, 30 Amp, single phase, 60 Hz electrical loads.
C		**(2×) 120V AC, 20A (NEMA 5-20R)** May be used to supply electrical power for operation of 120 Volt AC, 20 Amp, single phase, 60 Hz electrical loads.

Parts Included

Accessories

Oil Funnel 1
Dual 2.4A Port USB Adapter 1
Battery Charging Cables 1
2.3 ft. (0.7 m) LPG Hose with Regulator 1

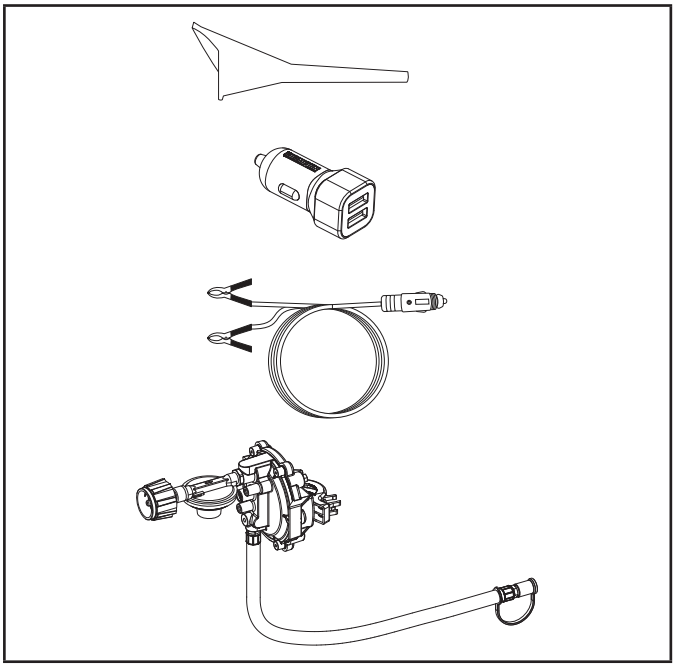

ASSEMBLY

Your generator requires some assembly. This unit ships from our factory without oil. It must be properly serviced with fuel and oil before operation.

If you have any questions regarding the assembly of your generator, call our Technical Support Team at 1-877-338-0999. Please have your serial number and model number available.

Unpacking

1. Set the shipping carton on a solid, flat surface.
2. Remove everything from the carton except the generator.
3. Using the carrying handles of the unit, carefully remove the generator from the box (two people lifting is recommended).

Add Engine Oil

⚠ CAUTION

DO NOT attempt to crank or start the engine before it has been properly filled with the recommended type and amount of oil. Damage to the generator as a result of failing to follow these instructions will void your warranty.

NOTICE

The generator rotor has a sealed, pre-lubricated ball bearing that requires no additional lubrication for the life of the bearing.

NOTICE

The recommended oil type for typical use is **10W-30 automotive oil**.

If running generator in extreme temperatures, refer to the following chart for recommended oil type.

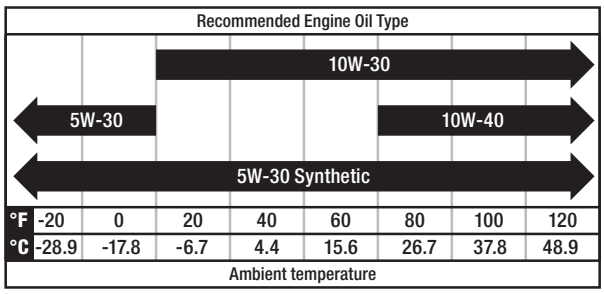

1. Place the generator on a flat, level surface.
2. Remove oil fill cap/dipstick to add oil.
3. Using a funnel, add up to 20.3 fl. oz. (0.6 qt.) of oil (not included) and replace oil fill cap/dipstick.
   DO NOT OVERFILL.

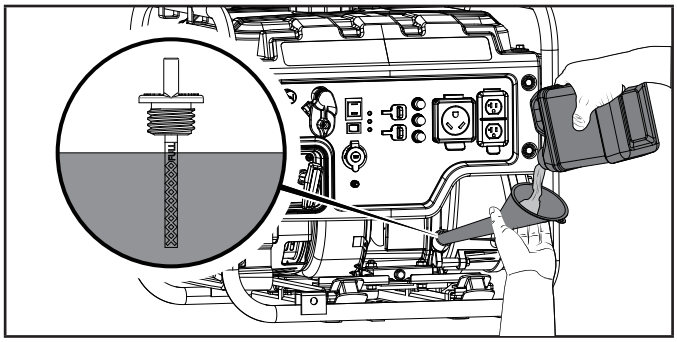

4. Check engine oil level at every use and add as needed.

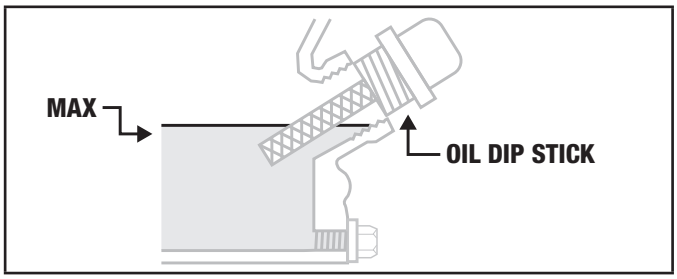

NOTICE

Once oil has been added, a visual check should show oil about 1-2 threads from running out of the fill hole.

When using the dipstick to check oil level, DO NOT screw in the dipstick while checking.

NOTICE

Check oil level often during the break-in period. Refer to the Maintenance section for recommended service intervals.

⚠ CAUTION

This engine is equipped with a low oil shut-off and will stop when the oil level in the crankcase falls below the threshold level.

NOTICE

The first 5 hours of run time are the break-in period for the unit. During the break in period stay at or below 50% of the running watt rating and vary the load occasionally to allow stator windings to heat and cool. Adjusting the load will also cause engine speed to vary slightly and help seat piston rings. After the 5 hour break-in period, change the oil.

NOTICE

Synthetic oil may be used after the 5 hour initial break-in period. Using synthetic oil does not increase the recommended oil change interval. Full synthetic 5W-30 oil will aid in starting in cold ambient < 41° F (5° C) temperatures.

Add Fuel: Gasoline

Use clean, fresh, regular unleaded gasoline with a minimum octane rating of 87 and an ethanol content of 10% or less by volume. E10 E15 E85

DO NOT mix oil with gasoline.

1. Remove the gasoline cap.
2. Slowly add gasoline to the tank. Tank is full when gasoline reaches red circle on screen. DO NOT OVERFILL. Gasoline can expand after filling. A minimum of ¼ in. (6.4 mm) of space left in the tank is required for gasoline expansion, although more than ¼ in. (6.4 mm) is recommended. Gasoline can be forced out of the tank as a result of expansion if overfilled, and can affect the stable running condition of the generator. The approximate fuel level is shown on the fuel gauge on top of the fuel tank.

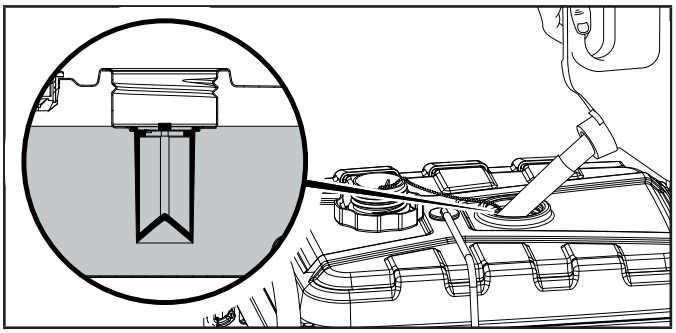

3. Screw on the gasoline cap and wipe away any spilled fuel.

⚠ CAUTION

Use unleaded gasoline with a minimum octane rating of 87 and an ethanol content of 10% or less by volume.

DO NOT light cigarettes or smoke when filling the tank.

DO NOT mix oil and gasoline.

DO NOT overfill the tank. Fill tank to approximately ¼ in. (6.4 mm) below the top of the tank to allow for gasoline expansion.

DO NOT pump gasoline directly into the generator at the pump. Use an approved container to transfer the gasoline to the generator.

DO NOT fill tank indoors.

DO NOT fill tank when the engine is running or hot.

⚠ WARNING

Pouring gasoline too fast through the fuel screen may result in gasoline splashing over the generator and operator while filling.

NOTICE

The generator engine works well with 10% or less ethanol blend gasoline. When using ethanol-gasoline blends there are some issues worth noting:

- Ethanol-gasoline blends can absorb more water than gasoline alone.
- These blends can eventually separate, leaving water or a watery goo in the tank, fuel valve and carburetor. The compromised gasoline can be drawn into the carburetor and cause damage to the engine and/or potential hazards.
- If a fuel stabilizer is used, confirm that it is formulated to work with ethanol-gasoline blends.
- Any damages or hazards caused by using improper gasoline, improperly stored gasoline, and/or improperly formulated stabilizers, are not covered by manufacturer's warranty.

It is advisable to always shut off the gasoline supply and run the engine to starvation after each use. See Storage instructions for extended non-use.

Add Fuel: Propane (LPG)

Connecting an LPG cylinder

1. Make sure the fuel selector switch on the inverter is in the 9 o'clock (horizontal) position.

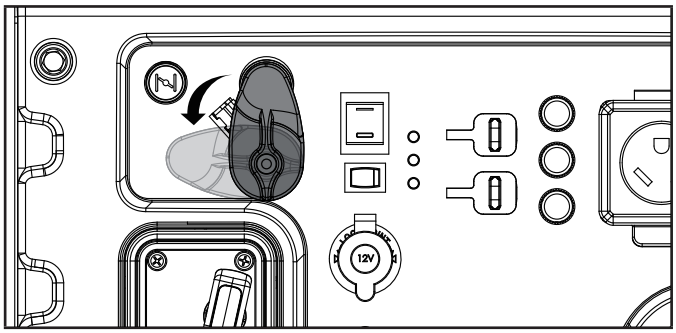

2. Insert the hose fitting into the quick connect coupling and push in until you hear a "click" and the outside collar of the quick connect coupling moves forward.

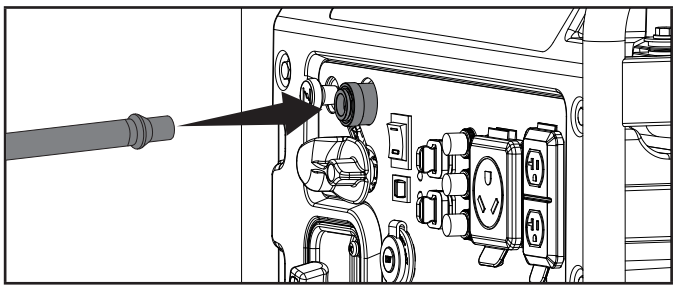

3. Remove the safety plug or cap from the cylinder valve.
4. Attach the other end of the hose to the LPG cylinder and hand tighten.
5. Check all connections for leaks by wetting the fittings with a solution of soap and water. Bubbles which appear or bubbles which grow indicate that a leak exists. If a leak exists at a fitting then turn off the gas valve at the tank and tighten the fitting. Turn the gas back on and recheck the fitting with the soap and water solution. If the leak continues or if the leak is not at a fitting then do not use the generator and contact customer service.

NOTICE

- The LPG hose included with this unit works with standard 20, 30, and 40 pound LPG tanks.
- Verify the re-qualification date on the cylinder has not expired.
- All new cylinders must be purged of air and moisture prior to filling. Used cylinders that have not been plugged or kept closed must also be purged.
- The purging process should be done by an LPG supplier (cylinders from an exchange supplier should have been purged and filled properly already).
- Always position the cylinder so the connection between the cylinder valve and generator inlet won't cause sharp bends or kinks in the LPG hose.

CAUTION

Do not allow children to tamper or play with the LPG cylinder or hose connections.

CAUTION

Use approved LPG cylinders equipped with an OPD (overfilling prevention device) valve. Always keep the cylinder in a vertical position with the valve on top and installed at ground level on a flat surface. Cylinders must not be installed near any heat source and should not be exposed to sun, rain, and dust. When transporting and storing, turn off the cylinder valve and generator LPG valve, and disconnect the cylinder. Plug the outlet, usually by a plastic protective cap, if one is available. Keep cylinders away from heat and ventilated when in a vehicle.

WARNING

If there is a strong smell of LPG: Close valve on the cylinder. Check all connections for leaks by wetting the fittings with a solution of soap and water. Bubbles which appear or bubbles which grow indicate that a leak exists. Do not smoke or light a cigarette, or check for leaks using a match, open flame source or lighter. Contact a qualified technician to inspect and repair an LPG system if a leak is found, before using the generator.

Grounding

Your generator must be properly connected to an appropriate ground to help prevent electric shock.

WARNING

Failure to properly ground the generator can result in electric shock.

A ground terminal connected to the frame of the generator has been provided (see Controls and Features for terminal location). For remote grounding, connect of a length of heavy gauge (12 AWG minimum) copper wire between the generator ground terminal and a copper rod driven into the ground. We strongly recommend that you consult with a qualified electrician to ensure compliance with local electrical codes.

Neutral Floating*

- Neutral circuit **IS NOT** electrically connected to the frame/ground of the generator.
- The generator (stator winding) is isolated from the frame and from the AC receptacle ground pin.
- Electrical devices that require a grounded receptacle pin connection will not function if the receptacle ground pin is not functional.

Neutral Bonded to Frame*

- Neutral circuit **IS** electrically connected to the frame/ground of the generator.
- The generator system ground connects lower frame cross-member below the alternator. The system ground is connected to the AC neutral wire.

**See your Specifications section for specified type of grounding.*

OPERATION

Generator Location

NEVER operate the generator inside any building, including garages, basements, crawlspaces and sheds, enclosure or compartment, including the generator compartment of a recreational vehicle. Please consult your local authority. In some areas, generators must be registered with the local utility. Generators used at construction sites may be subject to additional rules and regulations. Generators should be on a flat, level surface at all times. (Even while not in operation) Generators must have at least 5 ft. (1.5 m) of clearance from all combustible material. In addition to clearance from all combustible material, generators must also have at least 3 ft. (91.4 cm) of clearance on all sides to allow for adequate cooling, maintenance and servicing. Generators should never be started or operated in the back of a SUV, camper, trailer, in the bed of a truck (regular, flat or otherwise), under staircases/stairwells, next to walls or buildings, or in any other location that will not allow for adequate cooling of the generator and/or the muffler. DO NOT contain generators during operation. Allow generators to properly cool before transport or storage.

Place the generator in a well-ventilated area. DO NOT place the generator near vents or intakes where exhaust fumes could be drawn into occupied or confined spaces. Carefully consider wind and air currents when positioning generator.

Failure to follow proper safety precautions may void manufacturer's warranty.

⚠ WARNING

Do not operate or store the generator in rain, snow, or wet weather.

Using a generator or electrical appliance in wet conditions, such as rain or snow, or near a pool or sprinkler system, or when your hands are wet, could result in electrocution.

⚠ WARNING

During operation the muffler and exhaust fumes will become hot. If adequate cooling and breathing space are not supplied, or if the generator is blocked or enclosed, temperatures can become extremely heated and may lead to fire.

Surge Protection

Electronic devices, including computers and many programmable appliances use components that are designed to operate within a narrow voltage range and may be affected by momentary voltage fluctuations. While there is no way to prevent voltage fluctuations, you can take steps to protect sensitive electronic equipment.

– Install UL1449, CSA-listed, plug-in surge suppressors on the outlets feeding your sensitive equipment.
  Surge suppressors come in single- or multi-outlet styles. They're designed to protect against virtually all short-duration voltage fluctuations.

Fuel Selector Switch

The fuel selector switch on the front panel of the generator is designed to choose the desired fuel source – gasoline or propane (LPG). To select the desired fuel source, simply rotate the selector switch to the fuel symbol on the panel. Turn the fuel selector switch to the 9 o'clock (horizontal) position for LPG operation.

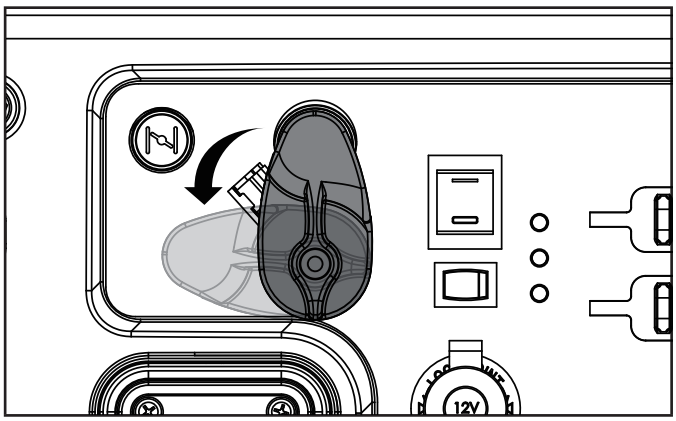

Turn the fuel selector switch to the 12 o'clock (vertical) position for gasoline operation.

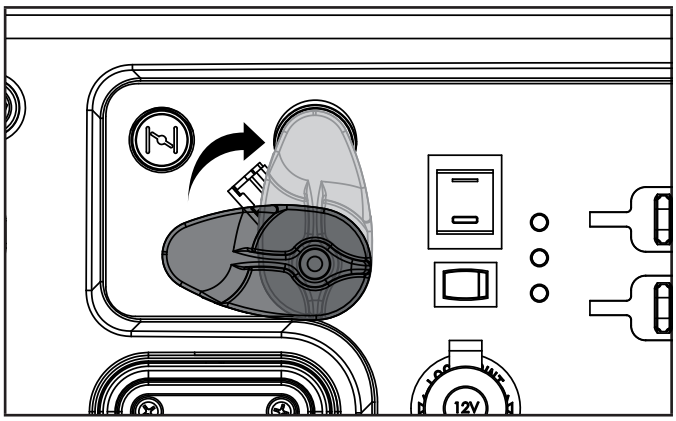

NOTICE

When the fuel selector switch is in the 12 o'clock position, the gas fuel valve is OPEN. To CLOSE the gas fuel valve, turn the selector switch to the 9 o'clock position.

Starting the Engine: Gasoline

1. Make certain the generator is on a flat, level surface.
2. Disconnect all electrical loads from the generator. Never start or stop the generator with electrical devices plugged in or turned on.
3. Turn the fuel selector switch to the vertical “GAS” position.

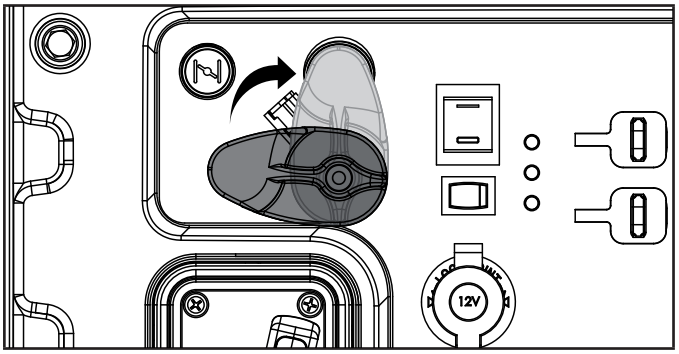

4. Push the engine switch to the “ON” position.

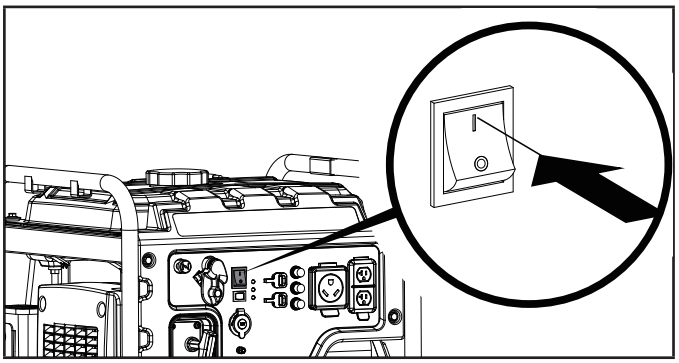

5. Pull the choke out to the full “CHOKE” position.

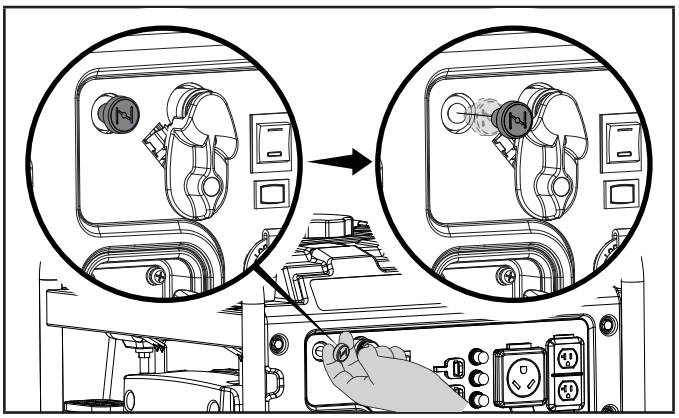

6. Pull the starter cord slowly until resistance is felt and then pull rapidly. DO NOT pull more than 4 times.

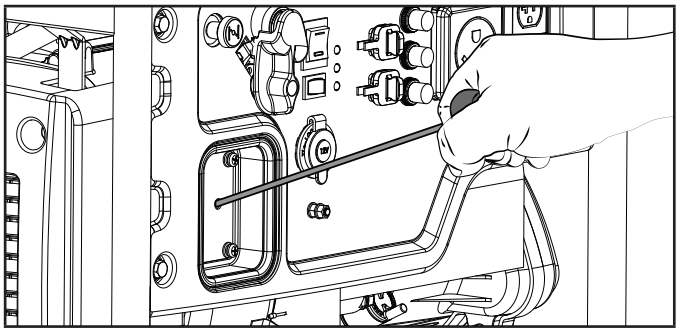

7. DO NOT OVER– CHOKE. Allow the engine to warm up several seconds before gradually pushing the choke to the “RUN” position.

NOTICE

For gasoline restarts with hot engine in hot ambient > 86°F (30°C): Keep the choke in 75% of the “CHOKE” position for 1-2 pulls of the recoil cord. After first pulls, push choke to the “RUN” position for up to 3 more pulls of the recoil cord. Too much choke leads to spark plug fouling/engine flooding due to the lack of incoming air. This will cause the engine not to start.

NOTICE

For gas starting in cold ambient < 59°F (15°C): The choke must be in 100% of the “CHOKE” position for manual start procedures. Do not over-choke. As soon as engine starts, allow the engine to warm up for 20 seconds and push the choke knob in the “RUN” position.

NOTICE

If the engine starts but does not continue to run make certain that the generator is on a flat, level surface. The engine is equipped with a low oil sensor that will prevent the engine from running when the oil level falls below a critical threshold.

Starting the Engine: Propane (LPG)

1. Make certain the generator is on a flat, level surface.
2. Disconnect all electrical loads from the generator. Never start or stop the generator with electrical devices plugged in or turned on.
3. Turn the fuel selector switch to the horizontal “LPG” position and connect LPG hose.

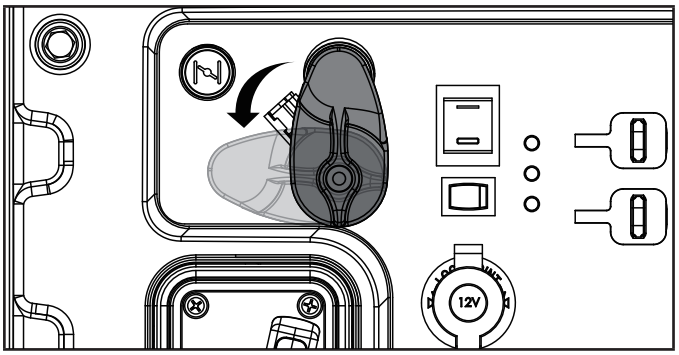

4. Fully open the LPG cylinder fuel knob.

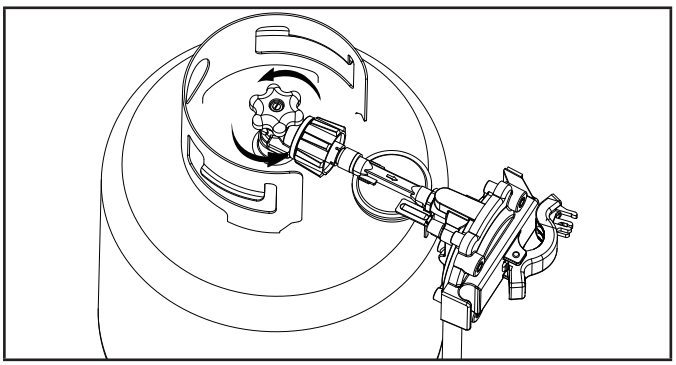

5. Push the engine switch to the “ON” position.

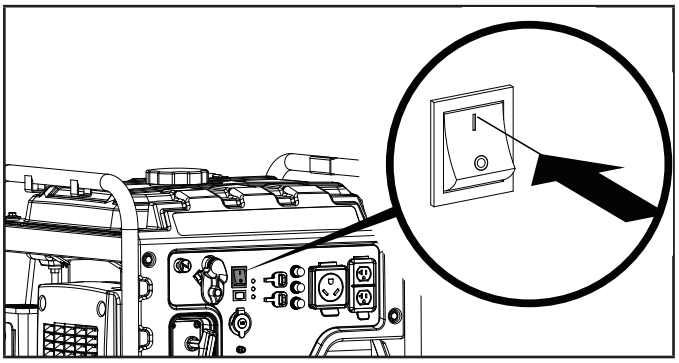

6. Pull the choke to the half “CHOKE” position.

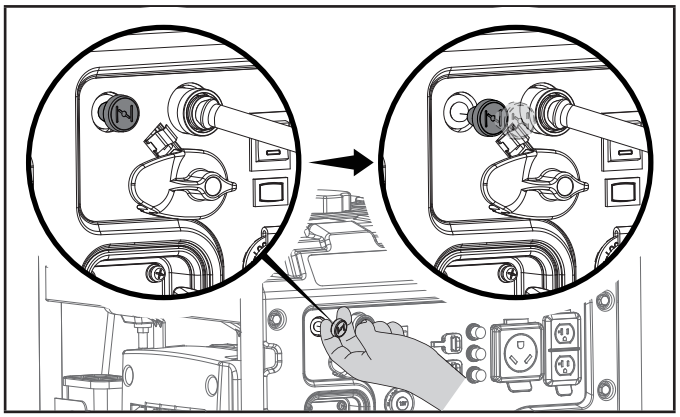

7. Pull the starter cord slowly 1-5 times to prime the engine with LPG.
8. Pull the starter cord slowly until resistance is felt and then pull rapidly.

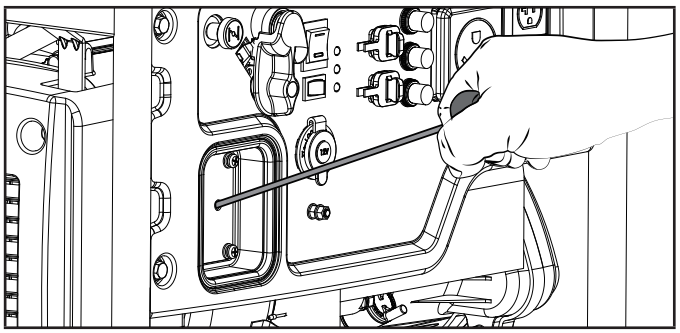

9. Allow the engine to warm up several seconds before gradually pushing the choke to the “RUN” position.

NOTICE

For LPG restarts with hot engine in hot ambient temperature > 86°F (30°C), move the choke to the half “CHOKE” position and prime the engine with only 1-2 slow pulls. Then follow normal starting procedure.

NOTICE

For LPG starting in cold ambient < 59°F (15°C), move the choke to the half “CHOKE” position and prime the engine with 3-5 slow pulls. Then follow normal starting procedure.

NOTICE

If the engine starts but does not run make certain that the generator is on a flat, level surface. The engine is equipped with a low oil sensor that will prevent the engine from running when the oil level falls below a critical threshold.

NOTICE

Observing frost on LPG containers and regulators is common during operation and normally is not an indication of a problem. As LPG vaporizes and travels from the tank to the generator engine it expands. The amount of frost that forms can be affected by the size of the container, the amount of fuel being used, the humidity of the air and other operating conditions. In unusual situations this frost may eventually restrict the flow of gas to the generator resulting in deteriorating performance. For example, if the tank temperature is reduced to a very low level then the rate at which the LPG vaporizes is also reduced and may not provide sufficient fuel flow to the engine. This is not an indication of a problem with the generator but only a problem with the flow of gas from the LPG container. If generator performance seems to be deteriorating at the same time that ice formation is observed on tank valve, hose or regulator then some actions may be taken to eliminate this symptom. In these rare situations it can be helpful to reduce or eliminate the cold fuel system effects by doing one of the following:–Exchanging fuel tanks to allow the first tank to warm up, repeating as necessary–Placing the LPG container at the end of the generator near the handle, where engine fan air flows out from the generator. This air is slightly heated by flowing over the engine. The container should not be placed in the path of the muffler outlet.–The container can be temporarily warmed by pouring warm water over the top of the tank.

Connecting Electrical Loads

Let the engine stabilize and warm up for a few minutes after starting.

Plug in and turn on the desired 120 or 240 (if applicable) Volt AC single phase, 60 Hz electrical loads.

– DO NOT connect 3-phase loads to the generator.

– DO NOT overload the generator.

WARNING

Connecting a generator to your electric utility company's power lines or to another power source may be against the law. In addition this action, if done incorrectly, could damage your generator and appliances and could cause serious injury or even death to you or a utility worker who may be working on nearby power lines. If you plan to run a portable electric generator during an outage, please notify your electric utility company immediately and remember to plug your appliances directly into the generator. Do not plug the generator into any electric outlet in your home. Doing so could create a connection to the utility company power lines. You are responsible for ensuring that your generator's electricity does not feed back into the electric utility power lines.

If the generator will be connected to a building electrical system, consult your local utility company or a qualified electrician. Connections must isolate generator power from utility power and must comply with all applicable laws and codes.

Do Not Overload Generator

Capacity

Follow these simple steps to calculate the running and starting watts necessary for your purposes:

1. Select the electrical devices you plan on running at the same time.
2. Total the running watts of these items. This is the amount of power you need to keep your items running.
3. Identify the highest starting wattage of all devices identified in step 1. Add this number to the number calculated in step 2. Starting wattage is the surge of power needed to start some electric driven equipment. Following the steps listed under "Power Management" will guarantee that only one device will be starting at a time.

Power Management

Use the following formula to convert voltage and amperage to watts:

Volts × Amps = Watts

To prolong the life of your generator and attached devices, follow these steps to add electrical load:

1. Start the generator with no electrical load attached.
2. Allow the engine to run for several minutes to get up to temperature.
3. Plug in and turn on the first item. It is best to attach the item with the largest load first.
4. Allow the engine to stabilize.
5. Plug in and turn on the next item.
6. Allow the engine to stabilize.
7. Repeat steps 5-6 for each additional item.

NOTICE

Never exceed the specified capacity when adding loads to the generator.

Eco (Economy) Mode

The Eco Mode switch can be activated to turn on economy control in order to minimize fuel consumption and noise while operating the unit during times of reduced electrical output. Eco Mode allows the engine speed to idle during periods of non-use.

The engine speed returns to normal when an electrical load is connected. When the economy switch is off, the engine runs at normal speed continuously.

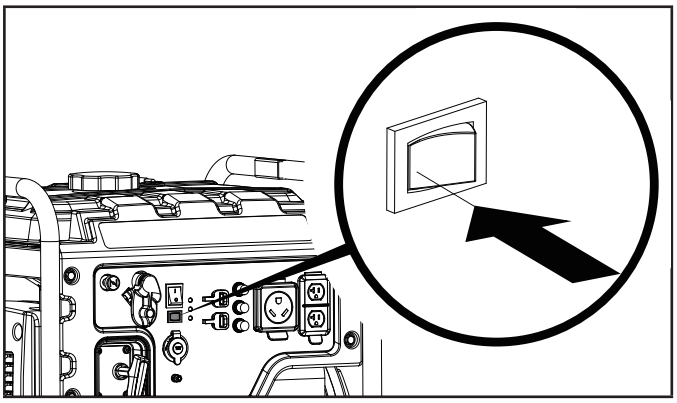

CAUTION

For periods of high electrical load or momentary fluctuations, the Eco Mode should be off.

12V DC Automotive Style Outlet

The 12V DC outlet(s) can be used with supplied accessories and other commercially available 12V DC automotive style plugs. The DC output is unregulated and can damage some products. Confirm the input voltage range of your item is at least 12-24V DC. When using the DC outlet turn the Eco Mode switch to the “OFF” position.

WARNING

Do not operate a device while it is plugged in to the 12V DC outlet.

Prolonged exposure to engine exhaust can cause serious injury or death.

CAUTION

While charging a device do not place on the exhaust side of the generator. Extreme heat caused by exhaust can damage the device, and cause a potential fire hazard.

Battery Charging

1. Before connecting the battery charging cable (included) to a battery that is installed in a vehicle, disconnect the vehicle battery ground cable from the negative (–) battery terminal.
2. Plug the battery charging cable into the 12V DC receptacle of the generator.
3. Connect the red (+) battery charger lead to the red (+) battery terminal.
4. Connect the black (–) battery charger lead to the black (–) battery terminal.
5. Start the generator.

Important: The 12V DC outlet is ONLY to be used with the supplied 12V DC battery charging cable. The 12V DC output is unregulated and will damage other 12V DC products. When using the 12V DC outlet, turn the Economy mode switch to the “OFF” position. Be sure all electric devices including the lines and plug connections are in good condition before connection to the generator.

CAUTION

Do not start the vehicle while the battery charging cable is connected and the generator is running. It will not give the battery a boost of power. The vehicle or the generator may be damaged. Charge only vented wet lead acid batteries. Other types of batteries may burst, causing personal injury or damage.

NOTICE

Be sure all electric devices including the lines and plug connections are in good condition before connection to the generator.

Parallel Operation

The Champion model 100574 is parallel ready and can be operated in parallel with another Champion unit to increase the total available electrical power. A Champion model 100319 parallel kit (optional equipment) is required for parallel operation. For a list of compatible models or to order a parallel kit, please call customer service at 1-877-338-0999 or visit www.championpowerequipment.com.

Detailed instructions for parallel kit installation and operation of the connected generators are provided in the parallel kit operator's manual.

Stopping the Engine

Gasoline:

1. Turn off and unplug all electrical loads. Never start or stop the generator with electrical devices plugged in or turned on.
2. Let the generator run at no-load for several minutes to stabilize internal temperatures of the engine and generator.
3. Press the engine switch to the "OFF" position.

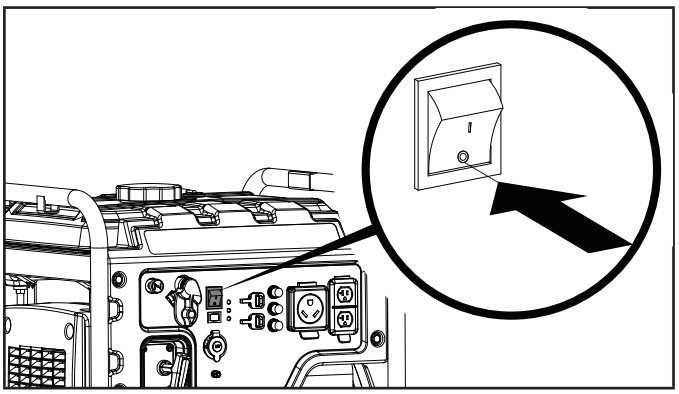

Propane:

1. Turn off and unplug all electrical loads. Never start or stop the generator with electrical devices plugged in or turned on.
2. Let the generator run at no-load for several minutes to stabilize internal temperatures of the engine and generator.
3. Close the fuel valve on the propane cylinder.

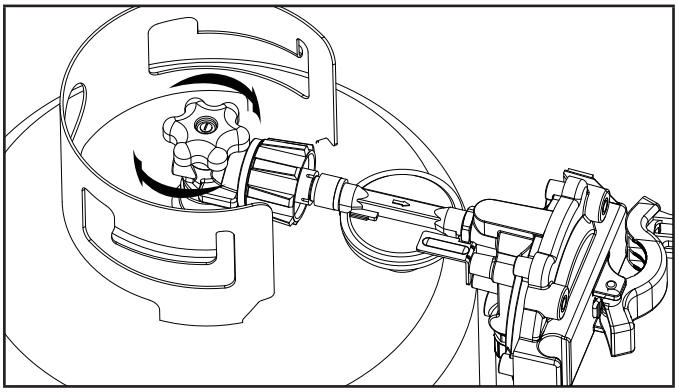

Moving the Generator

- ALWAYS turn the generator off and ensure the fuel valve is closed.
- ALWAYS make sure engine and muffler are cooled down before the generator can be handled safely (typically 15-30 minutes).
- Lift unit up by the frame with 2 people and move to the desired location.
- Do not drop or strike unit or place under heavy objects.
- Failure to follow these instructions could result in personal injury or damage to the generator.

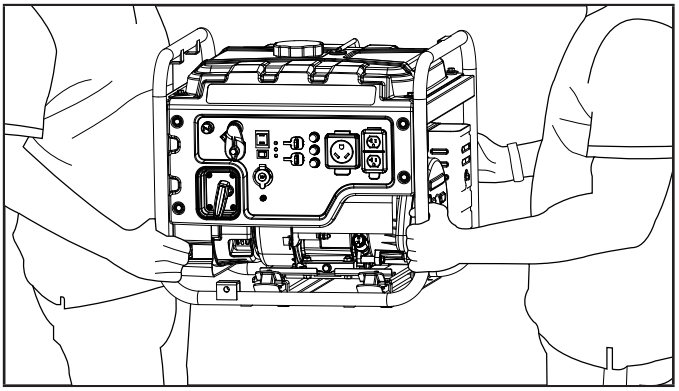

Operation at High Altitude

The density of air at high altitudes is lower than at sea level. Engine power is reduced as the air mass and air-fuel ratio decrease. Engine power and generator output will be reduced approximately 3½% for every 1000 ft. of elevation above sea level. At high altitudes increased exhaust emissions can also result due to the increased enrichment of the air fuel ratio. Other high altitude issues can include hard starting, increased fuel consumption and spark plug fouling.

To alleviate high altitude issues other than the natural power loss, CPE can provide a high altitude carburetor main jet. The alternative main jet and installation instructions can be obtained by contacting our Technical Support Team. Installation instructions are also available in the Technical Bulletin area of the CPE website.

The part number and recommended minimum altitude for the application of the high altitude carburetor main jet is listed in the following table.

In order to select the correct high altitude main jet it is necessary to identify the carburetor model. For this purpose, a code is stamped on the side of the carburetor. Select the correct high altitude jet part number corresponding to the carburetor code found on your particular carburetor.

Carb. Code	High Alt. Jet Part Number	Min. Altitude
P22-15-H	27.131017.01.01	3,500 ft. (1,067 m)

⚠ WARNING

Operation using the alternative main jet at elevations lower than the recommended minimum altitude can damage the engine. For operation at lower elevations, the originally supplied standard main jet must be used. Operating the engine with the wrong engine configuration at a given altitude may increase its emissions and decrease fuel efficiency and performance.

MAINTENANCE

Make certain that the generator is kept clean and stored properly. Only operate the unit on a flat, level surface in a clean, dry operating environment. DO NOT expose the unit to extreme conditions, excessive dust, dirt, moisture or corrosive vapors.

⚠ WARNING

Never operate a damaged or defective generator.

⚠ WARNING

Improper maintenance will void your warranty.

NOTICE

For Emission control devices and systems, read and understand your responsibilities for service as stated in the Emission Control Warranty Statement of this manual.

The owner/operator is responsible for all periodic maintenance.

Complete all scheduled maintenance in a timely manner.

Correct any issue before operating the generator.

For service or parts assistance, contact our Technical Support Team at 1-877-338-0999.

Cleaning the Generator

⚠ CAUTION

DO NOT spray generator directly with water.

Water can enter the generator through the cooling slots and damage the generator windings. It can also contaminate the fuel system.

1. Use a damp cloth to clean exterior surfaces of the generator.
2. Use a soft bristle brush to remove dirt and oil.
3. Use an air compressor (25 PSI) to clear dirt and debris from the generator.
4. Inspect all air vents and cooling slots to ensure that they are clean and unobstructed.

To prevent accidental starting, remove and ground the spark plug wire before performing any service.

Changing the Engine Oil

Change oil when the engine is warm. Refer to the oil specification to select the proper grade for your operating environment.

1. Remove the oil drain bolt with a 12 mm socket (not included) and extension.

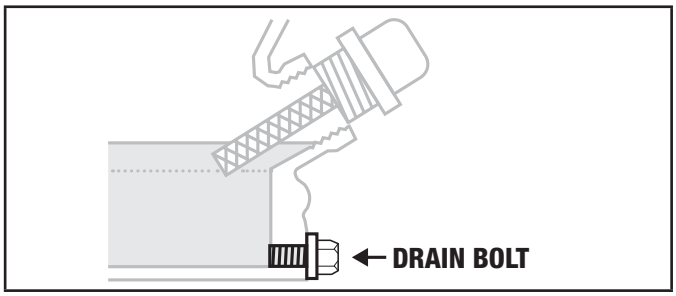

2. Allow the oil to drain completely into an appropriate container.
3. Replace the oil drain bolt.
4. Add oil according to “Add Engine Oil” in Assembly section. DO NOT OVERFILL. Oil not included for routine maintenance.
5. Dispose of used oil at an approved waste management facility.

NOTICE

Once oil has been added, a visual check should show oil about 1-2 threads from running out of the fill hole. If using the dipstick to check oil level, DO NOT screw in the dipstick while checking.

Cleaning and Adjusting the Spark Plug

1. Remove the spark plug cable from the spark plug.
2. Use a spark plug socket tool (not included), or a 13/16 in. (21 mm) socket (not included) to remove the plug.
3. Inspect the electrode on the plug. It must be clean and not worn to produce the spark required for ignition.
4. Make certain the spark plug gap is 0.028-0.031 in. (0.7-0.8 mm).

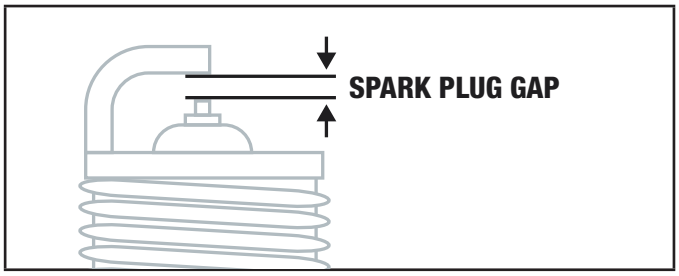

5. Refer to the spark plug types in Specifications when replacing the plug.
6. Firmly re-install the plug.
7. Attach the spark plug cable to the spark plug.

Cleaning the Air Filter

1. Remove the snap-on cover holding the air filter to the assembly.
2. Remove the foam element.
3. Wash in liquid detergent and water. Squeeze thoroughly dry in a clean cloth.
4. Saturate in clean engine oil.
5. Squeeze in a clean, absorbent cloth to remove all excess oil.
6. Place the filter in the assembly.
7. Reattach the air filter cover and snap in place.

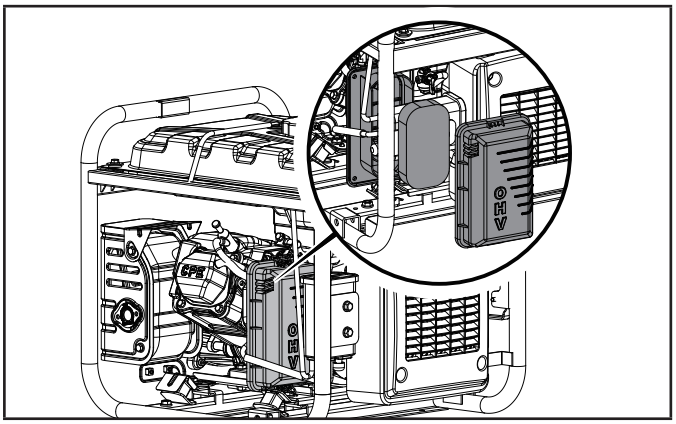

Cleaning the Spark Arrestor

1. Allow the engine to cool completely before servicing the spark arrestor.
2. Remove the two or three screws (varies by model) holding the cover plate which retains the spark arrestor to the muffler.
3. Remove the spark arrestor screen.
4. Carefully remove the carbon deposits from the spark arrestor screen with a wire brush.

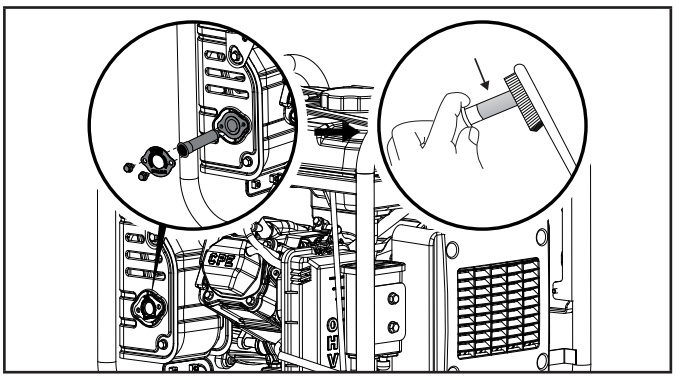

**See your model's parts list for specified type of spark arrestor.*

5. Replace the spark arrestor if it is damaged.
6. Position the spark arrestor on the muffler and attach with the screws removed in step 2.

⚠ CAUTION

Failure to clean the spark arrestor will result in degraded engine performance.

NOTICE

Federal and local laws and administrative requirements indicate when and where spark arrestors are required. When ordered, spark arrestors are required for operation of this generator in National Forest lands. In California, this generator must not be used on any forest-covered land, brush-covered land, or grass-covered land unless the engine is equipped with a spark arrestor.

Adjusting the Governor

⚠ WARNING

Tampering with the factory set governor will void your warranty.

The air-fuel mixture is not adjustable. Tampering with the governor can damage your generator and your electrical devices and will void your warranty. Contact our Technical Support Team at 1-877-338-0999 for all other service and/or adjustment needs.

Maintenance Schedule

Follow the service intervals indicated in the following maintenance schedule.

Service your generator more frequently when operating in adverse conditions.

Contact our Technical Support Team at 1-877-338-0999 to locate the nearest CPE certified service dealer for your generator or engine maintenance needs.

EVERY 8 HOURS OR PRIOR TO EACH USE

- ☐ Check oil level
- ☐ Clean around air intake and muffler
- ☐ Check propane (LPG) hose for leaks

FIRST 5 HOURS (BREAK IN)

- ☐ Change oil

EVERY 50 HOURS OR ANNUALLY

- ☐ Clean air filter
- ☐ Change oil if operating under heavy load or in hot environments

EVERY 100 HOURS OR ANNUALLY

- ☐ Change oil
- ☐ Clean/adjust spark plug
- ☐ Clean spark arrestor
- ☐ Clean fuel valve filter*

EVERY 250 HOURS

- ☐ Clean combustion chamber*
- ☐ Check/adjust valve clearance*

EVERY 3 YEARS

- ☐ Replace fuel line*
- ☐ Replace LPG hose

** To be performed by knowledgeable, experienced owners or CPE certified service centers.*

STORAGE

⚠ DANGER

Gasoline vapors are highly flammable and extremely explosive.

Fire or explosion can cause severe burns or death. Only fill or drain fuel outdoors in a well-ventilated area. DO NOT pump gasoline directly into the generator. Use an approved container to transfer the fuel to the generator. Never use a gasoline container, gasoline tank, or any other fuel item that is damaged or appears damaged. DO NOT overfill the gasoline tank. Always keep fuel away from sparks, open flames, pilot lights, heat and other sources of ignition.
DO NOT light or smoke cigarettes.

Short Term Storage (up to 30 days)

Gasoline may gum up and clog the carburetor if the generator is not run or carburetor drained within 4 weeks.

1. Be sure all appliances are disconnected from the generator.
2. Start the generator as instructed in “Starting the Engine” section.
3. Turn the fuel valve to the horizontal “OFF” (LPG) position.
4. Let the engine run until fuel starvation has stopped the engine. This usually takes a few minutes.
5. Move the engine switch to the “OFF” position.

Mid Term Storage (30 days – 1 year)

Gasoline in the tank has a maximum shelf life of up to 1 year with the addition of a properly formulated fuel stabilizer and stored in a cool, dry place.

1. Be sure all appliances are disconnected from the generator.
2. Add a properly formulated fuel stabilizer to the gasoline tank.
3. Turn the fuel valve to the vertical “ON” position.
4. Start and run the generator for 10 minutes so the treated gasoline cycles through the fuel system.
5. **Option 1: Drain Gasoline from Carburetor**

   5a. Turn engine switch to the “OFF” position and allow generator to cool completely before continuing.

   5b. Turn the fuel valve to the horizontal “OFF” position.

   5c. Use the drain bolt on the carburetor to empty any excess gasoline from the carburetor into an appropriate container. Use a funnel (and appropriate hose if necessary) under the carburetor drain bolt to avoid spillage.

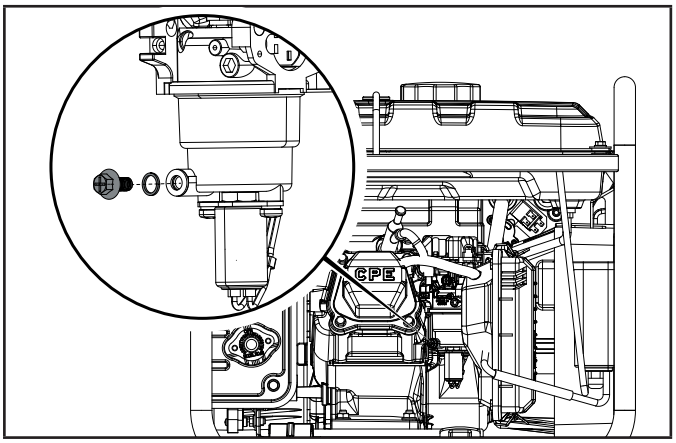

5d. When gasoline stops flowing from the carburetor, replace and tighten the carburetor drain bolt and be sure to properly dispose of the drained gasoline according to local regulations or guidelines.

6. **Option 2: Run Dry**

6a. With the generator running, turn the fuel valve to the "OFF" position and allow the generator to run until the engine stops from complete fuel starvation. This may take a few minutes.

6b. Turn engine switch to the "OFF" position and allow generator to cool completely before continuing.

7. Remove the spark plug cap and spark plug and pour about a tablespoon of oil into the cylinder.
8. Pull the recoil cord slowly to crank the engine to distribute the oil and lubricate the cylinder.
9. Install the spark plug and spark plug cap.
10. Clean the generator according to Cleaning the Generator.
11. Store the generator in a cool, dry place out of direct sunlight.

Long Term Storage (over 1 year)

For storage over 1 year, the gasoline tank and carburetor must be completely drained of gasoline.

1. Follow steps 1-4 according to Mid Term Storage.

   1a. Turn engine switch to the "OFF" position and allow generator to cool completely before continuing.

2. Use the drain bolt on the carburetor to empty any excess gasoline from the gasoline tank and carburetor into an appropriate container. Use a funnel (and appropriate hose if necessary) under the carburetor drain bolt to avoid spillage.
3. When gasoline stops flowing from the carburetor, replace and tighten the carburetor drain bolt and be sure to properly dispose of the drained gasoline according to local regulations or guidelines.
4. Turn the fuel valve to the horizontal "OFF" position.
5. Follow steps 8-11 according to Mid Term Storage.

Removing from Storage

If the generator has been improperly stored for a long period of time with gasoline in the gasoline tank and/or carburetor, all fuel must be drained and the carburetor must be thoroughly cleaned. This process involves technically advanced tasks. For assistance please call our Technical Support Team at 1-877-338-0999.

If the gasoline tank and carburetor were properly emptied of all gasoline prior to the generator being stored, follow the below steps when removing from storage.

1. Be sure the engine switch is in the "OFF" position.
2. Add gasoline to the generator according to Add Fuel: Gasoline.
3. Turn the fuel valve to the vertical "ON" position.
4. After 5 minutes check the carburetor and air filter areas for any leaking gasoline. If any leaks are found, the carburetor will need to be disassembled and cleaned or replaced. If no gasoline leaks are found, turn the fuel valve to the "OFF" position.
5. Check engine oil level and add clean, fresh oil if needed. See Oil Specifications for proper oil type.
6. Check and clear air filter of any obstructions such as bugs or cobwebs. If necessary, clean air filter according to Cleaning the Air Filter.
7. Start the generator according to Starting the Engine.

SPECIFICATIONS

Generator Specifications

Generator Model	100574
Start Type	Manual
Watts (Gas) (Starting/Running)	4000/3500
Watts (LPG) (Starting/Running)	3600/3150
AC Volts	120
AC Amps @ 120V	29.2
DC Volts	12
DC Amps	8
Frequency	60 Hz
Phase	Single
Grounding Type	Neutral Floating
Weight	82.2 lb. (37.3 kg)
Length	20.5 in. (52 cm)
Width	18.3 in. (46.4 cm)
Height	18.9 in. (47.9 cm)

Engine Specifications

Model	YF172IV-L_G
Displacement	224 cc
Type	4-Stroke OHV

Spark Plug

OEM Type	NHSP F6RTC
Replacement Type	NGK BPR6ES or equivalent
Gap	0.028-0.031 in. (0.7-0.8 mm)

Valve

Intake Clearance	0.005-0.007 in. (0.13-0.17 mm)
Exhaust Clearance	0.007-0.009 in. (0.18-0.22 mm)

NOTICE

A technical bulletin regarding valve adjustment procedures is available at www.championpowerequipment.com.

Oil Specifications

DO NOT OVERFILL.

Type	*See following chart
Capacity	20.3 fl. oz. (0.6 qt.)

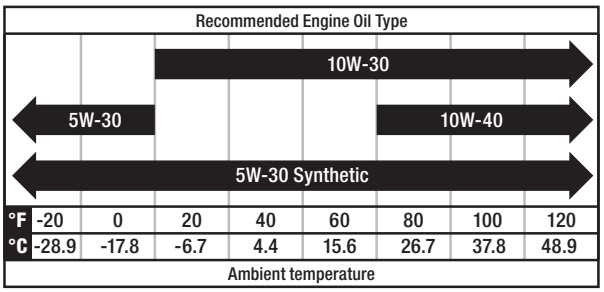

NOTICE

Temperature will affect engine oil and engine performance. Change the type of engine oil used based on the temperature to suit the engine needs.

Fuel Specifications

Use unleaded gasoline with a minimum octane rating of 87 and an ethanol content of 10% or less by volume. DO NOT USE E15 or E85. DO NOT OVERFILL.

Gasoline Capacity	2.9 gal. (11 L)

Propane (LPG)

– Use only an approved LPG cylinder equipped with an OPD (overfilling prevention device) valve.

Temperature Specifications

Starting Temperature Range (°F/°C)	5 to 104/-15 to 40

NOTICE

An important message about temperature: Your product is designed and rated for continuous operation at ambient temperatures up to 104°F (40°C). When needed, it may be operated at temperatures ranging from 5°F (-15°C) to 122°F (50°C) for short periods of time. If exposed to temperatures outside this range during storage, it should be brought back within this range before operation. In any event, the product must always be operated outdoors, in a well-ventilated area and away from doors, windows and vents.

Parts Diagram

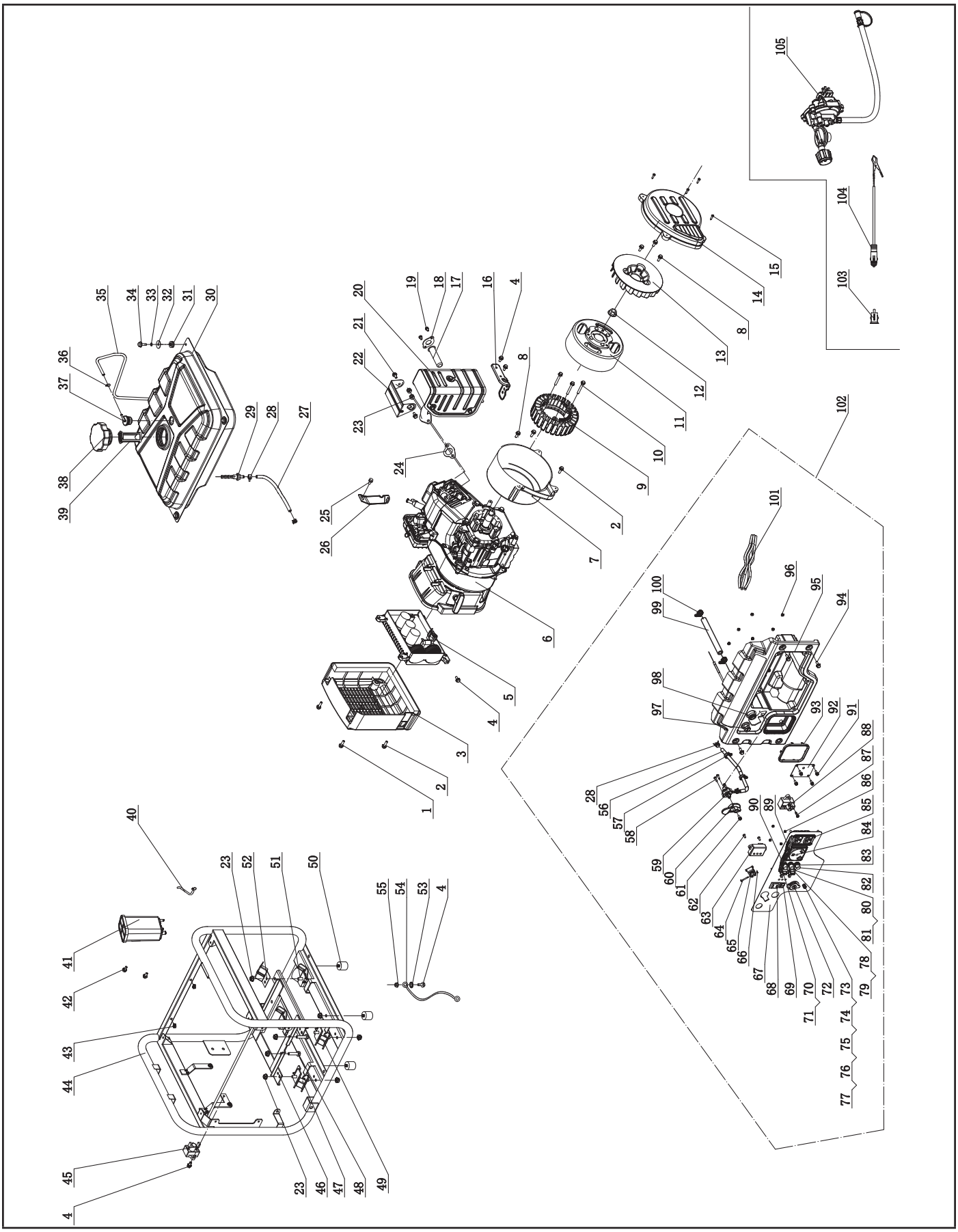

Parts List

#	Part Number	Description	Qty.
1	1.5789.0625	Flange Bolt M6 × 25	2
2	1.5789.0620	Flange Bolt M6 × 20	4
3	85.220005.01	Protection Cover, Control Unit	1
4	1.5789.0612	Flange Bolt M6 × 12	5
5	85.221000.08	Control Unit, 3.3KW, 120V/60Hz, Wireless Parallel	1
6	85.490	Engine, 224cc	1
7	85.190002.01	End Housing, Motor	1
8	1.5789.0615	Flange Bolt M6 × 15	4
9	85.191200.14	Stator Assembly	1
10	1.9074.14.0650	Bolt/Washer Assembly M6 x50	3
11	85.191100.03	Rotor Assembly	1
12	2.02.006	Nut M14 × 1.5	1
13	83.190001.01	Fan, Generator	1
14	85.190003.01	End Cover, Generator	1
15	1.845.4219	Screw ST4.2 × 19	4
16	85.100100.01.2	Bracket, Muffler	1
17	46.101300.08	Spark Arrester Assembly	1
18	46.101503.08	Plate, Spark Arrester	1
19	1.9074.4.0514	Screw/Washer Assembly M5 × 14	2
20	85.101000.01.2	Muffler Assembly	1
21	1.5789.0610	Flange Bolt M6 × 10	2
22	85.101203.01.2	Cover, Exhaust Pipe	1
23	1.6177.1.08	Lock Nut M8, Flange	18
24	26.100001.00	Gasket, Muffler	1
25	1.5789.0608	Flange Bolt M6 × 8	1
26	23.090006.21	Holder, Air Cleaner	1
27	85.070011.04	Fuel Pipe 350+25 mm, Fuel Tank to Fuel Valve	1
28	2.06.016	Clamp Ø8.7 × b8	4
29	21.070600.03	Fitting, Fuel Tank	1
30	85.071000.02.48	Fuel Tank, 11L, Yellow	1
31	122.070015.01	Mount Vibration, Fuel Tank	4
32	2.03.004.1	Flat Washer, Ø24 × Ø6.5 × 1.5, Black	4
33	1.93.06	Lock Washer Ø6	4
34	1.5789.0620.1	Flange Bolt M6 × 20, Black	4
35	24.070014.01	Pipe, Reversal Valve, 720+32mm	1

#	Part Number	Description	Qty.
36	2.06.006	Clamp Ø7 × Ø1	3
37	152.070800.00	Reversal Valve	1
38	122.070100.07	Fuel Tank Cap	1
39	122.070300.03	Fuel Filter	1
40	85.070014.01	Pipe, Air Cleaner, 260+30mm	1
41	122.070700.00	Carbon Canister, 320CC	1
42	1.5789.0610.1	Flange Bolt M6 × 10, Black	2
43	2.05.001	Clamp Ø8 × 6.5	2
44	61156.2.2	Frame, 520 × 461 × 472	1
45	5.1800.003	Rectifier	1
46	85.201600.01	Supporter	1
47	85.201200.01	Motor Mount 1	1
48	1.5789.0832	Flange Bolt M8 × 32	4
49	85.201200.02	Motor Mount 2	2
50	122.201400.01	Rubber, Support	4
51	85.201200.03	Motor Mount 3	1
52	85.100007.01	Insulation Board, Motor Mount	1
53	1.862.06	Lock Washer Ø6, Toothed	1
54	5.1900.093	Grounding Line 180mm	1
55	1.6177.1.06	Lock Nut M6, Flange	1
56	85.070011.03	Fuel Pipe, Fuel Valve to Carburator, 350+25 mm	1
57	2.05.009	Clamp Ø12.5 × 7	2
58	1.845.4819	Screw ST4.8 × 19	2
59	83.070400.01.0	Fuel Valve	1
60	87.070001.01	Knob, Fuel Valve	1
61	1.9074.4.0414.1	Screw/Washer Assembly M4 × 14, Black	1
62	1.818.0514.3	Screw M5 × 14, Green	2
63	83.210016.00	Speed Limiter	1
64	1.823.0325	Screw M3 × 25	2
65	5.1050.000	Switch	1
66	1.6170.03	Nut M3	2
67	85.019.9.2	Control Panel, Black	1
68	5.1000.004.1	Engine Switch, Black	1
69	5.1010.003.1	Switch, Economy, Black	1
70	83.210001.00.3	Connect Port, 125V/25A, Red	1
71	5.1870.010.3	Receptacle Cover, Connect Port, Red	1
72	5.1110.005	Receptacle, DC 12V	1

#	Part Number	Description	Qty.
73	1.5783.0520.1	Bolt M5 × 20, Black	1
74	1.93.05.1	Lock Washer Ø5, Black	2
75	1.862.05	Lock Washer Ø5, Toothed	1
76	1.6170.05.1	Nut M5, Black	2
77	1.97.1.05.1	Washer Ø5, Black	1
78	83.210001.00.1	Connect Port, 125V/25A, Black	1
79	5.1870.010	Receptacle Cover, Connect Port, Black	1
80	5.1200.308	8Amp Circuit Breaker, Push Button	1
81	5.1870.014	Receptacle Cover, Push Button	3
82	5.1210.920	20Amp Circuit Breaker, Push Button, CSA	1
83	5.1210.930	30Amp Circuit Breaker, Push Button, CSA	1
84	5.1120.036	Receptacle TT-30R	1
85	5.1120.010	Receptacle 5-20R Duplex	1
86	1.6177.1.04.1	Lock Nut M4, Flange, Black	6
87	1.845.4216	Screw ST4.2 × 16	1
88	5.1820.004	Charger	1
89	5.1870.008	Receptacle Cover, Receptacle 5-20R Duplex	1
90	5.1870.004	Receptacle Cover, Receptacle TT-30R	1
91	1.9074.4.0514.1	Screw/Washer Assembly M5 × 14, Black	4
92	85.061200.02.2	Guide Plate, Rope, Black	1
93	113.200106.00	Protector, Front Cover	1
94	1.5789.0615.1	Flange Bolt M6 × 15, Black	4
95	85.210002.03	Control Box	1
96	1.6177.1.05	Lock Nut M5, Flange	6
97	85.130300.02	Pull Choke Assembly	1
98	85.070021.00	Quick Coupler	1
99	152.070012.12	Pipe 325 mm	1
100	2.06.023	Clip Ø20	2
101	100574.21.10	Wire Assembly	1
102	100574.21	Control Panel Assembly	1
103	9.1700.008	Plug, USB 5V/2.4A	1
104	9.1600.009	Cables, 12V, 2m, CSA	1
105	87.130000.92	LPG Hose With Regulator 2.3 ft., 0.7 m	1

Engine Parts Diagram

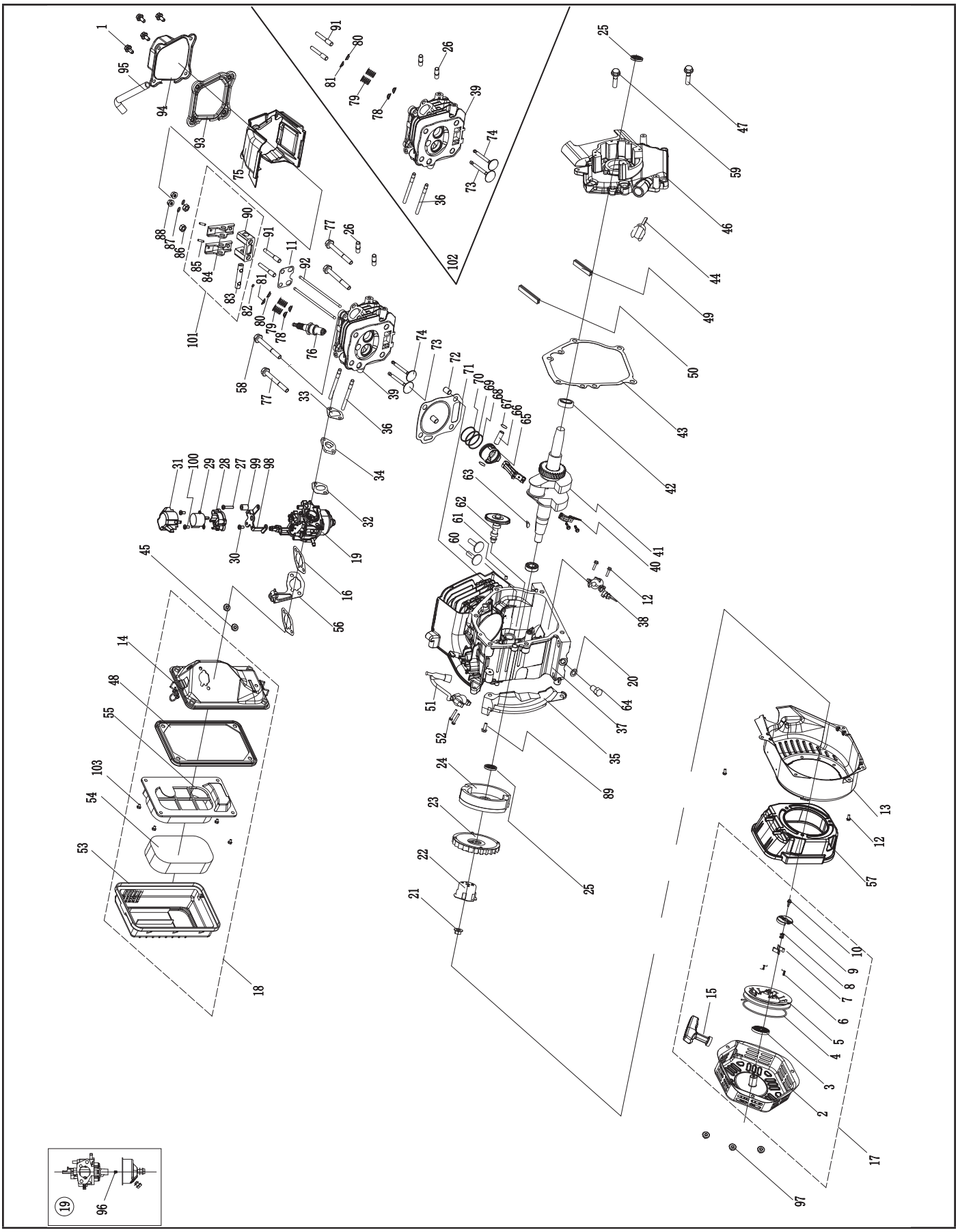

Engine Parts List

#	Part Number	Description	Qty.
1	1.5789.0615	Flange Bolt M6 × 15	4
2	22.061100.00.2	Cover, Recoil Starter, Black	1
3	21.061005.00	Spring, Recoil Starter	1
4	2.10.003.1	Rope Ø4 × 1550, Black	1
5	21.061001.01	Reel, Recoil Starter	1
6	45.060003.00	Spring, Ratchet	2
7	45.060002.00	Starter Ratchet, Steel	2
8	45.060009.00	Spring, Ratchet Guide	1
9	45.060007.00	Ratchet Guide	1
10	45.060008.00	Screw, Ratchet Guide	1
11	24.040004.00	Guide Plate, Push Rod	1
12	1.5789.0612	Flange Bolt M6 × 12	6
13	85.080100.03.48	Fan Cover, Yellow	1
14	85.091100.01	Base, Air Cleaner	1
15	21.061300.01.48	Handle, Recoil, Soft, Yellow	1
16	24.130004.20	Gasket, Air Cleaner	2
17	22.061000.01	Recoil Assembly	1
18	85.091000.01	Air Cleaner Assembly	1
19	85.131000.05	Carburetor	1
20	2.03.016	Washer Ø10 × Ø16 × 1.5, Drain Bolt	1
21	2.02.006	Nut M14 × 1.5	1
22	23.060001.01	Pulley, Starter	1
23	27.080001.00	Cooling Fan	1
24	24.120100.06	Flywheel	1
25	2.11.001	Oil Seal Ø25 × Ø41.3 × 6	2
26	2.01.010	Stud Bolt M8 × 35	2
27	1.9074.4.0420.1	Screw M4 × 20	1
28	85.132100.04	Support, Stepper Motor	1
29	85.132200.01	Stepper Motor	1
30	1.9074.3.0408	Screw M4 × 8	3
31	81.132001.00	Cover, Stepper Motor	1
32	22.130003.00	Gasket, Carburetor	1
33	24.130002.00	Gasket, Insulator	1
34	27.130001.00	Insulator, Carburetor	1
35	23.080600.00	Air Guide, Right Side	1
36	2.01.003	Stud Bolt M6 × 90	2
37	85.030100.01	Crankcase	1
38	21.127000.02	Oil Level Sensor	1
39	26.010100.01	Cylinder Head, 224cc	1
40	27.050200.00	Connecting Rod	1
41	85.050100.01	Crankshaft	1

#	Part Number	Description	Qty.
42	1.276.6205	Bearing 6205	2
43	24.030008.00	Gasket, Crankcase Cover	1
44	46.031000.00.48	Oil Dipstick Assembly, Yellow	1
45	1.6177.06	Flange Nut M6	2
46	85.030007.01	Cover, Crankcase	1
47	1.5789.0832	Flange Bolt M8 × 32	5
48	23.091002.21	Seal, Air Cleaner	1
49	27.030013.01	Seal Strip, Crankcase Cover, Short	1
50	27.030013.00	Seal Strip, Crankcase Cover, Long	1
51	22.123000.02	Ignition Coil	1
52	1.5789.0625	Flange Bolt M6 × 25	2
53	27.091200.01	Cover, Air Cleaner	1
54	23.091003.21	Element, Air Cleaner	1
55	23.091001.21	Separator, Air Cleaner	1
56	85.130200.01	Support, Choker Rod	1
57	85.220005.03	Protective Cover, Control Unit, Engine	1
58	2.08.121	Flange Bolt M10 × 65	1
59	1.5789.0840	Flange Bolt M8 × 40	1
60	25.040013.00	Lifter, Valve	2
61	2.04.001	Dowel Pin Ø9 × 14	2
62	27.041000.01	Camshaft	1
63	2.14.012	Woodruff Key 4 × 7.5 × 19	1
64	2.08.037	Drain Bolt M10 × 1.25 × 25	1
65	27.050005.00	Piston	1
66	23.050003.00	Pin, Piston	1
67	2.09.001	Circlip Ø18 × Ø1	2
68	27.050303.00	Ring, Oil	1
69	27.050302.00	Ring, Second Piston	1
70	27.050301.00	Ring, First Piston	1
71	27.030009.01	Gasket, Cylinder Head	1
72	2.04.003	Dowel Pin Ø10 × 14	2
73	23.040002.02	Valve, Intake	1
74	27.040006.00	Valve, Exhaust	1
75	85.080200.01	Air Shroud, Cylinder	1
76	2.15.002(F6RTC)	Spark Plug F6RTC	1
77	1.5789.0865	Flange Bolt M8 × 65	3
78	23.040017.00	Oil Seal, Valve, Steel	2
79	21.040003.00	Spring, Valve	2

#	Part Number	Description	Qty.
80	21.040007.00	Retainer, Exhaust Valve Spring	1
81	21.040001.00	Retainer, Intake Valve Spring	1
82	21.040008.00	Rotator, Exhaust Valve	1
83	24.040202.00	Shaft, Rocker Arm	1
84	22.040009.00	Rocker Arm	2
85	22.040012.00	Screw, Valve Adjustment	2
86	21.040021.00	Nut M6 × 0.5, Lock	2
87	1.97.1.06	Washer Ø6	2
88	1.6177.1.06	Lock Nut M6, Flange	2
89	1.5789.0620	Flange Bolt M6 × 20	1
90	24.040201.00	Retainer, Rocker Arm	1
91	23.040010.00	Bolt, Rocker Arm	2
92	27.040005.00	Push Rod	2
93	21.020002.01	Gasket, Cylinder Head Cover	1
94	24.021000.00	Cover, Cylinder Head	1
95	23.020001.02	Breather Tube, 112 + 35 mm	1
96	27.131017.01	Main Jet, Standard	1
	27.131017.01.01	Main Jet, Altitude	/
97	1.6177.1.05	Lock Nut M5, Flange	3
98	85.130005.04	Support, Stepper Motor	1
99	2.13.034	Bush Ø5 × Ø10 × 12	1
100	1.823.0306.1	Screw M3 × 6	2
101	24.040200.00	Rocker Arm Assembly	1
102	27.010000.00	Cylinder Head Assembly	1
103	2.08.166	Flange Bolt M5×12	4

Wiring Diagram

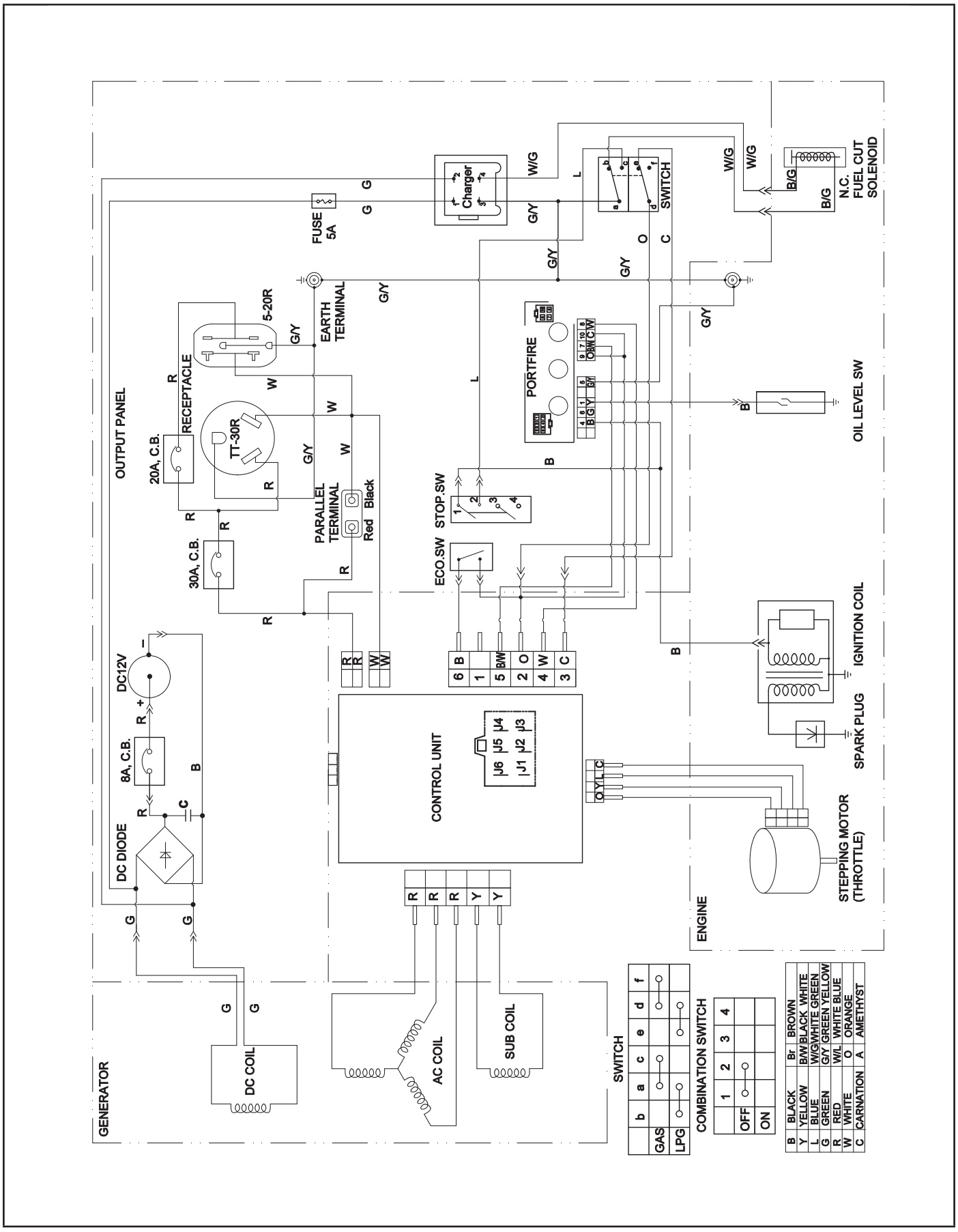

TROUBLESHOOTING

Problem	Cause	Solution
Engine will not start.	No fuel.	Add fuel.
	Faulty spark plug.	Clean and adjust spark plug or replace.
	Low oil level.	Fill crankcase to the proper level.
		Place generator on a flat, level surface.
	Spark plug wire loose.	Attach wire to spark plug.
	Fuel valve is closed.	Open fuel valve.
	Engine switch OFF.	Press engine switch ON.
	Old fuel or water in fuel.	Drain fuel and replace with fresh fuel.
	Flooded with fuel.	Let unit stand for 10 mins.
Engine starts but runs roughly.	Choke in the wrong position.	Move choke until it stops under RUN position or push in completely.
	Dirty air filter.	Clean or replace air filter.
	Dirty fuel valve.	Clean the fuel valve.
	Clogged spark arrestor.	Clean spark arrestor.
Engine shuts down during operation.	Out of fuel.	Fill fuel tank.
	Low oil level.	Fill crankcase to the proper level. Place generator on a flat, level surface.
	Clogged spark arrestor.	Clean spark arrestor.
Generator cannot supply enough power or overheating.	Generator is overloaded.	Review load and adjust. See “Connecting Electrical Loads.”
	Dirty air filter.	Clean or replace air filter.
	Choke in wrong position.	Move choke until it stops under RUN position or push in completely.
Engine is running but no AC output.	Poor cord connection.	Check all connections.
	Circuit breaker is open.	Reset circuit breaker.
	Loose wiring.	Inspect and tighten wiring connections.
	Other.	Contact the help line.
Engine hunts or falters.	Engine governor defective.	Contact the help line.
	Dirty fuel valve.	Clean the fuel valve.
	Carburetor is dirty and running lean.	Contact the help line.
	Choke in wrong position.	Move choke until it stops under RUN position or push in completely.
DUAL FUEL MODELS ONLY: Engine will not stop.	Propane valve is still open.	Turn the propane valve to the CLOSED position on the tank.
Repeated circuit breaker tripping.	Overload.	Review load and adjust. See “Connecting Electrical Loads.”
	Faulty power cords or device.	Check for damaged, bare or frayed wires. Replace defective device.
	Circuit breaker still too hot.	Let unit sit for 5 mins.

For other issues and technical support:

Technical Support Team
Mon-Fri 8:30 AM-5:00 PM (PST/PDT)
Toll Free 1-877-338-0999
support@championpowerequipment.com

WARRANTY*

CHAMPION POWER EQUIPMENT
3 YEAR LIMITED WARRANTY

Warranty Qualifications

To register your product for warranty and FREE lifetime call center technical support please visit:
https://www.championpowerequipment.com/register

To complete registration you will need to include a copy of the purchase receipt as proof of original purchase. Proof of purchase is required for warranty service. Please register within ten (10) days from date of purchase.

Repair/Replacement Warranty

CPE warrants to the original purchaser that the mechanical and electrical components will be free of defects in material and workmanship for a period of three years (parts and labor) from the original date of purchase and 270 days (parts and labor) for commercial and industrial use. Transportation charges on product submitted for repair or replacement under this warranty are the sole responsibility of the purchaser. This warranty only applies to the original purchaser and is not transferable.

Do Not Return The Unit To The Place Of Purchase

Contact CPE's Technical Service and CPE will troubleshoot any issue via phone or e-mail. If the problem is not corrected by this method, CPE will, at its option, authorize evaluation, repair or replacement of the defective part or component at a CPE Service Center. CPE will provide you with a case number for warranty service. Please keep it for future reference. Repairs or replacements without prior authorization, or at an unauthorized repair facility, will not be covered by this warranty.

Warranty Exclusions

This warranty does not cover the following repairs and equipment:

Normal Wear

Products with mechanical and electrical components need periodic parts and service to perform well. This warranty does not cover repair when normal use has exhausted the life of a part or the equipment as a whole.

Installation, Use and Maintenance

This warranty will not apply to parts and/or labor if the product is deemed to have been misused, neglected, involved in an accident, abused, loaded beyond the product's limits, modified, installed improperly or connected incorrectly to any electrical component. Normal maintenance is not covered by this warranty and is not required to be performed at a facility or by a person authorized by CPE.

Other Exclusions

This warranty excludes:

- Cosmetic defects such as paint, decals, etc.
- Wear items such as filter elements, o-rings, etc.
- Accessory parts such as starting batteries, and storage covers.
- Failures due to acts of God and other force majeure events beyond the manufacturer's control.
- Problems caused by parts that are not original Champion Power Equipment parts.

When applicable, this warranty does not apply to products used for prime power in place of a utility.

Limits of Implied Warranty and Consequential Damage

Champion Power Equipment disclaims any obligation to cover any loss of time, use of this product, freight, or any incidental or consequential claim by anyone from using this product.
THIS WARRANTY AND THE ATTACHED U.S. EPA and/or CARB EMISSION CONTROL SYSTEM WARRANTIES (WHEN APPLICABLE) ARE IN LIEU OF ALL OTHER WARRANTIES, EXPRESS OR IMPLIED, INCLUDING WARRANTIES OF MERCHANTABILITY OR FITNESS FOR A PARTICULAR PURPOSE.

A unit provided as an exchange will be subject to the warranty of the original unit. The length of the warranty governing the exchanged unit will remain calculated by reference to the purchase date of the original unit.

This warranty gives you certain legal rights which may change from state to state or province to province. Your state or province may also have other rights you may be entitled to that are not listed within this warranty.

Contact Information

Address

Champion Power Equipment, Inc.
12039 Smith Ave.
Santa Fe Springs, CA 90670 USA
www.championpowerequipment.com

Customer Service

Mon – Fri 8:30 AM – 5:00 PM (PST/PDT)
Toll Free: 1-877-338-0999
info@championpowerequipment.com
Fax no.: 1-562-236-9429

Technical Service

Mon – Fri 8:30 AM – 5:00 PM (PST/PDT)
Toll Free: 1-877-338-0999
tech@championpowerequipment.com
24/7 Tech Support: 1-562-204-1188

*Except as otherwise stipulated in any of the following enclosed Emission Control System Warranties (when applicable) for the Emission Control System: U.S. Environment Protection Agency (EPA) and/or California Air Resources Board (CARB). Whichever warranty applies for the longer period, either this 3 year limited warranty or the applicable Emission Control System Warranty, shall supersede the other.

CHAMPION POWER EQUIPMENT, INC. (CPE), THE UNITED STATES ENVIRONMENT PROTECTION AGENCY (U.S. EPA) AND THE CALIFORNIA AIR RESOURCES BOARD (CARB) EMISSION CONTROL SYSTEM WARRANTY

Your Champion Power Equipment (CPE) engine complies with both the U.S. EPA and state of California Air Resources Board (CARB) Exhaust and Evaporative emissions regulations.

YOUR WARRANTY RIGHTS AND OBLIGATIONS:

The US EPA, California Air Resources Board, and CPE are pleased to explain the Federal and California Exhaust and Evaporative Emission Control Systems Warranty on your 2020 small off-road engine (SORE) and engine powered equipment. In California, new equipment that use small off-road engines (SORE) must be designed, built and equipped to meet the State's stringent anti smog standards. In the other states, new engines and equipment must be designed, built and equipped, at the time of sale, to meet U.S. EPA regulations for small off-road engines (SORE). CPE must warrant the exhaust and evaporative emission control system on your small off-road engine (SORE) for the period listed below, provided there has been no abuse, neglect, unapproved modification, or improper maintenance of your equipment leading to the failure of the exhaust and evaporative emission control systems.

Your evaporative emission control system may include parts such as: carburetors, fuel tanks, fuel lines, (for liquid fuel and fuel vapors), fuel caps, valves, canisters, filters, clamps, connectors, and other associated components. Also included for your exhaust emission control system may be fuel-injection system, the ignition system, catalytic converter and other exhaust emission related assemblies. Where a warrantable condition exits, CPE will repair your small off-road engine (SORE) at no cost to you including diagnosis, parts and labor.

MANUFACTURER'S WARRANTY COVERAGE:

This exhaust and evaporative emission control system is warranted for two years. If any exhaust and evaporative, emission related part on your engine or equipment is defective in, the part will be repaired or replaced by CPE.

OWNER WARRANTY RESPONSIBILITIES:

As the small off-road engine (SORE) owner, you are responsible for the performance of the required maintenance listed in your Owner's Manual. CPE recommends that you retain all your receipts covering maintenance on your small off-road engine (SORE), but CPE cannot deny warranty coverage solely for the lack of receipts.

As the small off-road engine (SORE) owner, you should be aware that CPE may deny you warranty coverage if your small, off-road engine (SORE) or a part has failed due to abuse, neglect, improper maintenance or unapproved modifications.

You are responsible for presenting your small off-road engine to an Authorized CPE distribution center, service center or alternative service outlet as described in (3)(f.) below or CPE dealer or CPE, Santa Fe Springs, Ca. as soon as the problem exists. The warranty repairs shall be completed in a reasonable amount of time, not to exceed 30 days.

If you have any questions regarding your warranty coverage, you should contact:

Champion Power Equipment, Inc.
Customer Service
12039 Smith Ave.
Santa Fe Springs, CA 90670
1-877-338-0999
tech@championpowerequipment.com

EXHAUST AND EVAPORATIVE EMISSION CONTROL SYSTEM WARRANTY

The following are specific provisions relative to your Exhaust and Evaporative Emission Control System (ECS) Warranty Coverage.

1. **APPLICABILITY:** This warranty shall apply to 1995 and later model year California small off-road engines (SORE) (for other states, 1997 and later model year engines). The ECS Warranty Period shall begin on the date the new engine or equipment is delivered to its original, end-use purchaser, and shall continue for 24 consecutive months thereafter.

2. **GENERAL EMISSIONS WARRANTY COVERAGE**
   CPE warrants to the original, end-use purchaser of the new engine or equipment and to each subsequent purchaser that each of its small off-road engines (SORE) is:

   2a. Designed, built and equipped to conform to U.S. EPA emissions standards for spark-ignited engines at or below 19 kilowatts and all applicable regulations adopted by the California Air Resources Board, and

   2b. Free from defects in materials and workmanship that cause the failure of a warranted part to be identical in all material respects to the part as described in the engine manufacturer's application for certification for a period of two years.

3. **THE WARRANTY ON EXHAUST AND EVAPORATIVE EMISSION-RELATED PARTS WILL BE INTERPRETED AS FOLLOWS:**

   3a. Any warranted part that is not scheduled for replacement as required maintenance in the Owners Manual shall be warranted for the ECS Warranty Period. If any such part fails during the ECS Warranty Period, it shall be repaired or replaced by CPE according to Subsection "d" below. Any such part repaired or replaced under the ECS Warranty shall be warranted for any remainder of the ECS Warranty Period.

   3b. Any warranted, exhaust and evaporative emissions-related part which is scheduled only for regular inspection as specified in the Owners Manual shall be warranted for the ECS Warranty Period. A statement in such written instructions to the effect of "repair or replace as necessary", shall not reduce the ECS Warranty Period. Any such part repaired or replaced under the ECS Warranty shall be warranted for the remainder of the ECS Warranty Period.

   3c. Any warranted, exhaust and evaporative emissions-related part which is scheduled for replacement as required maintenance in the Owner's Manual shall be warranted for the period of time prior to the first scheduled replacement point for that part. If the part fails prior to the first scheduled replacement, the part shall be repaired or replaced by CPE according to Subsection "d" below. Any such exhaust and evaporative emissions-related part repaired or replaced under the ECS Warranty, shall be warranted for the remainder of the ECS Warranty Period prior to the first scheduled replacement point for such emissions-related part.

   3d. Repair or replacement of any warranted, exhaust and evaporative emissions-related part under this ECS Warranty shall be performed at no charge to the owner at a CPE Authorized Service Outlet.

   3e. The owner shall not be charged for diagnostic labor which leads to the determination that a part covered by the ECS Warranty is in fact defective, provided that such diagnostic work is performed at a CPE Authorized Service Outlet.

   3f. CPE shall pay for covered exhaust and evaporative emissions warranty repairs at non-authorized service outlets under the following circumstances:

      i. The service is required in a population center with a population over 100,000 according to U.S. Census 2000 without a CPE Authorized Service Outlet AND

      ii. The service is required more than 100 miles from a CPE Authorized Service Outlet. The 100 mile limitation does not apply in the following states: Alaska, Arizona, Colorado, Hawaii, Idaho, Montana, Nebraska, Nevada, New Mexico, Oregon, Texas, Utah and Wyoming.

   3g. CPE shall be liable for damages to other original engine components or approved modifications proximately caused by a failure under warranty of an emission-related part covered by the ECS Warranty.

   3h. Throughout the ECS Warranty Period, CPE shall maintain a supply of warranted exhaust and evaporative emission-related parts sufficient to meet the expected demand for such exhaust and evaporative emission-related parts.

   3i. Any CPE Authorized and approved exhaust and evaporative emission-related replacement part may be used in the performance of any ECS Warranty maintenance or repair and will be provided without charge to the owner. Such use shall not reduce CPE's warranty obligation.

   3j. Unapproved add-on or modified parts may not be used to modify or repair a CPE engine. Such use voids this ECS Warranty and shall be sufficient grounds for disallowing an ECS Warranty claim. CPE shall not be liable hereunder for failures of any warranted parts of a CPE engine caused by the use of such an unapproved add-on or modified part.

EMISSION-RELATED PARTS INCLUDE THE FOLLOWING: (using those portions of the list applicable to the engine)

Systems covered by this warranty	Parts Description
Fuel Metering System	Fuel regulator, Carburetor and internal parts
Air Induction System	Air cleaner, Intake manifold
Ignition System	Spark plug and parts, Magneto ignition system
Exhaust System	Exhaust manifold, catalytic converter
Miscellaneous Parts	Tubing, Fittings, Seals, Gaskets, and Clamps associated with these listed systems.
Evaporative Emissions	Fuel Tank, Fuel Cap, Fuel Lines (for liquid fuel and fuel vapors), Fuel Line Fittings, Clamps, Pressure Relief Valves, Control Valves, Control Solenoids, Electronic Controls, Vacuum Control Diaphragms, Control Cables, Control Linkages, Purge Valves, Gaskets, Liquid/Vapor Separator, Carbon Canister, Canister Mounting Brackets, Carburetor Purge Port Connector

TO OBTAIN WARRANTY SERVICE:

You must take your CPE engine or the product on which it is installed, along with your warranty registration card or other proof of original purchase date, at your expense, to any Champion Power Equipment dealer who is authorized by Champion Power Equipment, Inc. to sell and service that CPE product during his normal business hours. Alternate service locations defined in Section (3)(f.) above must be approved by CPE prior to service. Claims for repair or adjustment found to be caused solely by defects in material or workmanship will not be denied because the engine was not properly maintained and used.

If you have any questions regarding your warranty rights and responsibilities, or to obtain warranty service, please write or call Customer Service at Champion Power Equipment, Inc.

Champion Power Equipment, Inc.
12039 Smith Ave.
Santa Fe Springs, CA 90670
1-877-338-0999
Attn.: Customer Service
tech@championpowerequipment.com