SOT370-1

Standard product orientation 12NC ending 118

Rev. 02 — 28 July 2011 Packing information

1. Packing method

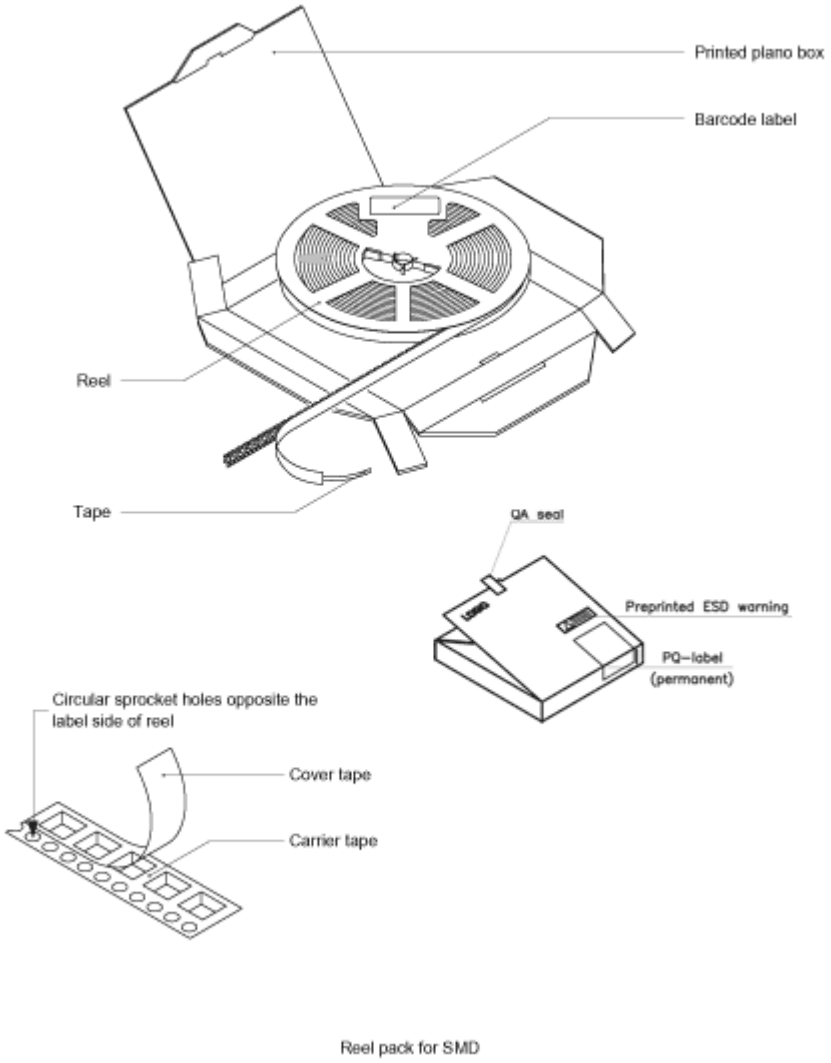

Fig. 1

Package version	12NC ending	Reel dimensions d x w (mm)	SPQ/PQ (pcs)	Reels per box	Outer box dimensions l x w x h (mm)
SOT370-1	118	330 x 24	1000	1	341 x 338 x 39

2. Product orientation

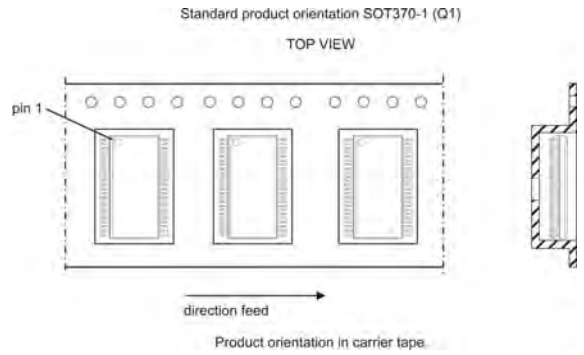

Fig. 2

3. Carrier tape dimensions

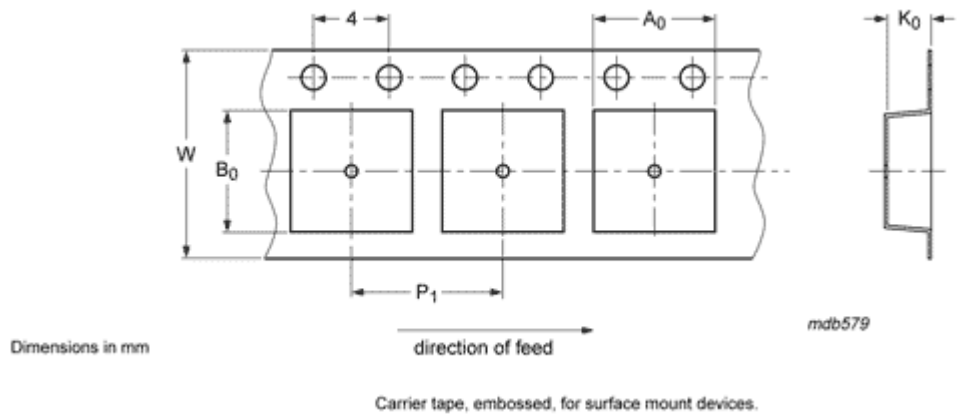

Fig. 3

A_0 (mm)	B_0 (mm)	K_0 (mm)	T (mm)	P_1 (mm)	W (mm)
11.00	16.30	3.3	-	16.0	24

© NXP B.V. 2006. All rights reserved.

4. Carrier tape dimensions

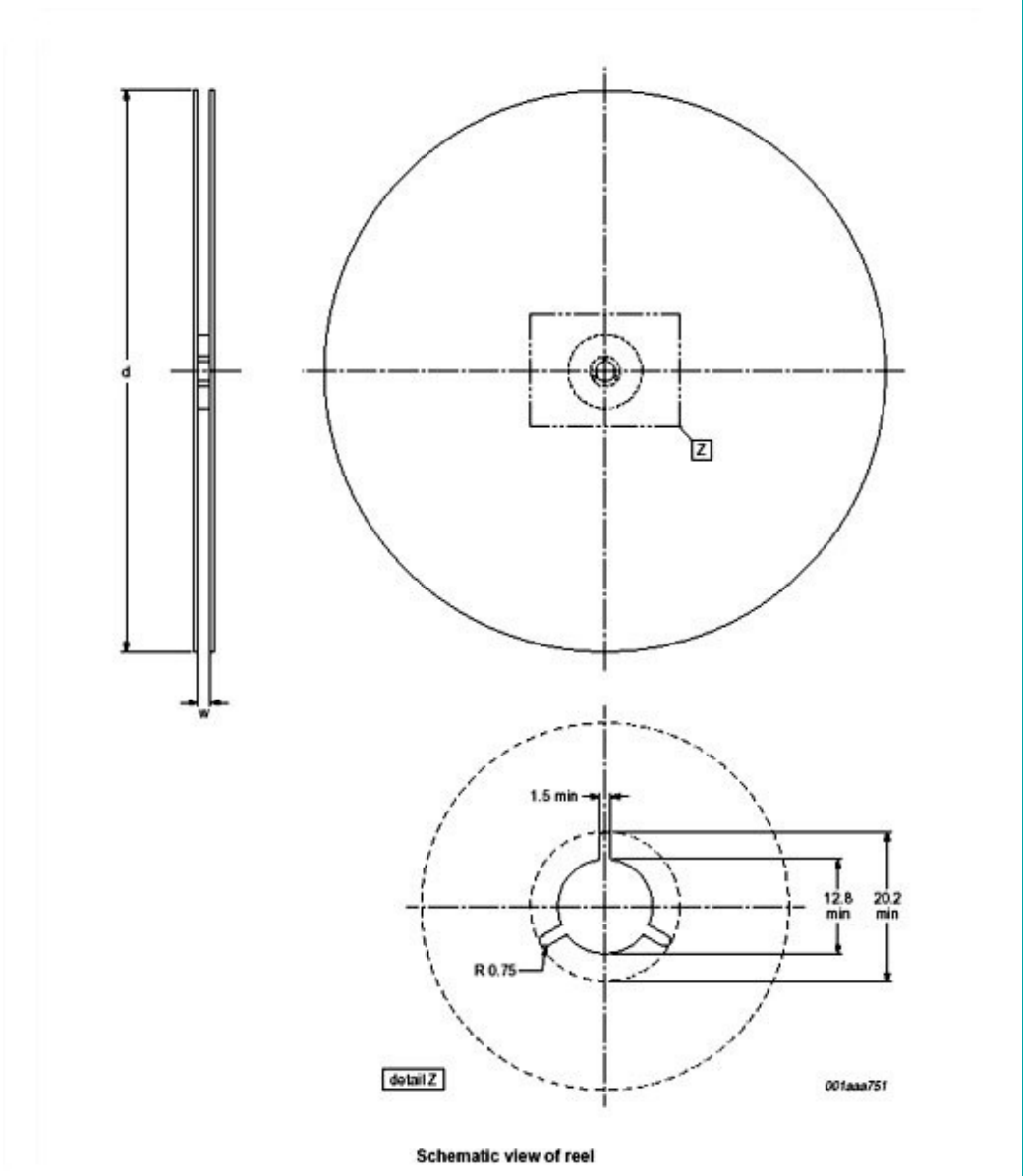

Fig. 4

Package version	12NC ending	Reel dimensions d x w (mm)	SPQ/PQ (pcs)
SOT370-1	118	330 x 24	1000

© NXP B.V. 2006. All rights reserved.

5. Barcode label box and reel information

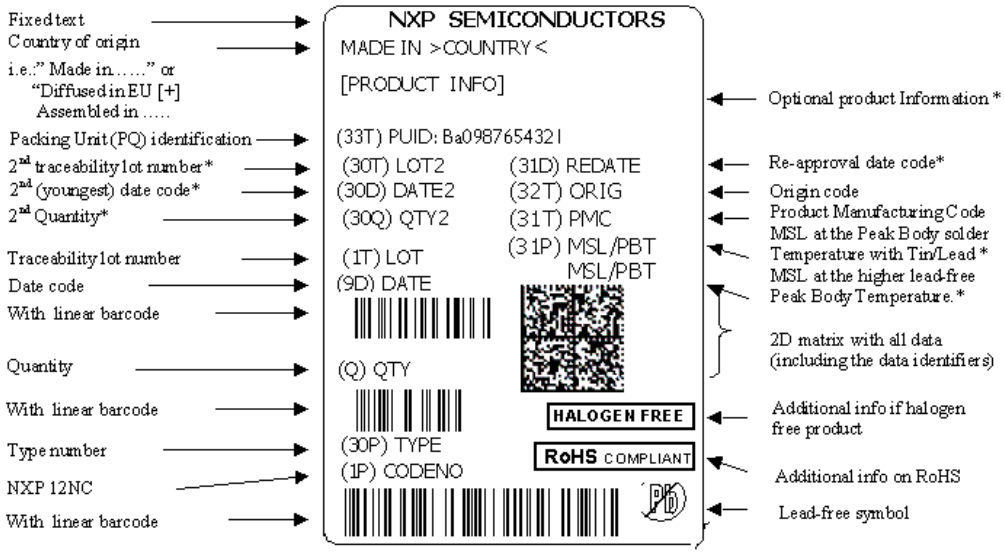

Fig. 5

Label dimensions l x w (mm)
100 x 75

Reproduction in whole or in part is prohibited without the prior written consent of the copyright owner. The information presented in this document does not form part of any quotation or contract, is believed to be accurate and reliable and may be changed without notice. No liability will be accepted by the publisher for any consequence of its use. Publication thereof does not convey nor imply any license under patent- or other industrial or intellectual property rights.

© NXP B.V. 2007. All rights reserved.

For more information, please visit: http://www.nxp.com
For sales office addresses, email to: salesaddresses@nxp.com

Date of release: 28 July 2011

Document identifier: SOT370-1_2