YORK	AIR-COOLED SCROLL CHILLERS	
RENEWAL PARTS	Supersedes: 150.72-RP1 (114)	Form 150.72-RP1 (1117)

MODELS YLAA0070 - YLAA0175
DESIGN SERIES A, B & C
DEVELOPMENT LEVEL A

R-410A
70 - 175 TON
60 Hz

Issue Date:
November 17, 2017

IMPORTANT!

READ BEFORE PROCEEDING!

GENERAL SAFETY GUIDELINES

This equipment is a relatively complicated apparatus. During installation, operation maintenance or service, individuals may be exposed to certain components or conditions including, but not limited to: refrigerants, materials under pressure, rotating components, and both high and low voltage. Each of these items has the potential, if misused or handled improperly, to cause bodily injury or death. It is the obligation and responsibility of operating/service personnel to identify and recognize these inherent hazards, protect themselves, and proceed safely in completing their tasks. Failure to comply with any of these requirements could result in serious damage to the equipment and the property in which it is situated, as well as severe personal injury or death to themselves and people at the site.

This document is intended for use by owner-authorized rigging, installation, and operating/service personnel. It is expected that these individuals possess independent training that will enable them to perform their assigned tasks properly and safely. It is essential that, prior to performing any task on this equipment, this individual shall have read and understood the on-product labels, this document and any referenced materials. This individual shall also be familiar with and comply with all applicable industry and governmental standards and regulations pertaining to the task in question.

SAFETY SYMBOLS

The following symbols are used in this document to alert the reader to specific situations:

DANGER

Indicates a possible hazardous situation which will result in death or serious injury if proper care is not taken.

CAUTION

Identifies a hazard which could lead to damage to the machine, damage to other equipment and/or environmental pollution if proper care is not taken or instructions and are not followed.

WARNING

Indicates a potentially hazardous situation which will result in possible injuries or damage to equipment if proper care is not taken.

NOTE

Highlights additional information useful to the technician in completing the work being performed properly.

WARNING

External wiring, unless specified as an optional connection in the manufacturer's product line, is not to be connected inside the control cabinet. Devices such as relays, switches, transducers and controls and any external wiring must not be installed inside the micro panel. All wiring must be in accordance with Johnson Controls' published specifications and must be performed only by a qualified electrician. Johnson Controls will NOT be responsible for damage/problems resulting from improper connections to the controls or application of improper control signals. Failure to follow this warning will void the manufacturer's warranty and cause serious damage to property or personal injury.

CHANGEABILITY OF THIS DOCUMENT

In complying with Johnson Controls' policy for continuous product improvement, the information contained in this document is subject to change without notice. Johnson Controls makes no commitment to update or provide current information automatically to the manual or product owner. Updated manuals, if applicable, can be obtained by contacting the nearest Johnson Controls Service office or accessing the Johnson Controls QuickLIT website at http://cgproducts.johnsoncontrols.com.

It is the responsibility of rigging, lifting, and operating/service personnel to verify the applicability of these documents to the equipment. If there is any question regarding the applicability of these documents, rigging, lifting, and operating/service personnel should verify whether the equipment has been modified and if current literature is available from the owner of the equipment prior to performing any work on the chiller.

CHANGE BARS

Revisions made to this document are indicated with a line along the left or right hand column in the area the revision was made. These revisions are to technical information and any other changes in spelling, grammar or formatting are not included.

HOW TO USE RENEWAL PARTS MANUALS

Johnson Controls offers an assortment of replacements parts for Johnson Controls, YORK and UPG units. Each replacement part is manufactured and fitted for a specific model. This Replacement Parts Manual is for standard Johnson Controls units. Chiller units built with special options, modifications, or conversions are not covered in this manual.

This Replacement Parts Manual provides Johnson Controls chiller replacement parts by part numbers, descriptions, quantities and drawing figures. To determine the correct replacement part, locate the item on drawing figure and refer to the parts list for the part number, description and quantity.

NOTE: Provide a unit model number, unit serial number and part number when requesting a quotation or placing an order. Failure to include this information may delay processing of your request.

Model and Serial Number Locations:

- **Unit -** Namplate on side of Control Panel
- **Compressor -** Namplate on Compressor Housing
- **VSD -** Namplate on VSD Panel

Contact the following sources to order parts.

NORTH AMERICA

Baltimore Parts Center
Contrators within USA
Telephone: (800)-932-1701
Equipment Owners within USA who maintain their own equipment
Telephone: (800)-482-2778

Email: cg-baltimore-parts-customer@jci.com

For parts availability and ordering YORK HVAC Parts within the USA please use the following link: http://www.johnsoncontrols.com/content/us/en/products/building_efficiency/products-and-systems/integrated_hvac_systems/parts_center/baltimorepartscenter.html

EUROPE

HVAC Parts Centre (Europe)
Telephone: +44 (0) 1268 246 400
Email: ALLParts@jci.com

UNIT NOMENCLATURE NAMEPLATE ENGINEERING DATA

BASIC PART NUMBER

YLAA0091SE46XAA

1 2 3 4 BASE PRODUCT TYPE
- Y
- L
- A
- A : YORK : Chiller : Air Cooled : Scroll

5 6 7 8 NOMINAL CAPACITY
- # # # #
- Tons: 0070, 0080, 0090, 0091, 0101, 0115, 0120, 0135, 0150, 0155

9 UNIT DESIGNATOR
- S Standard Efficiency
- H High Efficiency
- R Heat Pump
- Y Standard Efficiency (Round Tube)
- Z High Efficiency (Round Tube)

10 REFRIGERANT
- E :R-410A

11 12 13 VOLTAGE/STARTER
- 1 7 :200/3/60
- 2 8 :230/3/60
- 4 0 :380/3/60
- 4 6 :460/3/60
- 5 0 :380-415/3/50
- 5 8 :575/3/60
- X :Across the Line

14 15 DESIGN/DEVELOPMENT LEVEL
- A :Design Series A
- B :Design Series B
- A :Engineering Change or PIN Level

PART NUMBER – LETTER CODES

16 17 18 19 POWER FIELD
- X X : MP Terminal Block
- S X : SP Terminal Block
- S D : SP NF Disconnect Switch
- B X : SP Circuit Breaker
- D B : SP NF Disc Sw w/ Ind. Sys. CB
- M X : MP TB w/ Ind. Sys. CB
- M D : MP NF Disconnect Switch
- X : No Transformer Required
- T : Transformer 115/24V (factory)
- Q : Special Transformer Required
- X : No Power Factor Capacitor
- C : Power Factor Capacitor
- Q : Special Power Factor Capacitor

MP = Multiple Point
SP = Single Point
NF = Non-Fused
TB = Terminal Block
CB = Circuit Breaker

20 21 22 23 24 25 26 27 28 CONTROLS FIELD
- X
- L
- H
- A
- T
- S
- F
- G
- I
- H
- L
- P
- B
- L
- C
- C
- O
- S
- : No Ambient Kit
- : Low Ambient Kit (factory)
- : High Ambient Kit (factory)
- : High & Low Ambient Kit (factory)
- : BAS/EMS Temp. Reset / Offset
- : Spanish LCD & Keypad Display
- : French LCD & Keypad Display
- : German LCD & Keypad Display
- : Italian LCD & Keypad Display
- : Hungarian LCD & Keypad Display
- : Polish LCD & Keypad Display
- : Portuguese LCD & Keypad Display
- : Both Disc & Suct Transducer Readout
- : N. American Safety Code (cUL/cETL)
- : European Safety Code (CE)
- : Motor Current Module
- : OptiView Remote Panel
- : Sequence Control & Automatic Lead Transfer

29 30 31 32 33 34 35 36 37 COMPRESSOR / PIPING FIELD
- # #
- C :Chicago Relief Code
- S :Service Isolation Valve
- B :Both Chicago & Isolat.
- 1 :Hot Gas By-Pass (# circuits)
- H :Heater (Standard)
- :Low Temp. Brine (LBrT)

38 39 40 41 42 43 44 EVAP. FIELD
- X :150# PSI DWP
- 3 :300# PSI DWP
- D :Double Thick Insulation
- V :Victaulic Flange
- S :One Flow Switch
- T :Two Flow Switches
- U :Three Flow Switches
- D :One Diff. Press. Switch
- E :Two Diff. Press. Switches
- F :Three Diff. Press. Switches
- A :ASME Press Vessel Codes
- E :PED Press Vessel Codes
- R :Remote Cooler

45 46 47 CONDENSER FIELD
- X : Aluminum
- C : Copper
- B : Black Fin
- P : Phenolic
- X : TEAO Fan Motors

48 49 50 51 52 53 54 CABINET FIELD
- 1 : Wire (Full Unit) Encl. Panels (factory)
- 3 : Wire/Louvered Encl. Panels (factory)
- 5 : Louvered (Cond. Only) Encl. Panels (factory)
- 7 : Louvered (Full Unit) Encl. Panels (factory)
- 9 : End Louver (Hail Guard) Enc. Panels (factory)
- B : Acoustic Sound Blanket
- E : Acoustic Enclosure
- L : Ultra Quiet Fans
- G : High Airflow Fans
- H : High Static Fans
- T : Two Speed Fans
- 1 : 1" Deflection
- S : Seismic
- N : Neoprene Pads

61 PLANT OF MANUFACTURE
- R : Monterrey
- S : Sabadell
- CUR : Curitiba, Brazil
- MEX : Mexico, ES
- MTY : Monterrey. BE
- SAT : San Antonio, Texas

NOTES:
1. Q :DENOTES SPECIAL / S.Q.
2. # :DENOTES STANDARD
3. X :w/in OPTIONS FIELD, DENOTES NO OPTION SELECTED
4. Agency Files (i.e. U.L. / ETL; CE; ARI; ETC.) will contain info. based on the first 14 characters only.
5. Plant of manufacture to include PIN 56 upon entering the chiller order.

LIST OF TABLES

TABLE 1 - Evaporator Components - 150 PSIG 7
TABLE 2 - Microchannel Condenser Coil Components - Design Series "A" 10
TABLE 3 - Condenser Coil Components - Design Series "B" 12
TABLE 4 - Fan Components 14
TABLE 5 - Refrigerant Piping Components 15
TABLE 6 - Hot Gas By-Pass Components 18
TABLE 7 - Compressor Part Numbers - R-410A 19
TABLE 8 - Recommended Compressor Oil Type 22
TABLE 9 - Compressor Heater And Sound Blanket Part Numbers 22
TABLE 10 - Compressor Components 22
TABLE 11 - Control Panel And Power Panel Identifiers 24
TABLE 12 - Power Panel Components - YLAA0070 28
TABLE 13 - Power Panel Components - YLAA0080 29
TABLE 14 - Power Panel Components - YLAA0090 30
TABLE 15 - Power Panel Components - YLAA0091 31
TABLE 16 - Power Panel Components - YLAA0100 & YLAA0101 32
TABLE 17 - Power Panel Components - YLAA0115 33
TABLE 18 - Power Panel Components - YLAA0135 & YLAA0141 34
TABLE 19 - Power Panel Components - YLAA0120 & YLAA0125 35
TABLE 20 - Power Panel Components YLAA0150 36
TABLE 21 - Power Panel Components - YLAA0155 & YLAA0156 37
TABLE 22 - Power Panel Components - YLAA0170 & YLAA0175 38
TABLE 23 - Lug Kits (Circuit Breaker Or Non-Fused Disconnect Switch) 39
TABLE 24 - Power Panel Fuse Table 39
TABLE 25 - Control Panel Components 41
TABLE 26 - Sensor Harness Wiring - YLAA0070, 0080, 0090, 0101, 0135, 0150 & YLAAA0155 42
TABLE 27 - Sensor Harness Wiring - YLAA0091, 0115 & YLAAA0120 42
TABLE 28 - Transducers, Pressure Cutouts And Temp Sensors 45
TABLE 29 - Transducer And Thermistor Wire Harness Connectors - Field Replacement Part Numbers 46
TABLE 30 - Vibration Isolators Part Numbers 47
TABLE 31 - Field Installed Options Part Numbers 48
TABLE 32 - Control Transformer Kit 48
TABLE 33 - Enclosure Kit Options 49
TABLE 34 - Wire Enclosure 50
TABLE 35 - Louvered Enclosure 51
TABLE 36 - Recommended Spare Parts - YLAA0070-YLAA0175 Chillers 52

LIST OF FIGURES

FIGURE 1 - Evaporator Components....9
FIGURE 2 - Microchannel Condenser Coil Components - Design Series "A"....10
FIGURE 3 - Microchannel Condenser Coil Components - Design Series "A"....11
FIGURE 4 - Condenser Coil Components Design Series "B" - YLAA0091, YLAA0101, YLAA0115 & YLAA0120 Shown....13
FIGURE 5 - Fan Components....14
FIGURE 6 - Refrigerant Piping Components - Models YLAA0070, YLAA0080 & YLAA0090 Shown....17
FIGURE 7 - Hot Gas By-Pass Components....18
FIGURE 8 - Compressor Layouts....21
FIGURE 9 - Compressor....22
FIGURE 10 - Panel Door Lock And Key....23
FIGURE 11 - Panel Part Number Sticker....26
FIGURE 12 - Power Panel Components....27
FIGURE 13 - Control Panel Components....40
FIGURE 14 - Control Panel Components....41
FIGURE 15 - Harness Layout....43
FIGURE 16 - Harness Layout....44
FIGURE 17 - Sensor Housing & Pin Socket Part Numbers....44
FIGURE 18 - Transducers, Pressure Cutouts And Temp Sensors....45
FIGURE 19 - Transducer And Thermistor Wire Harness Connectors - Field Replacement Part Numbers....46
FIGURE 20 - Wire Enclosure - Models YLAA0070, YLAA0080 & YLAA0090 Shown....50
FIGURE 21 - Louvered Enclosure....51

EVAPORATOR COMPONENTS

TABLE 1 - EVAPORATOR COMPONENTS - 150 PSIG

ITEM	QUANTITY	DESCRIPTION	DWP	YLAA0070	YLAA0080	FIGURE
1	1	Cooler, Fully Insulated with Heater	ALL	375-75061-001	375-75064-001	1
		Cooler, less Heater & Insulation		375-75062-000	375-75065-000	1
2	1	Head, Connection End	ALL	375-71203-000	375-67289-000	1
3	1	Head, Back End	ALL	075-71205-000	075-65741-003	1
4	1	Baffle, Connection End	ALL	375-71206-000	375-67287-000	1
5	1	Baffle, Back End	ALL	375-71208-000	375-67288-000	1
6	8	Gasket, Baffle and Head	ALL	075-71210-000	075-65741-004	1
7	1	Heater, Cooler 180 Watt	ALL	025-22690-000	025-22690-000	1
	1	Heater, Cooler 280 Watt		025-22691-000	025-22691-000	1
9	2	Well, Thermo	ALL	026-32328-000	026-32328-000	1
10	-	Insulation (3/4"x49"x65")	ALL	010-05997-000	010-05997-000	1
	-	Insulation (1 1/2"x49"x65")		010-05998-000	010-05998-000	1
11	2	Sensor, Water Temperature	ALL	025-47669-000	025-47669-000	1
12	1	Adhesive (Use with #6)	ALL	013-03311-000	031-03311-000	1

ITEM	QUANTITY	DESCRIPTION	DWP	YLAA0090	YLAA0091, 0100, 0101, 0115 AND YLAA0125	FIGURE
1	1	Cooler, Fully Insulated with Heater	ALL	375-75058-001	375-75055-001	1
		Cooler, less Heater & Insulation		375-75059-000	375-75056-000	1
2	1	Head, Connection End	ALL	375-67628-000	375-71454-000	1
3	1	Head, Back End	ALL	075-67624-002	075-71457-000	1
4	1	Baffle, Connection End	ALL	375-67626-000	375-71458-000	1
5	1	Baffle, Back End	ALL	075-67627-000	375-71460-000	1
6	4	Gasket, Baffle and Head	ALL	075-67624-003	075-71467-000	1
7	1	Heater, Cooler 180 Watt	ALL	025-22690-000	025-22690-000	1
	1	Heater, Cooler 280 Watt		025-22691-000	025-22691-000	1
9	2	Well, Thermo	ALL	026-32328-000	026-32328-000	1
10	-	Insulation (3/4"x49"x65")	ALL	010-05997-000	010-05997-000	1
	-	Insulation (1 1/2"x49"x65")		010-05998-000	010-05998-000	1
11	2	Sensor, Water Temperature	ALL	025-47669-000	025-47669-000	1
12	1	Adhesive (Use with #6)	ALL	013-03311-000	031-03311-000	1

EVAPORATOR COMPONENTS (CONT'D)

TABLE 1 - EVAPORATOR COMPONENTS - 150 PSIG (CONT'D)

ITEM	QUANTITY	DESCRIPTION	DWP	YLAA0120, 0141 AND YLAA0155	YLAA0135, 0150, 0156 AND YLAA0170	FIGURE
1	1	Cooler, Fully Insulated with Heater	ALL	375-75067-001	375-74998-001	1
		Cooler, less Heater & Insulation		375-75068-000	375-74999-000	1
2	1	Head, Connection End	ALL	375-72131-000	375-75006-000	1
3	1	Head, Back End	ALL	075-72132-001	075-75010-000	1
4	1	Baffle, Connection End	ALL	375-71834-000	375-75002-000	1
5	1	Baffle, Back End	ALL	075-72130-000	375-75004-000	1
6	8	Gasket, Baffle and Head	ALL	075-72133-000	075-49360-000	1
7	1	Heater, Cooler 180 Watt	ALL	025-22690-000	025-22690-000	1
	1	Heater, Cooler 280 Watt		025-22691-000	025-22691-000	1
9	2	Well, Thermo	ALL	026-32328-000	026-32328-000	1
10	-	Insulation (3/4"x49"x65")	ALL	010-05997-000	010-05997-000	1
	-	Insulation (1 1/2"x49"x65")		010-05998-000	010-05998-000	1
11	2	Sensor, Water Temperature	ALL	025-47669-000	025-47669-000	1
12	1	Adhesive (Use with #6)	ALL	013-03311-000	031-03311-000	1

ITEM	QUANTITY	DESCRIPTION	DWP	YLAA0175	FIGURE
1	1	Cooler, Fully Insulated with Heater	ALL	375-76135-001	1
		Cooler, less Heater & Insulation		375-76136-000	1
2	1	Head, Connection End	ALL	375-67887-000	1
3	1	Head, Back End	ALL	075-67892-002	1
4	1	Baffle, Connection End	ALL	375-67888-000	1
5	1	Baffle, Back End	ALL	375-67891-000	1
6	8	Gasket, Baffle and Head	ALL	075-84276-000	1
7	2	Heater, Cooler 280 Watt	ALL	025-22691-000	1
9	2	Well, Thermo	ALL	026-32328-000	1
10	-	Insulation (3/4"x49"x65")	ALL	010-05997-000	1
	-	Insulation (1 1/2"x49"x65")		010-05998-000	1
11	2	Sensor, Water Temperature	ALL	025-47669-000	1
12	1	Adhesive (Use with #6)	ALL	013-03311-000	1
12	1	Adhesive (Use with #6)	ALL	013-03311-000	1

EVAPORATOR COMPONENTS (CONT'D)

Service Note:
Pin location 38 in Model Number will be "X" for 150# DWP Cooler .
Pin location 38 in Model Number will be "3" for 300# DWP Cooler

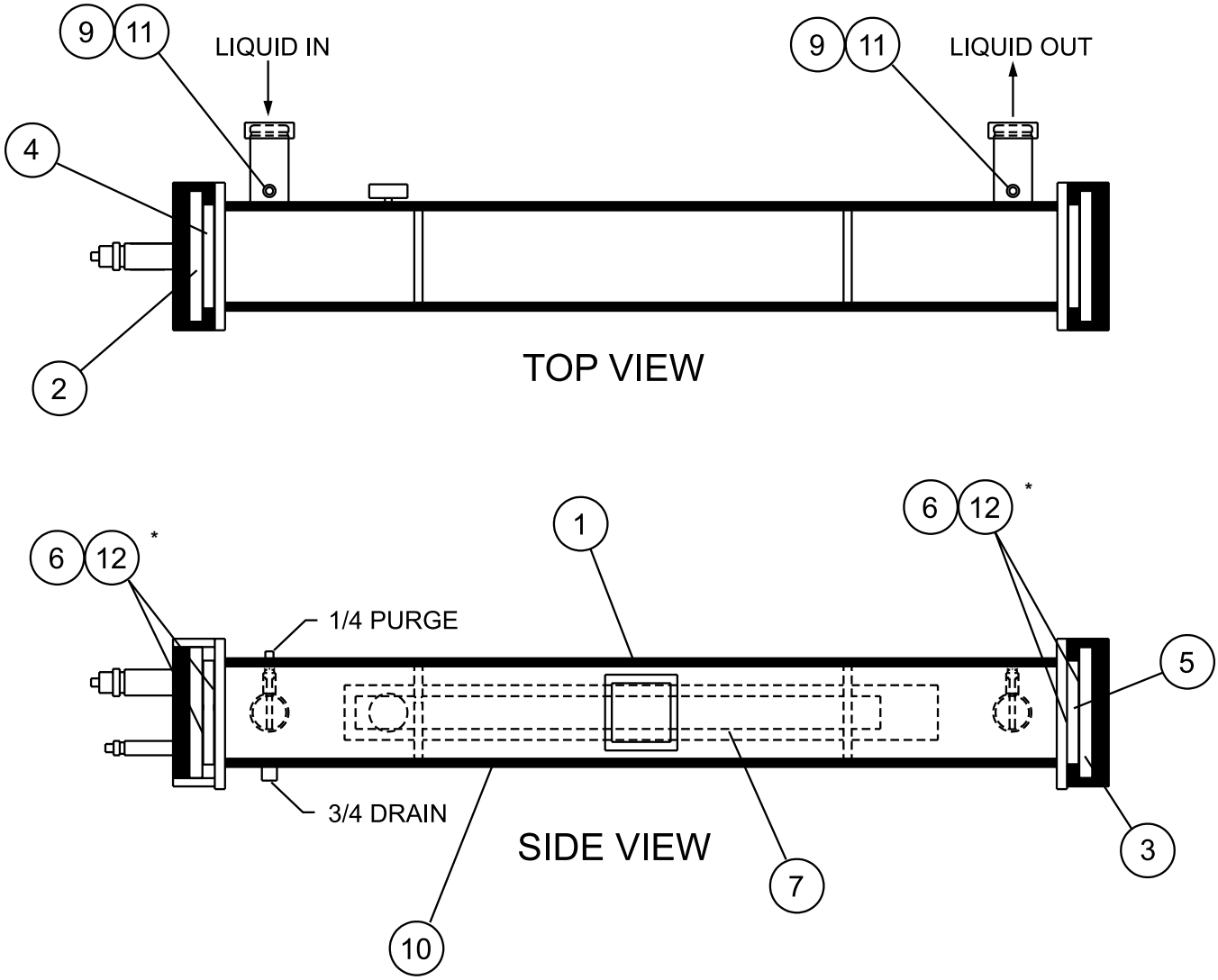

* Service Note: Torque 55 ft. lbs.
± 5 ft. lbs

30968-000

FIGURE 1 - EVAPORATOR COMPONENTS

CONDENSER COIL COMPONENTS
CHILLER MODEL YLAA – DESIGN SERIES "A" OR "C" (MICROCHANNEL)

TABLE 2 - MICROCHANNEL CONDENSER COIL COMPONENTS - DESIGN SERIES "A"

ITEM	DESCRIPTION	YORK PART NUMBER	QUANTITY	FIGURE
1	Receiver, 6" Diameter	026-45013-000	1	2
2	Coil	026-45535-000	2	2
3	Pipe, Coil To Receiver	075-77930-001	1	3
4	Pipe, Coil To Receiver	075-77930-002	1	3
5	Pipe, Coil To Receiver	075-77930-003	1	3
6	Pipe, Coil To Receiver	075-77930-003	1	3
7	Clamp, Header	075-74862-007	8	3
8	Bushing	028-15821-000	2	2

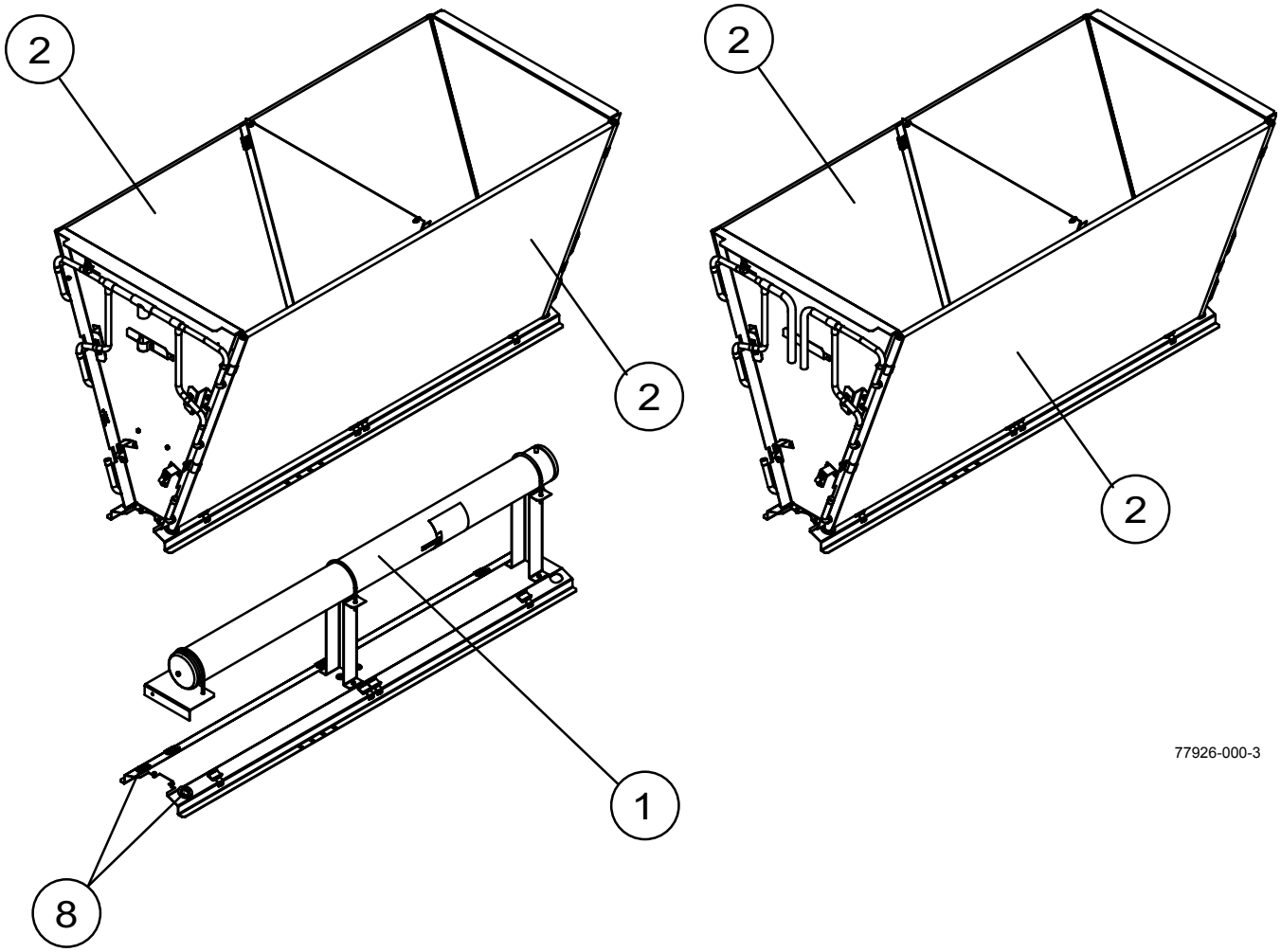

FIGURE 2 - MICROCHANNEL CONDENSER COIL COMPONENTS - DESIGN SERIES "A"

CONDENSER COIL COMPONENTS (CONT'D)
CHILLER MODEL YLAA –DESIGN SERIES "A" OR "C" (MICROCHANNEL)

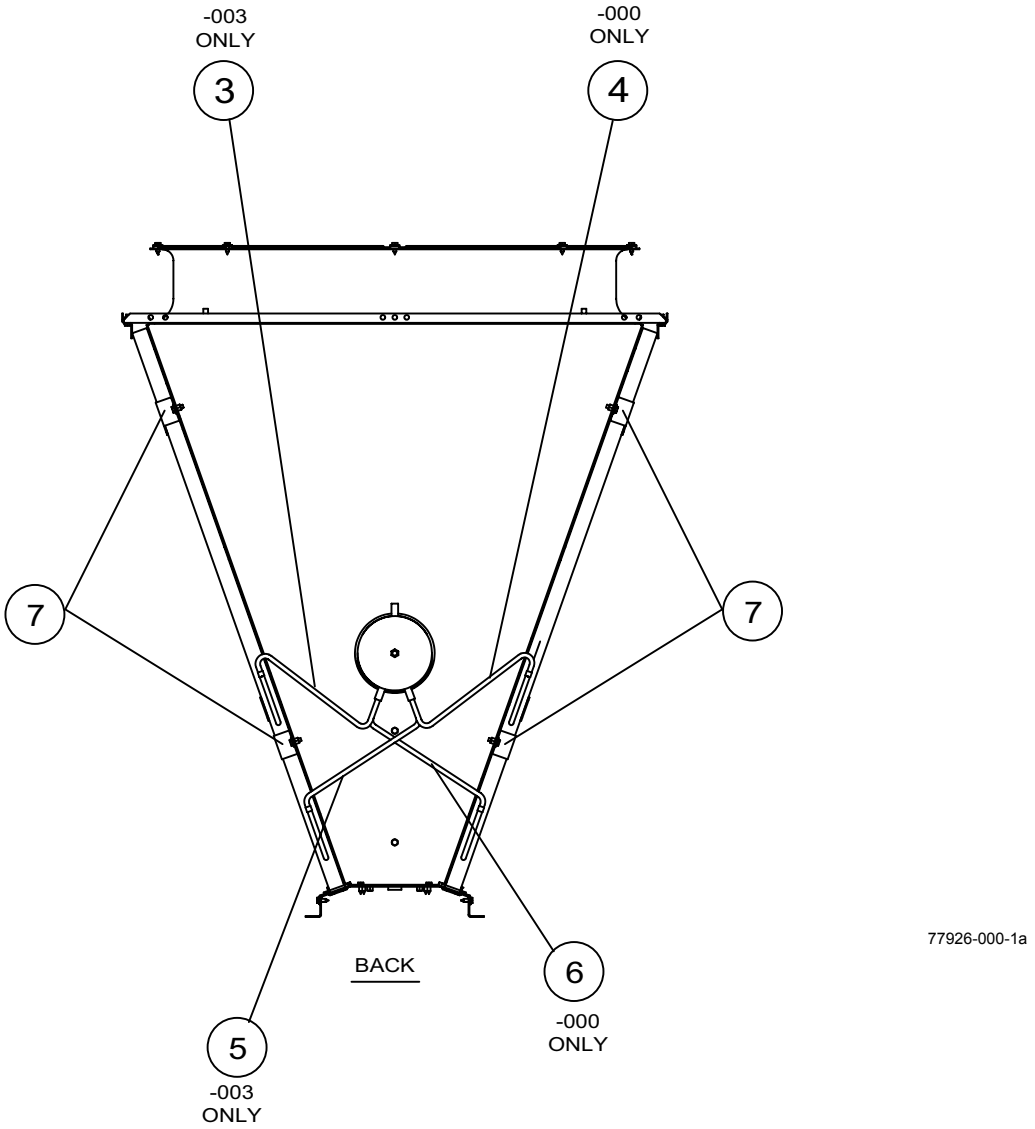

FIGURE 3 - MICROCHANNEL CONDENSER COIL COMPONENTS - DESIGN SERIES "A"

CONDENSER COIL COMPONENTS (CONT'D)
CHILLER MODEL YLAA – DESIGN SERIES "B" (TUBE AND FIN)

TABLE 3 - CONDENSER COIL COMPONENTS - DESIGN SERIES "B"

ITEM	DESCRIPTION	YLAA0070, YLAA0080 AND YLAA0090	YLAA0091, YLAA0115 AND YLAA0120	YLAA0101	YLAA0135, YLAA0150 AND YLAA0155	FIGURE
ALUMINUM FIN COILS - 'PIN 45 = X'						
2	Coil*	375-75763-101 (Qty 2)	375-75763-101 (Qty 3)	375-75763-101 (Qty 3)	375-75763-101 (Qty 4)	4
3		375-75763-102 (Qty 2)	375-75763-102 (Qty 3)	375-75763-102 (Qty 3)	375-75763-102 (Qty 4)	4
BLACK FIN COILS - 'PIN 45 = B'						
2	Coil*	375-75763-105 (Qty 2)	375-75763-105 (Qty 3)	375-75763-105 (Qty 3)	375-75763-105 (Qty 4)	4
3		375-75763-106 (Qty 2)	375-75763-106 (Qty 3)	375-75763-106 (Qty 3)	375-75763-106 (Qty 4)	4
PHENOLIC COILS - 'PIN 45 = P'						
2	Coil*	375-75763-107 (Qty 2)	375-75763-107 (Qty 3)	375-75763-107 (Qty 3)	375-75763-107 (Qty 4)	4
3		375-75763-108 (Qty 2)	375-75763-108 (Qty 3)	375-75763-108 (Qty 3)	375-75763-108 (Qty 4)	4
COPPER COILS - 'PIN 45 = C'						
2	Coil*	375-75763-103 (Qty 2)	375-75763-103 (Qty 3)	375-75763-103 (Qty 3)	375-75763-103 (Qty 4)	4
3		375-75763-104 (Qty 2)	375-75763-104 (Qty 3)	375-75763-104 (Qty 3)	375-75763-104 (Qty 4)	4

***NOTE:** Coils include coil and headers.

CONDENSER COIL COMPONENTS (CONT'D)
CHILLER MODEL YLAA – DESIGN SERIES "B" (TUBE AND FIN)

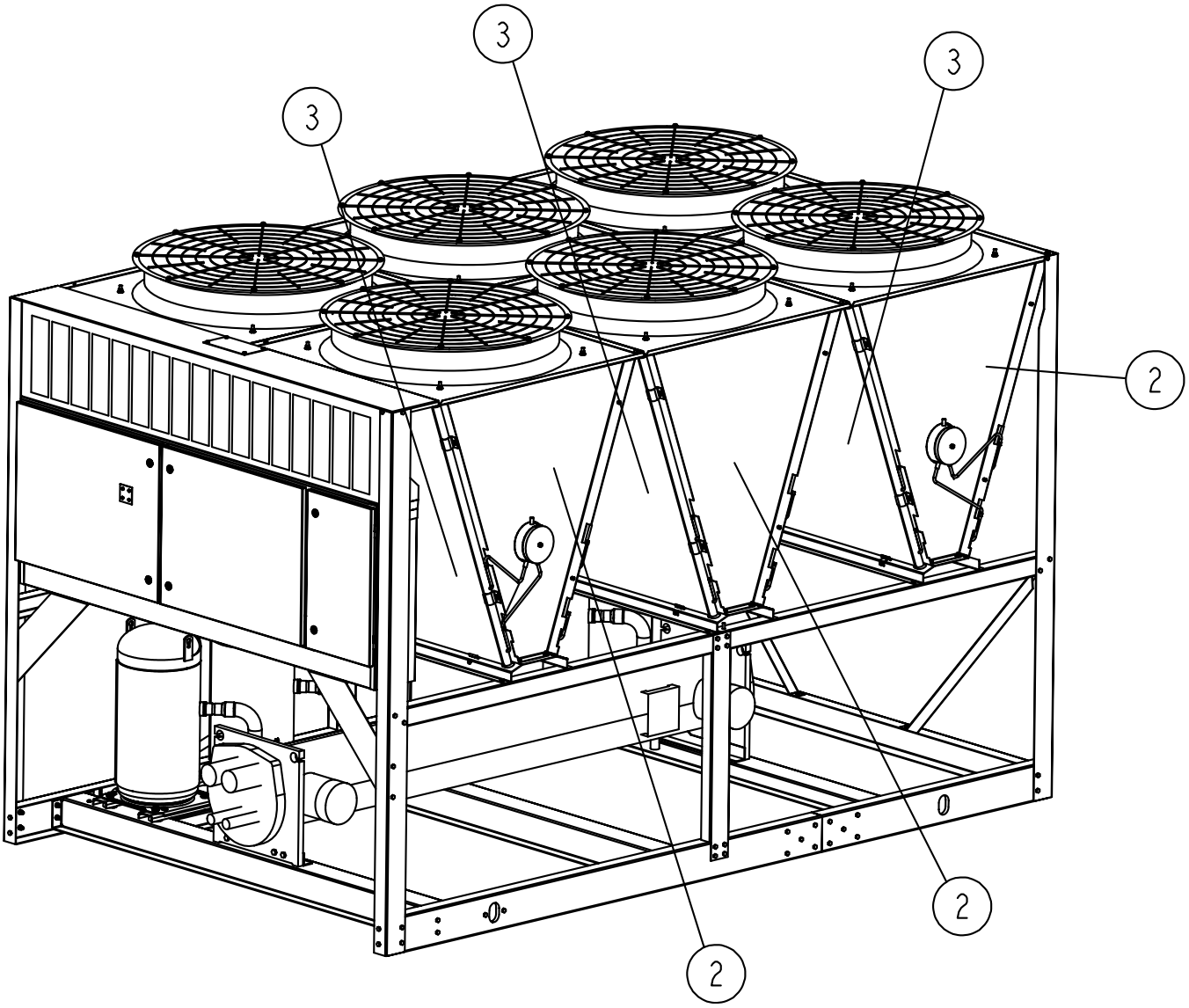

77927-2a

FIGURE 4 - CONDENSER COIL COMPONENTS DESIGN SERIES "B" - YLAA0091, YLAA0101, YLAA0115 & YLAA0120 SHOWN

FAN COMPONENTS

TABLE 4 - FAN COMPONENTS

ITEM	DESCRIPTION	VOLTAGE CODE	FAN TYPE		FIGURE
			STANDARD 7/8", 1160 RPM	LOW NOISE 7/8", 850 RPM	
1[S]	Motor, Fan 2 HP (YLAA0070-YLAA0175)	-17	024-36873-103	024-34980-102	5
		-28	024-36873-106	024-34980-102	
		-40	024-36873-104	024-34980-105	
		-46	024-36873-107	024-34980-101	
		-58	024-36873-102	024-34980-104	
2[S]	Blade	All	026-41594-000	026-41942-000	5
3	Guard	All	026-35605-000		5
4	Orifice	All	026-45002-000		5
5	Support	All	026-41937-000	026-45533-000	5
6	Support, Ring	All	026-36367-000		5
7	Screw, Cap (M8x125)	All	021-18494-000		5
8	Spacer	All	075-40484-000		5
9	Hub, Square	All	026-41939-002	026-41939-005	5

[S] = Recommended Spare Parts

Service Note: Fan Hub to Shaft Joint should be sealed with protective coating - use RUST VETO 344 - a solvent type, rust preventative coating.

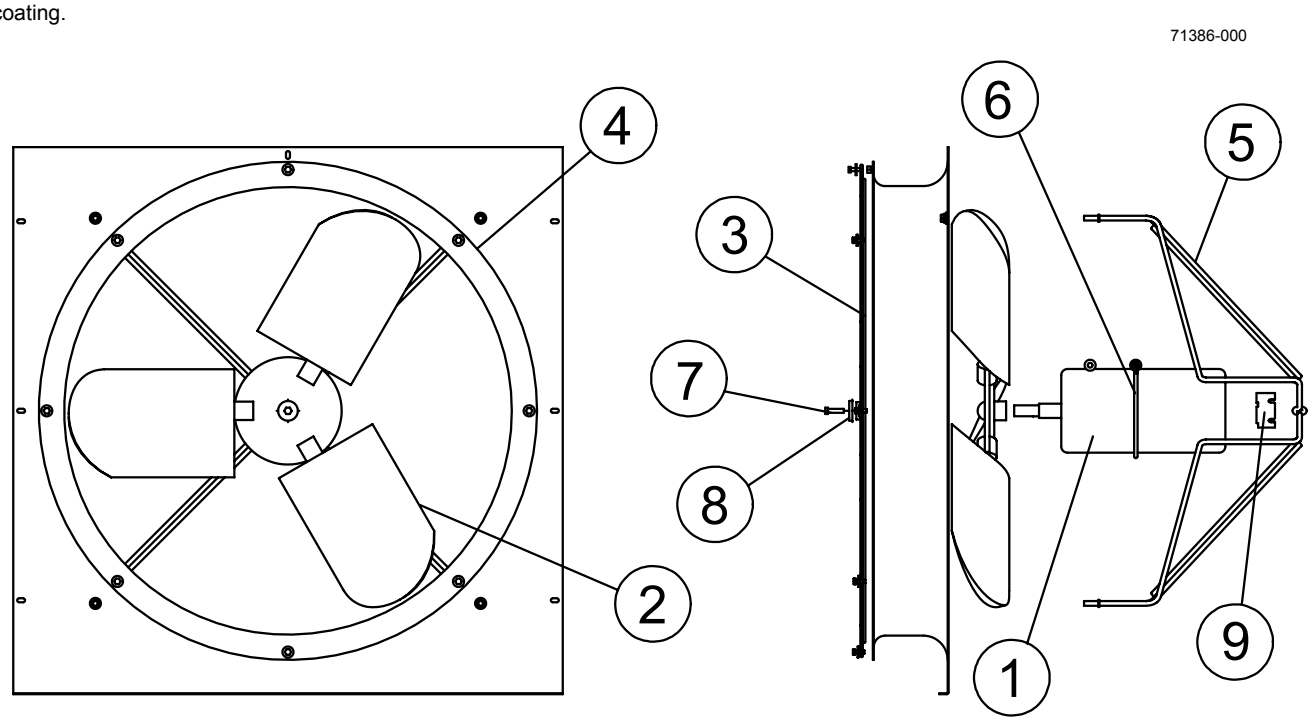

Service Note: Pin Location 52 in Model Number will be “X” for Standard Fan, or “L” for Low Noise Fan. See page 4.

FIGURE 5 - FAN COMPONENTS

REFRIGERANT PIPING COMPONENTS
CHILLER MODEL YLAA – DESIGN SERIES "A", "B" & "C"

TABLE 5 - REFRIGERANT PIPING COMPONENTS

ITEM	SYS.	DESCRIPTION	YLAA0070	YLAA0080	YLAA00090	FIGURE
105	Both	Valve, Ball (Discharge)	022-08883-000	022-08883-000	022-08883-000	6
112[S]	1	Valve, Thermal Expansion	025-40666-000	025-40666-000	025-40681-000	6
113[S]	2	Valve, Thermal Expansion	025-40666-000	025-40681-000	025-40681-000	6
114	Both	Moisture Indicator	026-14125-000	026-14125-000	026-14125-000	6
115	Both	Valve, Liquid Stop	022-10022-000	022-10022-000	022-10022-000	6
116	Both	Valve, Solenoid	025-41743-000	025-41743-000	025-41743-000	6
118	Both	Dehydrator, Body	026-43984-002	026-43984-002	026-43984-002	6
119[S]	Both	Core, Dehydrator	026-37540-000	026-37540-000	026-37540-000	6
122	Both	Valve, Angle Stop	022-03836-000	022-03836-000	022-03836-000	6
123	Both	Valve, Charging	022-09754-000	022-09754-000	022-09754-000	6
141	Both	Valve, Ball (Suction)	022-09753-000	022-09753-000	022-09753-000	6
148	Both	Valve, Transducer	022-11735-000	022-11735-000	022-11735-000	6
200	Both	Valve, Relief (400 psi)	022-11704-000	022-11704-000	022-11704-000	6
201	Both	Tube, Relief	375-37978-000	375-37978-000	375-37978-000	6
202	All	Valve, Relief (650 psi)	022-10682-001	022-10682-001	022-10682-001	6
203	All	Tube, Relief	375-37975-000	375-37975-000	375-37975-000	6

ITEM	SYS.	DESCRIPTION	YLAA0091	YLAA0100 AND YLAA0101	YLAA0115, 0120 AND YLAA0125	FIGURE
105	Both	Valve, Ball (Discharge)	022-08883-000	022-08883-000	022-08883-000	6
112[S]	1	Valve, Thermal Expansion	025-40681-000	025-40681-000	025-40900-008	6
113[S]	2	Valve, Thermal Expansion	025-40681-000	025-40900-008	025-40900-008	6
114	Both	Moisture Indicator	026-14125-000	026-14125-000	026-14125-000	6
115	Both	Valve, Liquid Stop	022-10022-000	022-10022-000	022-10022-000	6
116	Both	Valve, Solenoid	025-41743-000	025-41743-000	025-41743-000	6
118	Both	Dehydrator, Body	026-43984-002	026-43984-002	026-43984-002	6
119[S]	Both	Core, Dehydrator	026-37540-000	026-37540-000	026-37540-000	6
122	Both	Valve, Angle Stop	022-03836-000	022-03836-000	022-03836-000	6
123	Both	Valve, Charging	022-09754-000	022-09754-000	022-09754-000	6
141	Both	Valve, Ball (Suction)	022-09753-000	022-09753-000	022-09753-000	6
148	Both	Valve, Transducer	022-11735-000	022-11735-000	022-11735-000	6
200	Both	Valve, Relief (400 psi)	022-11704-000	022-11704-000	022-11704-000	6
201	Both	Tube, Relief	375-37978-000	375-37978-000	375-37978-000	6
202	All	Valve, Relief (650 psi)	022-10682-001	022-10682-001	022-10682-001	6
203	All	Tube, Relief	375-37975-000	375-37975-000	375-37975-000	6

REFRIGERANT PIPING COMPONENTS (CONT'D)
CHILLER MODEL YLAA – DESIGN SERIES "A", "B" & "C"

TABLE 5 - REFRIGERANT PIPING COMPONENTS (CONT'D)

ITEM	SYS.	DESCRIPTION	YLAA0135	YLAA0141, 0150, 0155 AND YLAA0156	YLAA0170 AND YLAA0175	FIGURE
105	1	Valve, Ball (Discharge)	022-08883-000	022-08883-000	022-09752-000	6
	2		022-09752-000	022-09752-000		
112[s]	1	Valve, Thermal Expansion	025-40900-004	025-40900-004	025-40900-004	6
113[s]	2		025-40681-000	025-40900-008		
114	1	Moisture Indicator	026-14125-000	026-14125-000	026-20574-000	6
	2		026-20574-000	026-20574-000		
115	1	Valve, Liquid Stop	022-10022-000	022-10022-000	022-09778-000	6
	2		022-09778-000	022-09778-000		
116	1	Valve, Solenoid	025-41743-000	025-41743-000	025-42090-000	6
	2		025-42090-000	025-42090-000		
118	1	Dehydrator, Body	026-43984-002	026-43984-002	026-43984-003	6
	2		026-43984-003	026-43984-003		
119[s]	Both	Core, Dehydrator	026-37540-000	026-37540-000	026-37540-000	6
122	Both	Valve, Angle Stop	022-03836-000	022-03836-000	022-03836-000	6
123	Both	Valve, Charging	022-09754-000	022-09754-000	022-09754-000	6
141	1	Valve, Ball (Suction)	022-09753-000	022-09753-000	022-11325-000	6
	2		022-11325-000	022-11325-000		
148	Both	Valve, Transducer	022-11735-000	022-11735-000	022-11735-000	6
200	Both	Valve, Relief (400 psi)	022-11704-000	022-11704-000	022-11704-000	6
201	Both	Tube, Relief	375-37978-000	375-37978-000	375-37978-000	6
202	All	Valve, Relief (650 psi)	022-10682-001	022-10682-001	022-10682-001	6
203	All	Tube, Relief	375-37975-000	375-37975-000	375-37975-000	6

[S] = Recommended Spare Parts

REFRIGERANT PIPING COMPONENTS (CONT'D)
CHILLER MODEL YLAA – DESIGN SERIES "A", "B" & "C"

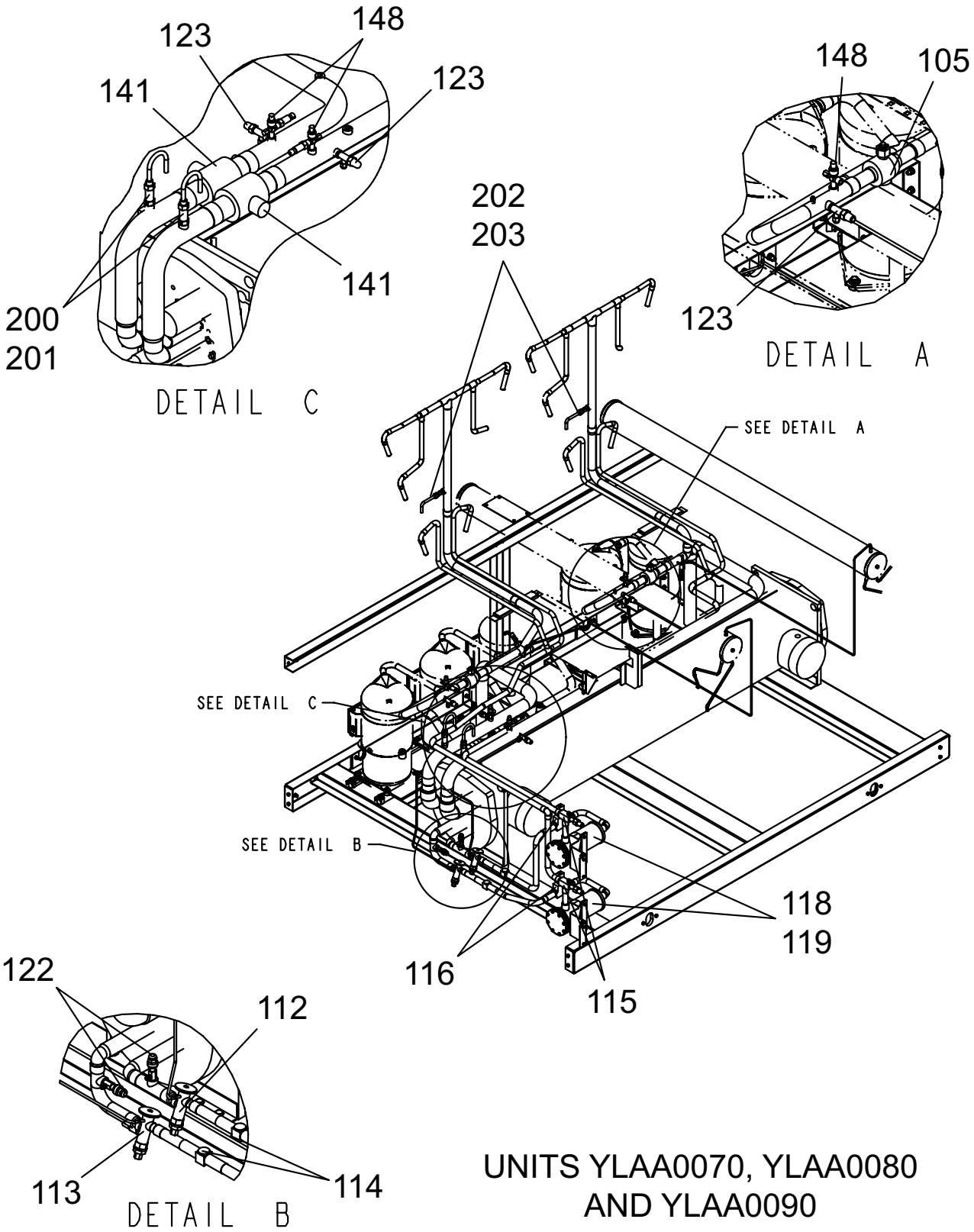

FIGURE 6 - REFRIGERANT PIPING COMPONENTS - MODELS YLAA0070, YLAA0080 & YLAA0090 SHOWN

REFRIGERANT PIPING COMPONENTS (CONT'D)
CHILLER MODEL YLAA – DESIGN SERIES "A", "B" & "C"

TABLE 6 - HOT GAS BY-PASS COMPONENTS

ITEM	MODEL	DESCRIPTION	PART NUMBER	QUANTITY	FIGURE
7	All	Valve, Stop	022-03836-000	1	7
9		Valve, Hot Gas	025-40962-000	1	7
11		Valve, Solenoid	025-41558-000	1	7
18		Valve, Ball	022-11742-000	1	7

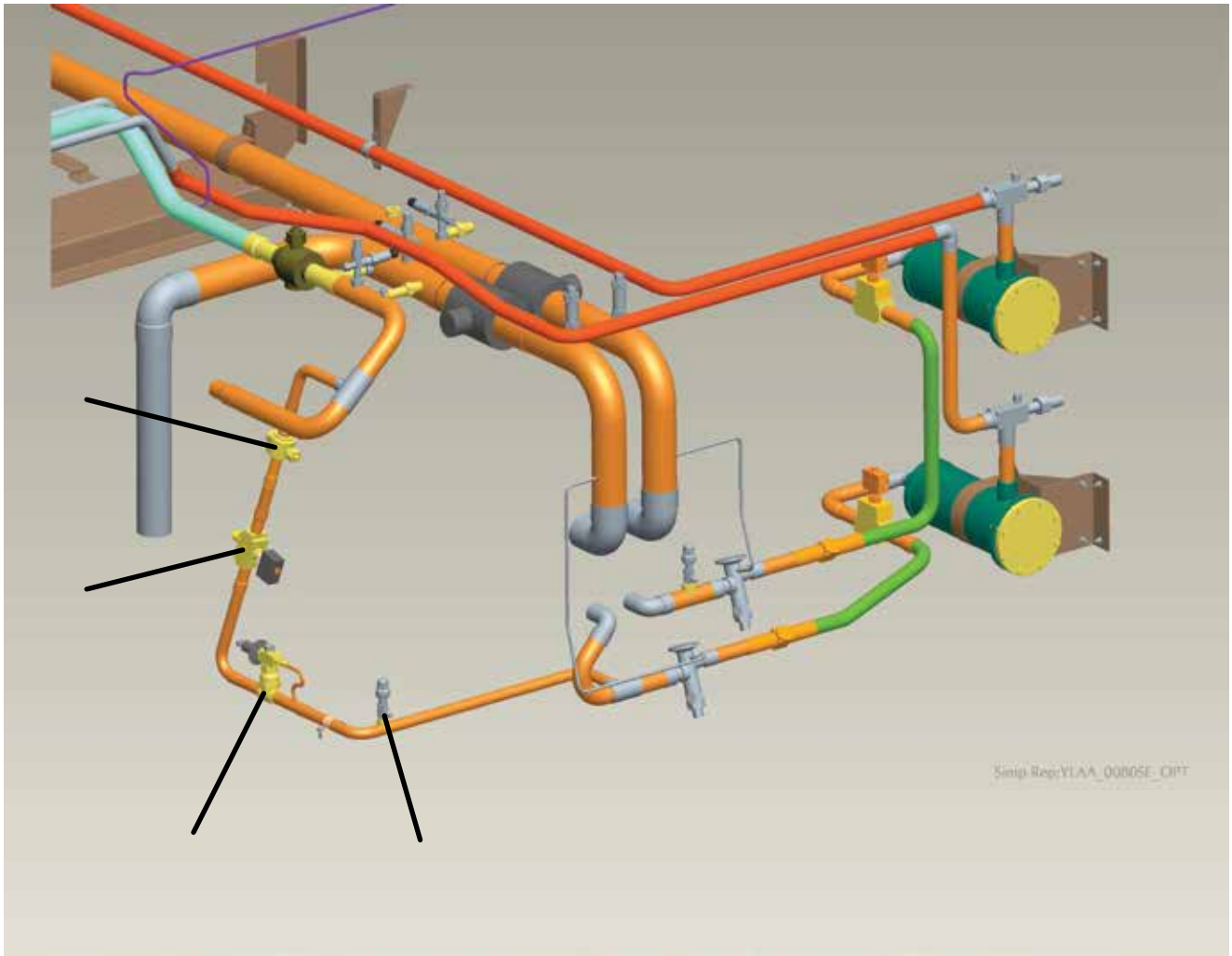

76061-000-2

FIGURE 7 - HOT GAS BY-PASS COMPONENTS

COMPRESSOR

TABLE 7 - COMPRESSOR PART NUMBERS - R-410A

MODEL	VOLTAGE CODE	SYSTEM #1 COMPRESSOR			SYSTEM #2 COMPRESSOR					
		PART #	MODEL #	QTY	PART #	MODEL #	QTY	PART #	MODEL #	QTY
YLAA0070	-17	015-04055-101	ZP154KCE	3	015-04055-101	ZP154KCE	3	N/A	N/A	N/A
	-28	015-04055-101		3	015-04055-101		3			
	-40	015-04055-102		3	015-04055-102		3			
	-46	015-04055-104		3	015-04055-104		3			
	-58	015-04055-105		3	015-04055-105		3			
YLAA0080	-17	015-04045-101	ZP180KCE	3	015-04055-101	ZP154KCE	3	N/A	N/A	N/A
	-28	015-04045-101		3	015-04055-101		3			
	-40	015-04045-102		3	015-04055-102		3			
	-46	015-04045-104		3	015-04055-104		3			
	-58	015-04045-105		3	015-04055-105		3			
YLAA0090	-17	015-04045-101	ZP180KCE	3	015-04052-101	ZP385KCE	1	015-04045-101	ZP180KCE	1
	-28	015-04045-101		3	015-04052-101		1	015-04045-101		1
	-40	015-04045-102		3	015-04052-102		1	015-04045-102		1
	-46	015-04045-104		3	015-04052-104		1	015-04045-104		1
	-58	015-04045-105		3	015-04052-105		1	015-04045-105		1
YLAA0091	-17	015-04052-101	ZP385KCE	2	015-04045-101	ZP180KCE	2	N/A	N/A	N/A
	-28	015-04052-101		2	015-04045-101		2			
	-40	015-04052-102		2	015-04045-102		2			
	-46	015-04052-104		2	015-04045-104		2			
	-58	015-04052-105		2	015-04045-105		2			
YLAA0100 AND YLAA0101	-17	015-04045-101	ZP180KCE	3	015-04052-101	ZP385KCE	2	N/A	N/A	N/A
	-28	015-04045-101		3	015-04052-101		2			
	-40	015-04045-102		3	015-04052-102		2			
	-46	015-04045-104		3	015-04052-104		2			
	-58	015-04045-105		3	015-04052-105		2			

COMPRESSOR (CONT'D)

TABLE 7 - COMPRESSOR PART NUMBERS - R-410A (CONT'D)

MODEL	VOLTAGE CODE	SYSTEM #1 COMPRESSOR			SYSTEM #2 COMPRESSOR					
		PART #	MODEL #	QTY	PART #	MODEL #	QTY	PART #	MODEL #	QTY
YLAA0115	-17	015-04052-101	ZP385KCE	2	015-04052-101	ZP385KCE	2	N/A	N/A	N/A
	-28	015-04052-101		2	015-04052-101		2			
	-40	015-04052-102		2	015-04052-102		2			
	-46	015-04052-104		2	015-04052-104		2			
	-58	015-04052-105		2	015-04052-105		2			
YLAA0120 AND YLAA0125	-17	015-04052-101	ZP385KCE	2	015-04052-101	ZP385KCE	2	N/A	N/A	N/A
	-28	015-04052-101		2	015-04052-101		2			
	-40	015-04052-102		2	015-04052-102		2			
	-46	015-04052-104		2	015-04052-104		2			
	-58	015-04052-105		2	015-04052-105		2			
YLAA0135 AND YLAA0141	-17	015-04052-101	ZP385KCE	3	015-04052-101	ZP385KCE	1	015-04045-101	ZP180KCE	1
	-28	015-04052-101		3	015-04052-101		1	015-04045-101		1
	-40	015-04052-102		3	015-04052-102		1	015-04045-102		1
	-46	015-04052-104		3	015-04052-104		1	015-04045-104		1
	-58	015-04052-105		3	015-04052-105		1	015-04045-105		1
YLAA0150, YLAA0155 AND YLAA0156	-17	015-04052-101	ZP385KCE	3	015-04052-101	ZP385KCE	2	N/A	N/A	N/A
	-28	015-04052-101		3	015-04052-101		2			
	-40	015-04052-102		3	015-04052-102		2			
	-46	015-04052-104		3	015-04052-104		2			
	-58	015-04052-105		3	015-04052-105		2			
YLAA0170 AND YLAA0175	-17	015-04052-101	ZP385KCE	3	015-04052-101	ZP385KCE	3	N/A	N/A	N/A
	-28	015-04052-101		3	015-04052-101		3			
	-40	015-04052-102		3	015-04052-102		3			
	-46	015-04052-104		3	015-04052-104		3			
	-58	015-04052-105		3	015-04052-105		3			

COMPRESSOR (CONT'D)

72257-001c

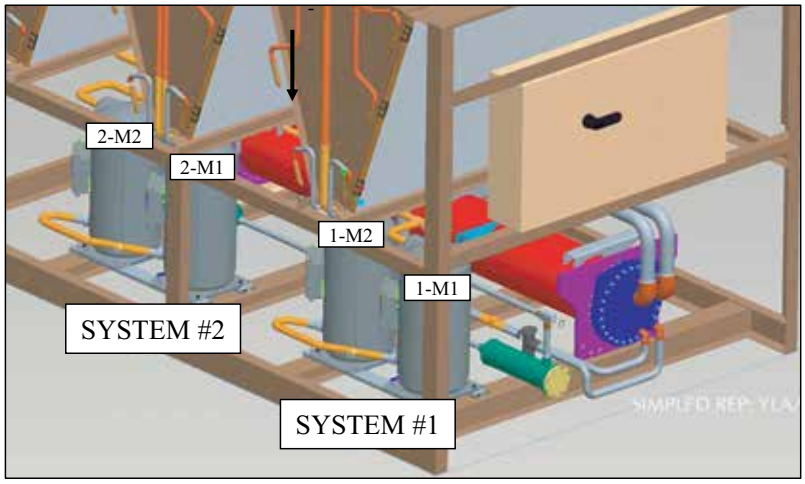

YLAA0091, YLAA0115 and YLAA0120

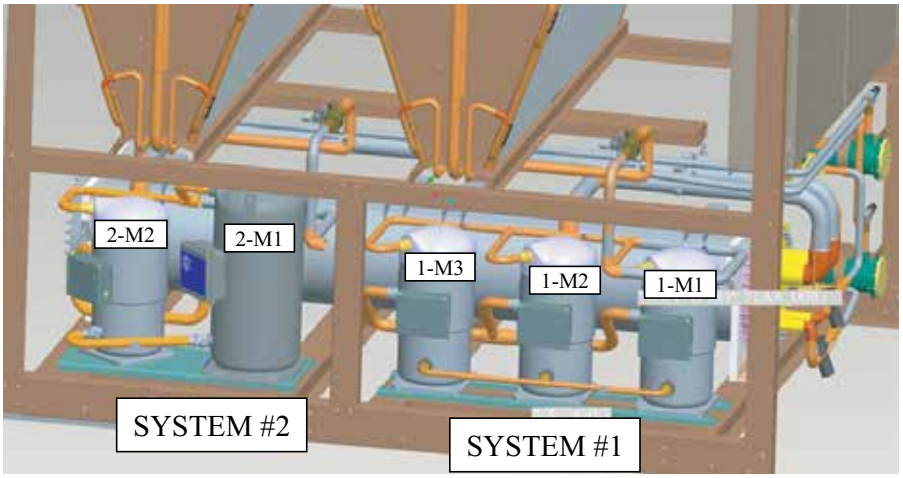

72257-002c

YLAA0090, YLAA0101, YLAA0135, YLAA0150 and YLAA0155

72257-003c

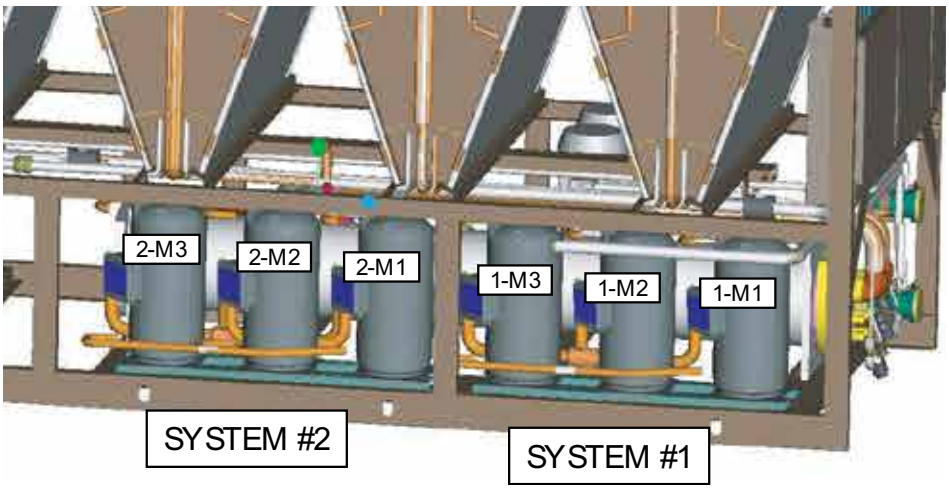

YLAA0070 and YLAA0080

FIGURE 8 - COMPRESSOR LAYOUTS

COMPRESSOR (CONT'D)

TABLE 8 - RECOMMENDED COMPRESSOR OIL TYPE

ITEM	REF.	DESCRIPTION	(6) 1 GALLON	5 GALLON
OIL[s]	R-410A	Oil, Compressor (Type 'V')	011-00948-000	011-00949-000

[S] = Recommended Spare Parts

TABLE 9 - COMPRESSOR HEATER AND SOUND BLANKET PART NUMBERS

COMPRESSOR PART NUMBER	HEATER PART NUMBER	QUANTITY PER COMPRESSOR	SOUND BLANKET PART NUMBER	QUANTITY PER COMPRESSOR
015-04045-xxx	025-37888-000	1	010-06507-002	1
015-04055-xxx	025-40351-000	1	010-06507-007	1
015-04052-xxx	025-37853-000	1	010-06507-000	1

TABLE 10 - COMPRESSOR COMPONENTS

ITEM	REF. NO.	DESCRIPTION	YORK NO.
A	071-0520-05	Module Protector	025-38995-000
B	005-0892-00	Cover, T-Box	025-38996-000

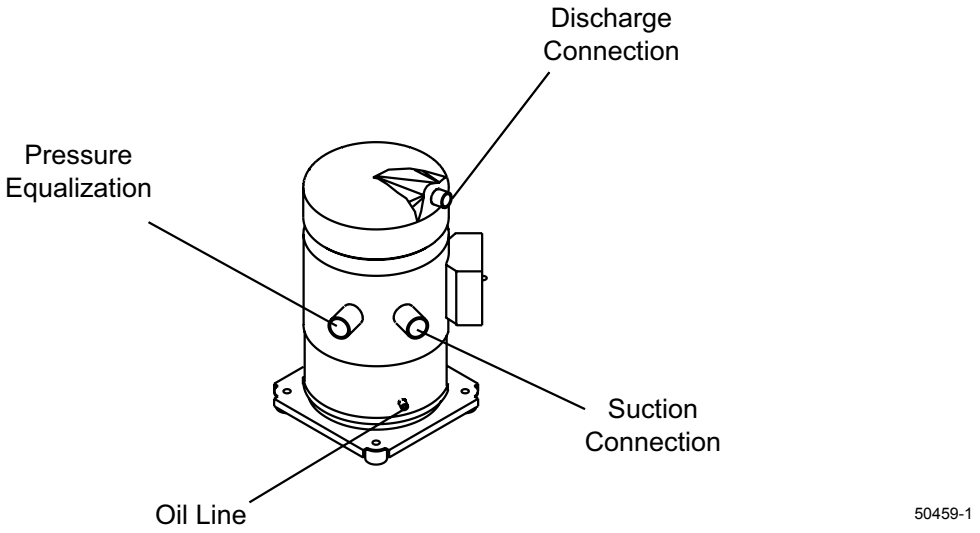

FIGURE 9 - COMPRESSOR

CONTROL PANEL AND POWER PANEL CONFIGURATIONS

Power panels and option panels are offered in several different configurations using three (3) major components:

1. TERMINAL BLOCKS
2. CIRCUIT BREAKERS
3. NON-FUSED DISCONNECT SWITCHES

The most basic chiller power wiring configuration uses TERMINAL BLOCKS in the power panels, and an options panel with no power wire termination hardware. The model pin number locations 16 and 17 would be X and X to reflect this basic combination. Identify model pin number locations 16 and 17 to identify the chiller power wiring connections and hardware listed below.

PIN 16 & 17 LETTER CODE IDENTIFIERS		OPTION PANEL AND POWER PANEL CONFIGURATIONS
S	X	Single Point Supply Terminal Block
S	D	Single Point Supply Non-Fused Disconnect Switch
B	X	Single Point Supply Circuit Breaker

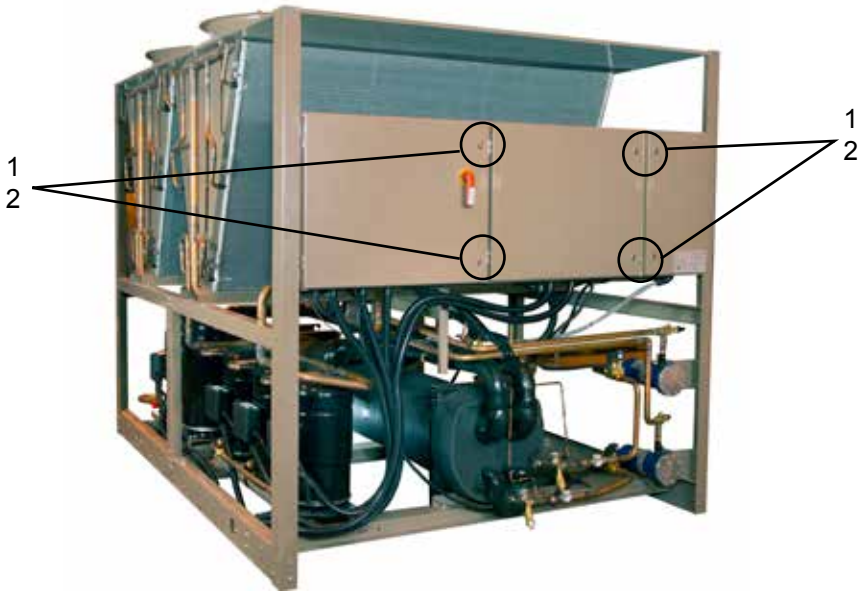

ITEM #	DESCRIPTION	YORK NO.
1	Door Lock	021-32078-000
2	Key	021-32231-000

FIGURE 10 - PANEL DOOR LOCK AND KEY

CONTROL PANEL AND POWER PANEL COMPONENTS

TABLE 11 - CONTROL PANEL AND POWER PANEL IDENTIFIERS

MODEL	VOLTAGE CODE	SINGLE POINT TERMINAL BLOCK (SX)	SINGLE POINT NON-FUSED DISCONNECT SWITCH (SD)	SINGLE POINT CIRCUIT BREAKER (BX)	SINGLE POINT NON-FUSED DISCONNECT SWITCH W/ IND. SYS. CIRCUIT BREAKERS (DB)
YLAA0070	17	371-05245-101	371-05245-201	371-05245-301	371-05245-401
	28	371-05245-102	371-05245-202	371-05245-302	371-05245-402
	40	371-05245-103	371-05245-203	371-05245-303	371-05245-403
	46	371-05245-104	371-05245-204	371-05245-304	371-05245-404
	58	371-05245-105	371-05245-205	371-05245-305	371-05245-405
YLAA0080	17	371-05245-107	371-05245-207	371-05245-307	371-05245-407
	28	371-05245-108	371-05245-208	371-05245-308	371-05245-408
	40	371-05245-109	371-05245-209	371-05245-309	371-05245-409
	46	371-05245-110	371-05245-210	371-05245-310	371-05245-410
	58	371-05245-111	371-05245-211	371-05245-311	371-05245-411
YLAA0090	17	371-05246-101	371-05246-201	371-05246-301	371-05246-401
	28	371-05246-102	371-05246-202	371-05246-302	371-05246-402
	40	371-05246-103	371-05246-203	371-05246-303	371-05246-403
	46	371-05246-104	371-05246-204	371-05246-304	371-05246-404
	58	371-05246-105	371-05246-205	371-05246-305	371-05246-405
YLAA0091	17	371-05244-101	371-05244-201	371-05244-301	371-05244-401
	28	371-05244-102	371-05244-202	371-05244-302	371-05244-402
	40	371-05244-103	371-05244-203	371-05244-303	371-05244-403
	46	371-05244-104	371-05244-204	371-05244-304	371-05244-404
	58	371-05244-105	371-05244-205	371-05244-305	371-05244-405
YLAA0100 AND YLAA0101	17	371-05246-107	371-05246-207	371-05246-307	371-05246-407
	28	371-05246-108	371-05246-208	371-05246-308	371-05246-408
	40	371-05246-109	371-05246-209	371-05246-309	371-05246-409
	46	371-05246-110	371-05246-210	371-05246-310	371-05246-410
	58	371-05246-111	371-05246-211	371-05246-311	371-05246-411

To Identify Replacement Part Numbers, Select Panel Identifier Number From The *Table 11 on page 24* Or From The Panel Identifier Label Shown in *Figure 11 on page 26*, Then Refer To The 'Control And Power Panel Components' Tables 12 through 22 starting on page 28.

CONTROL PANEL AND POWER PANEL COMPONENTS (CONT'D)

TABLE 11 – CONTROL PANEL AND POWER PANEL IDENTIFIERS (CONT'D)

MODEL	VOLTAGE CODE	SINGLE POINT TERMINAL BLOCK (SX)	SINGLE POINT NON-FUSED DISCONNECT SWITCH (SD)	SINGLE POINT CIRCUIT BREAKER (BX)	SINGLE POINT NON-FUSED DISCONNECT SWITCH W/ IND. SYS. CIRCUIT BREAKERS (DB)
YLAA0115	17	371-05244-107	371-05244-207	371-05244-307	371-05244-407
	28	371-05244-108	371-05244-208	371-05244-308	371-05244-408
	40	371-05244-109	371-05244-209	371-05244-309	371-05244-409
	46	371-05244-110	371-05244-210	371-05244-310	371-05244-410
	58	371-05244-111	371-05244-211	371-05244-311	371-05244-411
YLAA0120 AND YLAA0125	17	371-05244-107	371-05244-207	371-05244-307	371-05244-407
	28	371-05244-108	371-05244-208	371-05244-308	371-05244-408
	40	371-05244-109	371-05244-209	371-05244-309	371-05244-409
	46	371-05244-110	371-05244-210	371-05244-310	371-05244-410
	58	371-05244-111	371-05244-211	371-05244-311	371-05244-411
YLAA0135 AND YLAA0141	17	371-05246-113	371-05246-213	371-05246-313	371-05246-413
	28	371-05246-114	371-05246-214	371-05246-314	371-05246-414
	40	371-05246-115	371-05246-215	371-05246-315	371-05246-415
	46	371-05246-116	371-05246-216	371-05246-316	371-05246-416
	58	371-05246-117	371-05246-217	371-05246-317	371-05246-417
YLAA0150	17	371-05246-119	371-05246-219	371-05246-319	371-05246-419
	28	371-05246-120	371-05246-220	371-05246-320	371-05246-420
	40	371-05246-121	371-05246-221	371-05246-321	371-05246-421
	46	371-05246-122	371-05246-222	371-05246-322	371-05246-422
	58	371-05246-123	371-05246-223	371-05246-323	371-05246-423
YLAA0155 AND YLAA0156	17	371-05246-119	371-05246-219	371-05246-319	371-05246-419
	28	371-05246-120	371-05246-220	371-05246-320	371-05246-420
	40	371-05246-121	371-05246-221	371-05246-321	371-05246-421
	46	371-05246-122	371-05246-222	371-05246-322	371-05246-422
	58	371-05246-123	371-05246-223	371-05246-323	371-05246-423
YLAA0170 AND YLAA0175	17	371-05247-101	371-05247-201	371-05247-301	371-05247-401
	28	371-05247-102	371-05247-202	371-05247-302	371-05247-402
	40	371-05247-103	371-05247-203	371-05247-303	371-05247-403
	46	371-05247-104	371-05247-204	371-05247-304	371-05247-404
	58	371-05247-105	371-05247-205	371-05247-305	371-05247-405

To Identify Replacement Part Numbers, Select Panel Identifier Number From The *Table 11 on page 24* Or From The Panel Identifier Label Shown in *Figure 11 on page 26*, Then Refer To The 'Control And Power Panel Components' Tables 12 through 22 starting on page 28.

POWER PANEL COMPONENTS

DSCN0003

***Service Note:** Locate the PANEL NUMBER sticker on the upper right hand corner of the power panel, see Figure 11, then refer to the appropriate parts list for that number.

FIGURE 11 - PANEL PART NUMBER STICKER

POWER PANEL COMPONENTS (CONT'D)

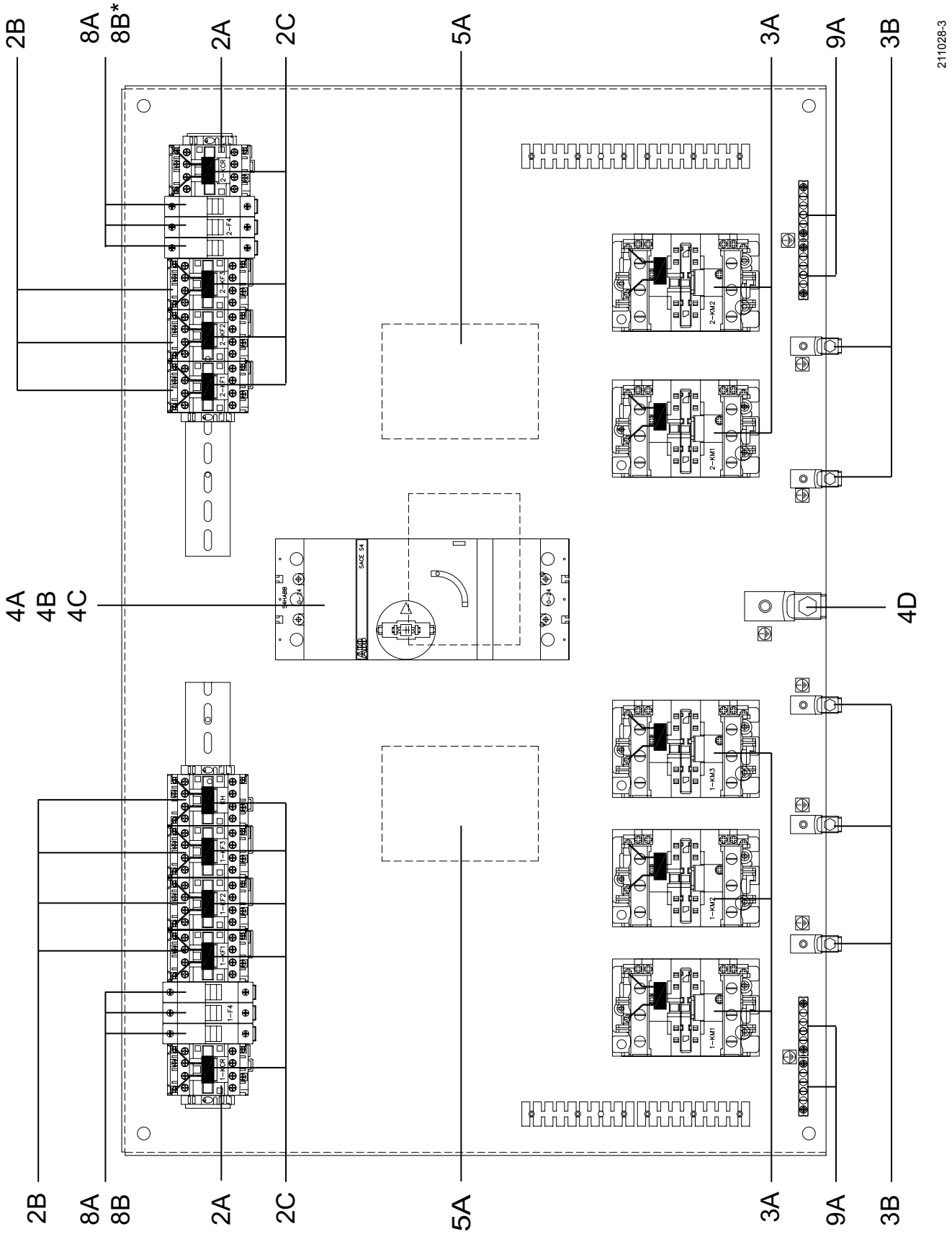

FIGURE 12 - POWER PANEL COMPONENTS

POWER PANEL COMPONENTS (CONT'D)

TABLE 12 - POWER PANEL COMPONENTS - YLAA0070

ITEM	QTY.	DESCRIPTION	SINGLE POINT TERMINAL BLOCK (SX)	SINGLE POINT NON-FUSED DISCONNECT SWITCH (SD)	SINGLE POINT CIRCUIT BREAKER (BX)	SINGLE POINT NON-FUSED DISCONNECT SWITCH W/ IND. SYSTEM CIRCUIT BREAKERS (DB)
			371-05245-10x	**371-05245-20x**	**371-05245-30x**	**371-05245-40x**
2A[S]	3	Fan Control Relay	024-35526-000	024-35526-000	024-35526-000	024-35526-000
2B[S]	4	Fan Contactor (-17, -28 & -40)	024-35444-000 (12A)**	024-35444-000 (12A)**	024-35444-000 (12A)**	024-35444-000 (12A)**
		Fan Contactor (-46 & -58)	024-35441-000 (9A)**	024-35441-000 (9A)**	024-35441-000 (9A)**	024-35441-000 (9A)**
2C	13	Surge Supressor	031-00808-000	031-00808-000	031-00808-000	031-00808-000
3A	6	Compressor Contactor (-17)	024-35470-000 (80A)**	024-35470-000 (80A)**	024-35470-000 (80A)**	024-35470-000 (80A)**
	2	Compressor Contactor (-28)	024-35470-000 (80A)**	024-35470-000 (80A)**	024-35470-000 (80A)**	024-35470-000 (80A)**
	4		024-35467-000 (65A)**	024-35467-000 (65A)**	024-35467-000 (65A)**	024-35467-000 (65A)**
	6	Compressor Contactor (-40, -46 & -58)	024-35462-000 (50A)**	024-35462-000 (50A)**	024-35462-000 (50A)**	024-35462-000 (50A)**
3B	6	Ground Lug	025-34088-000	025-34088-000	025-34088-000	025-34088-000
4A	1	Terminal Block	025-39410-000	N/A	N/A	N/A
	1	Circuit Breaker (-17 & -28)	N/A	N/A	025-34424-000	N/A
		Circuit Breaker (-40, -46 & -58)	N/A	N/A	025-34419-000	N/A
	1	Non-Fused Disc. Sw. (-17 & -28)	N/A	024-30965-000	N/A	024-30965-000
		Non-Fused Disc. Sw. (-40, -46 & -58)	N/A	024-30963-000	N/A	024-30963-000
4B	3	Safety Cover (use w/ TB)	025-39393-000	N /A	N/A	N /A
4C	1	Oper. Mech. (use w/ CB or NFDS)	N/A	024-31878-000	024-31878-000	024-31878-000
4D	1	Ground Lug	025-34089-000	025-34089-000	025-34089-000	025-34089-000
5A	1	Ind. Sys. Circuit Breaker (Sys. 1)	N/A	N/A	N/A	025-34419-000
	1	Ind. Sys. Circuit Breaker (Sys. 2)	N/A	N/A	N/A	024-31842-000
8A	2	Fuse Holder	025-37863-000	025-37863-000	025-37863-000	025-37863-000
8B	6	Fuse	See Fuse Table on Page 36			
9A	4	Ground Bar	025-35685-000	025-35685-000	025-35685-000	025-35685-000

[S]Recommended Spare Part
See *Figure 12 on page 27.*

Note: Lug Kits for Circuit Breakers or Non-Fused Disconnect Switches - See LUG KIT TABLE on Page 38.

*Service Note: Locate the PANEL PART NUMBER sticker on the upper right hand corner of the power panel, see *Figure 11 on page 26*, then refer to the appropriate parts list for that number.

**Service Note: Make a visual inspection of the contactors in order to select the correct replacement part.

024-35441-000	(9A)	RI1-D0910-G7
024-35444-000	(12A)	RI1-D1210-G7
024-35447-000	(18A)	RI1-D1810-G7
024-35451-000	(25A)	RI1-D2510-G7
024-35462-000	(50A)	RI1-D5011-G7
024-35467-000	(65A)	RI1-D6511-G7
024-35470-000	(80A)	RI1-D8011-G7
024-35473-000	(95A)	RI1-D9511-G7
024-34294-000	(150A)	TE-LC1D150-F7

POWER PANEL COMPONENTS (CONT'D)

TABLE 13 - POWER PANEL COMPONENTS - YLAA0080

ITEM	QTY.	DESCRIPTION	SINGLE POINT TERMINAL BLOCK (SX)	SINGLE POINT NON-FUSED DISCONNECT SWITCH (SD)	SINGLE POINT CIRCUIT BREAKER (BX)	SINGLE POINT NON-FUSED DISCONNECT SWITCH W/ IND. SYSTEM CIRCUIT BREAKERS (DB)
			371-05245-10x	**371-05245-20x**	**371-05245-30x**	**371-05245-40x**
2A[S]	3	Fan Control Relay	024-35526-000	024-35526-000	024-35526-000	024-35526-000
2B[S]	4	Fan Contactor (-17, -28 & -40)	024-35444-000 (12A)**	024-35444-000 (12A)**	024-35444-000 (12A)**	024-35444-000 (12A)**
		Fan Contactor (-46 & -58)	024-35441-000 (9A)**	024-35441-000 (9A)**	024-35441-000 (9A)**	024-35441-000 (9A)**
2C	13	Surge Supressor	031-00808-000	031-00808-000	031-00808-000	031-00808-000
3A	6	Compressor Contactor (-17)	024-35470-000 (80A)**	024-35470-000 (80A)**	024-35470-000 (80A)**	024-35470-000 (80A)**
	4	Compressor Contactor (-28)	024-35470-000 (80A)**	024-35470-000 (80A)**	024-35470-000 (80A)**	024-35470-000 (80A)**
	2		024-35467-000 (65A)**	024-35467-000 (65A)**	024-35467-000 (65A)**	024-35467-000 (65A)**
	3	Compressor Contactor (-40)	024-35467-000 (65A)**	024-35467-000 (65A)**	024-35467-000 (65A)**	024-35467-000 (65A)**
	3		024-35462-000 (50A)**	024-35462-000 (50A)**	024-35462-000 (50A)**	024-35462-000 (50A)**
	6	Compressor Contactor (-46 & -58)	024-35462-000 (50A)**	024-35462-000 (50A)**	024-35462-000 (50A)**	024-35462-000 (50A)**
3B	6	Ground Lug	025-34088-000	025-34088-000	025-34088-000	025-34088-000
4A	1	Terminal Block	025-39410-000	N/A	N/A	N/A
	1	Circuit Breaker (-17 & -28)	N/A	N/A	025-34424-000	N/A
		Circuit Breaker (-40, -46 & -58)	N/A	N/A	025-34419-000	N/A
	1	Non-Fused Disc. Sw. (-17 & -28)	N/A	024-30965-000	N/A	024-30965-000
		Non-Fused Disc. Sw. (-40)	N/A	024-30964-000	N/A	024-30964-000
		Non-Fused Disc. Sw. (-46 & -58)	N/A	024-30963-000	N/A	024-30963-000
4B	3	Safety Cover (use w/ TB)	025-39393-000	N /A	N/A	N /A
4C	1	Oper. Mech. (use w/ CB or NFDS)	N/A	024-31878-000	024-31878-000	024-31878-000
4D	1	Ground Lug	025-34089-000	025-34089-000	025-34089-000	025-34089-000
5A	1	Ind. Sys. Circuit Breaker (Sys. 1)	N/A	N/A	N/A	025-34419-000
	1	Ind. Sys. Circuit Breaker (Sys. 2)	N/A	N/A	N/A	024-31842-000
8A	2	Fuse Holder	025-37863-000	025-37863-000	025-37863-000	025-37863-000
8B	6	Fuse	See Fuse Table on Page 36			
9A	4	Ground Bar	025-35685-000	025-35685-000	025-35685-000	025-35685-000

[S]Recommended Spare Part
See *Figure 12 on page 27.*

Note: Lug Kits for Circuit Breakers or Non-Fused Disconnect Switches - See LUG KIT TABLE on Page 38.

*Service Note: Locate the PANEL PART NUMBER sticker on the upper right hand corner of the power panel, see *Figure 11 on page 26*, then refer to the appropriate parts list for that number.

**Service Note: Make a visual inspection of the contactors in order to select the correct replacement part.

024-35441-000	(9A)	RI1-D0910-G7
024-35444-000	(12A)	RI1-D1210-G7
024-35447-000	(18A)	RI1-D1810-G7
024-35451-000	(25A)	RI1-D2510-G7
024-35462-000	(50A)	RI1-D5011-G7
024-35467-000	(65A)	RI1-D6511-G7
024-35470-000	(80A)	RI1-D8011-G7
024-35473-000	(95A)	RI1-D9511-G7
024-34294-000	(150A)	TE-LC1D150-F7

FORM 150.72-RP1
ISSUE DATE: 11/17/2017

POWER PANEL COMPONENTS (CONT'D)

TABLE 14 - POWER PANEL COMPONENTS - YLAA0090

ITEM	QTY.	DESCRIPTION	SINGLE POINT TERMINAL BLOCK (SX)	SINGLE POINT NON-FUSED DISCONNECT SWITCH (SD)	SINGLE POINT CIRCUIT BREAKER (BX)	SINGLE POINT NON-FUSED DISCONNECT SWITCH W/ IND. SYSTEM CIRCUIT BREAKERS (DB)
			371-05246-10x	**371-05246-20x**	**371-05246-30x**	**371-05246-40x**
2A[S]	3	Fan Control Relay	024-35526-000	024-35526-000	024-35526-000	024-35526-000
2B[S]	4	Fan Contactor (-17, -28 & -40)	024-35444-000 (12A)**	024-35444-000 (12A)**	024-35444-000 (12A)**	024-35444-000 (12A)**
		Fan Contactor (-46 & -58)	024-35441-000 (9A)**	024-35441-000 (9A)**	024-35441-000 (9A)**	024-35441-000 (9A)**
2C	14	Surge Supressor	031-00808-000	031-00808-000	031-00808-000	031-00808-000
3A	4	Compressor Contactor (-17)	024-35470-000 (80A)**	024-35470-000 (80A)**	024-35470-000 (80A)**	024-35470-000 (80A)**
	1		024-34294-000 (150A)**	024-34294-000 (150A)**	024-34294-000 (150A)**	024-34294-000 (150A)**
	4	Compressor Contactor (-28)	024-35470-000 (80A)**	024-35470-000 (80A)**	024-35470-000 (80A)**	024-35470-000 (80A)**
	1		024-35473-000 (95A)**	024-35473-000 (95A)**	024-35467-000 (65A)**	024-35467-000 (65A)**
	4	Compressor Contactor (-40)	024-35467-000 (65A)**	024-35467-000 (65A)**	024-35467-000 (65A)**	024-35467-000 (65A)**
	1		024-35473-000 (95A)**	024-35473-000 (95A)**	024-35462-000 (50A)**	024-35462-000 (50A)**
	4	Compressor Contactor (-46 & -58)	024-35462-000 (50A)**	024-35462-000 (50A)**	024-35462-000 (50A)**	024-35462-000 (50A)**
	1		024-35470-000 (80A)**	024-35470-000 (80A)**	024-35470-000 (80A)**	024-35470-000 (80A)**
3B	5	Ground Lug	025-34088-000	025-34088-000	025-34088-000	025-34088-000
4A	1	Terminal Block (-17 & -28)	025-32536-000	N/A	N/A	N/A
		Terminal Block (-40, -46 & -58)	025-34910-000	N/A	N/A	
	1	Circuit Breaker (-17 & -28)	N/A	N/A	025-34424-000	N/A
		Circuit Breaker (-40, -46 & -58)	N/A	N/A	025-34419-000	N/A
	1	Non-Fused Disc. Sw. (-17 & -28)	N/A	024-30965-000	N/A	024-30965-000
		Non-Fused Disc. Sw. (-40)	N/A	024-30964-000	N/A	024-30964-000
		Non-Fused Disc. Sw. (-46 & -58)	N/A	024-30963-000	N/A	024-30963-000
4B	3	Safety Cover (use w/ TB -17 & -28)	025-39397-000	N /A	N/A	N /A
		Safety Cover (use w/ TB -40, -46 & -58)	025-39393-000			
4C	1	Oper. Mech. (use w/ CB or NFDS)	N/A	024-31878-000	024-31878-000	024-31878-000
4D	1	Ground Lug	025-34089-000	025-34089-000	025-34089-000	025-34089-000
5A	1	Ind. Sys. Circuit Breaker (Sys. 1)	N/A	N/A	N/A	025-34419-000
	1	Ind. Sys. Circuit Breaker (Sys. 2)	N/A	N/A	N/A	024-31842-000
8A	2	Fuse Holder	025-37863-000	025-37863-000	025-37863-000	025-37863-000
8B	6	Fuse	See Fuse Table on Page 36			
9A	4	Ground Bar	025-35685-000	025-35685-000	025-35685-000	025-35685-000

[S]Recommended Spare Part. See *Figure 12 on page 27.*
Note: Lug Kits for Circuit Breakers or Non-Fused Disconnect Switches - See LUG KIT TABLE on Page 38.

*Service Note: Locate the PANEL PART NUMBER sticker on the upper right hand corner of the power panel, see *Figure 11 on page 26*, then refer to the appropriate parts list for that number.

**Service Note:
Make a visual inspection of the contactors in order to select the correct replacement part.

024-35441-000	(9A)	RI1-D0910-G7 |	024-35444-000	(12A)	RI1-D1210-G7
024-35447-000	(18A)	RI1-D1810-G7 |	024-35451-000	(25A)	RI1-D2510-G7
024-35462-000	(50A)	RI1-D5011-G7 |	024-35467-000	(65A)	RI1-D6511-G7
024-35470-000	(80A)	RI1-D8011-G7 |	024-35473-000	(95A)	RI1-D9511-G7
024-34294-000	(150A)	TE-LC1D150-F7			

POWER PANEL COMPONENTS (CONT'D)

TABLE 15 - POWER PANEL COMPONENTS - YLAA0091

ITEM	QTY.	DESCRIPTION	SINGLE POINT TERMINAL BLOCK (SX)	SINGLE POINT NON-FUSED DISCONNECT SWITCH (SD)	SINGLE POINT CIRCUIT BREAKER (BX)	SINGLE POINT NON-FUSED DISCONNECT SWITCH W/ IND. SYSTEM CIRCUIT BREAKERS (DB)
			371-05244-10x	**371-05244-20x**	**371-05244-30x**	**371-05244-40x**
2A[S]	3	Fan Control Relay	024-35526-000	024-35526-000	024-35526-000	024-35526-000
2B[S]	6	Fan Contactor (-17, -28 & -40)	024-35444-000 (12A)**	024-35444-000 (12A)**	024-35444-000 (12A)**	024-35444-000 (12A)**
		Fan Contactor (-46 & -58)	024-35441-000 (9A)**	024-35441-000 (9A)**	024-35441-000 (9A)**	024-35441-000 (9A)**
2C	13	Surge Supressor	031-00808-000	031-00808-000	031-00808-000	031-00808-000
3A	2	Compressor Contactor (-17 & -28)	024-34294-000 (150A)**	024-34294-000 (150A)**	024-34294-000 (150A)**	024-34294-000 (150A)**
	2		024-35470-000 (80A)**	024-35470-000 (80A)**	024-35470-000 (80A)**	024-35470-000 (80A)**
	2	Compressor Contactor (-40)	024-35467-000 (65A)**	024-35467-000 (65A)**	024-35467-000 (65A)**	024-35467-000 (65A)**
	2		024-35473-000 (D9511)**	024-35473-000 (95A)**	024-35462-000 (50A)**	024-35462-000 (50A)**
	2	Compressor Contactor (-46 & -58)	024-35462-000 (50A)**	024-35462-000 (50A)**	024-35462-000 (50A)**	024-35462-000 (50A)**
	2		024-35470-000 (80A)**	024-35470-000 (80A)**	024-35470-000 (80A)**	024-35470-000 (80A)**
3B	4	Ground Lug	025-34088-000	025-34088-000	025-34088-000	025-34088-000
4A	1	Terminal Block (-17 & -28)	025-32536-000	N/A	N/A	N/A
		Terminal Block (-40, -46 & -58)	025-34910-000	N/A	N/A	N/A
	1	Circuit Breaker (-17 & -28)	N/A	N/A	025-34425-000	N/A
		Circuit Breaker (-40, -46 & -58)	N/A	N/A	025-34424-000	N/A
	1	Non-Fused Disc. Sw. (-17 & -28)	N/A	024-30965-000	N/A	024-30965-000
		Non-Fused Disc. Sw. (-40)	N/A	024-30964-000	N/A	024-30964-000
		Non-Fused Disc. Sw. (-46 & -58)	N/A	024-30963-000	N/A	024-30963-000
4B	3	Safety Cover (use w/ TB -17 & -28)	025-39397-000	N /A	N/A	N /A
		Safety Cover (use w/ TB -40, -46 & -58)	025-39393-000	N /A	N /A	N /A
4C	1	Oper. Mech. (use w/ CB or NFDS)	N/A	024-31878-000	024-31878-000	024-31878-000
4D	1	Ground Lug	025-34089-000	025-34089-000	025-34089-000	025-34089-000
5A	1	Ind. Sys. Circuit Breaker (Sys. 1)	N/A	N/A	N/A	025-34419-000
	1	Ind. Sys. Circuit Breaker (Sys. 2)	N/A	N/A	N/A	025-34419-000
8A	2	Fuse Holder	025-37863-000	025-37863-000	025-37863-000	025-37863-000
8B	6	Fuse	See Fuse Table on Page 36			
9A	4	Ground Bar	025-35685-000	025-35685-000	025-35685-000	025-35685-000

[S]Recommended Spare Part. See *Figure 12 on page 27.*
Note: Lug Kits for Circuit Breakers or Non-Fused Disconnect Switches - See LUG KIT TABLE on Page 38.

*Service Note: Locate the PANEL PART NUMBER sticker on the upper right hand corner of the power panel, see *Figure 11 on page 26*, then refer to the appropriate parts list for that number.

**Service Note:
Make a visual inspection of the contactors in order to select the correct replacement part.

024-35441-000 (9A)	RI1-D0910-G7 | 024-35444-000 (12A)	RI1-D1210-G7
024-35447-000 (18A)	RI1-D1810-G7 | 024-35451-000 (25A)	RI1-D2510-G7
024-35462-000 (50A)	RI1-D5011-G7 | 024-35467-000 (65A)	RI1-D6511-G7
024-35470-000 (80A)	RI1-D8011-G7 | 024-35473-000 (95A)	RI1-D9511-G7
024-34294-000 (150A)	TE-LC1D150-F7	

POWER PANEL COMPONENTS (CONT'D)

TABLE 16 - POWER PANEL COMPONENTS - YLAA0100 & YLAA0101

ITEM	QTY.	DESCRIPTION	SINGLE POINT TERMINAL BLOCK (SX)	SINGLE POINT NON-FUSED DISCON-NECT SWITCH (SD)	SINGLE POINT CIRCUIT BREAKER (BX)	SINGLE POINT NON-FUSED DISCONNECT SWITCH W/ IND. SYSTEM CIRCUIT BREAKERS (DB)
			371-05246-10X	**371-05246-20X**	**371-05246-30X**	**371-05246-40X**
2As	3	Fan Control Relay	024-35526-000	024-35526-000	024-35526-000	024-35526-000
2Bs	4	Fan Contactor (-17, -28 & -40)	024-35444-000 (12A)**	024-35444-000 (12A)**	024-35444-000 (12A)**	024-35444-000 (12A)**
	1		024-35447-000 (18A)**	024-35447-000 (18A)**	024-35447-000 (18A)**	024-35447-000 (18A)**
	3	Fan Contactor (-46 & -58)	024-35444-000 (12A)**	024-35444-000 (12A)**	024-35444-000 (12A)**	024-35444-000 (12A)**
	2		024-35441-000 (9A)**	024-35441-000 (9A)**	024-35441-000 (9A)**	024-35441-000 (9A)**
2C	14	Surge Supressor	031-00808-000	031-00808-000	031-00808-000	031-00808-000
3A	3	Compressor Contactor (-17 & -28)	024-35470-000 (80A)**	024-35470-000 (80A)**	024-35470-000 (80A)**	024-35470-000 (80A)**
	2		024-34294-000 (150A)**	024-34294-000 (150A)**	024-34294-000 (150A)**	024-34294-000 (150A)**
	3	Compressor Contactor (-40)	024-35467-000 (65A)**	024-35467-000 (65A)**	024-35467-000 (65A)**	024-35467-000 (65A)**
	2		024-35473-000 (95A)**	024-35473-000 (95A)**	024-35473-000 (95A)**	024-35473-000 (95A)**
	3	Compressor Contactor (-46 & -58)	024-35462-000 (50A)**	024-35462-000 (50A)**	024-35462-000 (50A)**	024-35462-000 (50A)**
	2		024-35470-000 (80A)**	024-35470-000 (80A)**	024-35470-000 (80A)**	024-35470-000 (80A)**
3B	5	Ground Lug	025-34088-000	025-34088-000	025-34088-000	025-34088-000
4A	1	Terminal Block (-17 & -28)	025-32536-000	N/A	N/A	N/A
		Terminal Block (-40, -46 & -58)	025-34910-000	N/A	N/A	N/A
	1	Circuit Breaker (-17 & -28)	N/A	N/A	025-34425-000	N/A
		Circuit Breaker (-40 & -46)	N/A	N/A	025-34424-000	N/A
		Circuit Breaker (-58)	N/A	N/A	025-34419-000	N/A
	1	Non-Fused Disc. Sw. (-17 & -28)	N/A	024-30965-000	N/A	024-30965-000
		Non-Fused Disc. Sw. (-40 & -46)	N/A	024-30964-000	N/A	024-30964-000
		Non-Fused Disc. Sw. (-58)	N/A	024-30963-000	N/A	024-30963-000
4B	3	Safety Cover (use w/ TB -17 & -28)	025-39397-000	N /A	N/A	N /A
		Safety Cover (use w/ TB -40, -46 & -58)	025-39393-000	N/A	N/A	N/A
4C	1	Oper. Mech. (use w/ CB or NFDS)	N/A	024-31878-000	024-31878-000	024-31878-000
4D	1	Ground Lug	025-34089-000	025-34089-000	025-34089-000	025-34089-000
5A	1	Ind. Sys. Circuit Breaker (Sys. 1)	N/A	N/A	N/A	025-34419-000
	1	Ind. Sys. Circuit Breaker (Sys. 2)	N/A	N/A	N/A	025-34424-000
8A	2	Fuse Holder	025-37863-000	025-37863-000	025-37863-000	025-37863-000
8B	6	Fuse	See Fuse Table on Page 36			
9A	4	Ground Bar	025-35685-000	025-35685-000	025-35685-000	025-35685-000

[S]Recommended Spare Part. See *Figure 12 on page 27*.
Note: Lug Kits for Circuit Breakers or Non-Fused Disconnect Switches - See LUG KIT TABLE on Page 38.

*Service Note: Locate the PANEL PART NUMBER sticker on the upper right hand corner of the power panel, see *Figure 11 on page 26*, then refer to the appropriate parts list for that number.

**Service Note:
Make a visual inspection of the contactors in order to select the correct replacement part.

024-35441-000	(9A)	RI1-D0910-G7 |	024-35444-000	(12A)	RI1-D1210-G7
024-35447-000	(18A)	RI1-D1810-G7 |	024-35451-000	(25A)	RI1-D2510-G7
024-35462-000	(50A)	RI1-D5011-G7 |	024-35467-000	(65A)	RI1-D6511-G7
024-35470-000	(80A)	RI1-D8011-G7 |	024-35473-000	(95A)	RI1-D9511-G7
024-34294-000	(150A)	TE-LC1D150-F7			

POWER PANEL COMPONENTS (CONT'D)

TABLE 17 - POWER PANEL COMPONENTS - YLAA0115

ITEM	QTY.	DESCRIPTION	SINGLE POINT TERMINAL BLOCK (SX)	SINGLE POINT NON-FUSED DISCONNECT SWITCH (SD)	SINGLE POINT CIRCUIT BREAKER (BX)	SINGLE POINT NON-FUSED DISCONNECT SWITCH W/ IND. SYSTEM CIRCUIT BREAKERS (DB)
			371-05244-10X	**371-05244-20X**	**371-05244-30X**	**371-05244-40X**
2A[S]	3	Fan Control Relay	024-35526-000	024-35526-000	024-35526-000	024-35526-000
2B[S]	4	Fan Contactor (-17 & -28)	024-35444-000 (12A)**	024-35444-000 (12A)**	024-35444-000 (12A)**	024-35444-000 (12A)**
	2		024-35447-000 (18A)**	024-35447-000 (18A)**	024-35447-000 (18A)**	024-35447-000 (18A)**
	6	Fan Contactor (-40)	024-35444-000 (12A)**	024-35444-000 (12A)**	024-35444-000 (12A)**	024-35444-000 (12A)**
	6	Fan Contactor (-46 & -58)	024-35441-000 (9A)**	024-35441-000 (9A)**	024-35441-000 (9A)**	024-35441-000 (9A)**
2C	13	Surge Supressor	031-00808-000	031-00808-000	031-00808-000	031-00808-000
3A	4	Compressor Contactor (-17 & -28)	024-34294-000 (150A)**	024-34294-000 (150A)**	024-34294-000 (150A)**	024-34294-000 (150A)**
	4	Compressor Contactor (-40)	024-35473-000 (95A)**	024-35473-000 (95A)**	024-35473-000 (95A)**	024-35473-000 (95A)**
	4	Compressor Contactor (-46 & -58)	024-35470-000 (80A)**	024-35470-000 (80A)**	024-35470-000 (80A)**	024-35470-000 (80A)**
3B	4	Ground Lug	025-34088-000	025-34088-000	025-34088-000	025-34088-000
4A	1	Terminal Block (-17 & -28)	025-32536-000	N/A	N/A	N/A
		Terminal Block (-40, -46 & -58)	025-34910-000	N/A	N/A	N/A
	1	Circuit Breaker (-17 & -28)	N/A	N/A	025-34425-000	N/A
		Circuit Breaker (-40, -46 & -58)	N/A	N/A	025-34424-000	N/A
	1	Non-Fused Disc. Sw. (-17 & -28)	N/A	024-31889-000	N/A	024-31889-000
		Non-Fused Disc. Sw. (-40, -46 & -58)	N/A	024-30964-000	N/A	024-30964-000
4B	3	Safety Cover (use w/ TB -17 & -28)	025-39397-000	N /A	N/A	N /A
		Safety Cover (use w/ TB -40, -46 & -58)	025-39393-000	N/A	N/A	N/A
4C	1	Oper. Mech. (use w/ CB or NFDS)	N/A	024-31878-000	024-31878-000	024-31878-000
4D	1	Ground Lug	025-34089-000	025-34089-000	025-34089-000	025-34085-000
5A	2	Ind. Sys. Circuit Breaker (-17 & -28)	N/A	N/A	N/A	025-34424-000
	2	Ind. Sys. Circuit Breaker (-40, -46 & -58)	N/A	N/A	N/A	025-34419-000
8A	2	Fuse Holder	025-37863-000	025-37863-000	025-37863-000	025-37863-000
8B	6	Fuse	See Fuse Table on Page 36			
9A	4	Ground Bar	025-35685-000	025-35685-000	025-35685-000	025-35685-000

[S]Recommended Spare Part. See *Figure 12 on page 27.*
Note: Lug Kits for Circuit Breakers or Non-Fused Disconnect Switches - See LUG KIT TABLE on Page 38.

*Service Note: Locate the PANEL PART NUMBER sticker on the upper right hand corner of the power panel, see *Figure 11 on page 26*, then refer to the appropriate parts list for that number.

**Service Note:
Make a visual inspection of the contactors in order to select the correct replacement part.

024-35441-000	(9A)	RI1-D0910-G7 |	024-35444-000	(12A)	RI1-D1210-G7
024-35447-000	(18A)	RI1-D1810-G7 |	024-35451-000	(25A)	RI1-D2510-G7
024-35462-000	(50A)	RI1-D5011-G7 |	024-35467-000	(65A)	RI1-D6511-G7
024-35470-000	(80A)	RI1-D8011-G7 |	024-35473-000	(95A)	RI1-D9511-G7
024-34294-000	(150A)	TE-LC1D150-F7			

POWER PANEL COMPONENTS (CONT'D)

TABLE 18 - POWER PANEL COMPONENTS - YLAA0135 & YLAA0141

ITEM	QTY.	DESCRIPTION	SINGLE POINT TERMINAL BLOCK (SX)	SINGLE POINT NON-FUSED DISCONNECT SWITCH (SD)	SINGLE POINT CIRCUIT BREAKER (BX)	SINGLE POINT NON-FUSED DISCONNECT SWITCH W/ IND. SYSTEM CIRCUIT BREAKERS (DB)
			371-05244-10X	**371-05244-20X**	**371-05244-30X**	**371-05244-40X**
2As	3	Fan Control Relay	024-35526-000	024-35526-000	024-35526-000	024-35526-000
2Bs	4	Fan Contactor (-17 & -28)	024-35444-000 (12A)**	024-35444-000 (12A)**	024-35444-000 (12A)**	024-35444-000 (12A)**
	2		024-35447-000 (18A)**	024-35447-000 (18A)**	024-35447-000 (18A)**	024-35447-000 (18A)**
	6	Fan Contactor (-40)	024-35444-000 (12A)**	024-35444-000 (12A)**	024-35444-000 (12A)**	024-35444-000 (12A)**
	6	Fan Contactor (-46 & -58)	024-35441-000 (9A)**	024-35441-000 (9A)**	024-35441-000 (9A)**	024-35441-000 (9A)**
2C	13	Surge Supressor	031-00808-000	031-00808-000	031-00808-000	031-00808-000
3A	4	Compressor Contactor (-17 & -28)	024-34294-000 (150A)**	024-34294-000 (150A)**	024-34294-000 (150A)**	024-34294-000 (150A)**
	4	Compressor Contactor (-40)	024-35473-000 (95A)**	024-35473-000 (95A)**	024-35473-000 (95A)**	024-35473-000 (95A)**
	4	Compressor Contactor (-46 & -58)	024-35470-000 (80A)**	024-35470-000 (80A)**	024-35470-000 (80A)**	024-35470-000 (80A)**
3B	4	Ground Lug	025-34088-000	025-34088-000	025-34088-000	025-34088-000
4A	1	Terminal Block (-17 & -28)	025-32536-000	N/A	N/A	N/A
		Terminal Block (-40, -46 & -58)	025-34910-000	N/A	N/A	N/A
	1	Circuit Breaker (-17 & -28)	N/A	N/A	025-34425-000	N/A
		Circuit Breaker (-40, -46 & -58)	N/A	N/A	025-34424-000	N/A
	1	Non-Fused Disc. Sw. (-17 & -28)	N/A	024-31889-000	N/A	024-31889-000
		Non-Fused Disc. Sw. (-40, -46 & -58)	N/A	024-30964-000	N/A	024-30964-000
4B	3	Safety Cover (use w/ TB -17 & -28)	025-39397-000	N /A	N/A	N /A
		Safety Cover (use w/ TB -40, -46 & -58)	025-39393-000	N/A	N/A	N/A
4C	1	Oper. Mech. (use w/ CB or NFDS)	N/A	024-31878-000	024-31878-000	024-31878-000
4D	1	Ground Lug	025-34089-000	025-34089-000	025-34089-000	025-34085-000
5A	2	Ind. Sys. Circuit Breaker (-17 & -28)	N/A	N/A	N/A	025-34424-000
	2	Ind. Sys. Circuit Breaker (-40, -46 & -58)	N/A	N/A	N/A	025-34419-000
8A	2	Fuse Holder	025-37863-000	025-37863-000	025-37863-000	025-37863-000
8B	6	Fuse	See Fuse Table on Page 36			
9A	4	Ground Bar	025-35685-000	025-35685-000	025-35685-000	025-35685-000

[S]Recommended Spare Part. See *Figure 12 on page 27.*
Note: Lug Kits for Circuit Breakers or Non-Fused Disconnect Switches - See LUG KIT TABLE on Page 38.

*Service Note: Locate the PANEL PART NUMBER sticker on the upper right hand corner of the power panel, see *Figure 11 on page 26*, then refer to the appropriate parts list for that number.

**Service Note:
Make a visual inspection of the contactors in order to select the correct replacement part.

024-35441-000 (9A)	RI1-D0910-G7 | 024-35444-000 (12A)	RI1-D1210-G7
024-35447-000 (18A)	RI1-D1810-G7 | 024-35451-000 (25A)	RI1-D2510-G7
024-35462-000 (50A)	RI1-D5011-G7 | 024-35467-000 (65A)	RI1-D6511-G7
024-35470-000 (80A)	RI1-D8011-G7 | 024-35473-000 (95A)	RI1-D9511-G7
024-34294-000 (150A)	TE-LC1D150-F7	

POWER PANEL COMPONENTS (CONT'D)

TABLE 19 - POWER PANEL COMPONENTS - YLAA0120 & YLAA0125

ITEM	QTY.	DESCRIPTION	SINGLE POINT TERMINAL BLOCK (SX)	SINGLE POINT NON-FUSED DISCON-NECT SWITCH (SD)	SINGLE POINT CIRCUIT BREAKER (BX)	SINGLE POINT NON-FUSED DISCONNECT SWITCH W/ IND. SYSTEM CIRCUIT BREAKERS (DB)
			371-05246-10X	**371-05246-20X**	**371-05246-30X**	**371-05246-40X**
2A[S]	3	Fan Control Relay	024-35526-000	024-35526-000	024-35526-000	024-35526-000
2B[S]	3	Fan Contactor (-17 & -28)	024-35444-000 (12A)**	024-35444-000 (12A)**	024-35444-000 (12A)**	024-35444-000 (12A)**
	3		024-35447-000 (18A)**	024-35447-000 (18A)**	024-35447-000 (18A)**	024-35447-000 (18A)**
	4	Fan Contactor (-40)	024-35444-000 (12A)**	024-35444-000 (12A)**	024-35444-000 (12A)**	024-35444-000 (12A)**
	2		024-35447-000 (18A)**	024-35447-000 (18A)**	024-35447-000 (18A)**	024-35447-000 (18A)**
	6	Fan Contactor (-46 & -58)	024-35444-000 (12A)**	024-35444-000 (12A)**	024-35444-000 (12A)**	024-35444-000 (12A)**
2C	14	Surge Supressor	031-00808-000	031-00808-000	031-00808-000	031-00808-000
3A	4	Compressor Contactor (-17 & -28)	024-34294-000 (150A)**	024-34294-000 (150A)**	024-34294-000 (150A)**	024-34294-000 (150A)**
	1		024-35470-000 (80A)**	024-35470-000 (80A)**	024-35470-000 (80A)**	024-35470-000 (80A)**
	4	Compressor Contactor (-40)	024-35473-000 (95A)**	024-35473-000 (95A)**	024-35473-000 (95A)**	024-35473-000 (95A)**
	1		024-35467-000 (65A)**	024-35467-000 (65A)**	024-35467-000 (65A)**	024-35467-000 (65A)**
	4	Compressor Contactor (-46 & -58)	024-35470-000 (80A)**	024-35470-000 (80A)**	024-35470-000 (80A)**	024-35470-000 (80A)**
	1		024-35462-000 (50A)**	024-35462-000 (50A)**	024-35462-000 (50A)**	024-35462-000 (50A)**
3B	5	Ground Lug	025-34088-000	025-34088-000	025-34088-000	025-34088-000
4A	1	Terminal Block (-17 & -28)	025-32536-000	N/A	N/A	N/A
		Terminal Block (-40, -46 & -58)	025-34910-000	N/A	N/A	N/A
	1	Circuit Breaker (-17 & -28)	N/A	N/A	025-34473-000	N/A
		Circuit Breaker (-40, -46 & -58)	N/A	N/A	025-34424-000	N/A
	1	Non-Fused Disc. Sw. (-17 & -28)	N/A	024-31889-000	N/A	024-31889-000
		Non-Fused Disc. Sw. (-40)	N/A	024-30965-000	N/A	024-30965-000
		Non-Fused Disc. Sw. (-46 & -58)	N/A	024-30964-000	N/A	024-30964-000
4B	3	Safety Cover (use w/ TB -17 & -28)	025-39397-000	N/A	N/A	N/A
		Safety Cover (use w/ TB -40, -46 & -58)	025-39393-000	N/A	N/A	N/A
4C	1	Oper. Mech. (use w/ CB or NFDS)	N/A	024-31878-000	024-31878-000	024-31878-000
4D	1	Ground Lug	025-34089-000	025-34089-000	025-34089-000	025-34086-000
5A	2	Ind. Sys. Circuit Breaker (-17 & -28)	N/A	N/A	N/A	025-34424-000
	2	Ind. Sys. Circuit Breaker (-40, -46 & -58)	N/A	N/A	N/A	025-34419-000
8A	2	Fuse Holder	025-37863-000	025-37863-000	025-37863-000	025-37863-000
8B	6	Fuse	See Fuse Table on Page 36			
9A	4	Ground Bar	025-35685-000	025-35685-000	025-35685-000	025-35685-000

[S]Recommended Spare Part. See *Figure 12 on page 27.*
Note: Lug Kits for Circuit Breakers or Non-Fused Disconnect Switches - See LUG KIT TABLE on Page 38.

*Service Note: Locate the PANEL PART NUMBER sticker on the upper right hand corner of the power panel, see *Figure 11 on page 26*, then refer to the appropriate parts list for that number.

**Service Note:
Make a visual inspection of the contactors in order to select the correct replacement part.

024-35441-000 (9A)	RI1-D0910-G7 | 024-35444-000 (12A)	RI1-D1210-G7
024-35447-000 (18A)	RI1-D1810-G7 | 024-35451-000 (25A)	RI1-D2510-G7
024-35462-000 (50A)	RI1-D5011-G7 | 024-35467-000 (65A)	RI1-D6511-G7
024-35470-000 (80A)	RI1-D8011-G7 | 024-35473-000 (95A)	RI1-D9511-G7
024-34294-000 (150A)	TE-LC1D150-F7	

POWER PANEL COMPONENTS (CONT'D)

TABLE 20 - POWER PANEL COMPONENTS YLAA0150

ITEM	QTY.	DESCRIPTION	SINGLE POINT TERMINAL BLOCK (SX)	SINGLE POINT NON-FUSED DISCONNECT SWITCH (SD)	SINGLE POINT CIRCUIT BREAKER (BX)	SINGLE POINT NON-FUSED DISCONNECT SWITCH W/ IND. SYSTEM CIRCUIT BREAKERS (DB)
			371-05246-10X	**371-05246-20X**	**371-05246-30X**	**371-05246-40X**
2A[S]	3	Fan Control Relay	024-35526-000	024-35526-000	024-35526-000	024-35526-000
2B[S]	4	Fan Contactor (-17 & -28)	024-35447-000 (18A)**	024-35444-000 (12A)**	024-35444-000 (12A)**	024-35444-000 (12A)**
	2		024-35451-000 (25A)**	024-35447-000 (18A)**	024-35447-000 (18A)**	024-35447-000 (18A)**
	4	Fan Contactor (-40)	024-35444-000 (12A)**	024-35444-000 (12A)**	024-35444-000 (12A)**	024-35444-000 (12A)**
	2		024-35447-000 (18A)**	024-35447-000 (18A)**	024-35447-000 (18A)**	024-35447-000 (18A)**
	6	Fan Contactor (-46 & -58)	024-35444-000 (12A)**	024-35444-000 (12A)**	024-35444-000 (12A)**	024-35444-000 (12A)**
2C	14	Surge Supressor	031-00808-000	031-00808-000	031-00808-000	031-00808-000
3A	5	Compressor Contactor (-17 & -28)	024-34294-000 (150A)**	024-34294-000 (150A)**	024-34294-000 (150A)**	024-34294-000 (150A)**
	5	Compressor Contactor (-40)	024-35473-000 (95A)**	024-35473-000 (95A)**	024-35473-000 (95A)**	024-35473-000 (95A)**
	5	Compressor Contactor (-46 & -58)	024-35470-000 (80A)**	024-35470-000 (80A)**	024-35470-000 (80A)**	024-35470-000 (80A)**
3B	5	Ground Lug	025-34088-000	025-34088-000	025-34088-000	025-34088-000
4A	1	Terminal Block (-17 & -28)	025-32536-000	N/A	N/A	N/A
		Terminal Block (-40, -46 & -58)	025-34910-000	N/A	N/A	N/A
	1	Circuit Breaker (-17 & -28)	N/A	N/A	025-34473-000	N/A
		Circuit Breaker (-40, -46 & -58)	N/A	N/A	025-34424-000	N/A
	1	Non-Fused Disc. Sw. (-17 & -28)	N/A	024-31889-000	N/A	024-31889-000
		Non-Fused Disc. Sw. (-40, -46 & -58)	N/A	024-30965-000	N/A	024-30965-000
4B	3	Safety Cover (use w/ TB -17 & -28)	025-39397-000	N/A	N/A	N/A
		Safety Cover (use w/ TB -40, -46 & -58)	025-39393-000	N/A	N/A	N/A
4C	1	Oper. Mech. (use w/ CB or NFDS)	N/A	024-31878-000	024-31878-000	024-31878-000
4D	1	Ground Lug	025-34089-000	025-34089-000	025-34089-000	025-34086-000
5A	2	Ind. Sys. Circuit Breaker (-17 & -28)	N/A	N/A	N/A	025-34424-000
	1	Ind. Sys. Circuit Breaker (-40, -46 & -58)	N/A	N/A	N/A	025-34419-000
	1		N/A	N/A	N/A	025-34420-000
8A	2	Fuse Holder	025-37863-000	025-37863-000	025-37863-000	025-37863-000
8B	6	Fuse	See Fuse Table on Page 36			
9A	4	Ground Bar	025-35685-000	025-35685-000	025-35685-000	025-35685-000

[S]Recommended Spare Part. See *Figure 12 on page 27.*
Note: Lug Kits for Circuit Breakers or Non-Fused Disconnect Switches - See LUG KIT TABLE on Page 38.

*Service Note: Locate the PANEL PART NUMBER sticker on the upper right hand corner of the power panel, see *Figure 11 on page 26*, then refer to the appropriate parts list for that number.

**Service Note:
Make a visual inspection of the contactors in order to select the correct replacement part.

024-35441-000 (9A)	RI1-D0910-G7 |	024-35444-000 (12A)	RI1-D1210-G7
024-35447-000 (18A)	RI1-D1810-G7 |	024-35451-000 (25A)	RI1-D2510-G7
024-35462-000 (50A)	RI1-D5011-G7 |	024-35467-000 (65A)	RI1-D6511-G7
024-35470-000 (80A)	RI1-D8011-G7 |	024-35473-000 (95A)	RI1-D9511-G7
024-34294-000 (150A)	TE-LC1D150-F7		

POWER PANEL COMPONENTS (CONT'D)

TABLE 21 - POWER PANEL COMPONENTS - YLAA0155 & YLAA0156

ITEM	QTY.	DESCRIPTION	SINGLE POINT TERMINAL BLOCK (SX)	SINGLE POINT NON-FUSED DISCONNECT SWITCH (SD)	SINGLE POINT CIRCUIT BREAKER (BX)	SINGLE POINT NON-FUSED DISCONNECT SWITCH W/ IND. SYSTEM CIRCUIT BREAKERS (DB)
			371-05246-10X	**371-05246-20X**	**371-05246-30X**	**371-05246-40X**
2A[S]	3	Fan Control Relay	024-35526-000	024-35526-000	024-35526-000	024-35526-000
2B[S]	4	Fan Contactor (-17 & -28)	024-35447-000 (18A)**	024-35444-000 (12A)**	024-35444-000 (12A)**	024-35444-000 (12A)**
	2		024-35451-000 (25A)**	024-35447-000 (18A)**	024-35447-000 (18A)**	024-35447-000 (18A)**
	4	Fan Contactor (-40)	024-35444-000 (12A)**	024-35444-000 (12A)**	024-35444-000 (12A)**	024-35444-000 (12A)**
	2		024-35447-000 (18A)**	024-35447-000 (18A)**	024-35447-000 (18A)**	024-35447-000 (18A)**
	6	Fan Contactor (-46 & -58)	024-35444-000 (12A)**	024-35444-000 (12A)**	024-35444-000 (12A)**	024-35444-000 (12A)**
2C	14	Surge Supressor	031-00808-000	031-00808-000	031-00808-000	031-00808-000
3A	5	Compressor Contactor (-17 & -28)	024-34294-000 (150A)**	024-34294-000 (150A)**	024-34294-000 (150A)**	024-34294-000 (150A)**
	5	Compressor Contactor (-40)	024-35473-000 (95A)**	024-35473-000 (95A)**	024-35473-000 (95A)**	024-35473-000 (95A)**
	5	Compressor Contactor (-46 & -58)	024-35470-000 (80A)**	024-35470-000 (80A)**	024-35470-000 (80A)**	024-35470-000 (80A)**
3B	5	Ground Lug	025-34088-000	025-34088-000	025-34088-000	025-34088-000
4A	1	Terminal Block (-17 & -28)	025-32536-000	N/A	N/A	N/A
		Terminal Block (-40, -46 & -58)	025-34910-000	N/A	N/A	N/A
	1	Circuit Breaker (-17 & -28)	N/A	N/A	025-34473-000	N/A
		Circuit Breaker (-40, -46 & -58)	N/A	N/A	025-34424-000	N/A
	1	Non-Fused Disc. Sw. (-17 & -28)	N/A	024-31889-000	N/A	024-31889-000
		Non-Fused Disc. Sw. (-40, -46 & -58)	N/A	024-30965-000	N/A	024-30965-000
4B	3	Safety Cover (use w/ TB -17 & -28)	025-39397-000	N/A	N/A	N/A
		Safety Cover (use w/ TB -40, -46 & -58)	025-39393-000	N/A	N/A	N/A
4C	1	Oper. Mech. (use w/ CB or NFDS)	N/A	024-31878-000	024-31878-000	024-31878-000
4D	1	Ground Lug	025-34089-000	025-34089-000	025-34089-000	025-34086-000
5A	2	Ind. Sys. Circuit Breaker (-17 & -28)	N/A	N/A	N/A	025-34424-000
	1	Ind. Sys. Circuit Breaker (-40, -46 & -58)	N/A	N/A	N/A	025-34419-000
	1		N/A	N/A	N/A	025-34420-000
8A	2	Fuse Holder	025-37863-000	025-37863-000	025-37863-000	025-37863-000
8B	6	Fuse	See Fuse Table on Page 36			
9A	4	Ground Bar	025-35685-000	025-35685-000	025-35685-000	025-35685-000

SRecommended Spare Part. See *Figure 12 on page 27*.
Note: Lug Kits for Circuit Breakers or Non-Fused Disconnect Switches - See LUG KIT TABLE on Page 38.

*Service Note: Locate the PANEL PART NUMBER sticker on the upper right hand corner of the power panel, see *Figure 11 on page 26*, then refer to the appropriate parts list for that number.

**Service Note:
Make a visual inspection of the contactors in order to select the correct replacement part.

024-35441-000	(9A)	RI1-D0910-G7 |	024-35444-000	(12A)	RI1-D1210-G7
024-35447-000	(18A)	RI1-D1810-G7 |	024-35451-000	(25A)	RI1-D2510-G7
024-35462-000	(50A)	RI1-D5011-G7 |	024-35467-000	(65A)	RI1-D6511-G7
024-35470-000	(80A)	RI1-D8011-G7 |	024-35473-000	(95A)	RI1-D9511-G7
024-34294-000	(150A)	TE-LC1D150-F7			

POWER PANEL COMPONENTS (CONT'D)

TABLE 22 - POWER PANEL COMPONENTS - YLAA0170 & YLAA0175

ITEM	QTY.	DESCRIPTION	SINGLE POINT TERMINAL BLOCK (SX)	SINGLE POINT NON-FUSED DISCONNECT SWITCH (SD)	SINGLE POINT CIRCUIT BREAKER (BX)	SINGLE POINT NON-FUSED DISCONNECT SWITCH W/ IND. SYSTEM CIRCUIT BREAKERS (DB)
			371-05246-10X	**371-05246-20X**	**371-05246-30X**	**371-05246-40X**
2A[S]	3	Fan Control Relay	024-35526-000	024-35526-000	024-35526-000	024-35526-000
2B[S]	4	Fan Contactor (-17 & -28)	024-35447-000 (18A)**	024-35444-000 (12A)**	024-35444-000 (12A)**	024-35444-000 (12A)**
	2		024-35451-000 (25A)**	024-35447-000 (18A)**	024-35447-000 (18A)**	024-35447-000 (18A)**
	4	Fan Contactor (-40)	024-35444-000 (12A)**	024-35444-000 (12A)**	024-35444-000 (12A)**	024-35444-000 (12A)**
	2		024-35447-000 (18A)**	024-35447-000 (18A)**	024-35447-000 (18A)**	024-35447-000 (18A)**
	6	Fan Contactor (-46 & -58)	024-35444-000 (12A)**	024-35444-000 (12A)**	024-35444-000 (12A)**	024-35444-000 (12A)**
2C	14	Surge Supressor	031-00808-000	031-00808-000	031-00808-000	031-00808-000
3A	5	Compressor Contactor (-17 & -28)	024-34294-000 (150A)**	024-34294-000 (150A)**	024-34294-000 (150A)**	024-34294-000 (150A)**
	5	Compressor Contactor (-40)	024-35473-000 (95A)**	024-35473-000 (95A)**	024-35473-000 (95A)**	024-35473-000 (95A)**
	5	Compressor Contactor (-46 & -58)	024-35470-000 (80A)**	024-35470-000 (80A)**	024-35470-000 (80A)**	024-35470-000 (80A)**
3B	5	Ground Lug	025-34088-000	025-34088-000	025-34088-000	025-34088-000
4A	1	Terminal Block (-17 & -28)	025-32536-000	N/A	N/A	N/A
		Terminal Block (-40, -46 & -58)	025-34910-000	N/A	N/A	N/A
	1	Circuit Breaker (-17 & -28)	N/A	N/A	025-34473-000	N/A
		Circuit Breaker (-40, -46 & -58)	N/A	N/A	025-34424-000	N/A
	1	Non-Fused Disc. Sw. (-17 & -28)	N/A	024-31889-000	N/A	024-31889-000
		Non-Fused Disc. Sw. (-40, -46 & -58)	N/A	024-30965-000	N/A	024-30965-000
4B	3	Safety Cover (use w/ TB -17 & -28)	025-39397-000	N/A	N/A	N/A
		Safety Cover (use w/ TB -40, -46 & -58)	025-39393-000	N/A	N/A	N/A
4C	1	Oper. Mech. (use w/ CB or NFDS)	N/A	024-31878-000	024-31878-000	024-31878-000
4D	1	Ground Lug	025-34089-000	025-34089-000	025-34089-000	025-34086-000
5A	2	Ind. Sys. Circuit Breaker (-17 & -28)	N/A	N/A	N/A	025-34424-000
	1	Ind. Sys. Circuit Breaker (-40, -46 & -58)	N/A	N/A	N/A	025-34419-000
	1		N/A	N/A	N/A	025-34420-000
8A	2	Fuse Holder	025-37863-000	025-37863-000	025-37863-000	025-37863-000
8B	6	Fuse	See Fuse Table on Page 36			
9A	4	Ground Bar	025-35685-000	025-35685-000	025-35685-000	025-35685-000

[S]Recommended Spare Part. See *Figure 12 on page 27*.
Note: Lug Kits for Circuit Breakers or Non-Fused Disconnect Switches - See LUG KIT TABLE on Page 38.

*Service Note: Locate the PANEL PART NUMBER sticker on the upper right hand corner of the power panel, see *Figure 11 on page 26*, then refer to the appropriate parts list for that number.

**Service Note:
Make a visual inspection of the contactors in order to select the correct replacement part.

024-35441-000 (9A)	RI1-D0910-G7 |	024-35444-000 (12A)	RI1-D1210-G7
024-35447-000 (18A)	RI1-D1810-G7 |	024-35451-000 (25A)	RI1-D2510-G7
024-35462-000 (50A)	RI1-D5011-G7 |	024-35467-000 (65A)	RI1-D6511-G7
024-35470-000 (80A)	RI1-D8011-G7 |	024-35473-000 (95A)	RI1-D9511-G7
024-34294-000 (150A)	TE-LC1D150-F7		

LUG KITS AND FUSES

TABLE 23 - LUG KITS (CIRCUIT BREAKER OR NON-FUSED DISCONNECT SWITCH)

LUG KITS		LUGS PER KIT	FITS CB FRAME	AMP	WIRE SIZE	YORK PART NUMBER
CB-0294	ABB-K4TE	3	S4	250A	#6 - 350 kCMIL	025-34418-000
CB-0295	ABB-K5TF		S5	300A	250 - 500 kCMIL	025-34481-000
CB-0296	ABB-K5TG		S5	400A	#3/0 - 250 kCMIL	025-34420-000
CB-0297	ABB-K6TH		S6	600A	250 - 500 kCMIL	025-34414-000
CB-0298	ABB-K6TJ		S6	800A	#2/0 - 400 kCMIL	025-34415-000

TABLE 24 - POWER PANEL FUSE TABLE

FUSE		SIZE	YORK LUG KIT PART NUMBER
FU-0494	600V	15A Time Delay	025-34141-000
FU-0746	600V	30A Time Delay	025-39683-000
FU-0495	600V	20A Time Delay	025-34142-000
FU-0490	600V	8A Time Delay	025-34137-000
FU-0493	600V	12A Time Delay	025-34140-000
FU-0496	600V	25A	025-41732-000

See item 8B on tables 12-22 starting on page 28.

CONTROL PANEL COMPONENTS

CONTROL PANEL

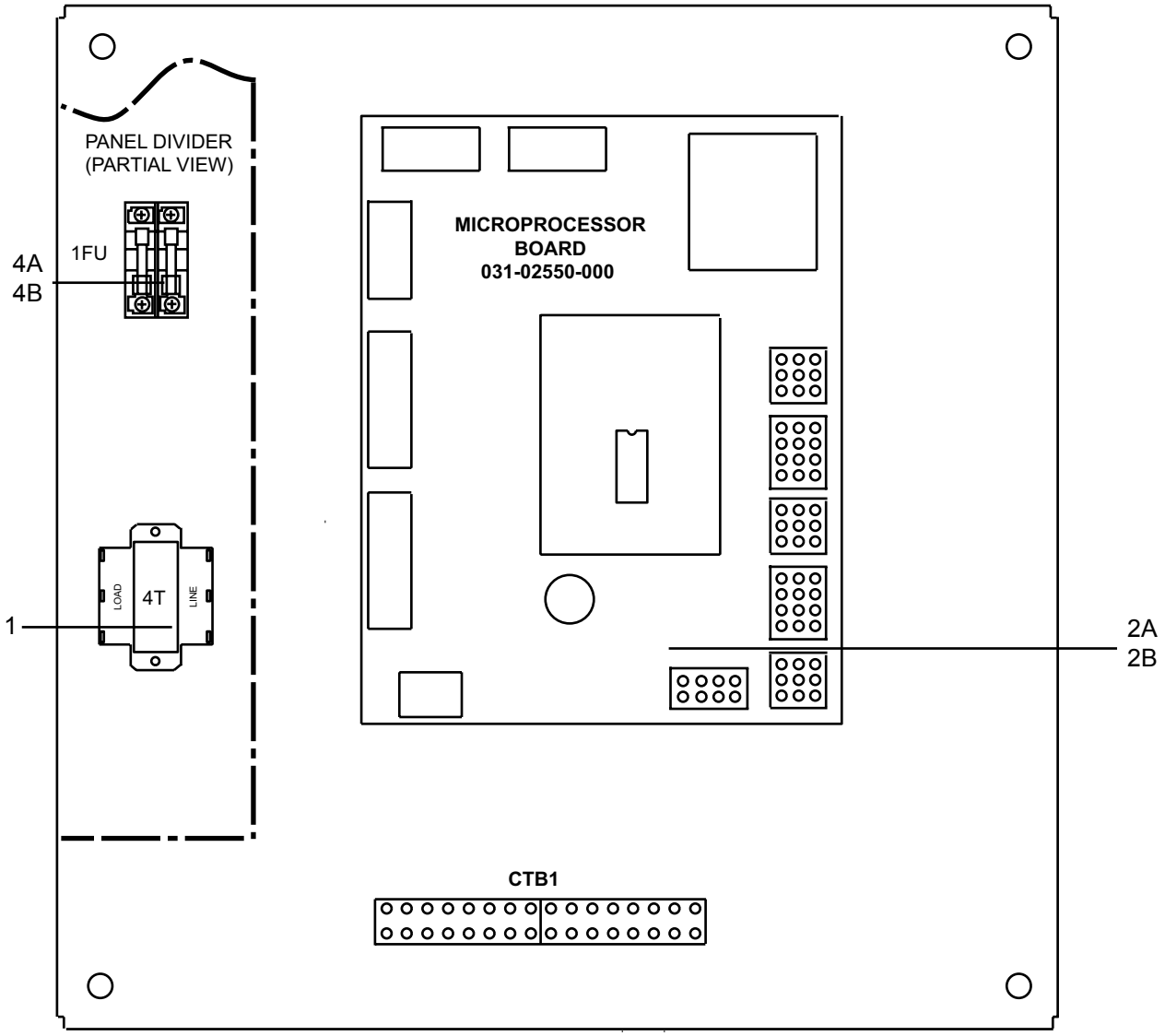

Reference *Table 25 on page 41*

203741-1b

FIGURE 13 - CONTROL PANEL COMPONENTS

CONTROL PANEL COMPONENTS (CONT'D)

TABLE 25 - CONTROL PANEL COMPONENTS

ITEM	DESCRIPTION	COMMON PARTS	QUANTITY
1	Transformer	025-27911-000	1
2A[s]	Micro / IO Board Kit	331-02550-101	1
2B[s]	Flashcard	031-02755-003	1
4A	Fuse Holder	025-34430-000	1
4B	Fuse	025-35905-000	1
5	Display	031-02749-000	1
6	Keypad	024-36082-007	1
7	Switch, On/Off	024-25517-000	1
8	Ribbon Cable, Display	031-02108-000	1

See Figures 13 And 14 starting on page 40
[s]Recommended Spare Part

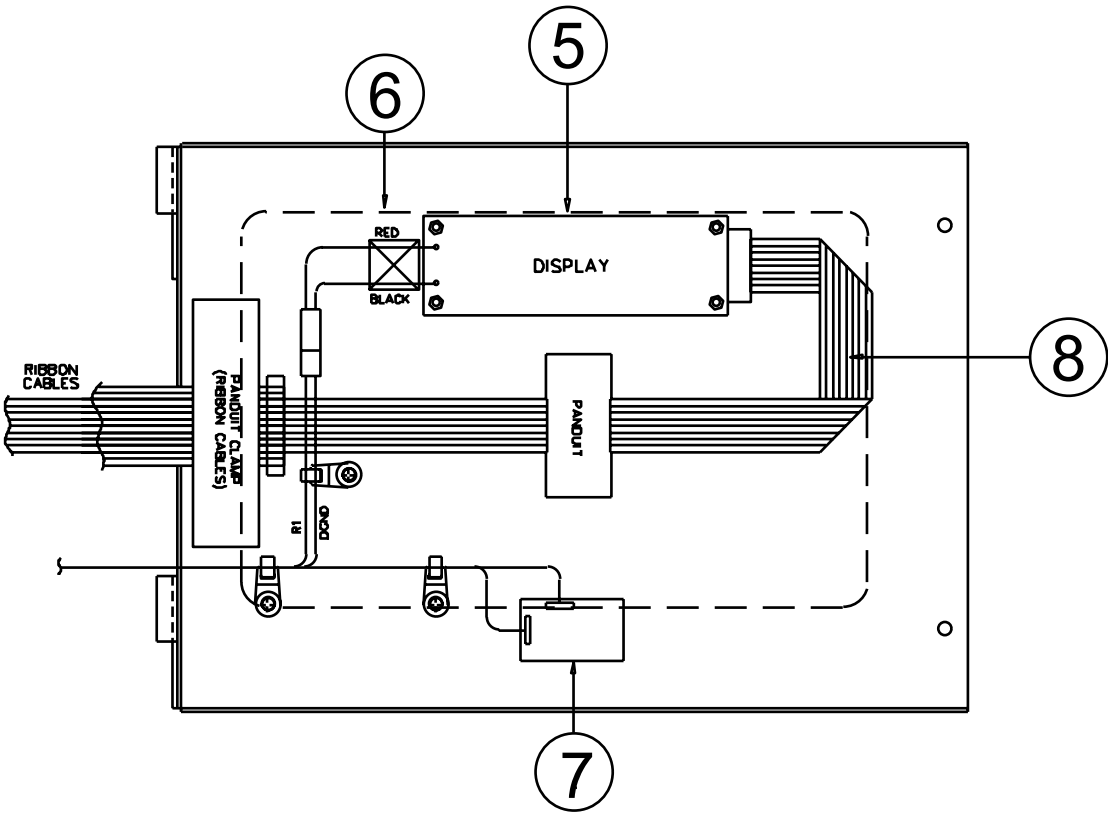

LD05167b

DISPLAY DOOR REAR VIEW

Reference *Table 25 on page 41*

FIGURE 14 - CONTROL PANEL COMPONENTS

SENSOR HARNESSES

TABLE 26 - SENSOR HARNESS WIRING - YLAA0070, 0080, 0090, 0101, 0135, 0150 & YLAAA0155

BOARD LOCATION	CABLE ITEM NO.	CABLE NO.	WIRE COLOR	PLUG PIN NO.	FUNCTION	HARNESS ASSEMBLY PART NUMBER
MICRO P7	100	4	Red	5	System #1 Suction Pressure	575-72382-300
			White	10		
			Black	9		
			Drain	1		
	102	6	Red	6	System #1 Discharge Pressure	575-72382-302
			White	11		
			Black	7		
			Drain	2		
MICRO P6	105	1	Black	7	Leaving Chilled Water Temperature	575-72382-305
			Red	4		
			Drain	1		
	106	3	Black	8	Entering Chilled Water Temperature	575-72382-306
			Red	5		
			Drain	2		
	104	2	Black	9	Outside Air Temperature	575-72382-304
			Red	6		
			Drain	3		
MICRO P9	101	5	Red	5	System #2 Suction Pressure	575-72382-301
			White	10		
			Black	9		
			Drain	1		
	103	7	Red	6	System #2 Discharge Pressure	575-72382-303
			White	11		
			Black	7		
			Drain	2		

See figures 15, 16 and 17 starting on page 43

TABLE 27 - SENSOR HARNESS WIRING - YLAA0091, 0115 & YLAAA0120

BOARD LOCATION	CABLE ITEM NO.	CABLE NO.	WIRE COLOR	PLUG PIN NO.	FUNCTION	HARNESS ASSEMBLY PART NUMBER
MICRO P7	100	4	Red	5	System #1 Suction Pressure	575-72382-307
			White	10		
			Black	9		
			Drain	1		
	102	6	Red	6	System #1 Discharge Pressure	575-72382-309
			White	11		
			Black	7		
			Drain	2		
MICRO P6	105	1	Black	7	Leaving Chilled Water Temperature	575-72382-312
			Red	4		
			Drain	1		
	106	3	Black	8	Entering Chilled Water Temperature	575-72382-313
			Red	5		
			Drain	2		
	104	2	Black	9	Outside Air Temperature	575-72382-311
			Red	6		
			Drain	3		
MICRO P9	101	5	Red	5	System #2 Suction Pressure	575-72382-308
			White	10		
			Black	9		
			Drain	1		
	103	7	Red	6	System #2 Discharge Pressure	575-72382-310
			White	11		
			Black	7		
			Drain	2		

See figures 15, 16 and 17 starting on page 43

SENSOR HARNESSES (CONT'D)

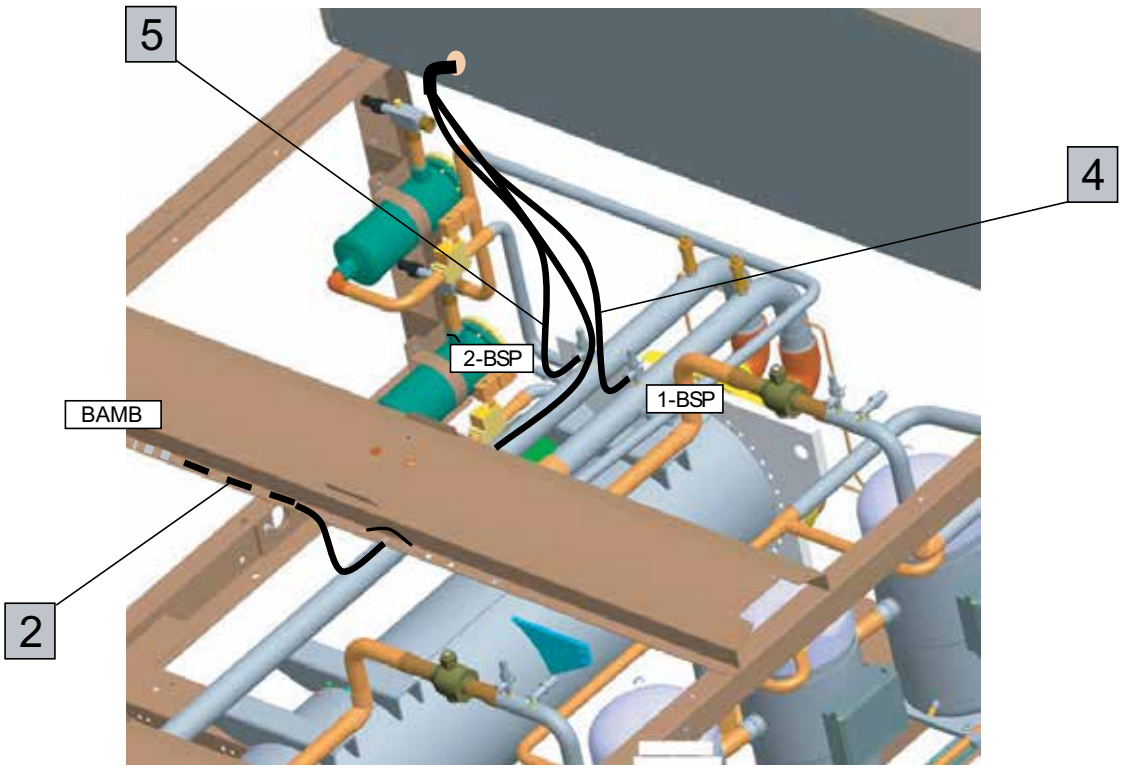

75213-001h

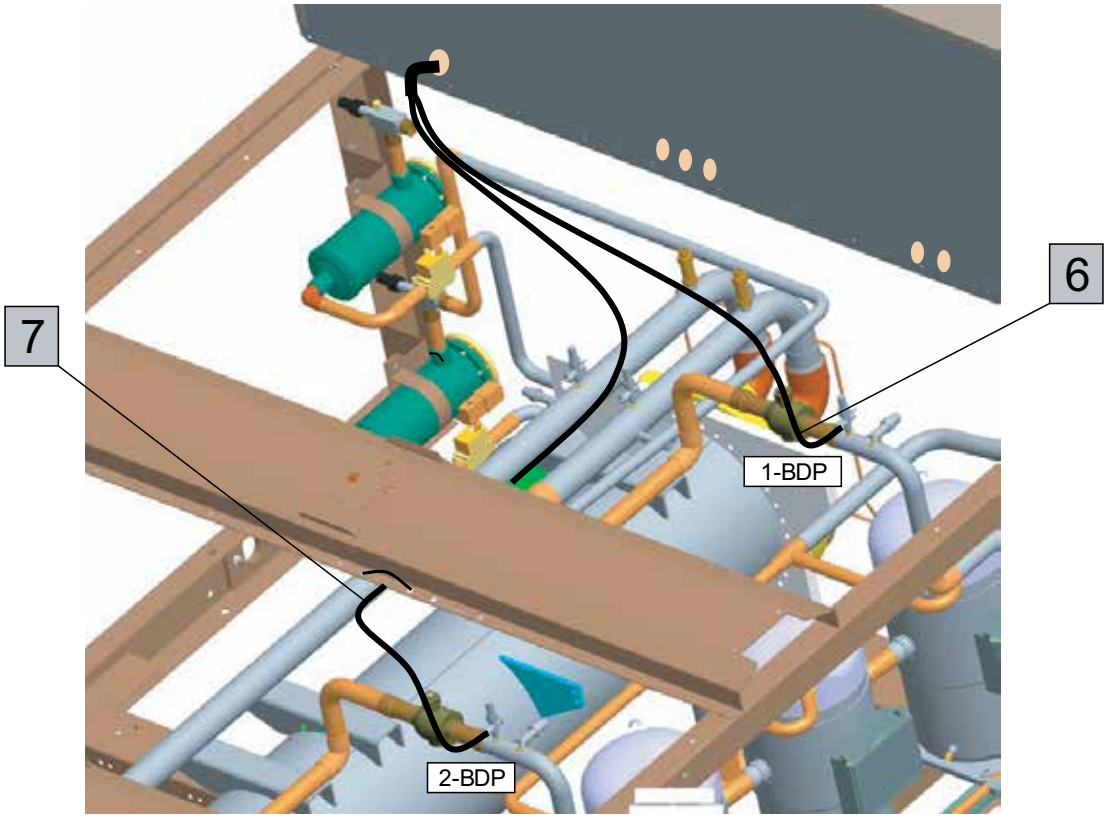

Reference Tables 26 and 27 starting on page 42

75213-001g

FIGURE 15 - HARNESS LAYOUT

SENSOR HARNESSES (CONT'D)

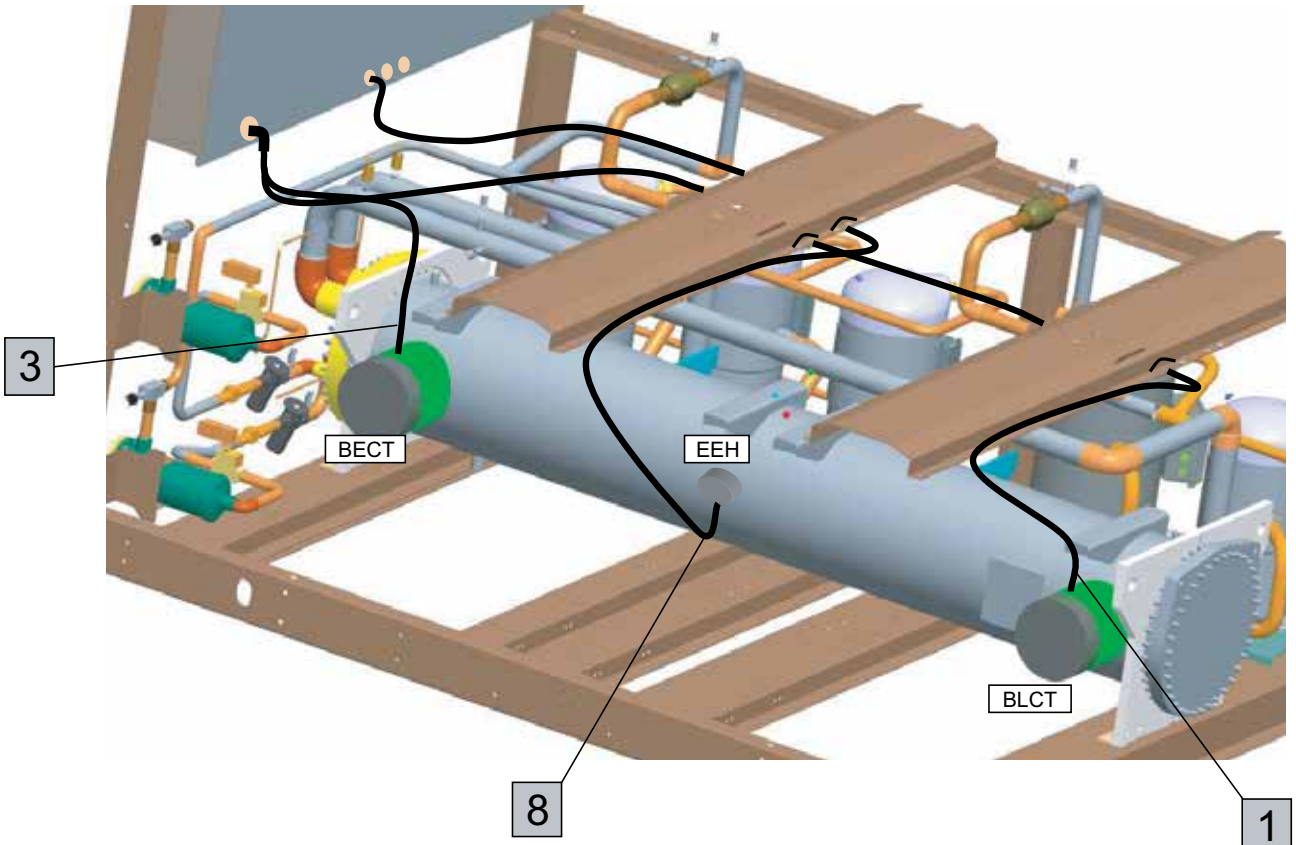

Reference Tables 26 and 27 starting on page 42

EVAPORATOR HEATER HARNESS = 575-72382-211

75213-001-I

FIGURE 16 - HARNESS LAYOUT

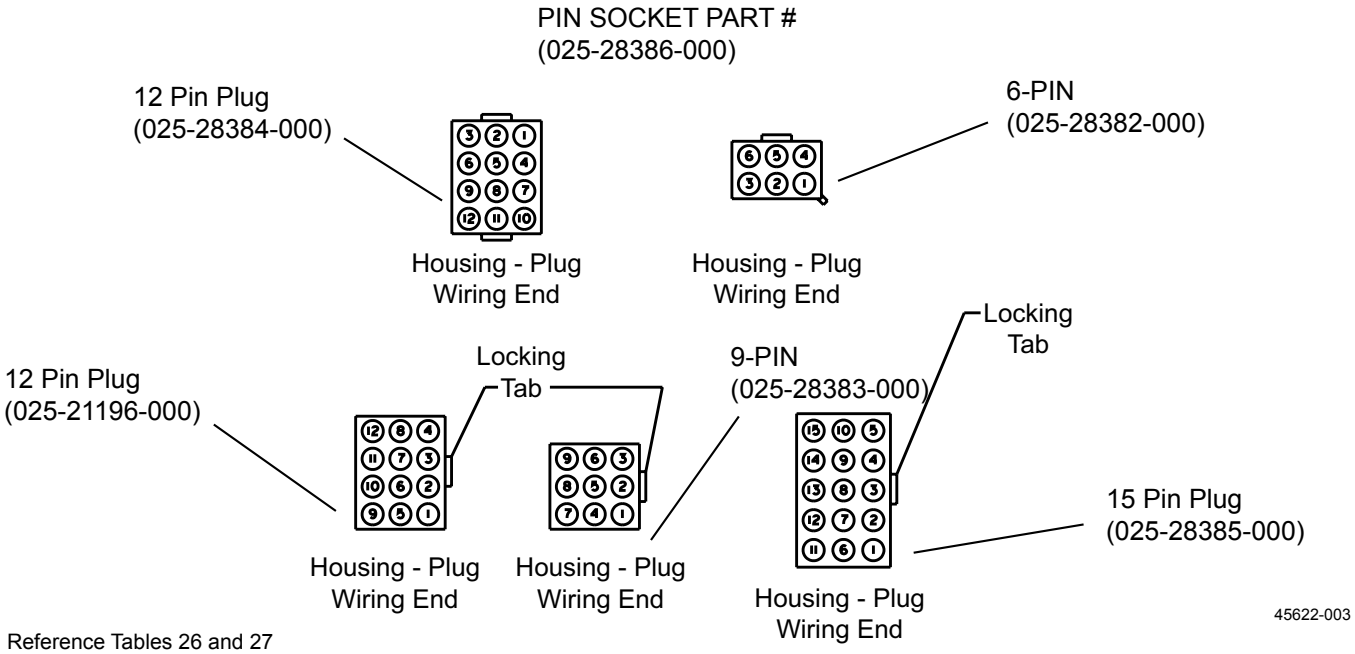

Reference Tables 26 and 27 starting on page 42

FIGURE 17 - SENSOR HOUSING & PIN SOCKET PART NUMBERS

TRANSDUCERS, PRESSURE CUTOUTS AND TEMP SENSORS

TABLE 28 - TRANSDUCERS, PRESSURE CUTOUTS AND TEMP SENSORS

ITEM	DESCRIPTION	MODELS	PART NUMBER	QUANTITY
1[S]	Sensor, Outside Air Temperature	All	025-47688-000	1
2[S]	Sensor, Entering Water Temp. (Not Shown)	All	025-47669-000	1
3[S]	Sensor, Leaving Water Temp. (Not Shown)	All	025-47669-000	1
4	Compound, Heat Conductive*	All	013-00898-000	-
20[S]	Transducer, Suction Pressure (0-400psi)	All	025-41756-002	2
21[S]	Transducer, Discharge Pressure (0-650psi)	All	025-41756-003	2

s See Recommended Spare Part
* Note: Used with items 2 and 3.
See *Figure 18 on page 45*

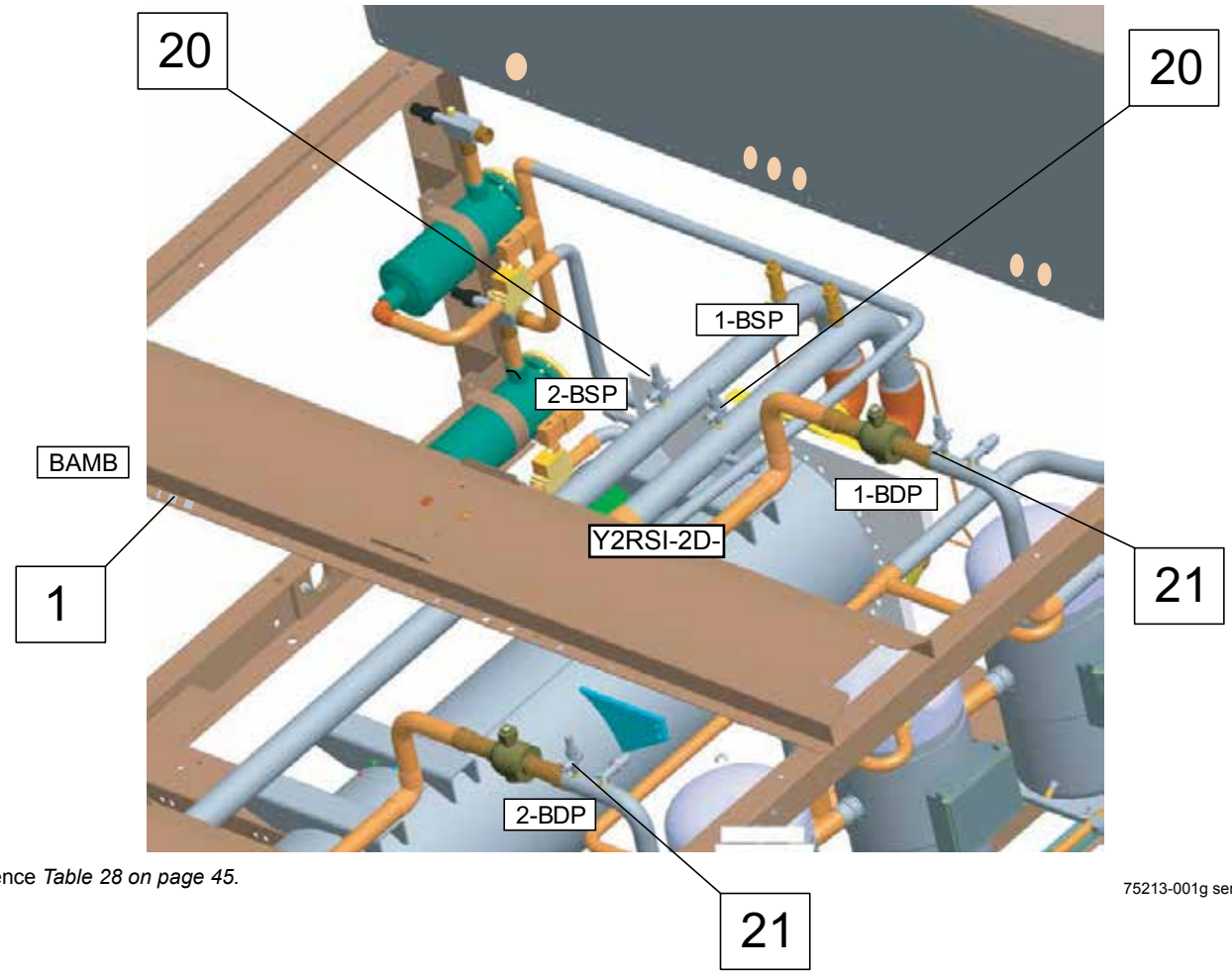

Reference *Table 28 on page 45.*

75213-001g sensor

FIGURE 18 - TRANSDUCERS, PRESSURE CUTOUTS AND TEMP SENSORS

TRANSDUCER AND THERMISTOR WIRE HARNESS CONNECTORS - FIELD REPLACEMENT PART NUMBERS

TABLE 29 - TRANSDUCER AND THERMISTOR WIRE HARNESS CONNECTORS - FIELD REPLACEMENT PART NUMBERS

ITEM	LOCATION	DESCRIPTION	PINS	PART NUMBER
1	Transducer	(0-200 psis)	3 Pin End	025-41756-001
		(0-400 psis)		025-41756-002
		(0-650 psis)		025-41756-003
		(0-150 psis)		025-41756-004
		(0-175 psis)		025-41756-005
2	Wire Harness	Plug Connector	3 Pin End	025-41761-000
3		Contact Pins		025-41812-000
4	Temperature Sensor	Plug Connector	2 Pin End	025-28948-000
5		Contact Pins		025-28949-000
6		Rubber Collar		025-28950-000
7	Wire Harness	Plug Connector	2 Pin End	025-28951-000
8		Contact Pins		025-28952-000
9		Rubber Collar		025-28950-000

See *Figure 19 on page 46*

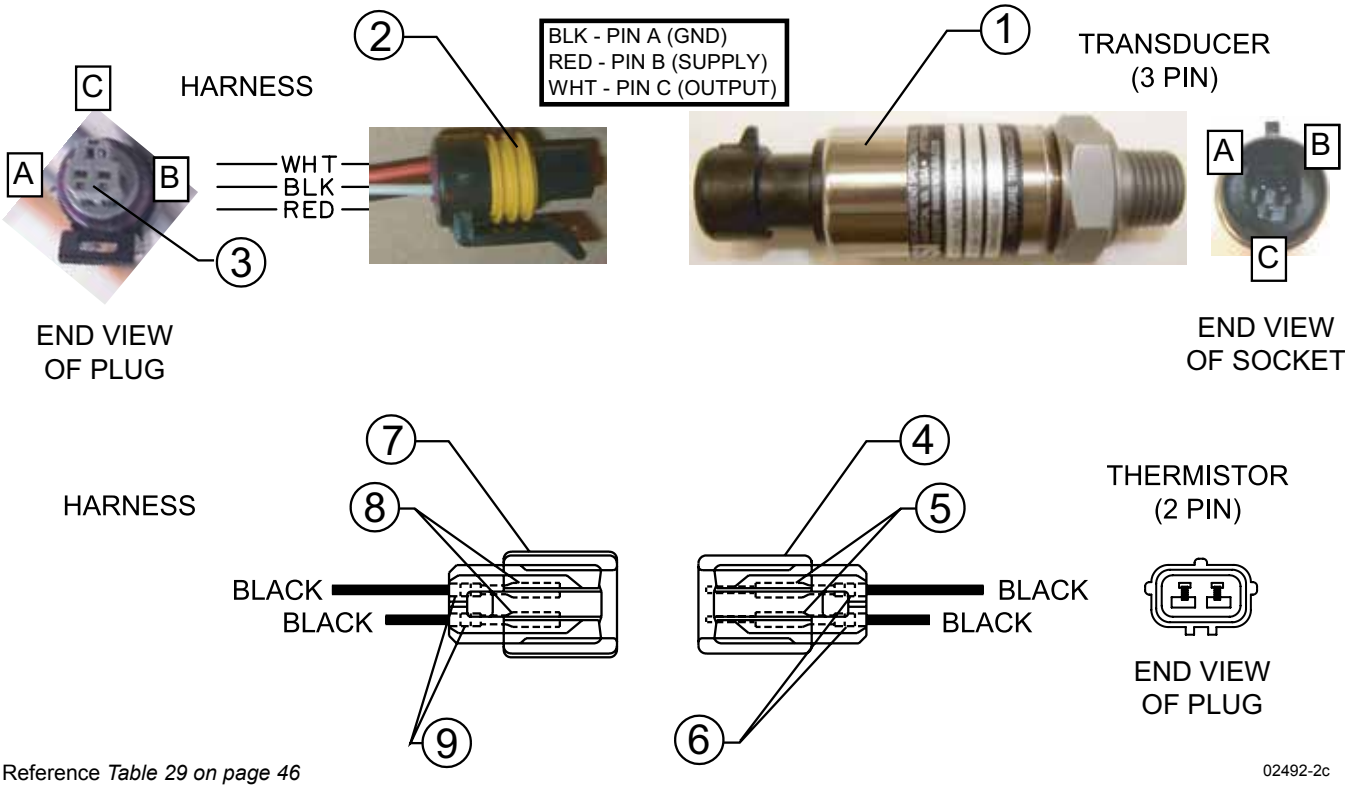

Reference *Table 29 on page 46*

FIGURE 19 - TRANSDUCER AND THERMISTOR WIRE HARNESS CONNECTORS - FIELD REPLACEMENT PART NUMBERS

VIBRATION ISOLATORS

TABLE 30 - VIBRATION ISOLATORS PART NUMBERS

ONE INCH DEFLECTION SPRING ISOLATOR CROSS REFERENCE*				
WEIGHT RANGE (LBS.)	**WEIGHT RANGE (KG.)**	**VENDOR PART NUMBER**	**COLOR**	**YORK PART NUMBER**
Up to 435 lbs.	Up to 197 kg.	CP-1D-510	BLACK	029-25334-002
435 to 766 lbs.	197 to 347 kg.	CP-1D-900	DARK GREEN	029-25334-003
766 to 1021 lbs.	347 to 463 kg.	CP-1D-1200	GRAY	029-25334-004
1021 to 1157 lbs.	463 to 525 kg.	CP-1D-1360	WHITE	029-25334-005
1157 to 1785 lbs.	525 to 810 kg.	CP-1D-1785N	GRAY/RED	029-25334-006
WEIGHT RANGE (LBS.)	**WEIGHT RANGE (KG.)**	**VENDOR PART NUMBER**	**COLOR**	**YORK PART NUMBER**
Up to 1149 lbs.	Up to 521 kg.	C2P-1D-1350	DARK PURPLE	029-25334-008
1149 to 1531 lbs.	521 to 694 kg.	C2P-1D-1800	DARK GREEN	029-25334-009
1531 to 2041 lbs.	694 to 926 kg.	C2P-1D-2400	GRAY	029-25334-010
2041 to 2313 lbs.	926 to 1049 kg.	C2P-1D-2720	WHITE	029-25334-012
2313 to 3570 lbs.	1049 to 1619 kg.	C2P-1D-3570N	GRAY/ RED	029-25334-013
NEOPRENE ISOLATOR CROSS REFERENCE				
WEIGHT RANGE (LBS.)	**WEIGHT RANGE (KG.)**	**VENDOR PART NUMBER**	**COLOR**	**YORK PART NUMBER**
Up to 826 lbs.	Up to 375 kg.	RD-3	CHARCOAL	029-25335-001
826 to 1689 lbs.	375 to 766 kg.	RD-4	BRICK RED	029-25335-002
1689 to 4000 lbs.	766 to 1814 kg.	RD-4	CHARCOAL	029-25335-004
TWO INCH DEFLECTION, SEISMIC SPRING ISOLATOR CROSS REFERENCE				
WEIGHT RANGE (LBS.)	**WEIGHT RANGE (KG.)**	**VENDOR PART NUMBER**	**COLOR**	**YORK PART NUMBER**
Up to 392 lbs.	Up to 178 kg.	Y2RSI-2D-460	GREEN	029-25336-006
392 to 605 lbs.	178 to 274 kg.	Y2RSI-2D-710	DARK BROWN	029-25336-008
605 to 741 lbs.	274 to 336 kg.	Y2RSI-2D-870	RED	029-25336-009
741 to 1021 lbs.	336 to 463 kg.	Y2RSI-2D-1200N	RED/BLACK	029-25336-010
1021 to 1438 lbs.	463 to 652 kg.	Y2RSI-2D-1690	PINK	029-25336-011
1438 to 2245 lbs.	652 to 1018 kg.	Y2RSI-2D-2640N	PINK/GRAY	029-25336-012
2245 to 2619 lbs.	1018 to 1188 kg.	Y2RSI-2D-2870N	PINK/GRAY/ORANGE	029-25336-013
2619 to 3740 lbs.	1188 to 1697 kg.	Y2RSI-2D-3280N	PINK/GRAY/DARK BROWN	029-25336-014

* **NOTE:** One Inch Deflection Spring Isolators must all be of the same class for the entire unit. Must use C2P's at all locations on a selected unit, or all CP's.

YLAA CHILLER OPTIONS - KITS

TABLE 31 - FIELD INSTALLED OPTIONS PART NUMBERS

MODEL NUMBER YLAA	CHICAGO RELIEF VALVE	FLOW SWITCH	DIFFERENTIAL PRESSURE SWITCH	VICTAULIC FLANGE KIT	ACOUSTIC SOUND BLANKET KIT	HOTGAS BY-PASS SOLENOID VALVE W/ HARNESS
MODEL #	**022-10682**	**024-39397**	**025-30919**	**023-**	**310-06507**	**375-76061**
0070	-001	-000	-000	19049-000	-724	-100
0080					-725	-200
0090				19046-000	-726	-300
0091				19049-000	-727	-400
0100					-728	
0101						
0115					-200	-500
0120				19046-000		-600
0125				19049-000		-650
0135				19046-000	-729	-700
0141						-750
0150					-730	-700
0155						-800
0156						-000
0170					-600	
0175						-900

TABLE 32 - CONTROL TRANSFORMER KIT

MODEL NUMBERS	VOLTAGE	DESCRIPTION	KIT PART NUMBER	XFMR ONLY
YLAA0070-YLAA0175	-17	KIT, CONTROL TRANSFORMER 2.0 KVA	375-76528-101	025-29627-002
	-28		375-76528-102	025-29627-002
	-40		375-76528-103	025-29627-002
	-46		375-76528-104	025-29627-002
	-58		375-76528-105	025-29627-004

ENCLOSURE KIT OPTIONS

TABLE 33 - ENCLOSURE KIT OPTIONS

<table>
<tr><th>MODEL NUMBER YLAA-</th><th>WIRE ENCLOSURE</th><th>LOUVERED ENCLOSURE</th><th>WIRE / LOUVERED ENCLOSURE</th><th>LOUVERED ENCLOSURE CONDENSER ONLY</th><th>LOUVERED ENCLOSURE HAIL GUARD ONLY</th></tr>
<tr><td>0070</td><td rowspan="3">475-75917-301</td><td rowspan="3">475-75918-301</td><td rowspan="3">475-75917-303</td><td rowspan="3">475-75918-303</td><td rowspan="15">475-75918-104</td></tr>
<tr><td>0080</td></tr>
<tr><td>0090</td></tr>
<tr><td>0091</td><td rowspan="5">475-75917-201</td><td rowspan="4">475-75918-201</td><td rowspan="5">475-75917-203</td><td rowspan="5">475-75918-203</td></tr>
<tr><td>0100</td></tr>
<tr><td>0101</td></tr>
<tr><td>0115</td></tr>
<tr><td>0120</td><td>475-75918-202</td></tr>
<tr><td>0125</td><td rowspan="2">475-75917-101</td><td rowspan="2">475-75918-101</td><td rowspan="2">475-75917-103</td><td rowspan="5">475-75918-103</td></tr>
<tr><td>0135</td></tr>
<tr><td>0141</td><td>475-75917-102</td><td>475-75918-102</td><td>475-75917-104</td></tr>
<tr><td>0150</td><td>475-75917-101</td><td>475-75918-101</td><td>475-75917-103</td></tr>
<tr><td>0155</td><td>475-75917-102</td><td>475-75918-102</td><td>475-75917-104</td></tr>
<tr><td>0156</td><td rowspan="3">475-75917-401</td><td rowspan="2">475-75918-401</td><td rowspan="3">475-75917-403</td><td rowspan="3">475-75918-403</td></tr>
<tr><td>0170</td></tr>
<tr><td>0175</td><td>475-75918-402</td></tr>
</table>

See Figures 20 and 21 starting on page 50.

ENCLOSURE KIT OPTIONS (CONT'D)

TABLE 34 - WIRE ENCLOSURE

WIRE ENCLOSURE		YLAA0070, 0080 & YLAA0090		YLAA0091, 0100, 0101, 0115 & YLAA0120		YLAA0125, 0135, 0141, 0150 & YLAA0155		YLAA0156, 0170 & YLAA0175	
ITEM	**DESCRIPTION**	**475-75917-30X**	**QTY**	**475-75917-20X**	**QTY**	**475-75917-10X**	**QTY**	**475-75917-40X**	**QTY**
1	WIRE GRILLE	026-45058-007	4	026-45058-007	6	026-45058-007	8	026-45058-007	8
3	WIRE GRILLE	026-45058-008	2	026-45058-008	2	026-45058-008	2	026-45058-008	2
4	WIRE GRILLE	026-45058-001	4	026-45058-001	6	026-45058-001	8	026-45058-001	8
5	WIRE GRILLE	026-45058-005	4	026-45058-005	4	026-45058-005	4	026-45058-005	4
21	WIRE GRILLE	026-45058-009	2	N/A	-	N/A	-	026-45058-012	2
22	WIRE GRILLE	026-45058-010	2	N/A	-	N/A	-	026-45058-011	2

See *Figure 20 on page 50*

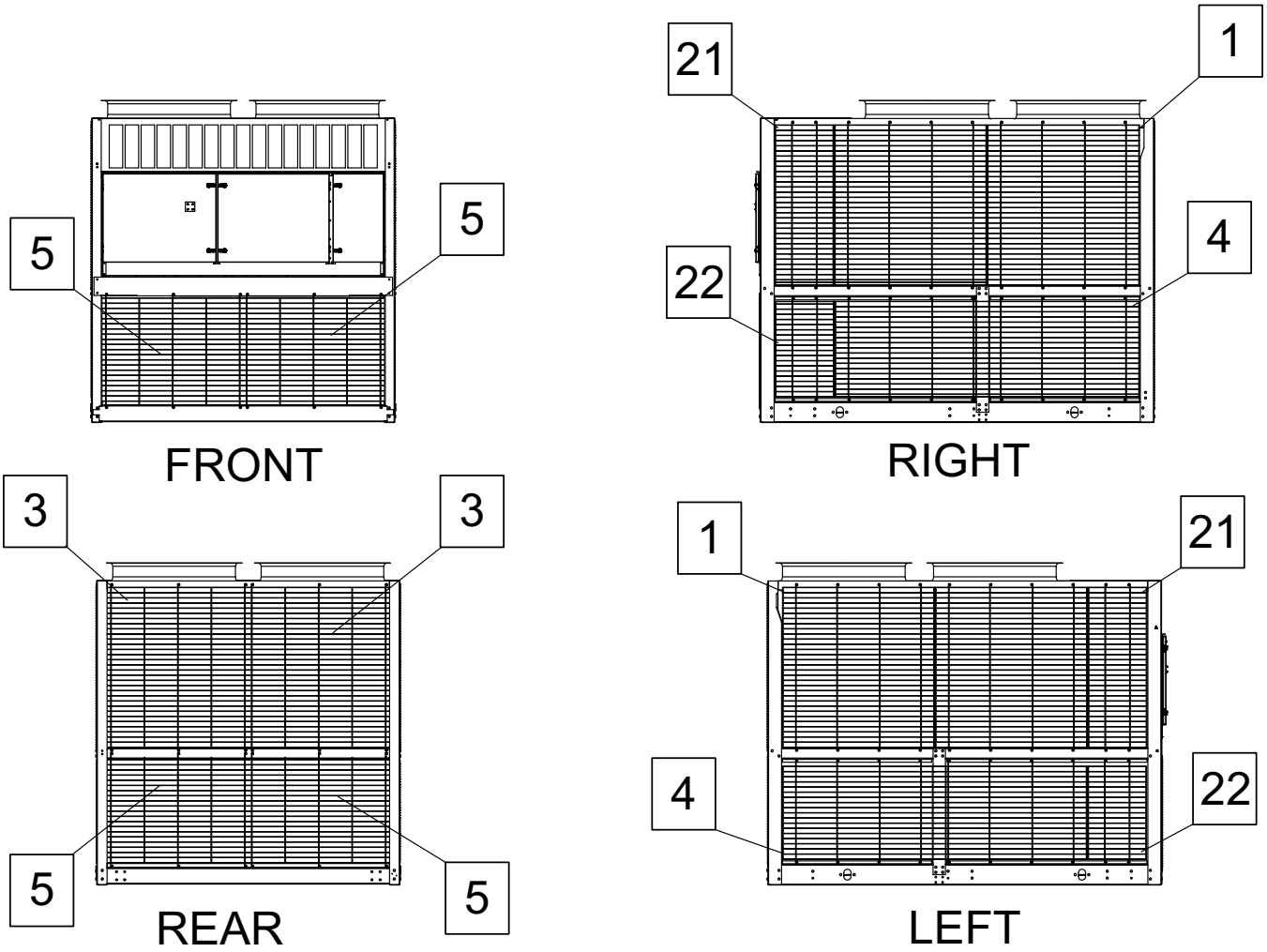

Reference *Table 34 on page 50*

75917-300-1

FIGURE 20 - WIRE ENCLOSURE - MODELS YLAA0070, YLAA0080 & YLAA0090 SHOWN

ENCLOSURE KIT OPTIONS (CONT'D)

TABLE 35 - LOUVERED ENCLOSURE

WIRE ENCLOSURE		YLAA0070, 0080 & YLAA0090		YLAA0091, ,0110, 0101, 0115 & YLAA0120		YLAA0125, 0135, 0141, 0150 & YLAA0155		YLAA0156, 0170 & YLAA0175	
ITEM	**DESCRIPTION**	**475-75918-30X**	**QTY**	**475-75918-20X**	**QTY**	**475-75918-10X**	**QTY**	**475-75918-40X**	**QTY**
1	LOUVERED PANEL	075-75918-003	4	075-75918-003	6	075-75918-003	8	075-75918-003	8
3	LOUVERED PANEL	075-75918-006	2	075-75918-006	2	075-75918-006	2	075-75918-006	2
4	LOUVERED PANEL	075-75918-001	1	075-75918-001	4	075-75918-001	6	075-75918-008	6
5	LOUVERED PANEL	075-75918-004	4	075-75918-004	4	075-75918-004	4	075-75918-004	4
25	LOUVERED PANEL	075-75918-012	2	N/A	-	N/A	-	N/A	-
26	LOUVERED PANEL	075-75918-007	1	N/A	-	N/A	-	N/A	-
27	LOUVERED PANEL	075-75918-010	1	075-75918-021	1	075-75918-021	1	075-75918-025	1
28	LOUVERED PANEL	075-75918-012	1	075-75918-015	1	075-75918-015	1	075-75918-023	1
29	PANEL	075-75918-013	1	075-75918-020	1	075-75918-020	1	075-75918-026	1
30	PANEL	075-75918-014	1	075-75918-017	1	075-75918-017	1	075-75918-017	1

See *Figure 21 on page 51*

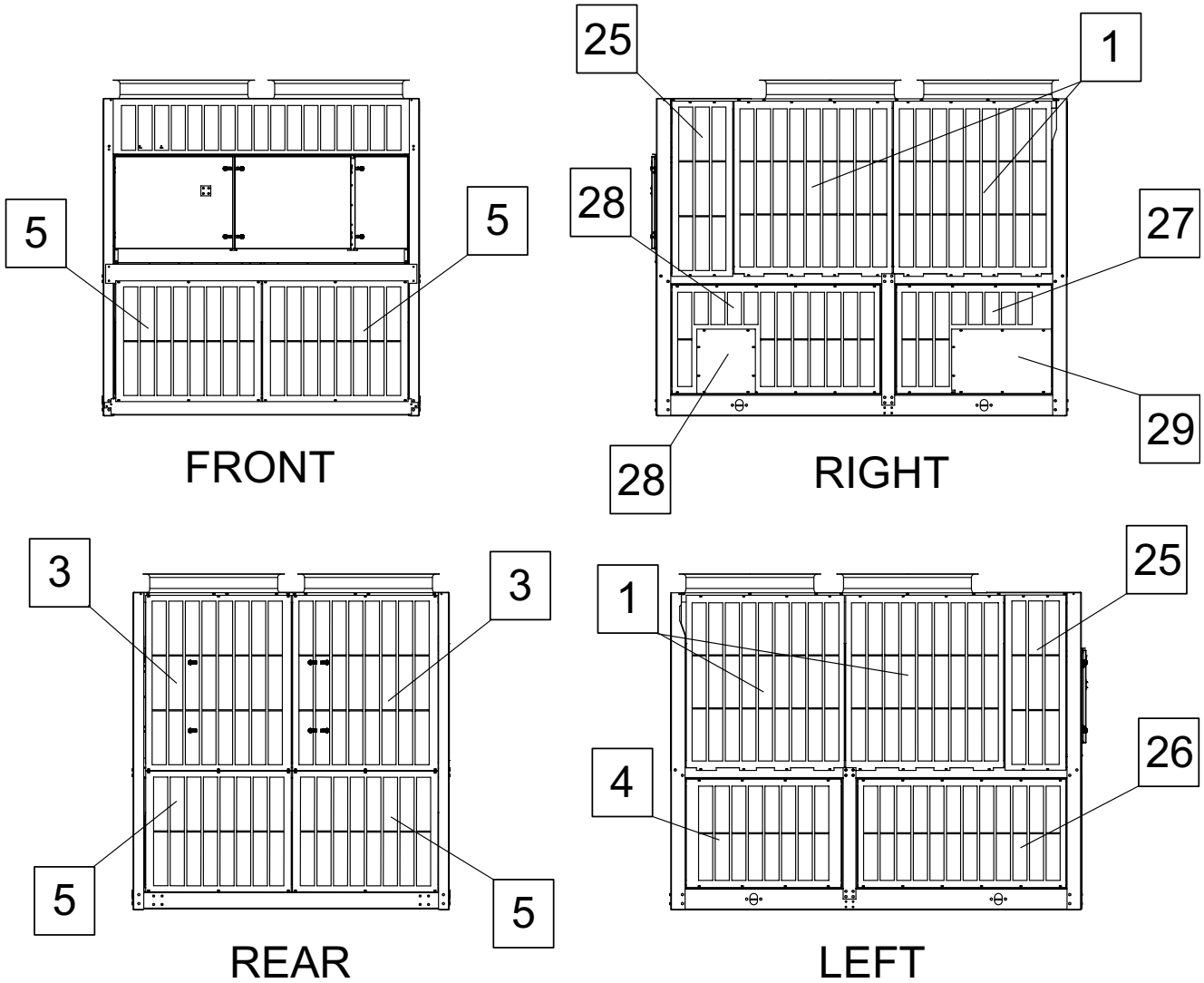

Reference *Table 35 on page 51*

75918-300-1

FIGURE 21 - LOUVERED ENCLOSURE

RECOMMENDED SPARE PARTS

York Model YLAA Styles A, B & C Air Cooled Hermetic Scroll Chillers
Suggested Spare Parts List for Critical Duty Applications

TABLE 36 - RECOMMENDED SPARE PARTS - YLAA0070-YLAA0175 CHILLERS

PAGE REF. & ITEM NUMBER	DESCRIPTION	MODEL NUMBER YLAA	PART NUMBER
Page 13, Item 1	Fan Motor (Standard)	-17	024-27322-103
		-28	024-27322-106
		-40	024-27322-104
		-46	024-27322-107
		-58	024-27322-102
Page 13, Item 1	Fan Motor (Low Noise)	-17	024-34980-002
		-28	024-34980-002
		-40	024-34980-005
		-46	024-34980-001
		-58	024-34980-003
Page 13, Item 2	Fan Blade (Standard)	All	026-35605-000
	Fan Blade (Low Noise)	All	026-45002-000
Page 14 and 15, Item 112 and 113	Valve, Thermal Expansion	See TABLE 4	025-40666-000
			025-40681-000
			025-40900-000
			025-40900-004
			025-40900-008
Page 14 and 15, Item 119	Core, Dehydrator	All	026-37540-000
Page 21, Item OIL	Oil, Compressor (Type 'V')	R-410A	011-00948-000
Page 40, Item 2A	Micro / IO Board Kit	All	331-02550-101
Page 40, Item 2B	Flashcard	All	031-02755-003
Page 44, Item 1 *	Sensor, Outside Air Temperature	All	025-47688-000
Page 44, Item 2	Sensor, Entering Water Temperature	All	025-47669-000
Page 44, Item 3	Sensor, Leaving Water Temperature	All	025-47669-000
Page 44, Item 20	Transducer, Suction Pressure (0-400psi)	All	025-41756-002
Page 44, Item 21	Transducer, Discharge Pressure (0-650psi)	All	025-41756-003

*** NOTE:** If the ambient sensor is to be changed from 025-28663-001 to 025-47688-000, be sure to upgrade the chiller software accordingly with Version 4, 031-02755-004.

NOTES

5000 Renaissance Drive, New Freedom, Pennsylvania USA 17349
800-861-1001
www.johnsoncontrols.com
Subject to change without notice. Printed in USA
Copyright © by Johnson Controls 2017
ALL RIGHTS RESERVED
Form150.72-RP1 (1117)
Issue Date: November 17, 2017
Supersedes: 150.72-RP1 (114)