SIEMENS
Ingenuity for life

Modernizing automation and enabling reliable communication with the industry standard

Powered by openness, vendor neutrality, deterministic communication and real-time capabilities, PROFINET ensures reliable communication no matter the circumstance. The system is straightforward and user-friendly, yet delivers all information with a high level of detail. As our leading Industrial Ethernet standard for automation, PROFINET fulfills the requirements of critical applications within process automation and plays an essential role for oil and gas customers in the downstream sector.

Advantages

- Reliable data transmission 24/7 via redundant network structures
- Efficient, secured and fast data exchange on all levels
- Handling of very large quantity structures of 10,000 and more devices
- Integration of existing PROFIBUS networks

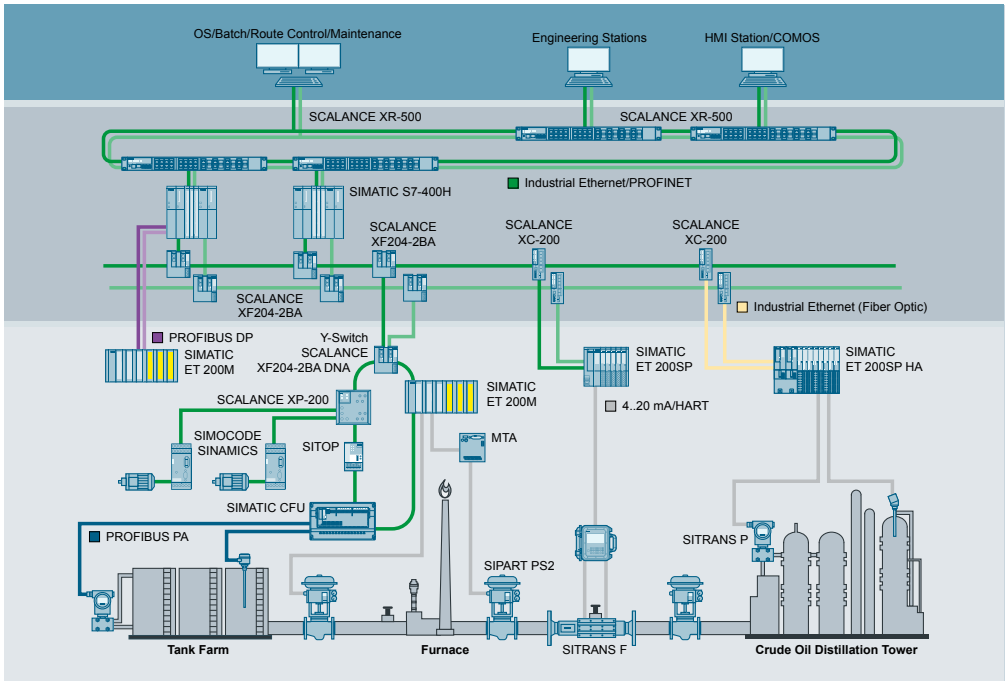

Products used for this application

- **Industrial Ethernet switches – SCALANCE X-200 for Process Automation**
  Designed for use in PROFINET networks, these switches meet the special requirements of the process industry.
- **Process instrumentation** Our comprehensive process instrumentation portfolio offers best-in-class transmit-ters for the widest range of applications.
- **Failsafe Controller – SIMATIC S7-400H**
  Specially designed for redun-dant and failsafe applications, the controller SIMATIC S7-400H offers reliable and scalable functions.
- **Distributed I/O – ET200SP HA**
  This solution reduces the footprint of the entire system, saving costs for space, air conditioning, and power re-quirements for the I/Os in the control panel.