Panasonic®

Flexible Wire-Saving System

S-LINK V

USER'S MANUAL

WUME-SLINKV-8

8th Edition

2018.10 | panasonic.net/id/pidsx/global

Contents

Before Using This System ····· 5
Introduction ····· 6
Warnings ····· 6
Instructions for Safe Use ····· 7
Ambient conditions ····· 7
Instructions for Designing ····· 8
Instructions for Use ····· 8
Fail-safe function ····· 8
Conformity to EC Directives ····· 8
Use with S-LINK system ····· 8
Instructions for Installation ····· 9
Instructions for Disposal ····· 9
Hook-up cable connectors ····· 9
Wiring ····· 9
Others ····· 9
Designing / Installation Procedures ····· 10

Chapter 1 Designing System ····· 13
System Configuration ····· 14
Outline of Design ····· 16
Selection of Controller or Control board ····· 16
I/O Control Points ····· 16
Transmission Distance ····· 16
Outputting Error Signals ····· 17
Connection of End Unit ····· 18
Selection of Control Cable and Connector Link Cable ····· 18
Control cable selection method: (For use of SL-VCU1 only) ····· 18
Connector link cable selection method: (For use of SL-VCU1 only) ····· 18
Making of Branch Lines Using Cable Connectors ····· 19
Calculation of Total Current Consumption Value ····· 20
Power Supply Capacity of System ····· 20
Example: Calculation of current consumption ····· 22
Calculation of Voltage Drop Value ····· 23
Rated voltage (V) ····· 23
Necessity of Local Power Supply Unit ····· 24
Designing of system using local power supply method ····· 24
Connection of DC 2-Wire Output Device to Input Unit ····· 26
Example: Connection of DC 2-wire sensor 27
Transmission Delay Time ····· 28
Response delay time ····· 28
Operation at power-on ····· 30
Error signal outputting delay time ····· 30
System setting time ····· 31
Selection of Output Holding Function for Output Unit ····· 32
Output holding function setting method ····· 32
Address Setting ····· 33
Setting of PLC I/O connector numbers ····· 33
Setting of I/O unit addresses ····· 33
Example: Address setting ····· 34

Chapter 2 Wiring ····· 35
Flowchart ····· 36
Basic Procedures ····· 37
Connector hook-up work ····· 37
Cutting of exclusive 4-core flat cable ····· 37
How to use exclusive hook-up pliers (SL-JPS, SL-JPC, SL-JPE) ····· 38
Hook-up of Connector ····· 39
Hook-up method of SL-JK connector for cable end and SL-JK1 connector for 'T'- branch ····· 39
Hook-up method of SL-J1A connector for 'T' - branch and SL-J3A connector for cable extension ····· 41
Hook-up method of SL-CP1, SL-CP2, and SL-CP3 snap male connectors and SL-CJ1 and SL-CJ2 snap female connectors ····· 44
Connection to Terminal Block ····· 46
Extension of Main / Branch Line Cable ····· 47
Extension of exclusive 4-core flat cables ····· 47
Extension of cable excluding exclusive 4-core flat cables ····· 47
Extension of cable to I/O device ····· 47
Installation ····· 48
Installation of each unit ····· 48
Power Supply ····· 50
Construction ····· 50
Power supply to system ····· 50
Connection of Each Unit ····· 51
Connection of controller ····· 51
Connection of bus direct-connection type controller and control board ····· 52
Connection of PLC I/O Connector ····· 53
Connection of I/O unit ····· 55
Connection of I/O device ····· 56
Connection of main line cable to end unit ····· 57
Connection of local power supply unit ····· 58
Local power supply to system ····· 58
Installation method of batteries ····· 59

Chapter 3 Starting System ····· 61
Flowchart ····· 62
Check before Starting ····· 64
Wiring Check ····· 64
Check of wiring conditions of controller and control board ····· 64
Check of PLC I/O connectors ····· 65
Check of cable for short-circuit ····· 65
Power-on (Main Power and Local Power) ····· 66
Starting ····· 66
CONFIG mode ····· 66
Check of Recognized Addresses ····· 70
CHECK mode ····· 70

Chapter 4 Specifications ····· 71
Specifications ····· 72
Common Specifications ····· 72
Address setting switches ····· 72
Specifications of Each Unit ····· 75
Controller ····· 75
Bus direct-connection type controller for FP2 / FP2SH Series ····· 79
Mitsubishi MELSEC-Q Series PLC bus direct-connection type controller ····· 83
Control board ····· 87
Control module ····· 91
PLC I/O connector ····· 93
I/O unit ····· 96
Input terminal ····· 99
Output terminal ····· 103
Connector input unit ····· 107
Connector output unit ····· 111
MIL connector input unit ····· 115
MIL connector output unit ····· 118
Analogue input unit ····· 121
Analogue output unit ····· 127
Relay output terminal ····· 132
Input module ····· 135
Output module ····· 137
Picking switch ····· 139
Picking switch for shutter ····· 142
Address setting remote controller ····· 145
End unit ····· 147
Handy monitor ····· 149
Cable ····· 153
Hook-up connector ····· 153
List of programmable logic controllers (PLC) (upper models) ····· 155
List of Models ····· 156
Controller ····· 157
Control board ····· 157
Control module ····· 157
List of I/O units ····· 158
List of connectors ····· 159
Handy monitor ····· 159
Address setting remote controller ····· 159
Others ····· 160

Chapter 5 Troubleshooting ····· 161
Troubleshooting ····· 162
Flowchart for taking corrective action for detected error ····· 162
Flowchart for power supply condition check · 165
How to identify error unit after error detection · 167
How to extinguish error indicator ····· 168
Utilization of output holding function ····· 168

Appendix ····· 169
Appendix ····· 170
List of error numbers ····· 170
Flowchart for error detection ····· 171
Selection of connector link cable ····· 172
Setting of connector numbers,addresses, and number of I/O control points ····· 176
Glossary ····· 177
FAX Sheet for Asking Question ····· 179

Before Using This System

Introduction

The **S-LINK V** is a flexible wire-saving that uses our original transmission system to enable high-speed and highly reliable signal transmissions.
Fully understand the functions and performance of this system before constructing this system.

This manual provides information necessary for construction of the **S-LINK V** flexible wire-saving system.
Before constructing the **S-LINK V** system, carefully read this manual and fully understand the system.
In addition, be sure to observe the cautions, and correctly use the system.
The controllers listed below have their own user's manuals.
For a detailed description, refer to that documentation.
SL-VGU1-C, **SL-VGU1-D** : **SL-VGU1-C** / **SL-VGU1-D** User's Manual
SL-VGU1-EC : **SL-VGU1-EC** User's Manual
SL-VGU1-485 : **SL-VGU1-485** User's Manual
For other controllers, refer to the instruction manuals enclosed with the controllers.

EtherCAT® is registered trademark and patented technology, licensed by Beckhoff Automation GmbH, Germany.

Warnings

This manual uses three types of warnings depending on the hazard level. They are '**DANGER**,' '**WARNING**,' and '**CAUTION**.' To safely use the **S-LINK V** system, be sure to observe these warnings.

⚠ DANGER

'**DANGER**' indicates that mishandling of this system may result in death or serious injury, and this word is limitedly used in the extremely hazardous situations.

⚠ WARNING

'**WARNING**' indicates that mishandling of this system may result in death or serious injury.

⚠ CAUTION

'**CAUTION**' indicates that mishandling of this system may result in injury or damage of the system.

NOTE 'NOTE' provides caution or information to you in order to prevent operation errors.

Remarks

1) Panasonic Industrial Devices SUNX Co., Ltd. holds the copyright of this document. For this reason, do not copy this document without our permission.
2) The contents of this document may be subject to change without prior notice for the reasons of improvement.
3) The product specifications shown in this document were determined in October 2018.

Instructions for Safe Use

⚠ WARNING

The **S-LINK V** system does not have any control functions, such as accident preventive function and safety function. For this reason, do not use the **S-LINK V** system if malfunction of the system may affect human lives or assets.
Even if this system is not used as an accident preventive system or safety system, if this system is used for a nuclear power control system, railroad facility, aviation facility, vehicle, combustion system, medical equipment, or the like, be sure to design a system having enough capacity, and adopt safety measures for the system, such as a fail-safe function. In addition, please contact our sales division.

Ambient conditions

Do not use this system at the following places:

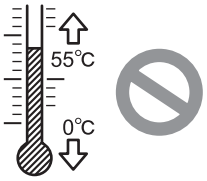

Place where the ambient temperature is out of the specified range of 0 to +55°C (Note 1)

Notes:
1) The optimum ambient temperature depends on the product type. For this reason, check the specifications of this product shown in Chapter 4.
2) If this product is incorporated in the control box together with the other unit, the unit may generate heat to change the ambient temperature. In this case, install a cooling fan so that the ambient temperature cannot exceed the rated upper limit temperature.

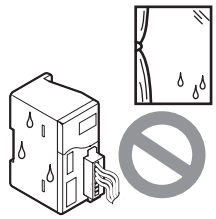

Place where the ambient temperature extremely varies and dew condensation may be caused.

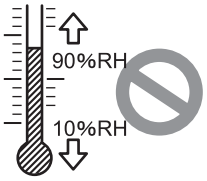

Place where the ambient humidity is out of the specified range of 35 to 85% RH (Note)

Note
The optimum ambient humidity depends on the product type. For this reason, check the specifications of this product shown in Chapter 4.

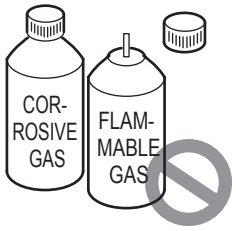

Place where there is a corrosive or flammable gas

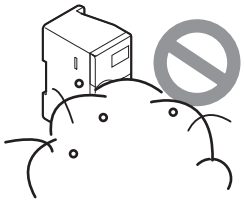

Steamy or dusty place or place near water, oil, or chemical source

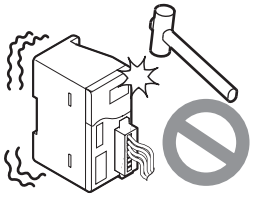

Place where vibration or shock of more than the specified level may be directly applied to the system main body

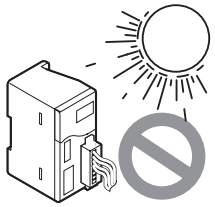

Place where direct sunlight may enter

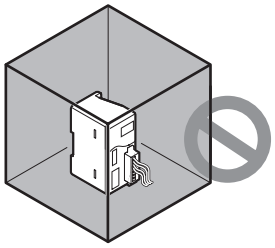

Closed place
However, if a ventilation hole or a fan is installed, such a place can be used.

Instructions for Use

Instructions for Designing

Fail-safe function

⚠ CAUTION

Disconnection of a signal line, instantaneous power failure, or abnormal signal may cause a problem. For this reason, please adopt a fail-safe function for the entire system by yourself.
To ensure safety, be sure to incorporate the interlock circuit, limit circuit, or the like, in the external circuit excluding the **S-LINK V** system circuit.

To incorporate the **S-LINK V** system in your equipment, be sure to adopt a fail-safe function.
Regarding the fail-safe function, if you have an unclear or doubtful point, please contact our sales division.

Conformity to EC Directives

⚠ WARNING

- Each unit of the **S-LINK V** series conforms to various standards. However, to incorporate a unit in the system, check that entire system can conform to various standards.
- The lightning surge preventive function is not adopted for the I/O module (**SL-VM□** / **VMP□**). To conform to the requirements of EN 61000-6-2, incorporate the following circuit in your board.

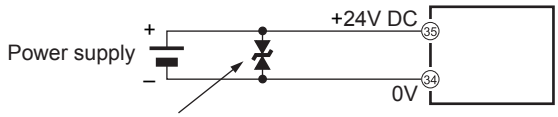

Surge absorber
Recommended part: ERZV05D390 manufactured by Panasonic Corporation (Note)

Note: If a different part is used, a resistor may be needed between the power supply unit and the surge absorber. Check whether a resistor is needed.

- If it is not necessary for the relay output terminal (**SL-VTPR4/8**) to conform to the EC Directives, use of 250V AC, 3A is possible.

To conform to the EC Directives, the **S-LINK V** system is tested in accordance with the EMC Directive standards, such as EN 61000-6-4 of the EMI standard and EN 61000-6-2 of the EMS standard. When you incorporate the **S-LINK V** system in your machine or equipment, check that the wiring condition conforms to the requirements of the EC Directives.
To use the **SL-VGU1-C** together with the PLC (programmable logic controller) manufactured by Mitsubishi Electric Corporation and to conform to the requirements of the EMC Directive, install the system in accordance with the PLC User's Manual prepared by Mitsubishi, and be sure to observe the following items:

- Be sure to put the PLC and the **SL-VGU1-C** in a conductive box.
- Be sure to ground the shielded cable that connects the PLC to the **SL-VGU1-C** in the 300mm area of the **SL-VGU1-C**.
- If the shielding effect is not enough, install a ferrite core.

Use with S-LINK system

The **S-LINK V** system cannot be used together with the **S-LINK** system. Use with a system may cause abnormal operation or damage. Separately construct the **S-LINK V** system and the **S-LINK** system.
However, if gateway controllers are used as the child station of the open network (CC-Link, DeviceNet, RS-485 / RS-232C, EtherCAT), 2 systems can be used together on the same network.

Not good

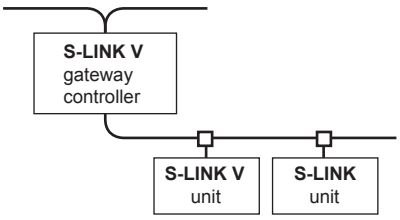

Good

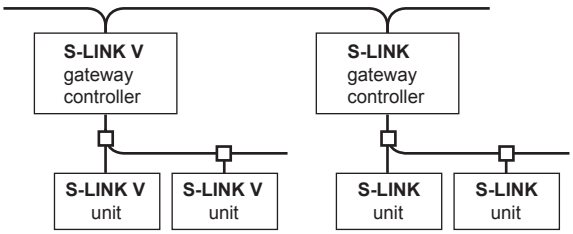

Instructions for Installation

⚠ CAUTION

- Select a power supply unit equipped with the short-circuit protective function (fuse, etc.).
- The power of the **S-LINK V** system passes through the inside of each unit and is then supplied to the main cable or I/O device side. However, the short-circuit protective function is not adopted for this power supply circuit. For this reason, adopt a short-circuit protective function, such as a fuse, for the power supply circuit.
- Take care that wrong wiring will damage the product.
- Before starting the following works, be sure to turn off the power of the PLC (programmable logic controller), personal computer main body, **S-LINK V** units, and also turn off the power supply unit of the I/O device.
  - Machine assembly (installation)
  - Removal or reinstallation of a **S-LINK V** unit or connection of I/O device
  - Cable connection
  - Address setting / change
- Before handling this product, remove any electrostatic charge that may be present on your body. There is a danger of this product getting damaged due to the electrostatic charge.

Hook-up cable connectors

To hook-up an exclusive cable connector, use the exclusive tool, and correctly hook-up the connector by following the procedure specified in this manual.
If a connector is not correctly hooked-up, the **S-LINK V** system will not operate.
In addition, observe the following items:

- After checking the cable type and the purpose, select the right type of connector.
- Before hook-up a connector, be sure to check the colors of cables to be connected.
- Use the exclusive hook-up pliers (**SL-JPS**, **SL-JPC** or **SL-JPE**) to hook-up the connectors.
  For the hook-up procedure of each connector, refer to pages 37 to 44.
- If a connector is once hooked-up, do not reuse the connector.
  The performance of such a connector may be deteriorated.

Wiring

Observe the following items to distribute cables:

- Keep cables away from the power line and the high-voltage line.
- Do not completely fold down any cables.
- Do not pull any cables with a strong force.
- Do not apply any weight to any cable.
- Do not touch a cable to any other system cables.
  This is because signals of different systems may interfere with each other.
- Do not bend cables many times.
- Wind insulation tape on the end of each cable, if necessary.

Others

- Apply the specified torque to tighten terminal screws of each unit.
- Check the connectors for looseness.
- Do not disassemble or modify this product.

Instructions for Disposal

- Request a waste disposal company to dispose of this product.

Designing / Installation Procedures

Chapter 1 Designing System

- Determine the system design.
  - Determine the necessary number of I/O points for the I/O device.
  - Determine the cable length necessary for transmission.
  - Select the transmission speed.
  - Set the address.
  - Calculate the power supply capacity of the system.
  - Determine the connection method for the input device of DC 2-wire output type.
  - Determine the transmission delay time.
  - Set the output holding function.

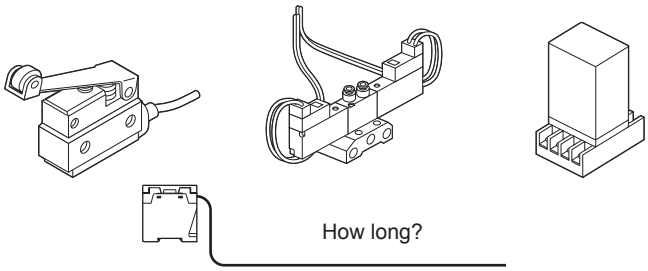

Chapter 2 Wiring

- This chapter describes the wiring methods to be used for actual installation.
  - Caution regarding cutting of exclusive 4-core flat cable
  - Connector hook-up method
  - Cable extension method
  - Connection to I/O device
  - Connection of local power supply unit
  - Connection to terminal block

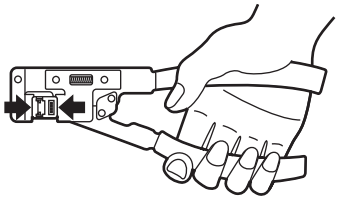

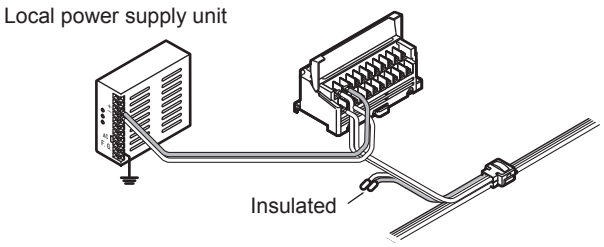

Chapter 3 Starting System

- Check the system before starting.
  - Check the cable for short-circuit.
  - Check the system before starting.
  - Caution regarding power-on
  - Description of CONFIG mode
  - Description of CHECK mode

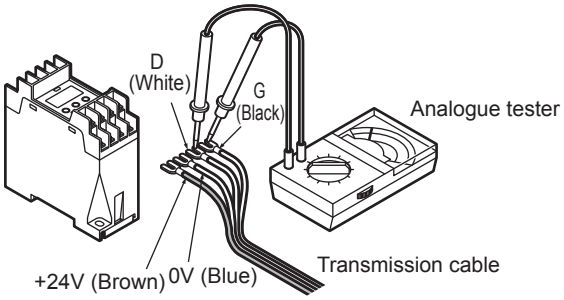

Chapter 4 Specifications

- Select **S-LINK V** units optimum for the purpose of your system.
  - **S-LINK V** control units
  - **S-LINK V** input units
  - **S-LINK V** output units
  - Hook-up connector
  - Exclusive 4-core flat cable

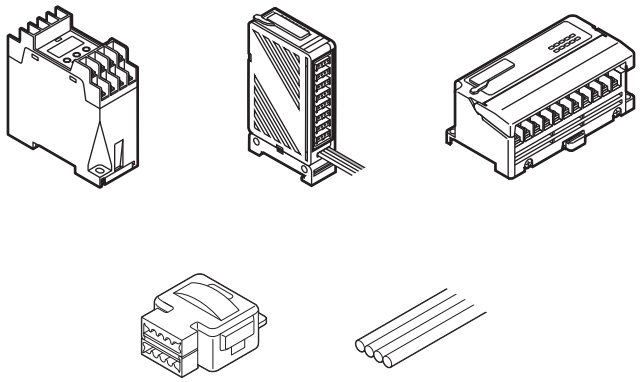

Chapter 5 Troubleshooting

- This chapter describes how to solve the problem if the **S-LINK V** system does not operate properly.
  - Troubleshooting after error indication
  - Power supply check procedure
  - How to extinguish the error indicators

Appendix

- List of error numbers
- Flowchart for error detection
- Selection of connector link cable for PLC
- Fax sheet for asking questions

This manual is prepared for the designer and the installer of the **S-LINK V** system. The following items are common to both the designer and the installer:

- **Before Using This System**
- '**Chapter 4 Specifications**'
- '**Chapter 5 Troubleshooting**'
- **Appendix**

In addition, the designer should refer to '**Chapter 1 Designing System**,' and the installer should refer to '**Chapter 2 Wiring**' and '**Chapter 3 Starting System**.'

MEMO

Chapter 1
Designing System

System Configuration

Example of system configuration

An example of the **S-LINK V** system is shown below.
For the specifications of each unit, refer to **Chapter 4**.

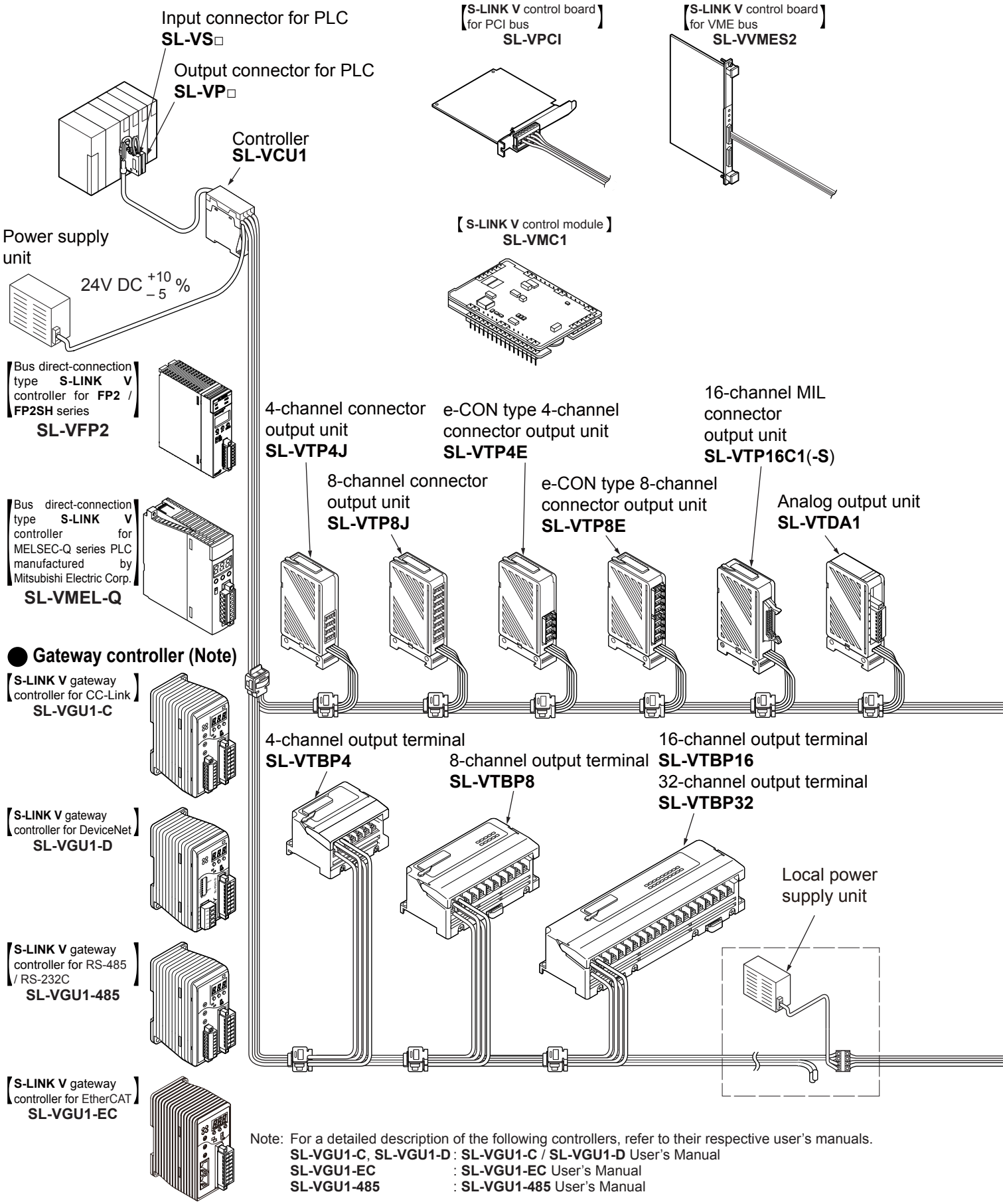

Note: For a detailed description of the following controllers, refer to their respective user's manuals.
SL-VGU1-C, **SL-VGU1-D** : **SL-VGU1-C** / **SL-VGU1-D** User's Manual
SL-VGU1-EC : **SL-VGU1-EC** User's Manual
SL-VGU1-485 : **SL-VGU1-485** User's Manual

● I/O module

LINK V
For flexible wire-saving system

【Input module】
SL-VM8 / VM16

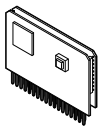

【Output module】
SL-VMP8 / VMP16

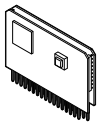

● Cables and hook-up connectors

【Exclusive 4-core flat cable】
SL-RCM100□ / RCM200

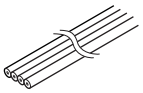

Flat cables are available so that 'T' - branch can be easily formed by using hook-up connectors.

【Hook-up connectors】

SL-CP□ **SL-CJ□** **SL-J1A** **SL-J3A**

SL-CP3 **SL-JK□**

There are various types of hook-up connectors that enable easy connection of cables.

● Picking switch

SL-VPK01 **SL-VPK02**

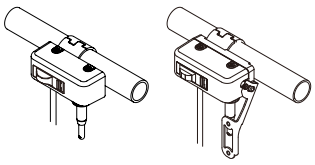

● Handy monitor

SL-VHM1

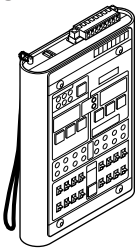

1-channel input unit **SL-VCH10**
2-channel input unit **SL-VCH20**
2-channel I/O mixed unit **SL-VCH21**

1-channel output unit **SL-VCH11**
2-channel output unit **SL-VCH22**

8-channel connector input unit **SL-VT8J**

e-CON type 4-channel connector input unit **SL-VT4E**

e-CON type 8-channel connector input unit **SL-VT8E**

16-channel MIL connector input unit **SL-VT16C1**

4-channel connector input unit **SL-VT4J**

Analog intput unit **SL-VTAD1**

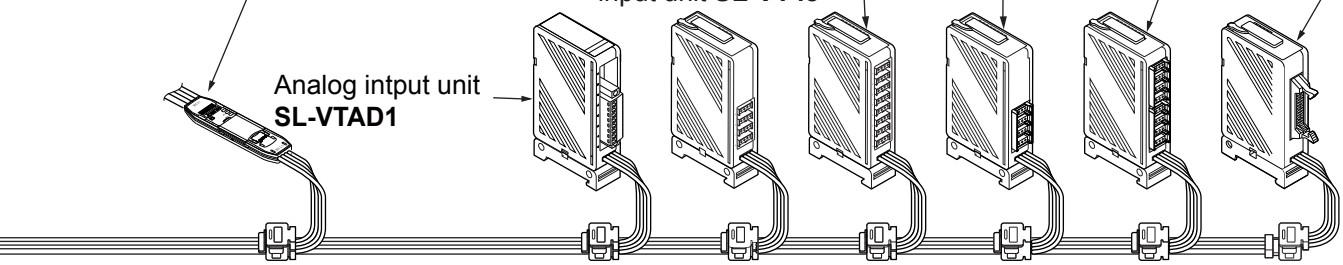

4-channel input terminal **SL-VTB4**

8-channel input terminal **SL-VTB8**

16-channel input terminal **SL-VTB16**
32-channel input terminal **SL-VTB32**

8-channel relay output terminal **SL-VTPR8**

4-channel relay output terminal **SL-VTPR4**

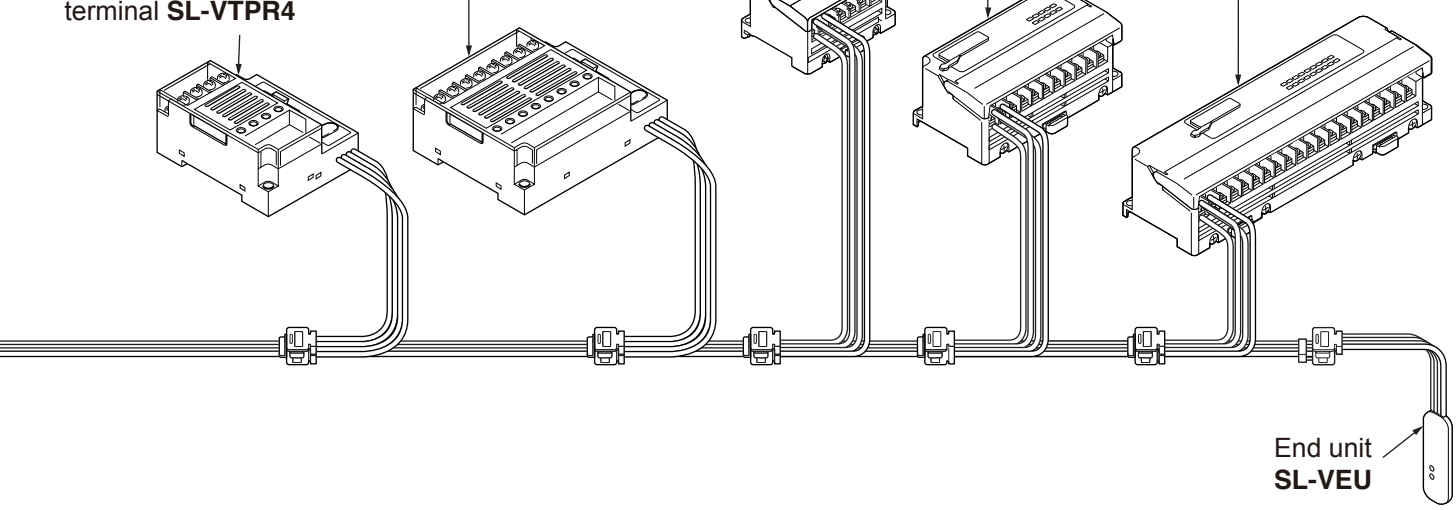

End unit **SL-VEU**

Chapter 1

Outline of Design

Selection of Controller or Control board

Select a **S-LINK V** controller or a **S-LINK V** control board optimum for the upper machines (PLC, PC, PCI bus computer, VME bus computer, open network).

I/O Control Points

The system needs the following I/O control points. Design the system considering these points.

- Each controller or control board can control up to 256 nodes (number of I/O units connected to the system) and 512 points (512 points × 2 for the **SL-VVMES2**). To control more than 512 points (512 points × 2 for the **SL-VVMES2**) of I/O device, connect two or more controllers as the other systems.
- To cope with various PLC connection types of various manufacturers, we can provide 8 types of PLC input connectors and 7 types of PLC output connectors. For a detailed description, refer to pages 155 and 156.
  Each PLC I/O connector has 32 points for any model.

> NOTE
> Each system needs one controller or one control board.
> Two or more controllers or control boards cannot be connected to one system.
> The above described number of I/O control points (512 points or 512 points × 2 for the **SL-VVMES2**) and the number of nodes (256 nodes) are the maximum values.
> This means that these values depend on the total cable length and the conditions of the connected machine (total current consumption, voltage drop, etc.).
> For a detailed description, refer to pages 17 to 23.

Transmission Distance

The following two types of cables can be used for the **S-LINK V** system.

- Exclusive 4-core flat cable (recommended cable)
- 4-core VCTF cable (0.3 to 2.0mm^2, non-shielded) commercially available

Note: The VCTF cable is the vinyl cabtyre cable that conforms to the requirements of JIS C 3306 'Polyvinyl chloride insulated flexible cords.'

To wire the **S-LINK V** system, use 4-core cables so that the wire system can consist of 2 power supply lines (+24V, 0V) and 2 signal transmission lines (D, G).

The cable length depends on the total cable length and the transmission distance.

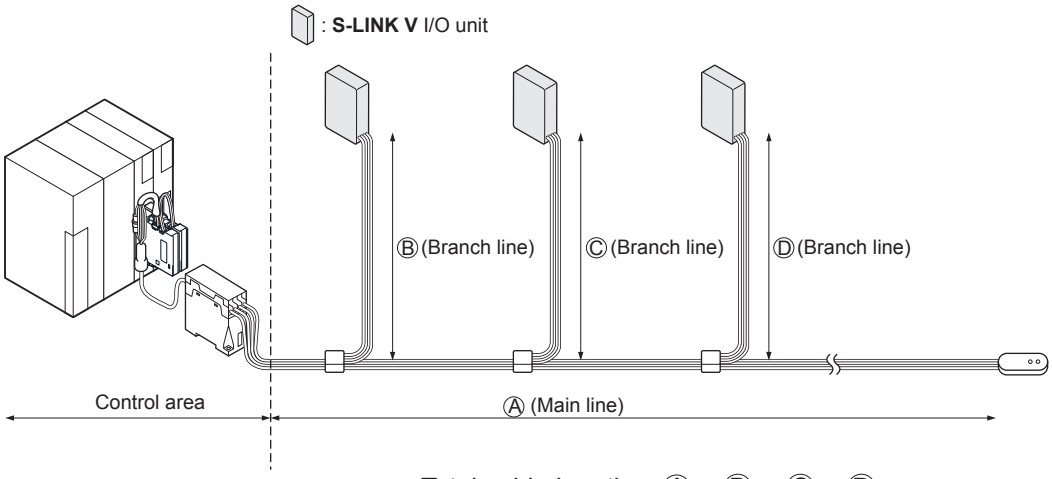

Total cable length = Ⓐ + Ⓑ + Ⓒ + Ⓓ

Transmission distance = Ⓐ

NOTE
- The main line is the longest route distributed from the controller or control board.
- The branch lines are the routes branched from the main line.

The total cable length should satisfy the conditions shown in the following table:

Transmission mode	Total cable length (m)
A	100
B	400
C	1,600

The maximum transmission distance (between D and G) is as follows:

- **Mode A: 50m**

  The maximum length is 50m regardless of the cable conductor cross section (0.3 to 2.0mm^2) and the number of nodes (1 to 256 nodes).

- **Mode B**

Conductor cross section (mm^2)	Number of nodes and maximum transmission length (m)	
	Up to 224 nodes	Up to 256 nodes
0.3	200 (full specification for mode B)	180
0.5		
0.75		
1.25		
2.0		

- **Mode C**

Conductor cross section (mm^2)	Number of nodes and maximum transmission length (m)							
	Up to 32 nodes	Up to 64 nodes	Up to 96 nodes	Up to 128 nodes	Up to 160 nodes	Up to 192 nodes	Up to 224 nodes	Up to 256 nodes
0.3	570	440	350	300	260	220	200	180
0.5		710	580	490	420	370	330	300
0.75				780	670	590	530	480
1.25	800 (full specification for mode C)							
2.0								

NOTE
- Voltage drop between +24V and 0V is not considered. For this reason, calculate this voltage drop value, and use a local power supply unit, etc. to prevent voltage drop.
  For a detailed description, refer to page 23.
- The conductor cross section of the exclusive 4-core flat cable **SL-RCM□** is 0.5mm^2.
- Wire the **S-LINK V** system while observing the communication distance specifications described above. In addition, use the cables that satisfy the specifications described above.
- To select applicable cables, refer to the section describing cables.
  For a detailed description, refer to page 153.
- The picking switch **SL-VPK0□** cannot be used in mode A (transmission mode).

Outputting Error Signals

If the controller is equipped with the error signal output function, the controller can output an error signal after detection of an error.
To output an error signal, the **S-LINK V** system will be turned on properly. If an error occurs, the NPN output transistor will be turned off.
For each type of error, you can select whether the error signal should be output.
For the Troubleshooting, refer to page 166.
For the error, refer to page 170.

Connection of End Unit

⚠ CAUTION

Each system needs at least 1 **SL-VEU** end unit. If the **SL-VEU** unit is not connected, the system may not operate properly.
If the cable lengths are the same, connect the end unit to the line having fewer nodes (units).

Be sure to connect 1 **SL-VEU** end unit to the end of the main line.
If the branch line length exceeds 80% of the maximum transmission distance, connect 1 **SL-VEU** unit to the end of the branch line, too.
Up to 2 **SL-VEU** end units can be connected for 1 system.

<If the branch line length is equal to the main line length>

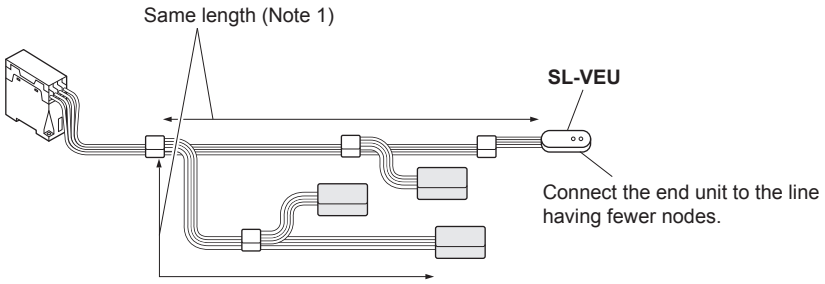

<If the branch line length is 80% of the main line length or more>

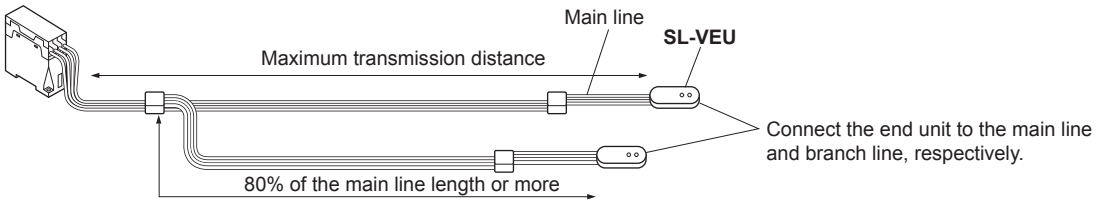

Notes: 1) The maximum transmission distance depends on the cable conductor cross section and the number of nodes.
For the maximum transmission distance, refer to page 17.
2) Even if the cable lengths are the same, if both the main and branch line lengths exceed 80% of the maximum transmission distance, connect two **SL-VEU** end units.

Selection of Control Cable and Connector Link Cable

Control cable selection method: (For use of SL-VCU1 only)

Check the distance from the **SL-VCU1** to the PLC I/O connector, and then select the applicable control cable: **SL-VC1000** (1m long) or **SL-VC2000** (2m long).
One control cable is needed for every 8 PLC I/O connectors.

Connector link cable selection method: (For use of SL-VCU1 only)

The PLC I/O connector installation direction (vertical) and layout depend on the PLC manufacturers.
Check the connection distance of the PLC I/O connector, and then select the applicable connector link cable: **SL-VF70** (70mm), **SL-VF150** (150mm), or **SL-VF250** (250mm).
For a detailed description, refer to page 172.

Making of Branch Lines Using Cable Connectors

Branch lines can be made by using connectors and terminal blocks.
In addition, for this product, cables or connectors that are commercially available can be used.

⚠ CAUTION

The exclusive hook-up connectors can connect the exclusive 4-core flat cables only.

	Exclusive 4-core flat cable	4-core VCTF cable commercially available (non-shielded) (Note)
Exclusive 4-core flat cable	Making of 'T' - branch line using exclusive hook-up connector **SL-J1A**…1	Intermediate connector commercially available or intermediate terminal block commercially available
	Extension using exclusive hook-up connector **SL-J3A**…2	
	Connection of branch line using exclusive hook-up connector **SL-JK1** and **SL-CP3**…3 **SL-JK** and **SL-CP3**…4	
4-core VCTF cable commercially available (non-shielded) (Note)	Intermediate connector commercially available…5 Intermediate terminal block commercially available…6	Intermediate connector commercially available or intermediate terminal block commercially available Note: Use the same diameter cable.

Note: The VCTF cord is the vinyl cabtyre cord that conforms to the requirements of JIS C 3306 'Polyvinyl chloride insulated flexible cords.'

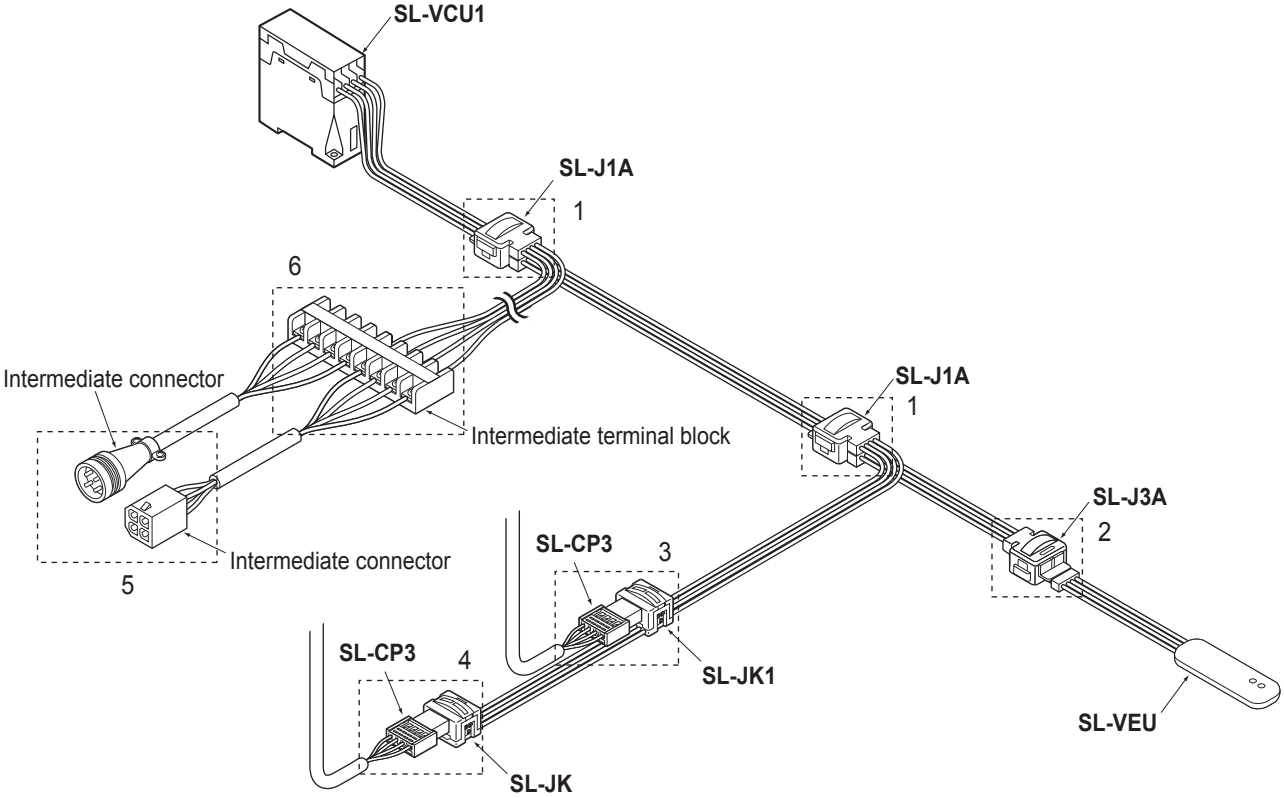

Power Supply Capacity of System

This section describes how to calculate the total current consumption value and voltage drop value in order to determine the power supply capacity (capacity of 24V DC power supply unit).

Calculation of Total Current Consumption Value

To determine the total current consumption, check the current consumption of each I/O unit.
Calculate the power supply capacity while referring to the list of current consumption values shown below.

Designation	Model No.	Current consumption (mA)
Controller	**SL-VCU1**	135
Bus direct-connection **S-LINK V** controller for **FP2** / **FP2SH** series	**SL-VFP2**	60
Mitsubishi MELSEC-Q PLC bus direct-connection **S-LINK V** controller	**SL-VMEL-Q**	70
Control board for PCI bus	**SL-VPCI**	85
Control board for VME bus	**SL-VVMES2**	88 (Note 1)
Control module	**SL-VMC1**	60
Gateway controller for CC-Link	**SL-VGU1-C**	300
Gateway controller for DeviceNet	**SL-VGU1-D**	300
Gateway controller for RS-485 / RS-232C	**SL-VGU1-485**	300
Gateway controller for EtherCAT	**SL-VGU1-EC**	300
Input connector for PLC	**SL-VS□**	30
Output connector for PLC	**SL-VP□**	73
End unit	**SL-VEU**	10
1-channel input unit	**SL-VCH10**	20
2-channel input unit	**SL-VCH20**	28
2-channel I/O mixed unit	**SL-VCH21**	24
1-channel output unit	**SL-VCH11**	16
2-channel output unit	**SL-VCH22**	20
4-channel connector input unit	**SL-VT4J**, **SL-VT4E**	70 (Note 2)
8-channel connector input unit	**SL-VT8J**, **SL-VT8E**	105 (Note 2)
16-channel MIL connector input unit	**SL-VT16C1**	80 (Note 2)
Analogue input unit	**SL-VTAD1**	80
8-channel input module	**SL-VM8**	18
16-channel input module	**SL-VM16**	20 (Note 2)
4-channel connector output unit	**SL-VTP4J**, **SL-VTP4E**	60 (Note 2)
8-channel connector output unit	**SL-VTP8J**, **SL-VTP8E**	90 (Note 2)
16-channel MIL connector output unit	**SL-VTP16C1**(**-S**)	50 (Note 2)
Analogue output unit	**SL-VTDA1**	90
8-channel output module	**SL-VMP8**	60
16-channel output module	**SL-VMP16**	95 (Note 2)
4-channel relay output terminal	**SL-VTPR4**	90 (Note 2, 3)
8-channel relay output terminal	**SL-VTPR8**	150 (Note 2, 3)
Picking switch	**SL-VPK01**	25
Picking switch for shutter	**SL-VPK02**	25 (when shutter operation: 450)
Handy monitor	**SL-VHM1**	500

Designation	Model No.	Current consumption (mA)	
		Unit side	I/O side (Note 4)
4-channel input terminal	**SL-VTB4**	25	45
8-channel input terminal	**SL-VTB8**	30	75
16-channel input terminal	**SL-VTB16**	35	150
32-channel input terminal	**SL-VTB32**	45	300
4-channel output terminal	**SL-VTBP4**	25	40
8-channel output terminal	**SL-VTBP8**	30	60
16-channel output terminal	**SL-VTBP16**	40	100
32-channel output terminal	**SL-VTBP32**	45	180

Notes: 1) **SL-VVMES2**, the value for 1 port is shown in the above table.
2) Regarding the **SL-VTPR□**, **SL-VT□J**, **SL-VT□E**, **SL-VT□16C1**(**-S**), and **SL-VM□16,** if the ambient temperature is not in the specified range, turning on of all the points may not be possible.
For a detailed description, refer to the specifications of each product shown in **Chapter 4**.
3) The **SL-VTPR□** limits the output current depending on the ambient operation temperature and the number of ON points.
For the characteristics of the product when using PhotoMOS relay, refer to the '**Panasonic Industrial Devices SUNX website: https://panasonic.net/id/pidsx/global** .'
4) The value shown in the 'Unit side' area indicates the current consumption in the main circuit.
The value shown in the 'I/O side' area indicates the current consumption in the I/O circuit.

NOTE

The values shown in the above table does not include the current supplied to the PLC module and current consumption of sensors and loads.
In addition to the above units, when additional units (products) are connected, such as the 3-line sensor and output load, to the same 24V DC power supply unit, add the current consumption values of the additional units to the power supply capacity value.

Example: Calculation of current consumption

<System configuration for control of 8 sensors and 4 output loads>

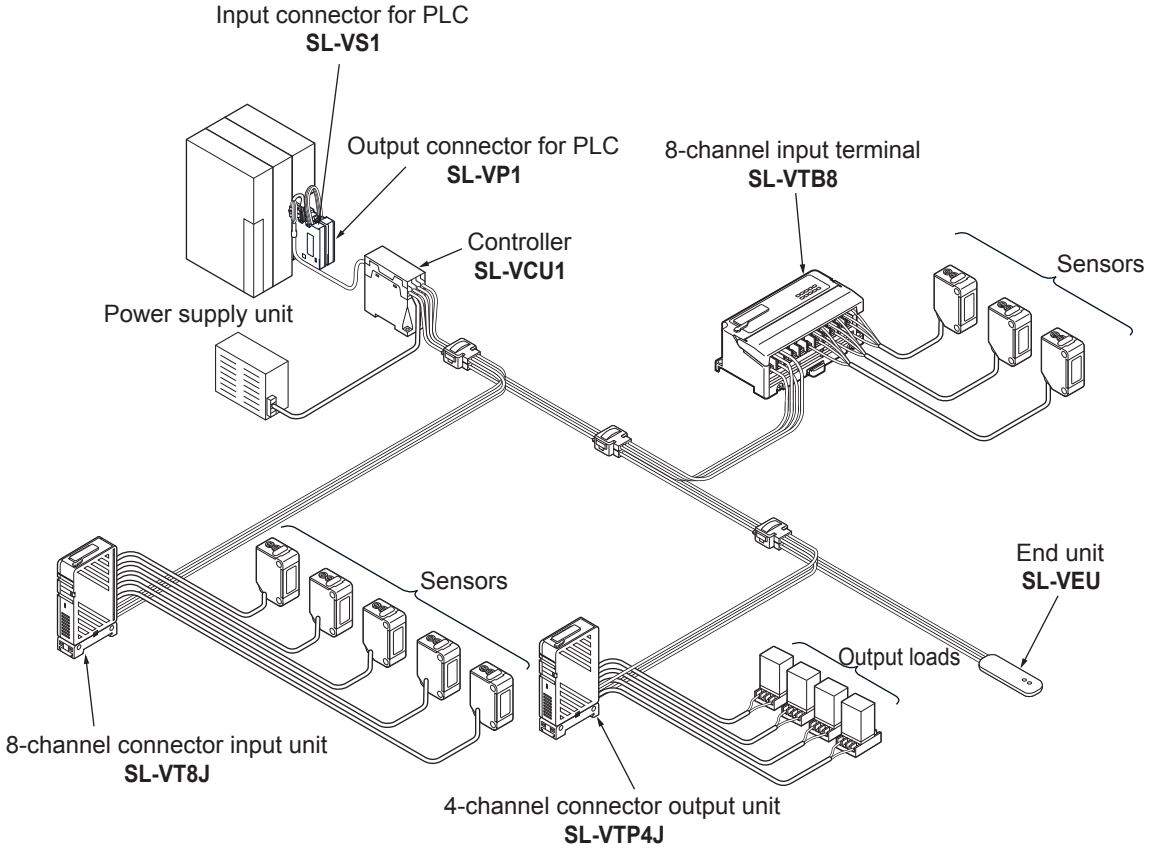

Designation	Model No.	Qty	Current consumption (mA)
Controller	**SL-VCU1**	1	135
End unit	**SL-VEU**	1	10
Input connector for PLC	**SL-VS1**	1	30
Output connector for PLC	**SL-VP1**	1	73
8-channel connector input unit	**SL-VT8J**	1	105
4-channel connector output unit	**SL-VTP4J**	1	60
8-channel input terminal	**SL-VTB8**	1	30 + 75 = 105
Sensors (Average current consumption: approx. 30mA)	——	8	30 × 8 = 240
Output loads (Average current consumption: approx. 20mA)	——	4	20 × 4 = 80
		Total	838

Calculation of Voltage Drop Value

The transmission cables of the **S-LINK V** system may cause voltage drop due to the conductor resistance of the cables themselves. For this reason, calculate the voltage drop value between +24V and 0V, and supply the rated voltage to all the **S-LINK V** I/O units. However, it is not necessary to consider the voltage drop between the D and G, and that of the control cables and connector link cables.

⚠ CAUTION

Use of a longer cable will cause more voltage drop. If the voltage drops below the rated voltage, the I/O units will not work. In this case, use the local power supply unit.

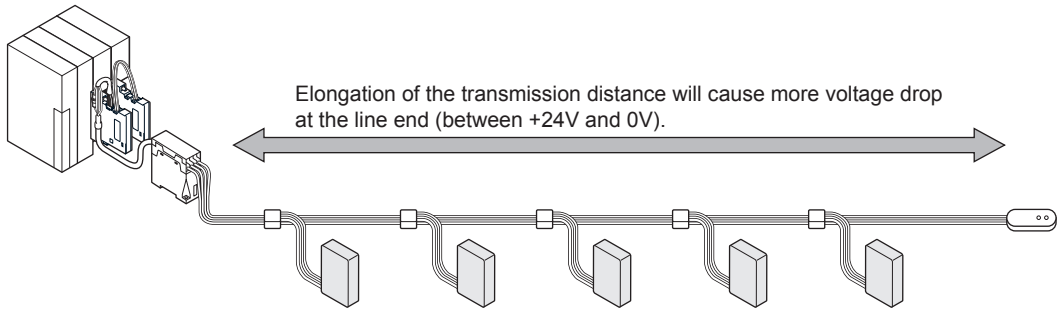

Voltage drop (V) = Cable length (m) × 2 × conductor resistance (Ω/m) × current (A)

Relation between the ambient temperature and allowable passing current when exclusive S-LINK V cable SL-RCM100□ / RCM200 or SL-CBM100 / CBM200 (conductor cross section = 0.5mm^2 for each cable) is used.

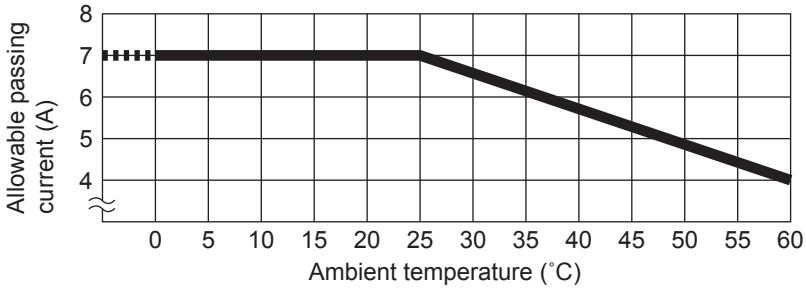

Rated voltage (V)

⚠ CAUTION

The rated voltage depends on the unit. Check the rated voltage, and then select the right power supply unit and cables.

Supply the rated voltage to each unit.

- **Since the rated voltage to be supplied to the controller is +24V (-5%), the voltage supplied to the controller should not be dropped below the following value:**
  24 - (24 × 0.05) = **22.8V**
- **Since the rated voltage to be supplied to the I/O units and end unit is +24V (-10%), the voltage supplied to these units should not be dropped below the following value:**
  24 - (24 × 0.1) = **21.6V**

Necessity of Local Power Supply Unit

The 24V DC power supply unit that drives the system uses either the centralized power supply method (use of only one power supply unit) or the decentralized power supply method (use of additional local power supply unit) to supply power to each unit.

At first, calculate the total current consumption value (sum total of current consumption values of all units '+' sum total of load current values of I/O devices).
After that, from the obtained calculation result, cable length, and conductor resistance, calculate the voltage drop value, and determine the voltage to be supplied to each unit.

If the voltage supplied to each unit is above the rated voltage (22.8V or more for the controller, 21.6V or more for the I/O unit), you can design the system using the centralized power supply method.
If the voltage supplied to a unit is out of the rated voltage range, connect a local power supply unit, and use the local power supply method.

Designing of system using local power supply method

⚠ CAUTION

To use a local power supply unit, turn on the local power supply unit first, and then turn on the main power supply unit, or turn on these power supply units at the same time.
If the main power supply unit is turned on first, the system may not operate properly.

In the following cases, connect a local power supply unit:
- The communication distance is too long, and voltage drop is too large.
  For this reason, it is not possible to supply the rated voltage to the I/O units.
- A 2-core cable is used for connection of the I/O unit (for the D-G line only).
- The main power supply unit and the local power supply unit should be the small capacity type.
- An I/O device that generates a large noise should be used.

<Reference value>

Conductor cross section (mm^2)	Conductor resistance (Ω/m)
0.3	Approx. 0.065
0.5	Approx. 0.040
0.75	Approx. 0.025
1.25	Approx. 0.015
2.0	Approx. 0.010

Notes: 1) The conductor resistance values shown in the above table are reference values.
To determine the conductor resistance values for the actual cables, contact the cable manufacturer.
2) The conductor cross section of the exclusive 4-core flat cable should be $0.5mm^2$.

To determine whether a local power supply unit is necessary, refer to the flowchart shown on the next page.

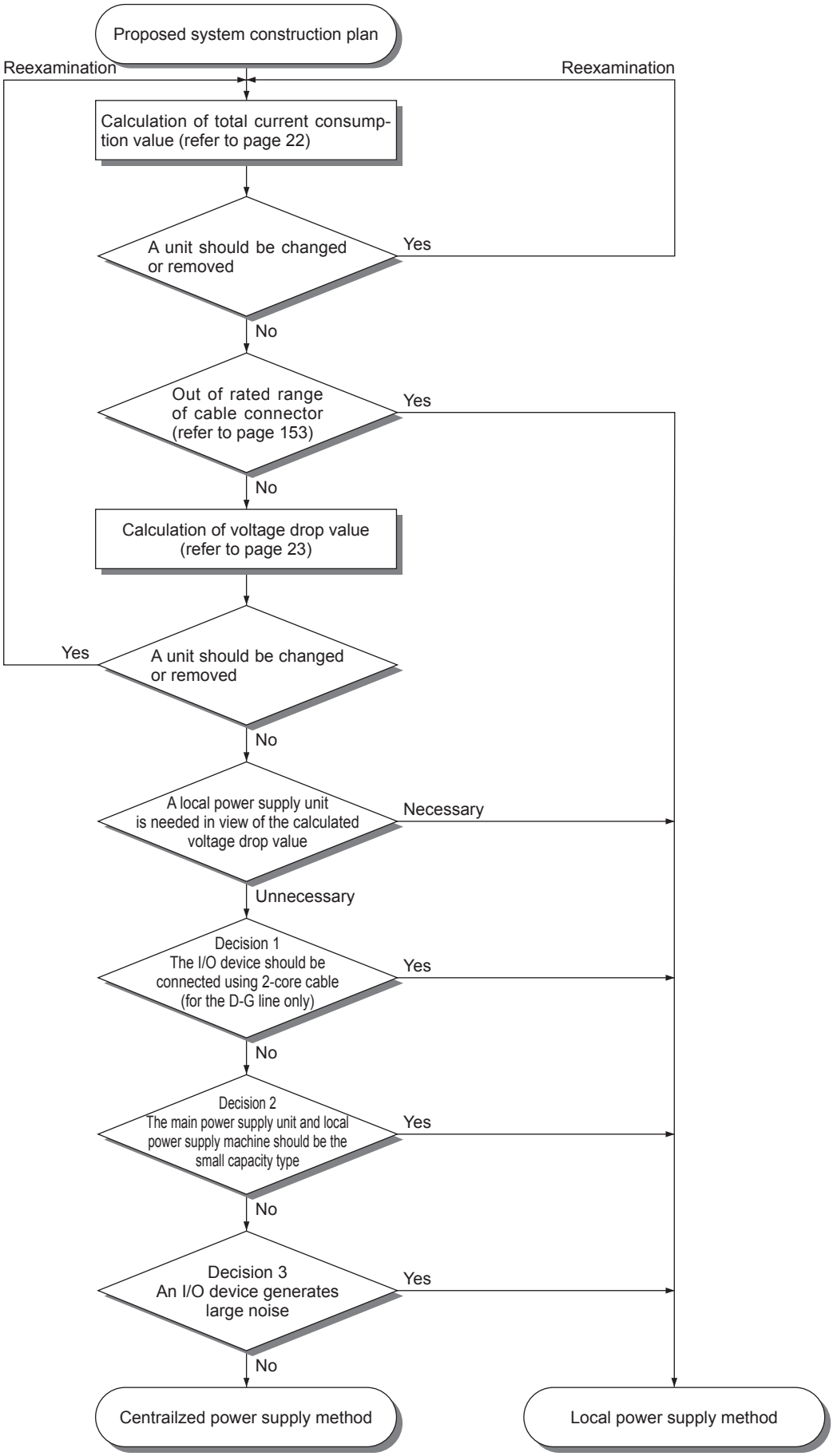
Proposed system construction plan
Reexamination
Reexamination
Calculation of total current consumption value (refer to page 22)
A unit should be changed or removed
Yes
No
Out of rated range of cable connector (refer to page 153)
Yes
No
Calculation of voltage drop value (refer to page 23)
Yes
A unit should be changed or removed
No
A local power supply unit is needed in view of the calculated voltage drop value
Necessary
Unnecessary
Decision 1
The I/O device should be connected using 2-core cable (for the D-G line only)
Yes
No
Decision 2
The main power supply unit and local power supply machine should be the small capacity type
Yes
No
Decision 3
An I/O device generates large noise
Yes
No
Centrailzed power supply method
Local power supply method

Connection of DC 2-Wire Output Device to Input Unit

⚠ CAUTION

If you have to connect a DC 2-wire output device to an input unit, recommend our product.
If a product manufactured by another company is used, the conditions should be checked by following the procedure shown in the following flowchart.
This is because the output device of another company does not fit our input unit.

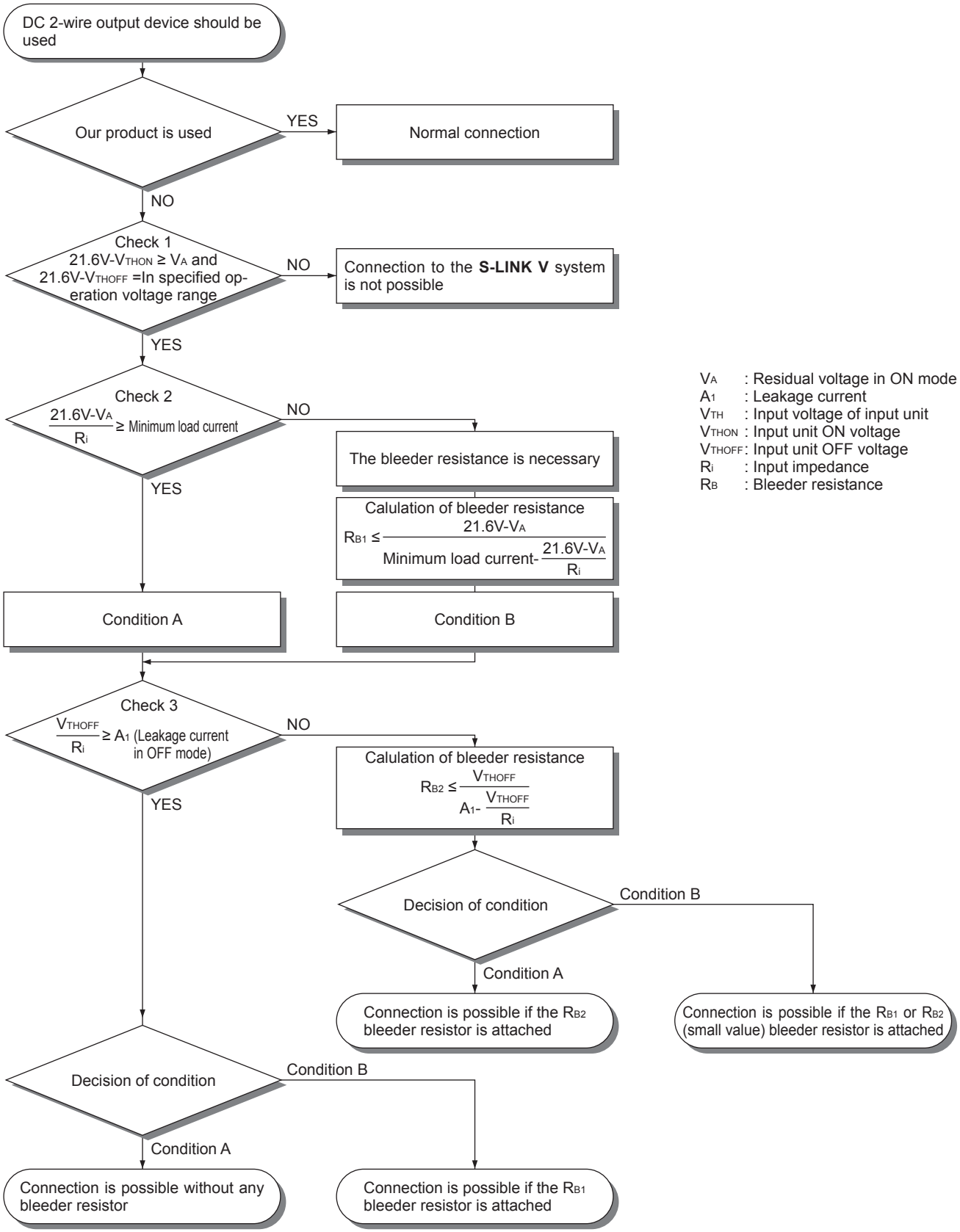

V_A : Residual voltage in ON mode
A_1 : Leakage current
V_{TH} : Input voltage of input unit
V_{THON} : Input unit ON voltage
V_{THOFF} : Input unit OFF voltage
R_i : Input impedance
R_B : Bleeder resistance

Example: Connection of DC 2-wire sensor

- **To connect DC 2-wire proximity sensor GX-12MU to 8-channel connector input unit SL-VT8J**

V_{THON} : **SL-VT8J** ON voltage = 17V or more (between +24V and data input)
V_{THOFF} : **SL-VT8J** OFF voltage = 4V or less (between +24V and data input)
R_1 : Input impedance of **SL-VT8J** = 3.3kΩ
V_A (residual voltage in ON mode) of **GX-12MU** = 3V or less
Specified operation voltage range of **GX-12MU** = 12 to 24V DC $^{+10}_{-5}$% = 10.2 to 26.4V DC
Minimum load current of **GX-12MU** = 3mA
A_1 (leakage current) of **GX-12MU** = 0.8mA

Check 1

21.6V - 17V = 4.6V ≥ 3V
21.6V - 4V = 17.6V (in range of 10.2 to 26.4V)
Since the requirements of both formulas are satisfied, carry out checks 2 and 3.

Check 2

$$\frac{21.6\text{V} - V_A \text{ of DC 2-wire input device}}{R_1} \approx \frac{21.6\text{V}-3\text{V}}{3.3\text{k}\Omega} = \frac{18.6\text{V}}{3.3\text{k}\Omega} \approx 5.64\text{mA} \geq 3\text{mA}$$

Check 3

$$\frac{V_{THOFF}}{R_1} = \frac{4\text{V}}{3.3\text{k}\Omega} \approx 1.21\text{mA} \geq 0.8\text{mA}$$

Since the requirements of Checks 2 and 3 are satisfied, the bleeder resistor is not necessary.

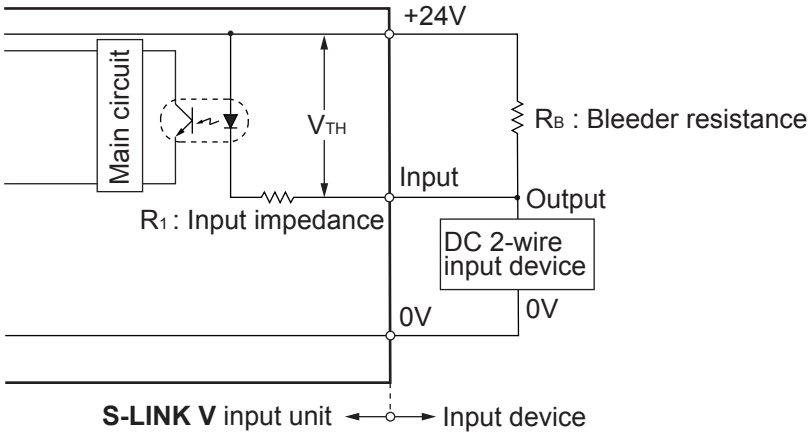

Transmission Delay Time

⚠ CAUTION

Due to difference in communication protocols, the transmission delay time of the **S-LINK V** system differs from that of the conventional **S-LINK** system.

For transmission, there are fastest transmission time and the slowest transmission time.
Since this product uses the serial transmission method, transmission will be carried out as shown in the following figure.
For a detailed description of the following controllers, refer to their respective user's manuals.

SL-VGU1-C, **SL-VGU1-D** : **SL-VGU1-C** / **SL-VGU1-D** User's Manual
SL-VGU1-EC : **SL-VGU1-EC** User's Manual
SL-VGU1-485 : **SL-VGU1-485** User's Manual

Response delay time

<In case of SL-VCU1>

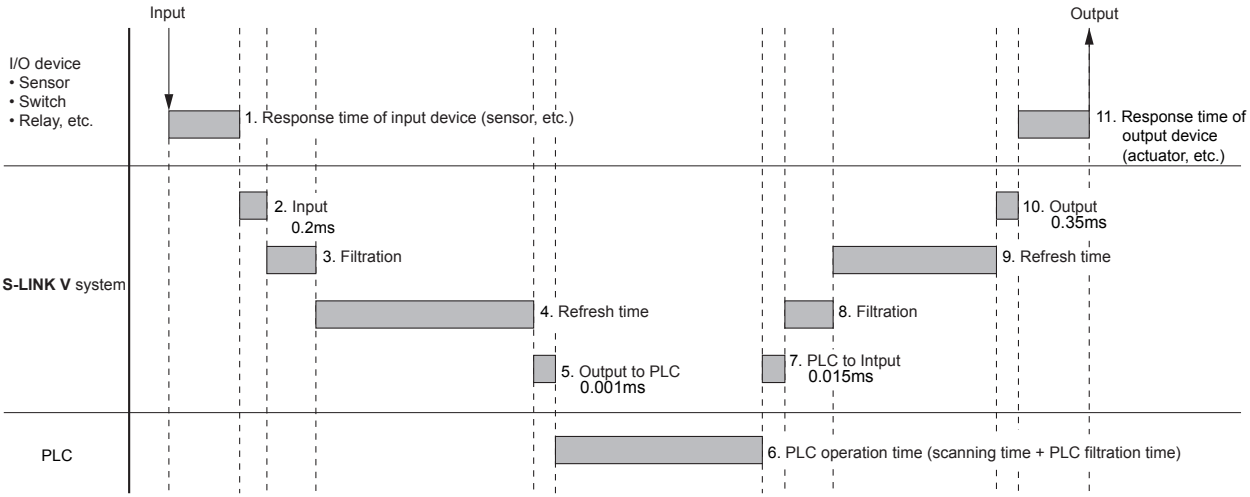

● **Response delay of S-LINK V system**

• Input response time (2 + 3 + 4 + 5)

		2		3		4		5
MIN.	=	0.2	+	From Table 1	+	From Table 2	+	0.001 (ms)
MAX.	=	0.2	+	From Table 1	+	From Table 2	+	0.001 (ms)

• Output response time (7 + 8 + 9 + 10)

		7		8		9		10
MIN.	=	0.015	+	From Table 1	+	From Table 2	+	0.35 (ms)
MAX.	=	0.015	+	From Table 1	+	From Table 2	+	0.35 (ms)

<In case of SL-VFP2, SL-VMEL-Q, SL-VPCI, SL-VVMES2>

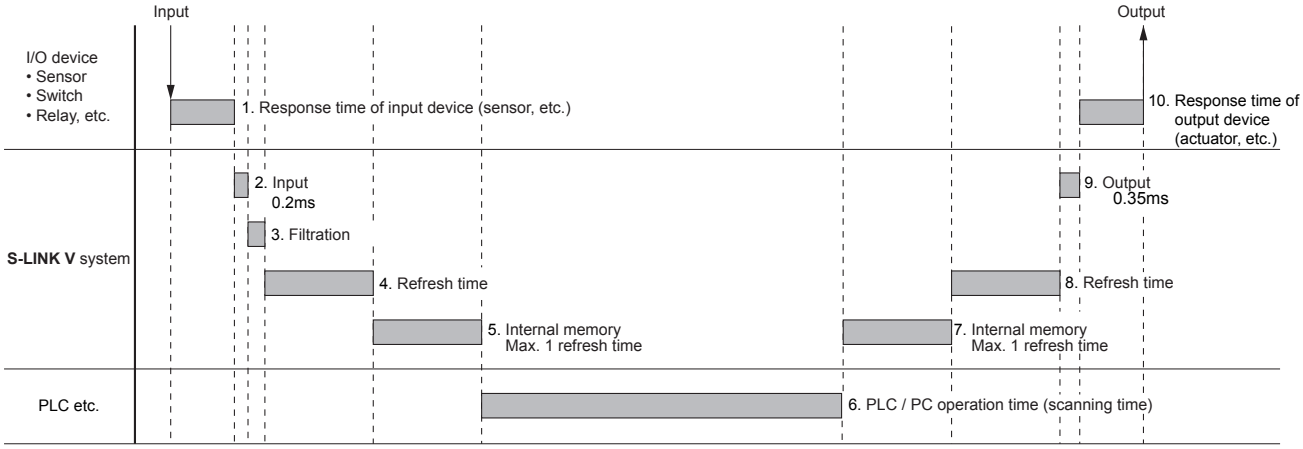

● **Response delay of S-LINK V system**

• Input response time (2 + 3 + 4 + 5)

		2		3		4		5
MIN.	=	0.2	+	From Table 1	+	From Table 2	+	From Table 2 (ms)
MAX.	=	0.2	+	From Table 1	+	From Table 2	+	From Table 2 (ms)

• Output response time (7 + 8 + 9)

		7		8		9
MIN.	=	From Table 2	+	From Table 2	+	0.35 (ms)
MAX.	=	From Table 2	+	From Table 2	+	0.35 (ms)

<Table 1 Filtration time>

Filtration time (ms)					
A mode		B mode		C mode	
MIN.	MAX.	MIN.	MAX.	MIN.	MAX.
0.05	0.06	0.19	0.26	0.77	1.02

<Table 2 Refresh time, Internal memory max.1 refresh time>

Number of I/O control points	Refresh time, Internal memory max.1 refresh time (ms)					
	A mode		B mode		C mode	
	MIN.	MAX.	MIN.	MAX.	MIN.	MAX.
32	0.29	1.50	1.18	6.01	4.70	24.03
64		2.09		8.36		33.44
96		2.68		10.71		42.85
128		3.27		13.06		52.26
160		3.85		15.42		61.66
192		4.44		17.77		71.07
224		5.03		20.12		80.48
256		5.62		22.47		89.89
288		6.21		24.82		99.30
320		6.79		27.18		108.70
352		7.38		29.53		118.11
384		7.97		31.88		127.52
416		8.56		34.23		136.93
448		9.15		36.58		146.34
480		9.73		38.94		155.74
512		10.32		41.29		165.15

Operation at power-on

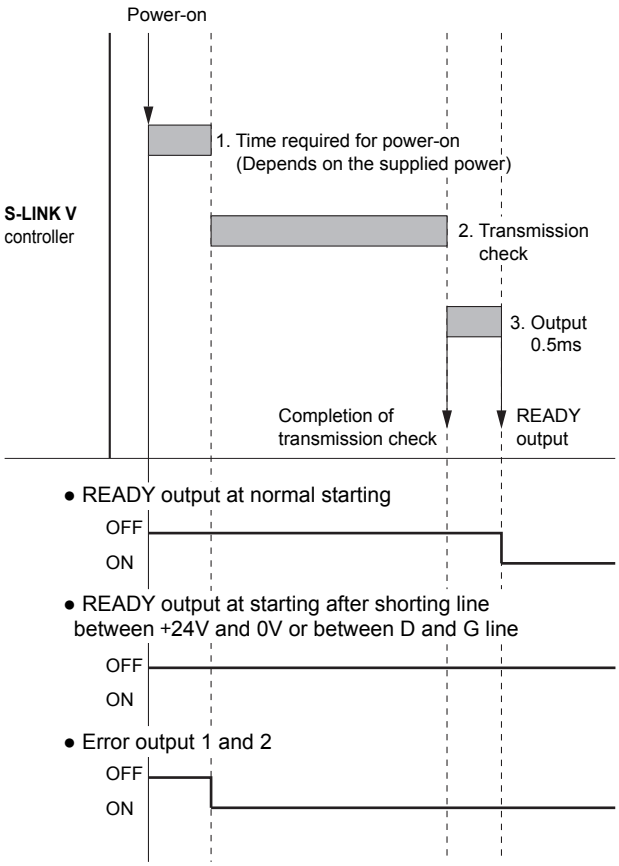

<Table 3 Time required for transmission check at starting controller>

Number of I/O control points	Time required for transmission check at starting cotroller (ms)		
	A mode	B mode	C mode
32	69.5	134.3	422.1
64	82.6	186.8	632.2
96	100.4	258.1	917.5
128	123.0	348.3	1278.1
160	150.2	457.2	1713.9
192	182.2	585.0	2225.0
224	218.8	731.6	2811.4
256	260.2	897.0	3473.0
288	306.2	1081.2	4209.9
320	357.0	1284.3	5022.1
352	412.4	1506.1	5909.5
384	472.6	1746.8	6872.2
416	537.5	2006.3	7910.1
448	607.1	2284.6	9023.4
480	681.3	2581.7	10211.8
512	760.3	2897.6	11475.6

- **READY output delay time (1 + 2 + 3)**
  1 (Depending on supplied power) + 2 (From Table 3) + 3 (0.5 ms)

Error signal outputting delay time

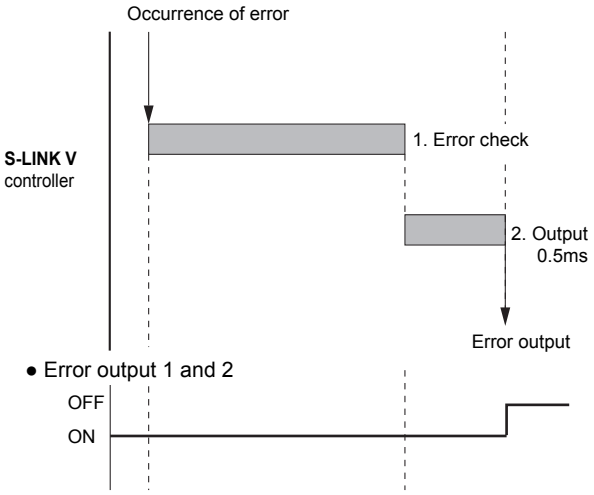

- **Error output delay time (1 + 2)**
  1 (From Table 4 or 5) + 2 (0.5ms)

<Table 4 Time required for error check (errors 3, 4, and 5)>

Number of I/O control points	Time required for error check (errors 3, 4, and 5) (ms)		
	A mode	B mode	C mode
32	43.5	174.0	695.8
64	93.4	373.6	1494.3
96	162.1	648.4	2593.8
128	249.6	998.6	3994.4
160	356.0	1424.0	5696.0
192	481.2	1924.7	7698.7
224	625.2	2500.6	10002.4
256	788.0	3151.8	12607.2
288	969.6	3878.3	15513.1
320	1170.0	4680.0	18720.0
352	1389.2	5557.0	22228.0
384	1627.3	6509.2	26037.0
416	1884.2	7536.8	30147.1
448	2159.9	8639.6	34558.2
480	2454.4	9817.6	39270.4
512	2767.7	11070.9	44283.6

<Table 5 Time required for error check (errors 1 and 2)>

Time required for error check (errors 1 and 2) (ms)		
A mode	B mode	C mode
1.33	5.32	21.28

System setting time

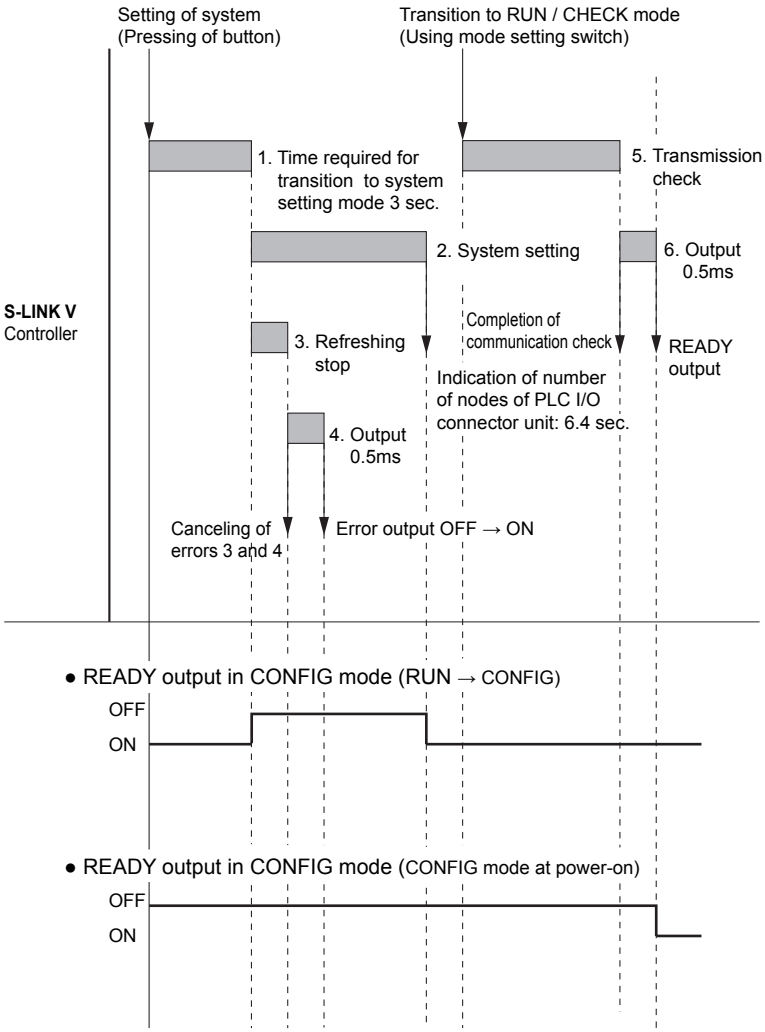

<Table 6 Time required for system setting>

Number of I/O control points	Time required for system setting (ms)		
	A mode	B mode	C mode
32	142.7	427.0	1593.0
64	235.3	797.4	3074.8
96	342.0	1224.3	4782.3
128	462.8	1707.7	6715.7
160	597.8	2247.5	8874.9
192	746.8	2843.7	11259.8
224	910.0	3496.4	13870.6
256	1087.3	4205.5	16707.1
288	1278.7	4971.1	19769.5
320	1484.2	5793.1	23057.6
352	1703.8	6671.6	26571.5
384	1937.6	7606.5	30311.2
416	2185.4	8597.9	34276.7
448	2447.4	9645.7	38468.0
480	2723.4	10750.0	42885.1
512	3013.6	11910.7	47528.0

<Table 7 Time required for refreshing stop>

Number of I/O control points	Time required for refreshing stop (ms)		
	A mode	B mode	C mode
32	15.7	62.8	251.3
64	37.7	150.9	603.5
96	69.1	276.5	1106.2
128	110.0	439.9	1759.4
160	160.2	640.8	2563.2
192	219.8	879.4	3517.5
224	288.9	1155.6	4622.3
256	367.4	1469.4	5877.7
288	455.2	1820.9	7283.6
320	552.5	2210.0	8840.0
352	659.2	2636.7	10546.9
384	775.3	3101.1	12404.4
416	900.8	3603.1	14412.4
448	1035.7	4142.7	16570.9
480	1180.0	4720.0	18880.0
512	1333.7	5334.9	21339.6

<Table 8 Time required for transmission check>

Number of I/O control points	Time required for transmission check (ms)		
	A mode	B mode	C mode
32	69.5	134.3	422.1
64	82.6	186.8	632.2
96	100.4	258.1	917.5
128	123.0	348.3	1278.1
160	150.2	457.2	1713.9
192	182.2	585.0	2225.0
224	218.8	731.6	2811.4
256	260.2	897.0	3473.0
288	306.2	1081.2	4209.9
320	357.0	1284.3	5022.1
352	412.4	1506.1	5909.5
384	472.6	1746.8	6872.2
416	537.5	2006.3	7910.1
448	607.1	2284.6	9023.4
480	681.3	2581.7	10211.8
512	760.3	2897.6	11475.6

Selection of Output Holding Function for Output Unit

Output units are equipped with the output holding function.
If a transmission error is detected, the output holding function will be activated to hold the output condition detected just before occurrence of the error.

Output holding function setting method

⚠ CAUTION

Before setting the output holding function, fully understand the function, and check the operation condition of the output-to device. If this function is not set correctly, a serious problem may occur.

The output hold setting switch is at the end of the address setting switch panel.
Set the 'HOLD' switch to ON / OFF to set the output holding function.

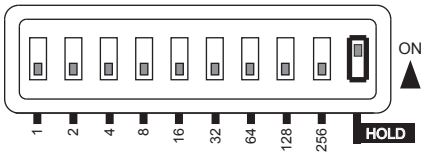

Output hold setting switch	Operation in normal transmission mode	Operation in transmission error mode
OFF	Output operation	Turning off of output
ON		Holding of output condition detected just before occurrence of error

<If output module is SL-VMP8 or SL-VMP16>

If the line between HOLD (pin No. 29) and ADD. (COM.) (pin No. 28) is opened, the output holding function will be canceled ('HOLD OFF' mode).
If this line is shorted, the output holding function will be set ('HOLD ON' mode).

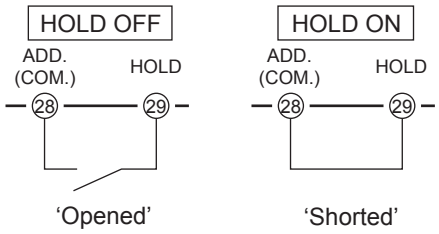

NOTE

- Before delivery, the output hold setting switch is set to OFF (the 'HOLD OFF') mode is set.
- If it takes a long time to turn off the power of the controller, the output holding function may not operate properly.

Address Setting

> **NOTE**
> The **S-LINK V** system uses one controller to send up to 512 points (512 points × 2 for **SL-VVMES2**) (256 nodes) of signal in the serial transmission mode.
> To clarify the sent-from and sent-to units, assign a number to each I/O device.
> These numbers are referred to as 'addresses.'
> To properly operate the **S-LINK V** system, correctly set the addresses.

Setting of PLC I/O connector numbers

> **⚠ CAUTION**
> Be careful not to set the same address for the PLC I/O connectors.
> Considering the set connector numbers, set the optimum I/O control points for the controller.
> For the address setting examples, refer to page 176.

Using the connector number setting switches, you can set a connector number consisting of 32 points for each PLC I/O connector. (The same connector number setting method can be used for any types of PLC I/O connectors.)
For the connector number setting examples, refer to page 73.

Setting of I/O unit addresses

> **⚠ CAUTION**
> - Be careful not to set the same address for the **S-LINK V** I/O units.
> - Set the addresses of **S-LINK V** I/O units while observing the I/O area set by the PLC I/O connectors. Note that any address exceeding the I/O control points cannot be set.

Using the address setting switches, assign addresses to I/O units.
For each I/O unit, the assigned address will be the first number of the address, and the rest of the address will be set depending on the specified number of I/O points.
For a detailed description, refer to page 74.

- **When using the picking switch SL-VPK0□**
  To assign the address, use the address setting remote controller **SL-VAR1** and send it to the **SL-VPK0□**.
  For a detailed description, refer to the User's Manual that came with the address setting remote controller **SL-VAR1**.

Example: Address setting

- **If PLC I/O connector is connected to the A1SX42 (input module) and the A1SY42 (output module) manufactured by Mitsubishi Electric Corporation:**

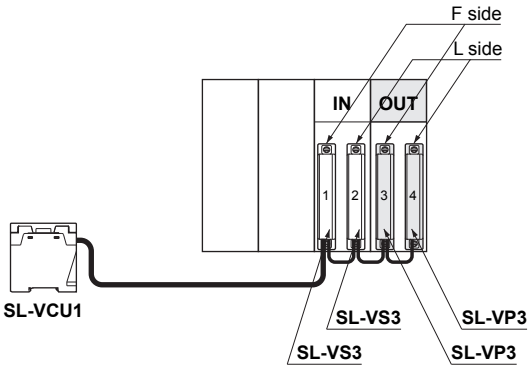

PLC I/O connector		I/O	PLC I/O connector model	Address
No.	Connector No.			
1	0	Input	**SL-VS3**	0 to 31
2	1		**SL-VS3**	32 to 63
3	2	Output	**SL-VP3**	64 to 95
4	3		**SL-VP3**	96 to 127

	'F side of A1SX42' and **SL-VS3** 1				'L side of A1SX42' and **SL-VS3** 2			
	Signal name	Address	Signal name	Address	Signal name	Address	Signal name	Address
Input A1SX42	X00	0	X10	16	X20	32	X30	48
	X01	1	X11	17	X21	33	X31	49
	X02	2	X12	18	X22	34	X32	50
	X03	3	X13	19	X23	35	X33	51
	X04	4	X14	20	X24	36	X34	52
	X05	5	X15	21	X25	37	X35	53
	X06	6	X16	22	X26	38	X36	54
	X07	7	X17	23	X27	39	X37	55
	X08	8	X18	24	X28	40	X38	56
	X09	9	X19	25	X29	41	X39	57
	X0A	10	X1A	26	X2A	42	X3A	58
	X0B	11	X1B	27	X2B	43	X3B	59
	X0C	12	X1C	28	X2C	44	X3C	60
	X0D	13	X1D	29	X2D	45	X3D	61
	X0E	14	X1E	30	X2E	46	X3E	62
	X0F	15	X1F	31	X2F	47	X3F	63

	'F side of A1SY42' and **SL-VP3** 3				'L side of A1SY42' and **SL-VP3** 4			
	Signal name	Address	Signal name	Address	Signal name	Address	Signal name	Address
Output A1SY42	Y40	64	Y50	80	Y60	96	Y70	112
	Y41	65	Y51	81	Y61	97	Y71	113
	Y42	66	Y52	82	Y62	98	Y72	114
	Y43	67	Y53	83	Y63	99	Y73	115
	Y44	68	Y54	84	Y64	100	Y74	116
	Y45	69	Y55	85	Y65	101	Y75	117
	Y46	70	Y56	86	Y66	102	Y76	118
	Y47	71	Y57	87	Y67	103	Y77	119
	Y48	72	Y58	88	Y68	104	Y78	120
	Y49	73	Y59	89	Y69	105	Y79	121
	Y4A	74	Y5A	90	Y6A	106	Y7A	122
	Y4B	75	Y5B	91	Y6B	107	Y7B	123
	Y4C	76	Y5C	92	Y6C	108	Y7C	124
	Y4D	77	Y5D	93	Y6D	109	Y7D	125
	Y4E	78	Y5E	94	Y6E	110	Y7E	126
	Y4F	79	Y5F	95	Y6F	111	Y7F	127

To set addresses as shown in the above table, set the I/O control points of the controller to 128 points.
If the control points is set to under 128 points, transmission with a unit set to 128 points of I/O points or more will not be possible.
For a detailed description, refer to page 176.

Chapter 2
Wiring

Flowchart

To wire each unit, follow the procedure shown in the following flowchart:

⚠ DANGER

Before disconnecting or reconnecting a cable or connector, be sure to turn off the power.

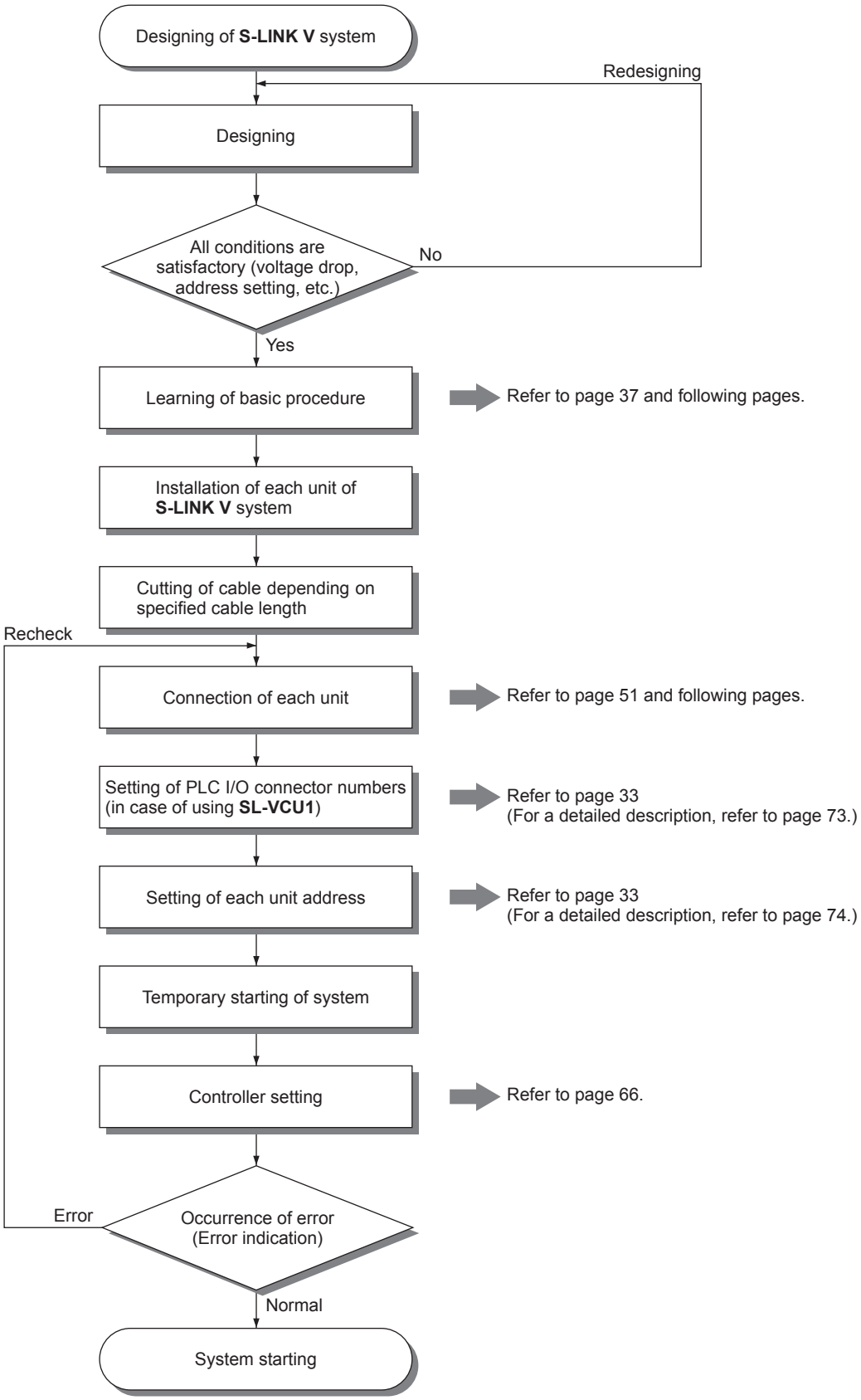

Connector hook-up work

This section describes the knowledge and setup method to be learned before starting connector hook-up work.

⚠ CAUTION

- If a connector is not hooked-up correctly, the **S-LINK V** system will not work.
- If a connector is once hooked-up, do not use the connector again.
  This is because the performance of a used connector may be deteriorated.
- Before starting hook-up work, be sure to turn off the power.
- When you disconnect or reconnect a connector, be sure to grab the connector main body.
  If you pull the cable to disconnect or reconnect a connector, the cable may be disconnected.
- Do not hook-up any connector in a cold weather, such as outdoors in winter.

Cutting of exclusive 4-core flat cable

Cut the exclusive 4-core flat cable so that the end face of the cable can be orthogonal.

⚠ CAUTION

- Cut the exclusive 4-core flat cable so that the end face of the cable can be orthogonal.
  If the end face is not orthogonal, the connector may not be hooked-up properly.
- Do not peel the sheath of the exclusive 4-core flat cable.
- After cutting the exclusive 4-core flat cable, check that the cores are not in contact with each other.

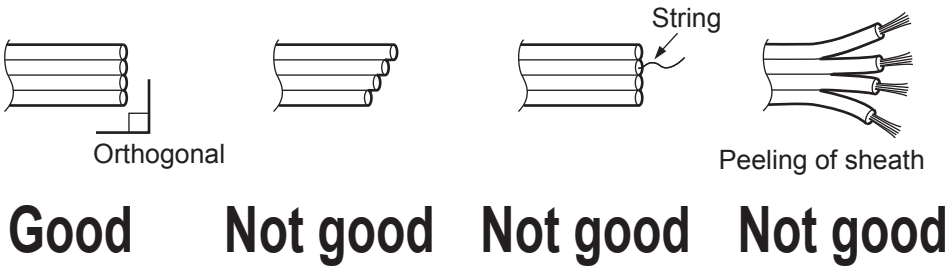

How to use exclusive hook-up pliers (SL-JPS, SL-JPC, SL-JPE)

⚠ CAUTION

If there is a clearance between the guide of the exclusive hook-up pliers and the connector, the connector may not be hooked-up properly.

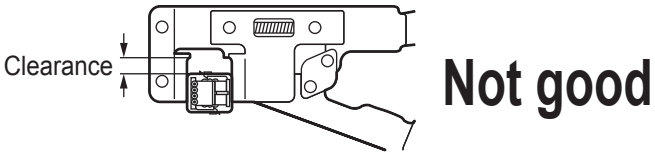

1. Adjust the protrusion of the connector to the guides of the hook-up pliers.

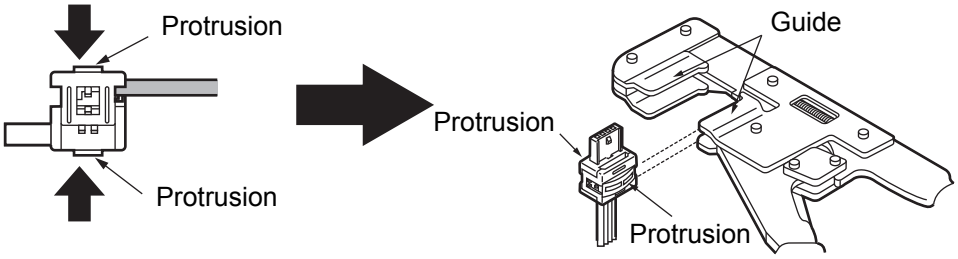

2. Slide the connector to the guides till it stops, and check if there is no clearance between them.

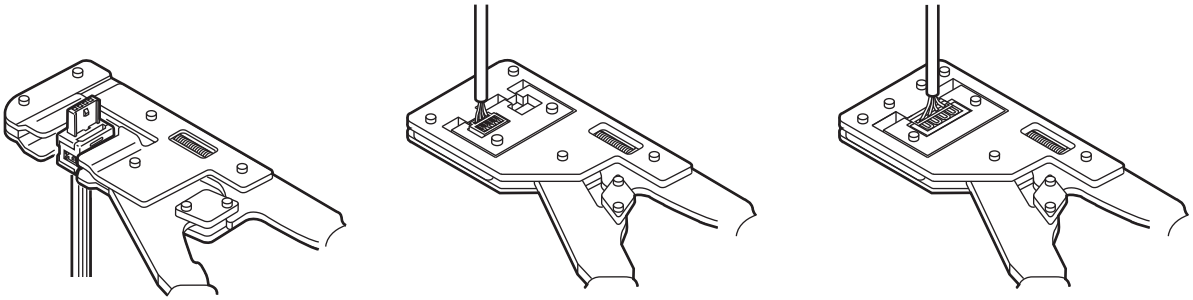

<SL-JPS> **<SL-JPC>** **<SL-JPE>**

3. Adjust the exclusive hook-up pliers so that the pliers can be orthogonal to the cable.
After that, press the connector until it clicks.

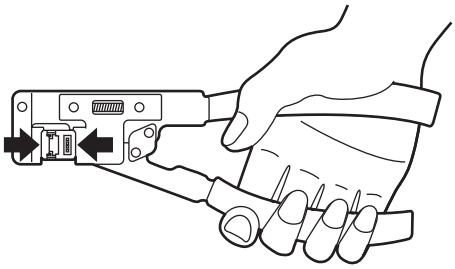

Hook-up of Connector

Hook-up method of SL-JK connector for cable end and SL-JK1 connector for 'T'- branch

⚠ CAUTION

- Before starting the connector hook-up work, fully understand the hook-up work and the setup work (See pages 37, 38.)
- Use the exclusive 4-core flat cable.

1. Prepare a set of **SL-JK** or **SL-JK1** connector housing and the cover.

SL-JK hook-up connector for cable end: Light blue
SL-JK1 hook-up connector for 'T' - branch: Blue

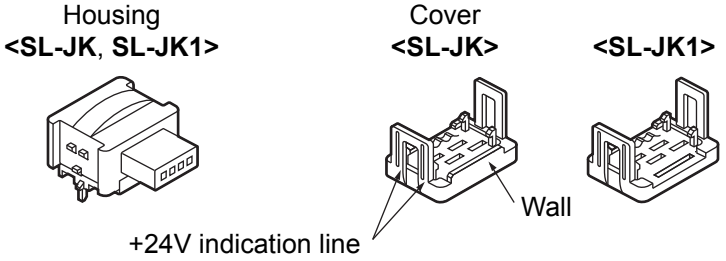

NOTE: A hook-up connector consists of a housing and a cover.
Do not attach a housing to a cover having different color.

2. Hook-up the main / branch line flat cable to the cover. Fix the cable using 4 claws.

⚠ CAUTION

Fix the brown (+24V) line of the exclusive 4-core flat cable to the recognition mark side of the cover (▲ mark side on the top or the +24V indication line on the side.)

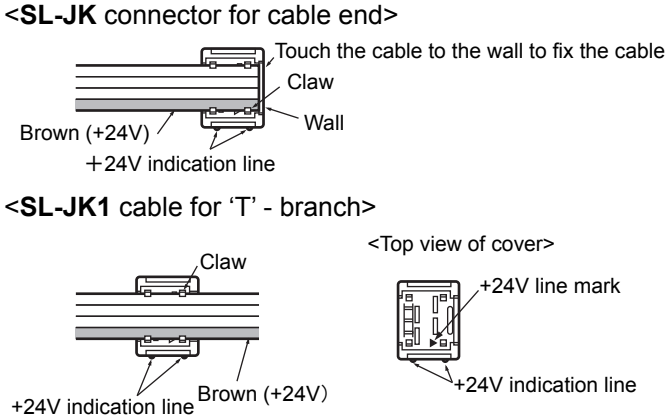

NOTE: There are recognition marks on the top (▲ mark) and the side (+24V indication line) of the cover so that the miswiring can be prevented.

3. Place the housing on the cover, and then lightly press the cover to temporarily fix it.

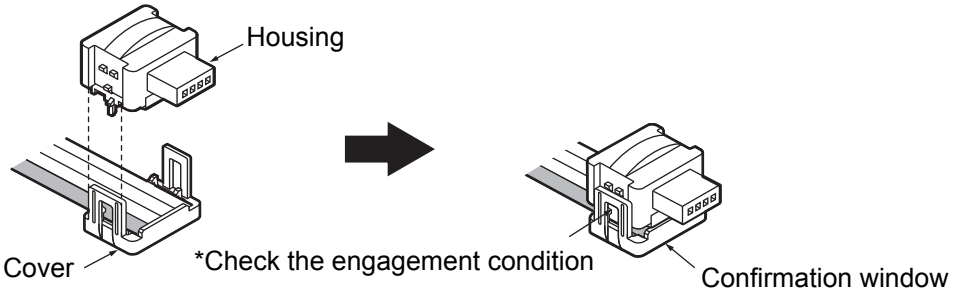

NOTE

- If the housing is placed in a wrong direction, it will not be engaged with the cover.
- If the connector is attached to the cable end, check the cable condition through the confirmation window. The cable should be in contact with the back of the connector.

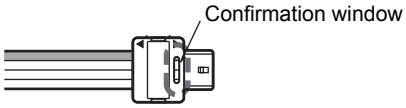

4. Hook-up the connector using the exclusive hook-up pliers (**SL-JPS**).
(For the caution regarding the exclusive hook-up pliers and the hook-up procedure, refer to pages 37, 38.)

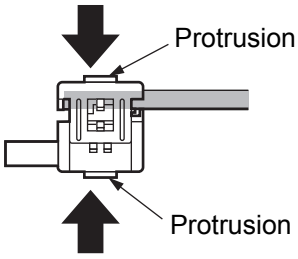

5. Check the hook-up condition of the connector.

<Check items>

- Check that the claws of the housing are properly pressed to the cover.
- If the connector is attached to the cable end, check the condition of the main / branch line flat cable through the confirmation window. The cable should be in contact with the back of the connector.

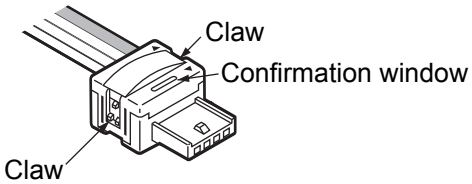

Hook-up method of SL-J1A connector for 'T' - branch and SL-J3A connector for cable extension

⚠ CAUTION

- Before starting the connector hook-up work, fully understand the hook-up work and the setup work (See pages 37, 38.)
- Use the exclusive 4-core flat cable.

1. Prepare a set of **SL-J1A** or **SL-J3A** connector covers Ⓐ and Ⓑ, and housing.

SL-J1A hook-up connector for 'T' - branch: Gray
SL-J3A hook-up connector for cable extension: Black

<SL-J1A>

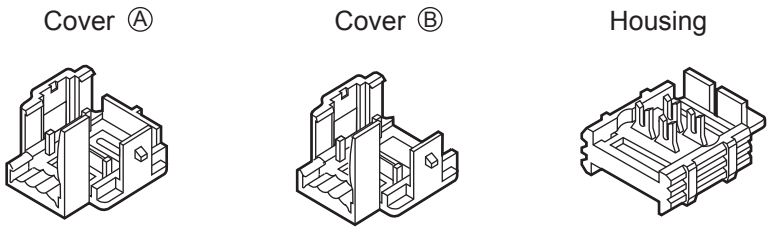

<SL-J3A>

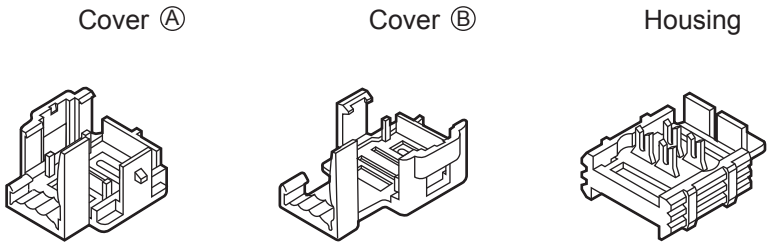

2. Touch the end face of the flat cable to cover Ⓐ, and then fix the cable using the cable stopper.

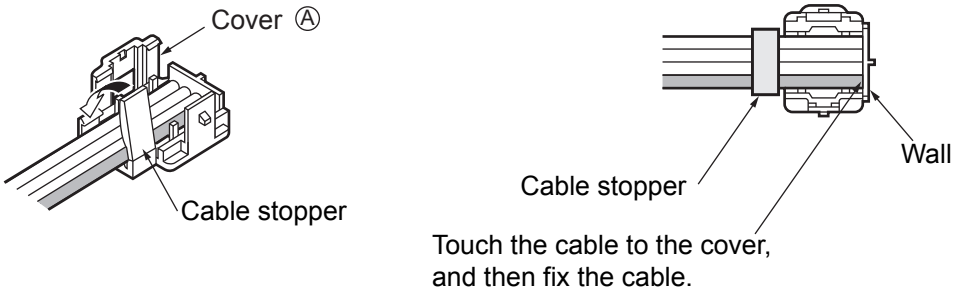

Chapter 2

3. Place the housing on cover Ⓐ, and then lightly press the cover to temporarily fix it.

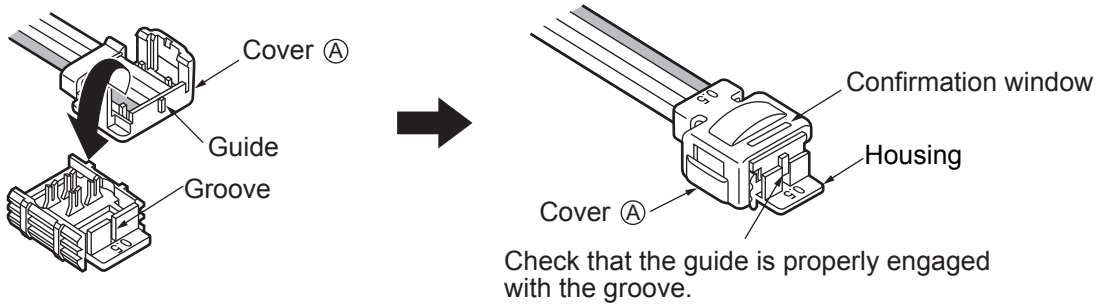

NOTE

- If the housing is placed in a wrong direction, it will not be engaged with the cover.
- Check the cable condition through the confirmation window.
  The cable should be in contact with the back of the connector.

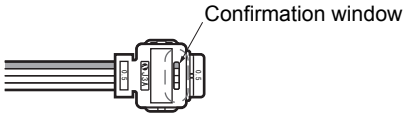

4. Place another flat cable on cover Ⓑ (for the **SL-J3A**, touch the cable to the wall), and then fix cable using the cable stopper.

<SL-J1A>

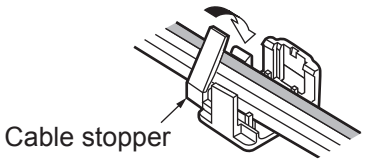

<SL-J3A>

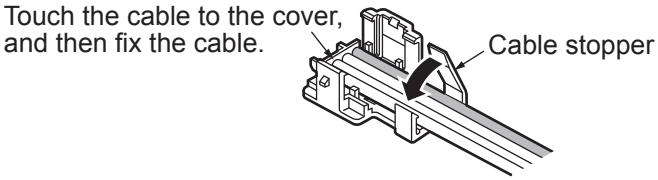

5. Place the temporarily fixed housing (see step 3) on cover Ⓑ, and then lightly press the housing to temporarily fix it.

⚠ CAUTION

Before temporarily fixing the housing, be sure to check that the same color lines of both cables are aligned with each other.

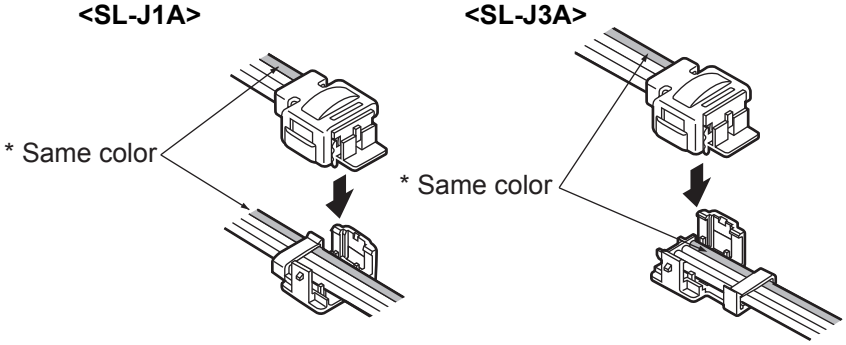

NOTE

Check the cable condition through the confirmation window.
The cable should be in contact with the back of the connector.

6. Hook-up the connector using the exclusive hook-up pliers (**SL-JPS**).
(For the caution regarding the exclusive hook-up pliers and the hook-up procedure, refer to pages 37, 38.)

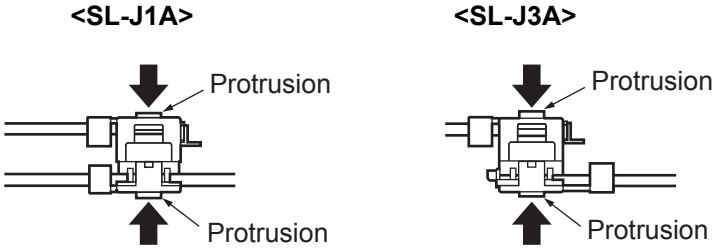

7. Check the hooked-up condition.

<Check items>

- Check that the claws are properly pressed.
- Check the condition of the flat cable through the confirmation window.
  The cable should be in contact with the back of the connector.

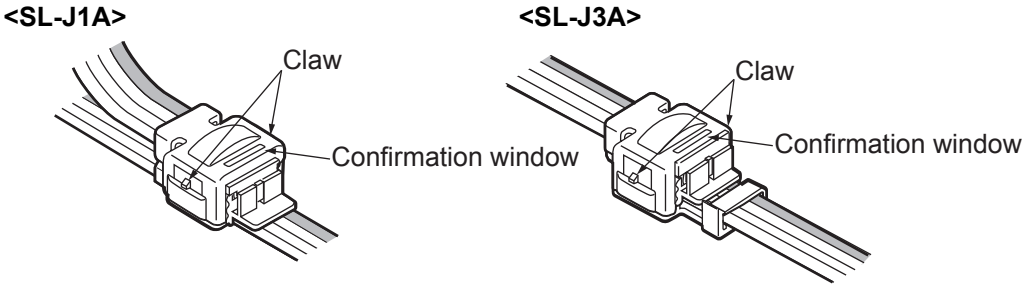

Hook-up method of SL-CP1, SL-CP2, and SL-CP3 snap male connectors and SL-CJ1 and SL-CJ2 snap female connectors

⚠ CAUTION

- Before starting the snap male / female connector hook-up work, fully understand the hook-up work and the setup work (See pages 37, 38 and 44, 45).
- Do not use the single-core cable, but use the stranded cable.
- Use the cable having a vinyl chloride or soft polyethylene insulator.
  Do not use the cable if the insulator is irradiated or cross-linked (hard type).
- Do not use the cable if the diameter is not specified in the following table.

1. For the cable, select a connector applicable for the conductor cross section and the lead wire diameter of the cable.

<Snap male connector>

Applicable connector	Color	Conductor cross section	Lead wire diameter	Allowable overcurrent	Allowable voltage
SL-CP1 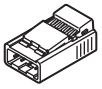	White	0.08 to 0.2mm^2 (AWG28 to AWG24)	ø0.7 to ø1.2mm	1A	30V DC
SL-CP2 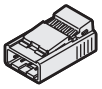	Black	0.3mm^2 (AWG22)	ø1.1 to ø1.6mm	2A	
SL-CP3 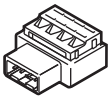	Bluish green	0.5mm^2 (AWG20)	ø1.7 to ø2.5mm	3A	

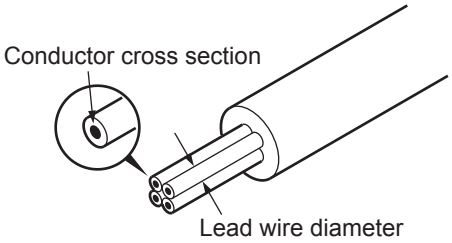

<Snap female connector>

Applicable connector	Color	Conductor cross section	Lead wire diameter	Allowable overcurrent	Allowable voltage
SL-CJ1	White	0.08 to 0.2mm^2 (AWG28 to AWG24)	ø0.7 to ø1.2mm	1A	30V DC
SL-CJ2	Black	0.3mm^2 (AWG22)	ø1.1 to ø1.6mm	2A	

2. Peel the sheath of the cable.

⚠ CAUTION

If it is not necessary to peel the sheaths of the lead wires.

3. Insert the lead wires (4 wires) into the connector holes until the wire ends come in contact with the connector wall.

⚠ CAUTION

For the lead wire insertion positions, refer to the following figure.
Miswiring may cause malfunction or damage of the system.

Connector terminal arrangement (for connection to connector I/O unit):

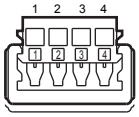

Connection to input unit:	Connection to output unit:
1 : +24V	1 : +24V
2 : 0V	2 : 0V
3 : Input	3 : Not connected
4 : Not connected	4 : Output

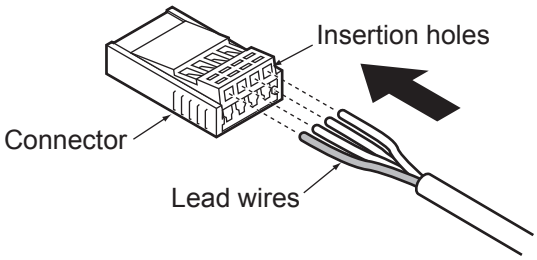

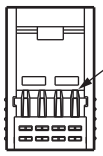

4. Hook-up the cable using the exclusive hook-up pliers (**SL-JPC** or **SL-JPE**).
(For the caution regarding the exclusive hook-up pliers and the hook-up procedure, refer to pages 37, 38.)

5. Check the hooked-up condition.

<Check items>

- Check that the claws are properly pressed.
- Check that each partition is not broken.
- Check the condition of the cable through the confirmation window.
  The cable should be in contact with the connector wall.

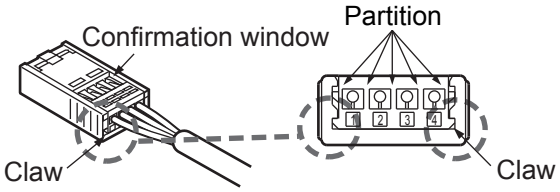

Connection to Terminal Block

⚠ WARNING

Before starting the wiring work, be sure to turn off the power. If the power is not turned off, the system may be shorted or damaged, and you may get an electric shock.

⚠ CAUTION

Correctly connect wires to the terminal block. Miswiring may cause malfunction or damage of the system.

1. Hook-up the crimp-style terminal to the cable.

2. The crimp-style terminals having insulating sheath for copper wires are recommended.

3. For the **SL-VTB□4**, use the general crimp-style terminals for M3. The dimensions of the crimp-style terminals are not restricted.

<Applicable crimp-style terminals>

(Unit: mm)

Y-shaped terminal	Round terminal
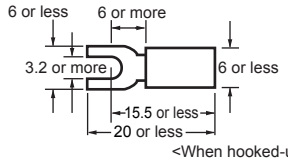	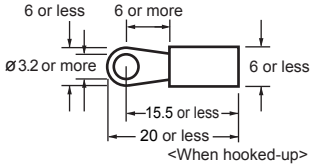

Recommended crimp-style terminals (manufactured by J.S.T Mfg Co., Ltd.):
Round crimp-style terminal with vinyl insulator (V2-S3.3)
Round crimp-style terminal with nylon insulator (N2-S3.3)
Y-shaped crimp-style terminal with vinyl insulator (V1.25-B3A, V2-N3A)

4. Check the connect-to terminals and the cable, and then connect the cable using a screwdriver.

NOTE

Tightening torque: 0.29 to 0.49N·m for controller
0.5N·m or less for I/O terminal
The terminal block is separated into two. Connect wires to the lower terminal block first.

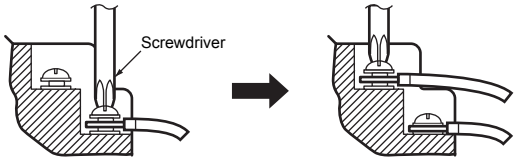

Extension of Main / Branch Line Cable

⚠ CAUTION

- If you do not use the exclusive 4-core flat cable, be sure to use the 4-core VCTF cable (non-shielded) having 0.3 to 2.0mm^2 conductor cross section. In addition, if you connect cables of different types to each other, be sure to select cables having the same cross section. If you connect cables having different cross sections to each other, abnormal communication signals may be output, and abnormal operation of the system may be caused.
- The cables commercially available have different performances.
  Before using these cables, be sure to check operation.

Note: The VCTF cord is the vinyl cabtyre cord that conforms to the requirements of JIS C 3306 'Polyvinyl chloride insulated flexible cords.'

Extension of exclusive 4-core flat cables

Hook-up the cables using the **SL-J3A** hook-up connector for cable extension to extend the cable.
(For a detailed description of the hook-up method, refer to pages 37, 38 and 41 to 43.)

Extension of cable excluding exclusive 4-core flat cables

Use a connector or junction terminal block commercially available to extend the cable.

Extension of cable to I/O device

Use the snap male connector (**SL-CP1**, **SL-CP2**, or **SL-CP3**) and the snap female connector (**SL-CJ1** or **SL-CJ2**) to extend the cable to the I/O device.

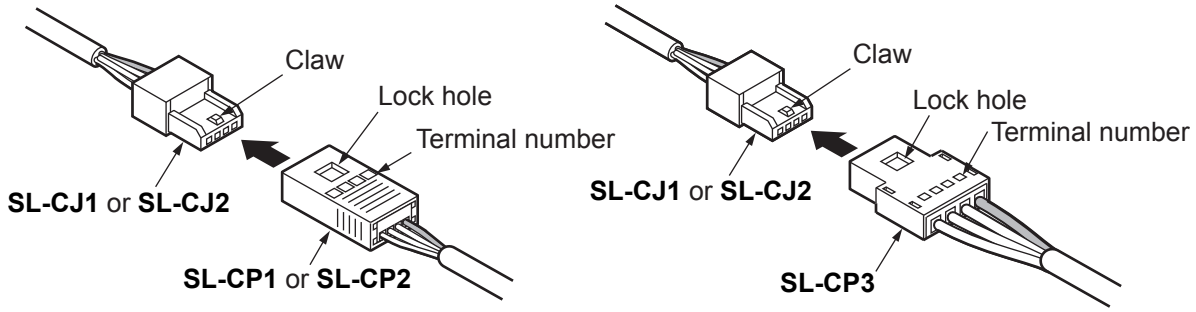

NOTE The snap male connector and the snap female connector cannot be connected to each other if they are in a wrong direction. To connect these connectors, be sure to check the terminal number marked on each connector.

Installation

Installation of each unit

There are 3 unit installation methods.
Considering the installation conditions, select an optimum installation method.

- Installation using screws
- Installation on 35mm width DIN rail
- Installation on board (for **SL-VMC1** and **SL-VM□ / VMP□** only)

⚠ CAUTION

Regarding the ambient conditions, check the following items, and then install each unit:
- Check that the address setting switches, etc. are valid.
- Check that covers can be opened or closed.
- Check that a heat radiation space (10mm or more) can be secured between the unit and the wall.
- Check that indicators are visible.
- Check that cables can be disconnected and reconnected.

- **Installation using screws**

  Install each unit using M4 pan head screws.
  For the screw tightening torque, refer to the product specifications (**Chapter 4**).

- **Installation on 35mm width DIN rail**

  1. Preliminarily attach the DIN rail stopper to the unit.
  2. Attach the back of the installed stopper to the 35mm width DIN rail.
  3. Press the front of the unit to the rail so that the front of the installed stopper can be attached to the 35mm width DIN rail.

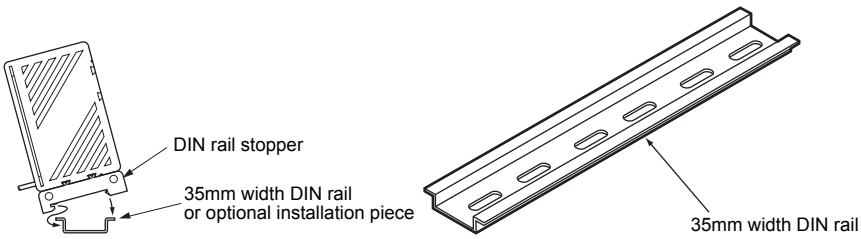

- **Removal from 35mm width DIN rail**

  Insert a flathead screwdriver into the DIN rail stopper, and then pull out the stopper until the stopper can be locked.

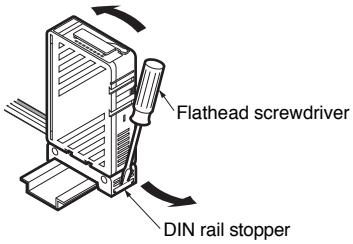

NOTE Prepare M4 pan head screws and 35mm width DIN rail separately.

- **Installation on board (for SL-VMC1 and SL-VM□ / VMP□ only)**

  Solder pins and terminals at 260°C or less within 10 seconds.

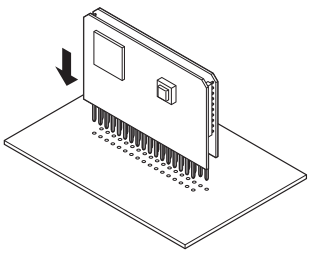

- **To install the picking switch SL-VPK0□ on the pipe:**

  1. Remove the socket head hex bolt used for fixing the holder [M6 (length 15 mm)].
  When doing this, remove the pipe mounting holder as well.

  2. Align the connecting piece of the product with the connecting piece of the pipe mounting holder so that the pipe is gripped between these pieces.
  You can align the connecting pieces easily by shifting them up and down during alignment work.

  3. Install the product using the socket head hex bolt for fixing the holder that you removed in step ***1***.

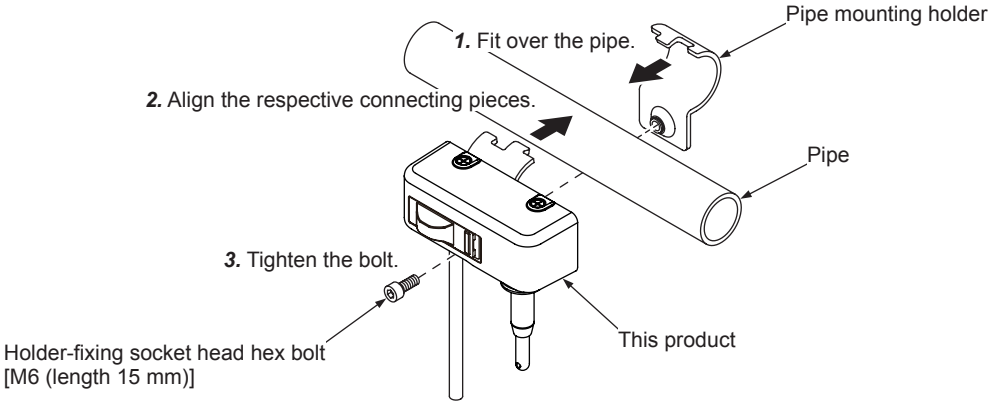

- **To attach a shutter on the picking switch for shutter, SL-VPK02:**

  Attach the shutter to the movable arm on this product.
  Use the accessory arm plate, plate-fixing screws [M4 truss head screws (length: 12mm)], and plate-fixing spring washers to attach the shutter.

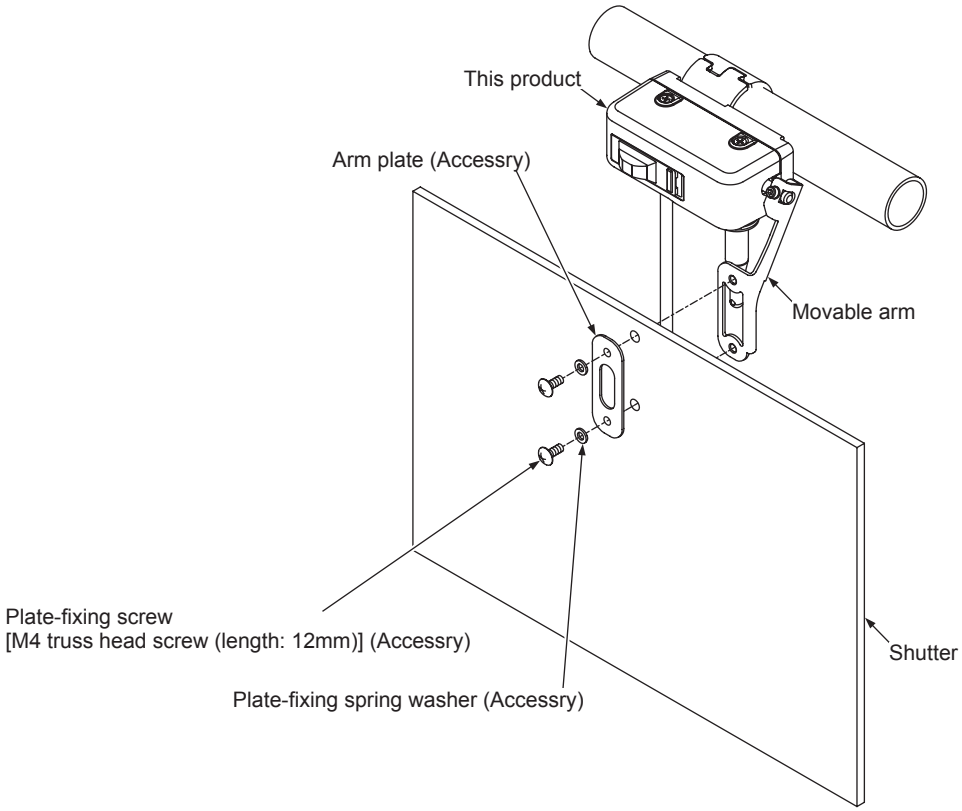

Construction

Power Supply

⚠ DANGER

Observe the following items to connect a power supply unit:

- Select a power supply unit having short-circuit protective function (fuse, etc.).
- The power of the **S-LINK V** system passes through the inside of each unit and is then supplied to the main cable or I/O device side. However, the short-circuit protective function is not adopted.
  For this reason, adopt a short-circuit protective function, such as a fuse, for the power supply circuit.
- Before starting the wiring work, be sure to turn off the power. If the power is not turned off, the system may be shorted or damaged, and you may get an electric shock.
- Take care that wrong wiring will damage the product.
- If power is supplied from a commercial switching regulator, ensure that the frame ground (F.G.) terminal of the power supply is connected to an actual ground.
- Do not use during the initial transient time after the power supply is switched on. Note that if the READY output signal of the **SL-VCU1** or **SL-VMC1** is off, or if the controller, control board, control module, or handy monitor is in the BUSY mode (in the power-on or system setting), transmission will not be possible.
- In this section, the main power supply unit means the power supply unit that activates the communication and connection units of the **S-LINK V** system. In addition, for the control units (PLC, personal computer, etc.) to which the **S-LINK V** units are connected, separate power supply units that conform to the specifications of the control units are needed.
  For a detailed description, refer to the instruction manual of each unit.
- If it takes a long time to turn on or off the power, use a timer relay so that the power can be supplied after stabilization.

Power supply to system

Supply the stabilized power (24V DC $^{+10}_{-5}$%) to the system.

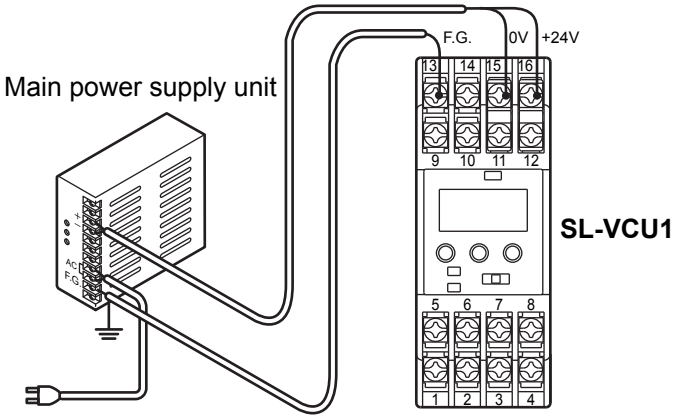

NOTE

- For the I/O devices to be controlled by the **S-LINK V** system, separately connect local power supply units considering the installation conditions and power supply conditions.
- For the I/O units, the supply voltage should be 24V DC ±10%. Refer to pages 96 to 148.

Chapter 2

Connection of Each Unit

Connection of controller

NOTE

- For a detailed description of the following controllers, refer to their respective user's manuals.
  SL-VGU1-C, **SL-VGU1-D** : **SL-VGU1-C** / **SL-VGU1-D** User's Manual
  SL-VGU1-EC : **SL-VGU1-EC** User's Manual
  SL-VGU1-485 : **SL-VGU1-485** User's Manual
- For a detailed description of the control module, refer to the '**S-LINK V Control Module Product Specifications**.'
- For a detailed description of the handy monitor, refer to the '**S-LINK V Handy Monitor Instruction Manual**.'

1. Connect the power supply unit and the F.G. terminal to the controller.
(For the caution regarding connection of the power supply unit, refer to page 50.)

2. Connect the control cable and the transmission cable to the controller.

Terminal No.		Cable color	Terminal name
Control cable	1	Black	G
	2	White	D
	3	Blue	0V
	4	Brown	+24V
Transmission cable	9	Black	G
	10	White	D
	11	Blue	0V
	12	Brown	+24V

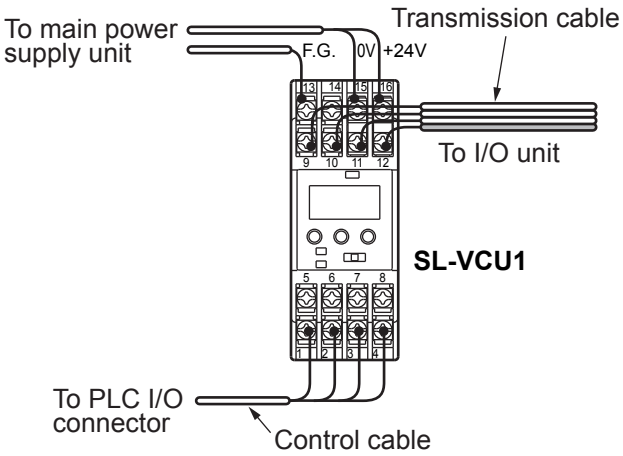

NOTE

Before connection, check the cable color and the terminal number for correct connection.

3. Connect the error output cable to the controller, if necessary.

Terminal No.	Output
5	ERROR OUT 1
6	ERROR OUT 2
7	READY
8	COM.

Note: The COM. (terminal No.8) and 24V (terminal No.16) terminals are connected internally.
For a detailed description, refer to page 78.

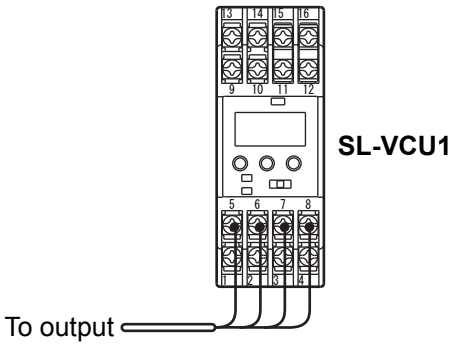

Connection of bus direct-connection type controller and control board

1. Connect the power supply unit and the F.G. terminal to the control board.

2. Connect the exclusive 4-core flat cable (0.5mm^2) or 4-core VCTF cable (non-shielded) having conductor cross section of 0.3 to 2.0mm^2 to the control board.

Note: The VCTF cord is the vinyl cabtyre cord that conforms to the requirements of JIS C 3306 'Polyvinyl chloride insulated flexible cords.'

<SL-VFP2, SL-VMEL-Q>

Pin No.	Terminal name	Remarks
1	F.G.	Frame ground
2	+24V	External power input
3	0V	
4	+24V	Brown
5	0V	Blue
6	D	White
7	G	Black

- Applicable terminal block connector
  SL-VFP2: ECH381RM-07P (with flange)
  (Manufactured by DINKLE ENTERPRISE CO., LTD.)
  SL-VMEL-Q: 2ESDVM-07P (with flange)
  (Manufactured by DINKLE ENTERPRISE CO., LTD.)

<SL-VFP2>

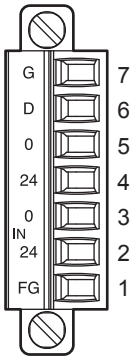

<SL-VMEL-Q>

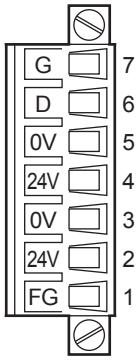

<SL-VPCI>

Terminal No.	Terminal name	Remarks
1	G	Black
2	D	White
3	0V	Blue
4	+24V	Brown
5	0V	External power input
6	+24V	
7	F.G.	Frame ground

- Applicable terminal block connector
  MSTB 2517-STF-5.08 (with flange)
  (Manufactured by Phoenix Contact)

<SL-VPCI>

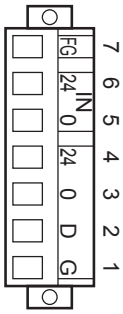

<SL-VVMES2>

Terminal No.	Terminal name	Remarks
1	F.G.	Frame ground
2	+24V	External power input
3	0V	
4	+24V	Brown
5	0V	Blue
6	D	White
7	G	Black

- Applicable terminal block connector
  MSTB 2517-STF-5.08 (with flange)
  (Manufactured by Phoenix Contact)

<SL-VVMES2>

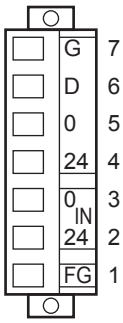

NOTE Before connection, check the cable color and the terminal number for correct connection.

Connection of PLC I/O Connector

To connect the system to the PLC, use the PLC I/O connector applicable for the I/O module of each manufacturer.

1. Insert the PLC I/O connector into the input and output modules, respectively.

⚠ CAUTION

Turn off the power, and then insert the PLC input and output connectors all the way into the PLC (so that the connectors cannot be disconnected).
If a connector is not inserted all the way, the connector may cause imperfect contact, and the system may malfunction.

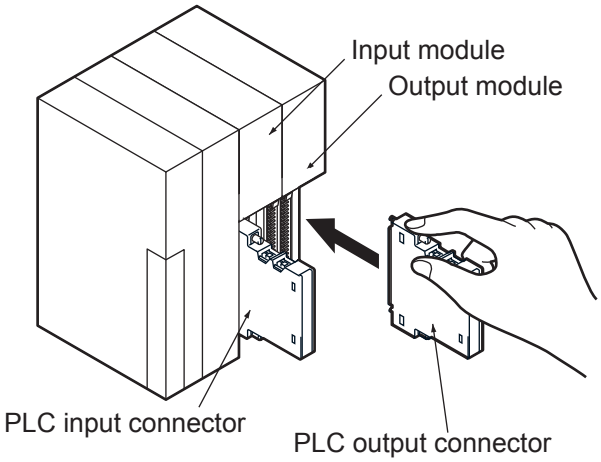

NOTE

- Connect the PLC input connector to the input module of the PLC, and the PLC output connector to the output module of the PLC.
- Be sure to check the manufacturer (model number) of the PLC, and confirm that the PLC I/O connector is applicable for the PLC. For a detailed description, refer to pages 155 to 156.

2. Using screws, fix the PLC input and output connectors to the PLC input and output modules.

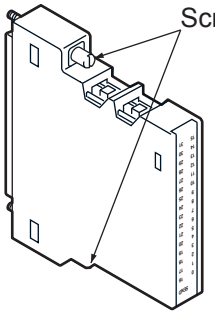

The MIL connectors (**SL-VS1 / VP1**, **SL-VS6 / VP6**, and **SL-VS8 / VP8**) are designed for the I/O modules manufactured by Panasonic Industrial Devices SUNX Co., Ltd., Hitachi, Ltd., Toshiba Machine Co., Ltd., or Rockwell Automation Japan (Allen Bradley), and these connectors do not have any screws. This is because the PLC I/O modules manufactured by these companies are equipped with the lock function.

3. Using the connector link cable, connect the PLC input and output connectors to each other.
Each PLC I/O connector has 2 connector terminals.
The connector link cable can be connected to either terminal.
Be sure to attach the connector cap to the unused connector terminal at the end.
(To select a connector link cable, refer to page 172.)

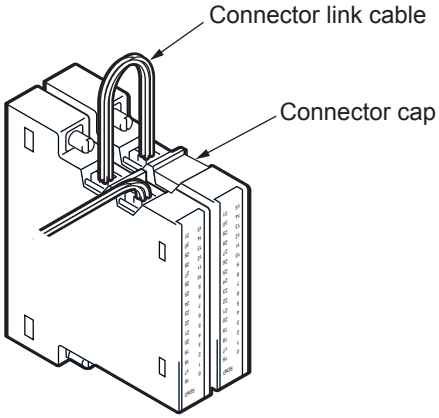

> NOTE
> For each controller, up to 16 PLC I/O connectors (16 connectors × 32 points = 512 points) can be connected.

4. Using the control cable, connect the controller to the PLC I/O connectors.

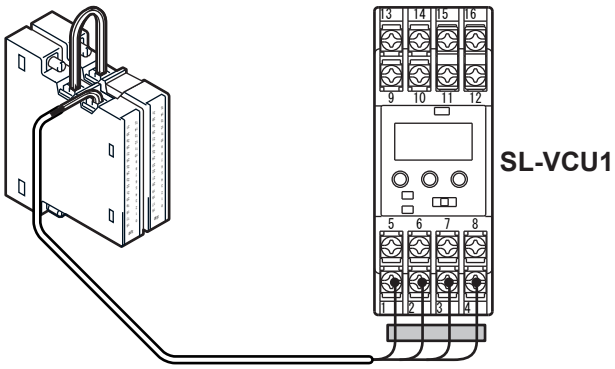

> NOTE
> - One control cable can connect up to 8 PLC I/O connectors to the controller.
> - To connect 9 or more PLC I/O connectors, use 2 control cables. When connecting the control cables to the controller use crimp-style terminals. In this case, overlap the crimp-style terminals of both cables, and connect them to the terminals.

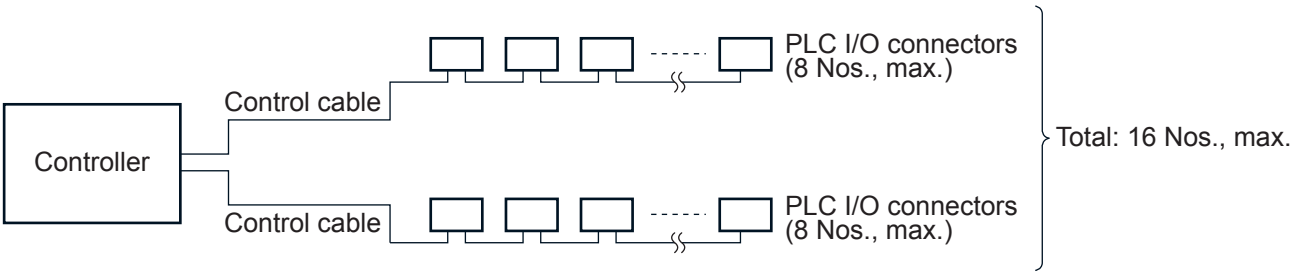

Connection of I/O unit

To connect an I/O unit to the exclusive 4-core flat cable, select the optimum connection method depending on the specifications of the I/O unit cable.

- **If the I/O unit cable is a flat cable having conductor cross section of 0.5mm^2:**
  - Use the **SL-J1A** or **SL-J3A** hook-up connector for connection.
    (For the hook-up method, refer to pages 37, 38 and 41 to 43.)

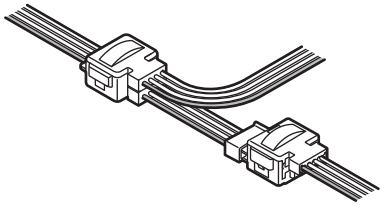

> NOTE
> Before connecting a hook-up connector, check that the wire colors of both cables are in the same order.

- **If the I/O unit is connected to the terminal block:**
  - Connect the cable to the terminal block.
    Attach the crimp-style terminals to the exclusive 4-core flat cable.
    After that, check the wire colors and the terminal names, and then tighten the screws of the terminal block.
    (Both the 'T' - branch and the crossover wiring are possible.)
    For the connection method, refer to page 46.
    For the terminal arrangement, refer to the drawings shown on pages 101 and 105.

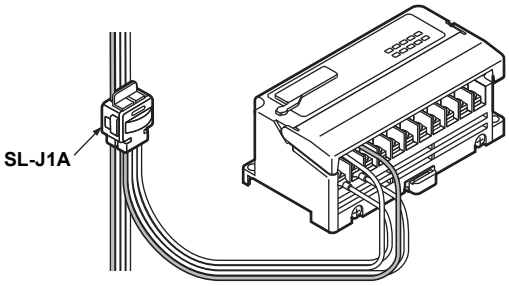

<'T' - branch>

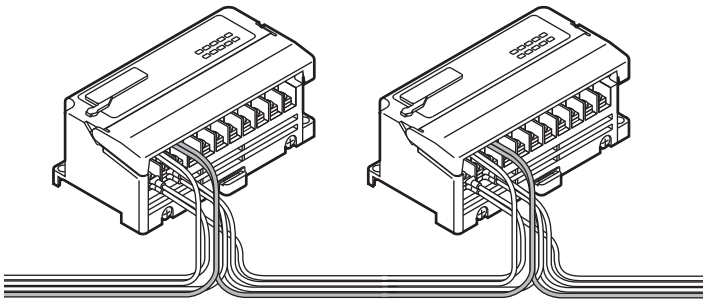

<Crossover wiring>

Connection of I/O device

⚠ CAUTION

Connect input device to the **SL-VT□E**, and connect output device to the **SL-VTP□E**. If it is connected wrong, it may cause brekage.

The I/O device connection method depends on the connection-to unit.

- **To connect an I/O device to the SL-VT□J and SL-VTP□J**

1. Attach the **SL-CP1**, **SL-CP2**, or **SL-CP3** snap male connector to the cable distributed from the I/O device. (For the hook-up method, refer to pages 37, 38, and 44, 45.)

Pin No.	Input device	Output device
1	+24V	
2	0V	
3	Input	No connection
4	No connection	Output

2. Connect the snap connector to the connector I/O unit.

⚠ CAUTION

Insert the snap male connector all the way into the slot.
If the connector is not inserted all the way into the slot, the connector may cause imperfect contact, and the system may malfunction.

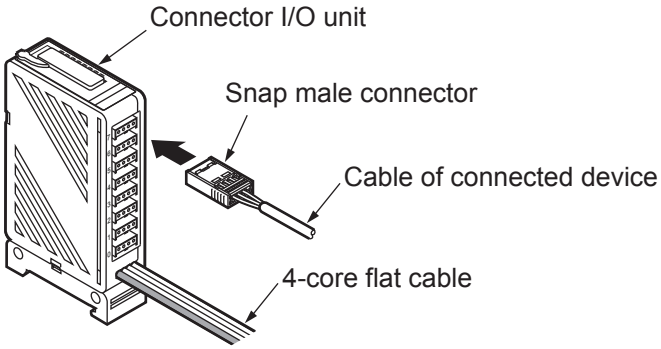

- To connect an I/O device to the **SL-VT□E** and **SL-VTP□E**
- Connect an e-CON conforming connector (4P type) that is launched by various manufactures to the cable distributed from the I/O device.
  (For the instruction of e-CON spec. based connector, contact manufactures of e-CON conforming connector.)

Pin No.	Input device	Output device
1	+24V	
2	N.C.	
3	0V	
4	Input	Output

Note: Make sure that the pin configuration is different between **SL-VT□J** and **SL-VT□E**.

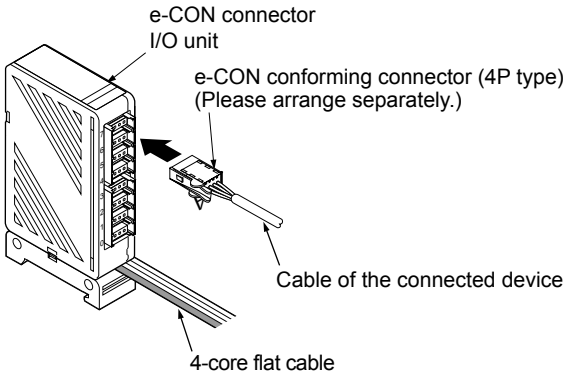

- **To connect an I/O device to a 16-channel MIL connector I/O unit:**

1. Connect the cable equipped with MIL connector to the input or output device.

2. Connect the cable equipped with MIL connector to the I/O unit.

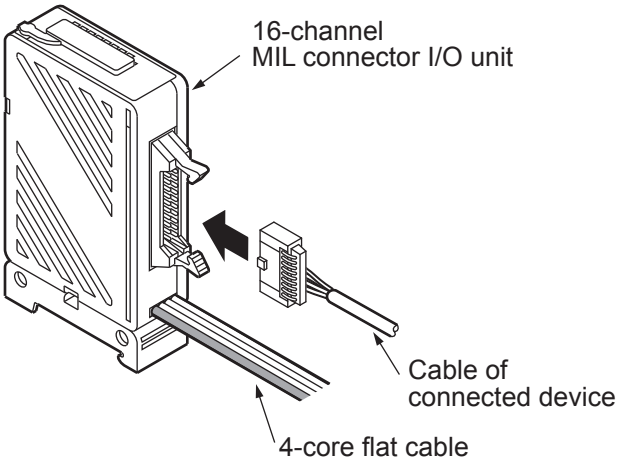

- **To connect an I/O device to an I/O terminal:**

1. Hook-up the crimp-style terminals to the input or output device cable.
(For a detailed description, refer to page 46.)

2. Connect the I/O device cable to the I/O terminal using a screwdriver.

Connection of main line cable to end unit

Connect the **SL-VEU** end unit as follows:

- **Connect the end unit to the end of the main line.**
  (For the hook-up method, refer to pages 37, 38 and 41 to 43.)
- **If a branch line length exceeds 80% of the maximum communication distance, connect an end unit to the end of the branch line.**
  (For a detailed description, refer to page 18.)

Connection of local power supply unit

Considering various conditions (total current consumption, voltage drop, etc.), if you judge that a local power supply unit is necessary for the **S-LINK V** system, connect a local power supply unit.

⚠ DANGER

Observe the following items to connect a power supply unit:

- Select a power supply unit having short-circuit protective function (fuse, etc.).
- The power of the **S-LINK V** system passes through the inside of each unit and is then supplied to the main cable or I/O device side.
  However, the short-circuit protective function is not adopted for this power supply circuit.
- Do not connect the main power supply to the local power supply, or connect two local power supplies.
- Before starting the wiring work, be sure to turn off the power. If the power is not turned off, the system may be shorted or damaged, and you may get an electric shock.
- Take care that wrong wiring will damage the product.
- If power is supplied from a commercial switching regulator, ensure that the frame ground (F.G.) terminal of the power supply is connected to an actual ground.
- Do not use during the initial transient time after the power supply is switched on.
- For the control units (PLC, personal computer, etc.) to which the **S-LINK V** units are connected, separate power supply units that conform to the specifications of the control units are needed. For a detailed description, refer to the instruction manual of each unit.
- If it takes a long time to turn on or off the power, use a timer relay so that the power can be supplied after stabilization.

Local power supply to system

Supply local power to the **S-LINK V** system from the I/O terminal or a commercial junction terminal block. Be sure to supply stabilized power (24V DC ±10%).

<To supply local power to I/O terminal>

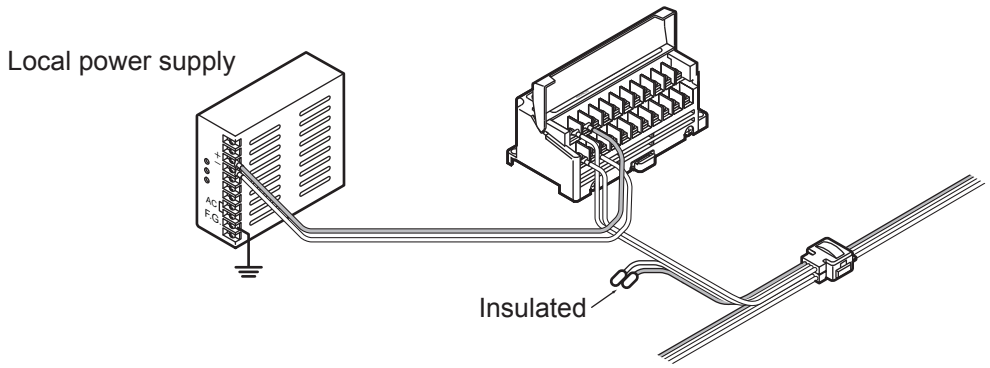

<To supply local power to main line>

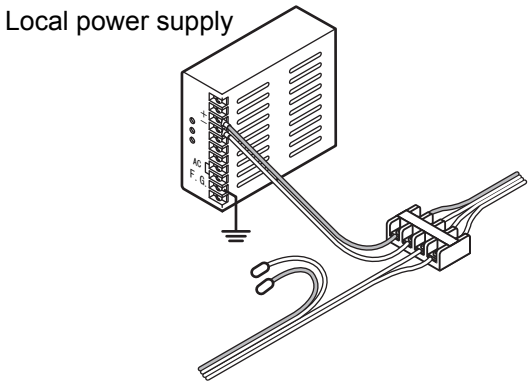

Installation method of batteries

The address setting remote controller **SL-VAR1** requires two AAA alkaline batteries.
For a detailed description to install the batteries, refer to following procedure.

⚠ CAUTION

Be sure to turn OFF the power of the product before installing or replacing the batteries.

1. Remove the body from the silicon cover.

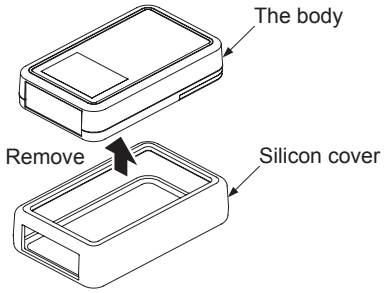

2. Slide the battery cover on the back side of the body to remove the cover.

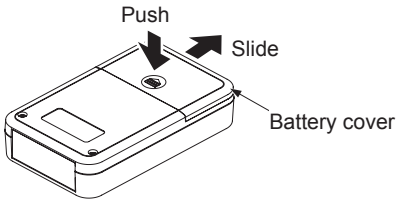

3. Pay attention to the “+” and “-” directions, and install the AAA alkaline batteries into the battery box.

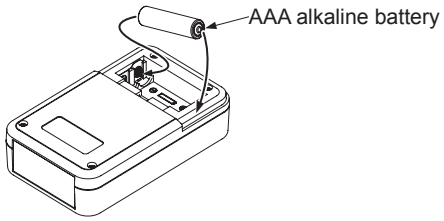

4. Slide the battery cover onto the body to attach the cover.

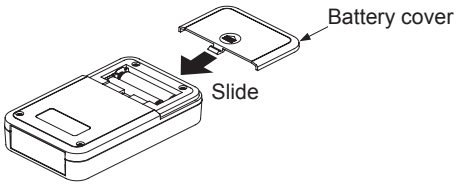

5. Turn over the body and insert it into the silicon cover.

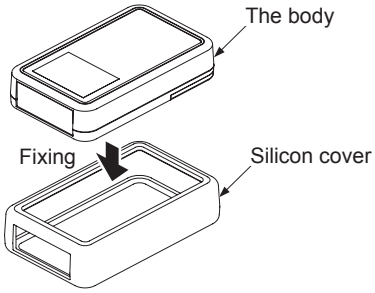

MEMO

Chapter 3
Starting System

Flowchart

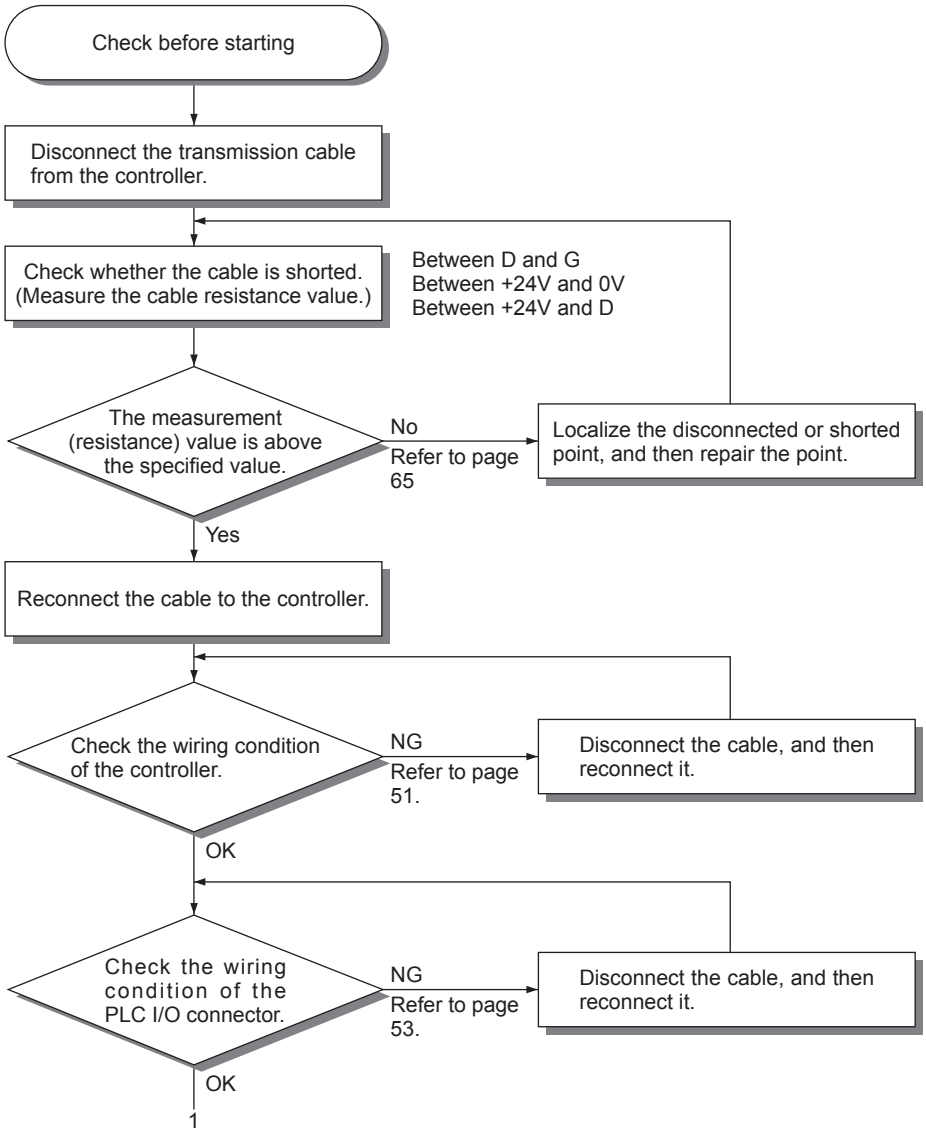
Check before starting
Disconnect the transmission cable from the controller.
Check whether the cable is shorted. (Measure the cable resistance value.)
Between D and G
Between +24V and 0V
Between +24V and D
The measurement (resistance) value is above the specified value.
No
Refer to page 65
Localize the disconnected or shorted point, and then repair the point.
Yes
Reconnect the cable to the controller.
Check the wiring condition of the controller.
NG
Refer to page 51.
Disconnect the cable, and then reconnect it.
OK
Check the wiring condition of the PLC I/O connector.
NG
Refer to page 53.
Disconnect the cable, and then reconnect it.
OK
1

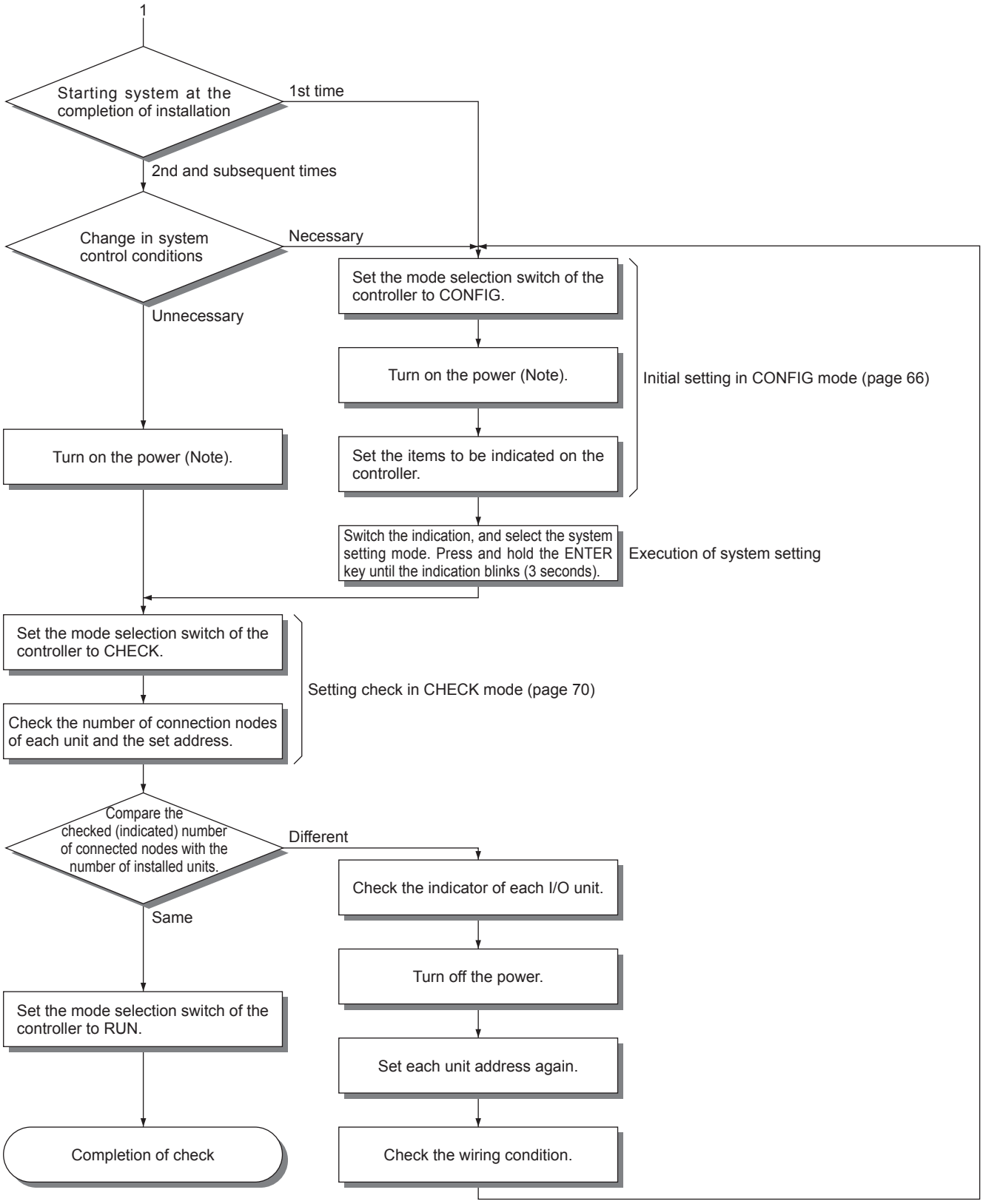

Note: If both the main and local power supply units are connected, be sure to turn on the local power supply unit first.

Wiring Check

Check before Starting

Before turning on the power of the **S-LINK V** system, be sure to check the following items:

- Check the wiring conditions of the controller and the control board.
- Check the PLC I/O connectors.
- Check the cable for short-circuit.
- Check the connected condition of the end unit.

Check of wiring conditions of controller and control board

NOTE

- For a detailed description of the following controllers, refer to their respective user's manuals.
  SL-VGU1-C, **SL-VGU1-D** : **SL-VGU1-C** / **SL-VGU1-D** User's Manual
  SL-VGU1-EC : **SL-VGU1-EC** User's Manual
  SL-VGU1-485 : **SL-VGU1-485** User's Manual
- For a detailed description of the control module, refer to the '**S-LINK V Control Module Product Specifications**.'
- For a detailed description of the handy monitor, refer to the '**S-LINK V Handy Monitor Instruction Manual**.'

Visually check the terminals and connection cables (connection-to units) of the controller and the control board.

<SL-VCU1>

Pin No.	Terminal name	Connected to	
1	G (BK)	Black	Control cable
2	D (WH)	White	
3	0V (BU)	Blue	
4	+24V (BN)	Brown	
5	ERROR OUT 1	External control unit	
6	ERROR OUT 2		
7	READY		
8	COM.		
9	G (BK)	Black	Transmission cable
10	D (WH)	White	
11	0V (BU)	Blue	
12	+24V (BN)	Brown	
13	F.G.	Controller power supply unit	
14	F.G.		
15	0V		
16	+24V		

<SL-VFP2, SL-VMEL-Q>

Pin No.	Terminal name	Connected to	
1	F.G.	Frame ground	
2	+24V	External power input	
3	0V		
4	+24V	Brown	Transmission cable
5	0V	Blue	
6	D	White	
7	G	Black	

<SL-VPCI>

Pin No.	Terminal name	Connected to	
1	G	Black	Transmission cable
2	D	White	
3	0V	Blue	
4	+24V	Brown	
5	0V	External power input	
6	+24V		
7	F.G.	Frame ground	

<SL-VVMES2>

Pin No.	Terminal name	Connected to	
1	F.G.	Frame ground	
2	+24V	External power input	
3	0V		
4	+24V	Brown	Transmission cable
5	0V	Blue	
6	D	White	
7	G	Black	

Check of PLC I/O connectors

Check each PLC I/O connector for the following items:

- Check that the PLC I/O connector is applicable for the I/O module manufactured by the PLC manufacturer.
- Check that a PLC input connector is connected to the PLC input module, and a PLC output connector to the PLC output module.
- Check that the PLC I/O connector numbers are correctly set.
- Check that a connector link cable is used for connection of the PLC input and output connectors to each other.
- Check that a connector cap is attached to the unused PLC I/O connector terminal at the end.
- Check that a control cable is used for connection of PLC I/O connectors to the controller.
- Check that the number of PLC I/O connectors connected to each control cable is 8 connectors or less.

Check of cable for short-circuit

⚠ CAUTION

- Use an analogue tester to measure the resistance.
  If you use a digital tester, the tester may not indicate correct values.
  This is because the polarity of the tester inner circuit is not appropriate.
- Before measurement, disconnect the cable from the terminal block of the controller or the control board. If the cable is connected, correct measurement values cannot be obtained.
- Before disconnecting the cable, put a mark or lead wire color on the cable. If the cable is disconnected without any mark, you may reconnect the cable to a wrong terminal after measurement.

Disconnect the transmission cable from the terminal block of the controller or the control board.
Using an analogue tester, measure the resistance value at the following points:

- Between D and G (Resistance value: Several kΩ or more)
- Between +24V and 0V (Resistance value: Several kΩ or more)
- Between +24V and D (Resistance value: Several kΩ or more)

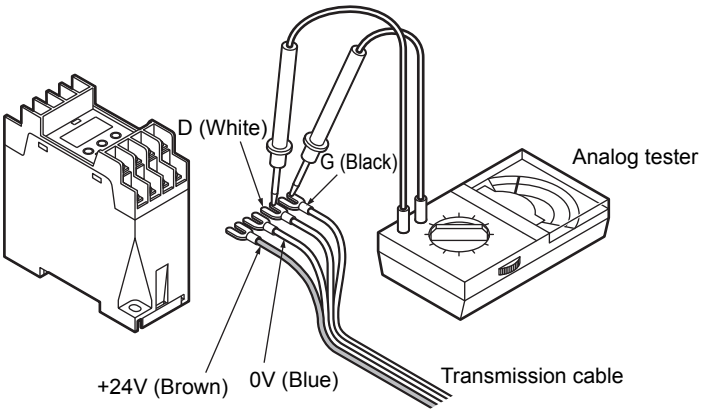

Starting

Power-on (Main Power and Local Power)

⚠ CAUTION

- To use both the main and local power supply units, turn on the local power supply unit first, and then turn on the main power supply unit, or turn on these power supply units at the same time.
- To turn on the power for the first time after installing the system, be sure to set the mode selector switch to 'CONFIG.'

At the completion of check before starting, turn on the power.
The **S-LINK V** system will be activated.

CONFIG mode

Settings for **SL-VCU1** are indicated in this section.

NOTE

- For a detailed description of the following controllers, refer to their respective user's manuals.
  SL-VGU1-C, **SL-VGU1-D** : **SL-VGU1-C** / **SL-VGU1-D** User's Manual
  SL-VGU1-EC : **SL-VGU1-EC** User's Manual
  SL-VGU1-485 : **SL-VGU1-485** User's Manual
- For a detailed description of the control module, refer to the '**S-LINK V Control Module Product Specifications**.'
- For a detailed description of the handy monitor, refer to the '**S-LINK V Handy Monitor Instruction Manual**.'

In the CONFIG mode, the displayed items depend on the CONFIG mode selection timing.

- **If the system is switched to the CONFIG mode before power-on:**
  - Each item can be set.
- **If the system is switched to the CONFIG mode after power-on:**
  Difference from the above-described case (CONFIG mode selection before power-on) is the following two points:
  - The default items will not be displayed.
  - The set value of each item is displayed, but changing the set value is not possible.

  However, the display mode between the decimal number display mode and the hexadecimal number display mode can be switched. In addition, the system setting function can be activated.

In case of **SL-VCU1**

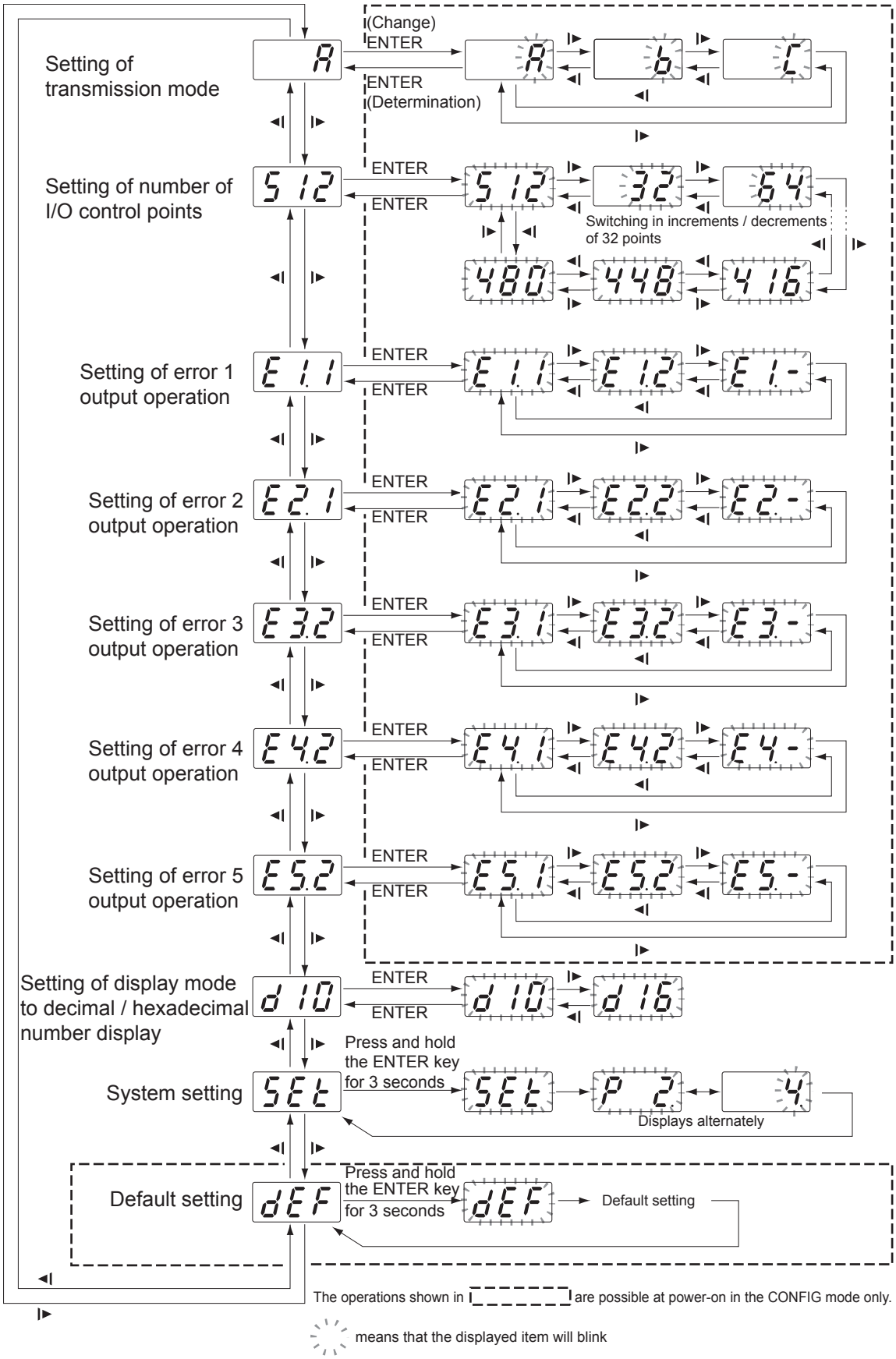

Mode setting	Operation	Description / Function	Indication
Setting of transmission mode	In the CONFIG mode, turn on the power.	Displays the current transmission mode.	e.g.) A
	Press ENTER key.	Blinks the displayed current transmission mode.	If A mode is selected: A
	Press ◄I key or I► key.	Selects the transmission mode from the three types (A mode, B mode and C mode), and then displays the selected mode.	If B mode is selected: b If C mode is selected: C
	Press ENTER key.	Determines the transmission mode.	e.g.) A
Setting of number of I/O control points	Press I► key.	Displays the number of I/O control points.	e.g.) 512
	Press ENTER key.	Blinks the displayed number of I/O control points.	If 512 points is selected: 512
	Press ◄I key or I► key.	Selects the number of I/O control points in the range of 32 to 512 points. Selection is possible in increments / decrements of 32 points.	If 32 points is selected: 32
	Press ENTER key.	Determines the number of I/O control points.	e.g.) 512
Setting of error 1 output operation	Press I► key.	Displays the error 1 output operation.	e.g.) E1.1
	Press ENTER key.	Blinks the displayed error 1 output operation.	Error output 1 E1.1
	Press ◄I key or I► key.	Selects the external output type for the detected error from the following three types: 1: Turns off the error output 1 of the controller. 2: Turns off the error output 2 of the controller. -: Will not turn off any error output.	Error output 2 E1.2 No error output E1.-
	Press ENTER key.	Determines the error 1 output operation.	e.g.) E1.1
Setting of error 2 to 5 output operation	Same as error 1 output operation (Switching in the order of errors 2, 3, 4, and 5)	Same as error 1	Same as error 1

Mode setting	Operation	Description / Function	Indication
Setting of display to decimal / hexadecimal number display	Press ▌► key.	Displays the code of the decimal / hexadecimal number setting.	e.g.) d 10
	Press ENTER key.	Blinks the displayed code of the decimal / hexadecimal number setting.	Decimal number display d 10
	Press ◄▌ key or ▌► key.	Selects either the decimal or hexadecimal number display.	Hexadecimal number display d 16
	Press ENTER key.	Determines the display. (If the hexadecimal number display is selected, the hexadecimal number display mode indicator will light up.)	e.g.) d 10
System setting	Press ▌► key.	Displays the code of the system setting.	SEt
	Press and hold ENTER key until the displayed code flashes (for 3 seconds).	Enters the system setting (blinks).	e.g.) SEt
		Alternately displays the number of connected PLC I/O connectors and the number of connected nodes (number of connected I/O units).	If 2 PLC I/O connectors are connected: P 2 If 4 I/O units are connected: 4 End SEt
Default setting	Press ▌► key.	Displays the code of the default setting mode.	dEF
	Press and hold ENTER key (for 3 seconds).	Displays the indicator check pattern, and sets the default values.	dEF
		Sets the items to the initial conditions (default values) in the CONFIG mode. Clears the addresses of all the units specified in the system setting.	End dEF

Controller setting default values (values set in our factory before delivery:)

A	S 12	E 1.1	E 2.1	E 3.2
Transmission mode	Number of I/O control points	Error 1 output operation	Error 2 output operation	Error 3 output operation
E 4.2	E 5.2	d 10		
Error 4 output operation	Error 5 output operation	Decimal / Hexadecimal number display		

Check of Recognized Addresses

Set the mode selector switch to CHECK. In the CHECK mode, the number of connected PLC I/O connectors, number of connected nodes (number of connected I/O units), and recognized addresses will be displayed.

CHECK mode

Operation	Description / Function	Decimal number display	Hexadecimal number display
Set the mode selection switch to CHECK.	Displays the number of recognized PLC I/O connectors.	P 3	P03
Press I► key.	Displays the number of recognized nodes (number of I/O units connected to the controller.)	5	005
Press I► key. Press I► key. (Repeatedly press this key to display all the connected con-necotrs)	Displays the recognized PLC I/O connector numbers from the smallest number to the largest number.	P 0 ↓ I► P 1 :	P00 ↓ I► P01 :
Press I► key. Press I► key. (Repeatedly press this key to display all the connected con-necotrs)	Displays the recognized I/O connector address numbers from the smallest number to the largest number.	0 ↓ I► 10 :	000 ↓ I► 00A :

Notes: 1) Use ◄I key to display the numbers in the reversed order.
2) Press and hold SELECT key (◄I key or I► key) to switch the displayed numbers at a high speed.
3) If the unit is the I/O mixed type, only the input addresses will appear.

Example: In the decimal number display

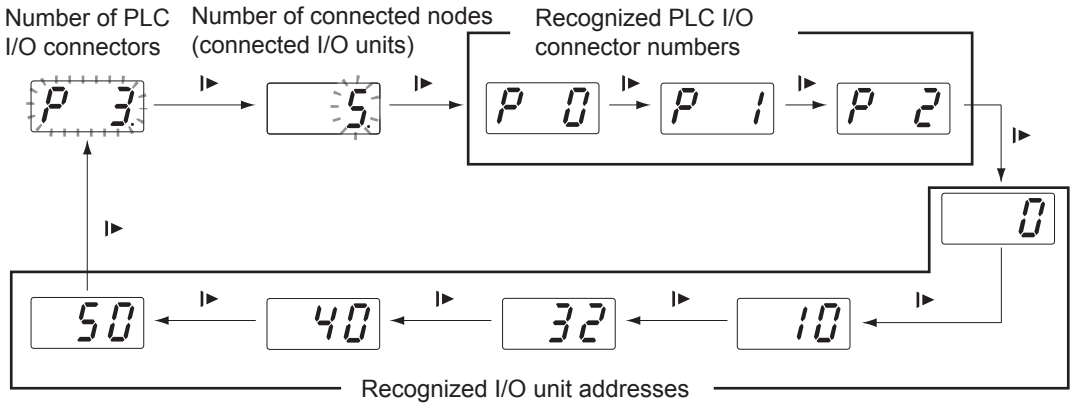

* A recognized address means the first digit of a unit address (address set by the address setting switch).

Chapter 4
Specifications

Specifications

Common Specifications

Transmission method	Bidirectional time-division multiple transmission method
Synchronization method	Bit synchronization method, frame synchronization method
Transmission procedure	**S-LINK V** protocol
Transmission speed	A mode: 110kbps B mode: 27.5kbps C mode: 6.9kbps
Refresh time (Note 1)	A mode: 0.29 to 10.32ms B mode: 1.18 to 41.29ms C mode: 4.70 to 165.15ms
Number of I/O control points	Max. 512 points
Number of connected nodes	Max. 256 nodes
Transmission distance	A mode: Max. 50m B mode: Max. 200m C mode: Max. 800m
Total cable length	A mode: 100m or less B mode: 400m or less C mode: 1,600m or less
Transmission cable	Exclusive 4-core flat cable (0.5mm^2) or 4-core VCTF cable (non-shielded) having conductor cross section of 0.3 to 2.0mm^2 (Note 2)

Notes: 1) For a detailed description of refresh time and response delay time, refer to page 28.
2) The VCTF cord is the vinyl cabtyre cord that conforms to the requirements of JIS C3306 'Polyvinyl chloride insulated flexible cords.'

Address setting switches

⚠ CAUTION

To change the set position (ON / OFF position) of an address setting switch, use a tool having a hard and sharp tip, such as a flathead screwdriver.

To set the address of each **S-LINK V** unit, use the address setting switches installed on each unit.

- **PLC I/O connector**

⚠ CAUTION

The connector number setting switches on each PLC I/O connector has different functions compared with the address setting switches on each I/O unit.

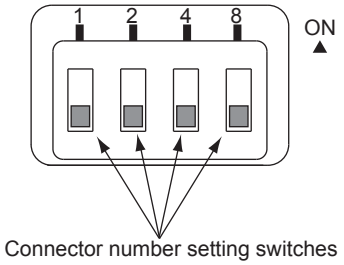

● Connector number setting switches

Be sure to set the PLC I/O connector numbers.
Each PLC I/O connector number will be determined from the sum total of the values set by the connector number setting switches.
The connector number setting range is 0 to 15.
The relation between the PLC I/O connector numbers and the I/O unit addresses are shown in the following table.

> NOTE
> One control cable can control up to 8 PLC I/O connectors. To control 9 or more PLC I/O connectors, use 2 control cables so that the number of connectors for each cable can be 8 or less.

<Example: Setting of PLC I/O connector numbers>

Connector number setting switches	PLC I/O connector number	**S-LINK V** I/O unit address
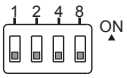	0	0 to 31
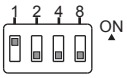	1	32 to 63
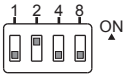	2	64 to 95
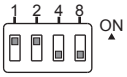	3	96 to 127
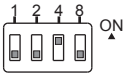	4	128 to 159
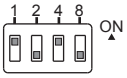	5	160 to 191
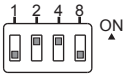	6	192 to 223
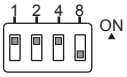	7	224 to 255
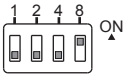	8	256 to 287
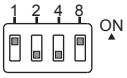	9	288 to 319
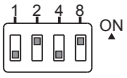	10	320 to 351
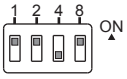	11	352 to 383
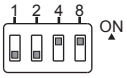	12	384 to 415
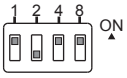	13	416 to 447
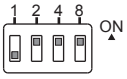	14	448 to 479
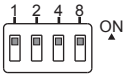	15	480 to 511

● Address setting switches

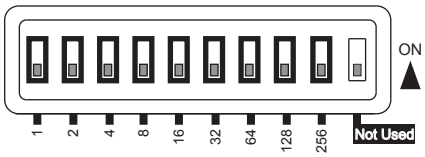

<Input unit>

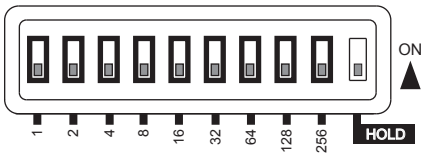

<Output unit>

⚠ CAUTION

The output unit has the 'HOLD' switch that can set the output holding function.
When you set the address, also set the output holding function.
For a detailed description of the output holding function, refer to page 32, and correctly set the function.

Be sure to set the address of each I/O unit.
Address is the numerical value set by the address setting switches. For the I/O module, the sum total of the address numbers [sum total of the ADD. (COM.)] (pin No.28) value and the shorted ADD. (256) to ADD. (1) (pin No.19 to 27) values will be the first address of the module. For a detailed description of the pin arrangement, refer to pages 136 and 138.
The address setting range is 0 to 511.

NOTE Set the address in the address setting range specified by the PLC I/O connector number.

<Example of address setting>

- To set the address to '3':
  1 + 2 = 3

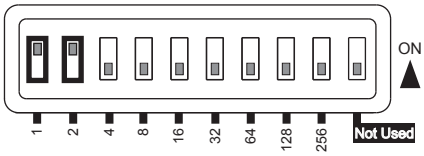

NOTE For the address setting list (ON / OFF statuses of address setting switches), refer to "**our website: https://panasonic.net/id/pidsx/global** ."

When the system is set, the controller will recognize the addresses shown in the following table:

Type	Model	Address recognized by controller
PLC input connector	**SL-VS□**	Value set by connector number setting switches
PLC output connector	**SL-VP□**	
Input unit	**SL-VCH10/20** **SL-VTB□** **SL-VT□J** **SL-VT□E** **SL-VT16C1** **SL-VTAD1** **SL-VM□** (Note)	Address set by address setting switches (first address)
Output unit	**SL-VCH11/22** **SL-VTBP□** **SL-VTP□J** **SL-VTP□E** **SL-VTP16C1**(**-S**) **SL-VTDA1** **SL-VTPR□** **SL-VMP□** (Note)	
I/O mixed unit	**SL-VCH21**	Address set by input-side address setting switches (first input address) The output address will not be recognized.

Note: Address setting switches are not incorporated in the **SL-VM□** and **SL-VMP□**.

Specifications of Each Unit

Controller

> NOTE
> For a detailed description of the following controllers, refer to their respective user's manuals.
> **SL-VGU1-C**, **SL-VGU1-D** : **SL-VGU1-C** / **SL-VGU1-D** User's Manual
> **SL-VGU1-EC** : **SL-VGU1-EC** User's Manual
> **SL-VGU1-485** : **SL-VGU1-485** User's Manual

Each system of the **S-LINK V** system needs one controller.

● Part description

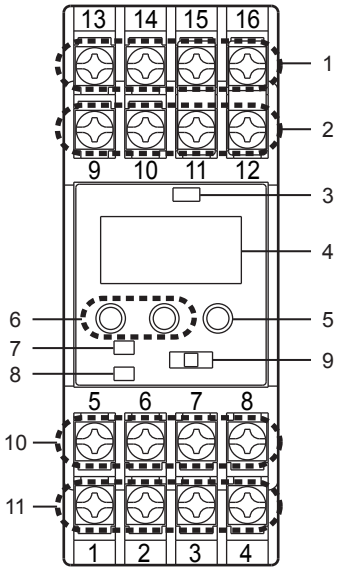

No.	Designation	Function	
1	Power supply terminal	13: F.G.	Supplies +24V, 0V, or F.G. power from the external power supply unit.
		14: F.G.	
		15: 0V	
		16: +24V	
2	Transmission cable terminal	9: G	Supplies +24V, 0V, D, or G power to the I/O unit.
		10: D	
		11: 0V	
		12: +24V	
3	Hexadecimal number display mode indicator (Orange)	Indicates the current display mode of the address display. • ON: The hexadecimal number display mode is selected. • OFF: The decimal number display mode is selected.	
4	Address display (Red)	The displayed item depends on the mode ('RUN,' 'CHECK,' or 'CONFIG' mode). Use the mode selector switch to switch the mode. **<RUN mode>** • Each transmission mode (3 modes in total) will be indicated by the following character, and the LED of each character will sequentially light just like rotating clockwise. A Mode B Mode 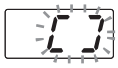 C Mode 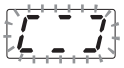 • If an error occurs, the error message will appear. Note: After eliminating the cause of the error, press ENTER key and SELECT keys (2 types of keys) at the same time. The error message will disappear. **<CHECK mode>** • The number of connected nodes will be displayed first. After that, each time SELECT key is pressed, the recognized addresses will be displayed one after another. Number of connected nodes: Using the decimal or hexadecimal number, the number of I/O units and the number of PLC I/O connectors will be displayed. Address: Using the decimal or hexadecimal number, the addresses of the I/O units and the PLC I/O connectors will be displayed sequentially. Note: In the hexadecimal number display mode, the hexadecimal number indicator (orange) lights up. **<CONFIG mode>** • Settings will be displayed sequentially. To switch the displayed setting, use SELECT key. • When RUN mode is switched to CONFIG mode, different item will be displayed compared with the displayed item just after power-on. For a detailed description, refer to page 66.	
5	ENTER key	Press ENTER key to determine the set condition value. In the system setting mode, press and hold ENTER key for 3 seconds or more, then the system will be set.	
6	SELECT keys	Use these keys to switch the displayed item or set item. Also use these keys to change the set condition value.	
7	Transmission mode indicator (Green)	This indicator will blink during transmission (when the transmission signal is being output). The indicator blinking cycle depends on the transmission speed.	
8	Error indicator (Red)	This indicator indicates the error status as follows: • Lights up when an error occurs. • Blinks when the cause of the error is eliminated.	
9	Mode selection switch	Switches the mode (RUN, CHECK, or CONFIG mode).	
10	Output terminal	5: Error output 1	Turns off the output transistor if an error occurs. For each error, you can select error output 1, 2, or no output.
		6: Error output 2	
		7: READY	Turns on the output transistor if the system is ready for transmission.
		8: COM. (+24V)	COM. terminal for READY signal output and error outputs 1 and 2
11	PLC connector terminal	1: G	Supplies +24V, 0V, D, or G power to the PLC I/O connector.
		2: D	
		3: 0V	
		4: +24V	

● Specifications

Type		Controller
Model No.		**SL-VCU1**
Supply voltage		24V DC $^{+10}_{-5}$%
Current consumption		135mA or less (excluding the load drive current of error output)
Connecting method		PLC I/O connector side: Multi-drop connection Signal transmission line side: 'T' - branch connection or multi-drop connection
Output	READY output	NPN open-collector transistor • Maximum sink current: 100mA (without short-circuit protective function) • Applied voltage: 30V DC or less (between output and 0V) • Residual voltage: 1.5V or less (at 100mA sink current)
	Error output 1	
	Error output 2	
Indicators	Transmission	Green LED (blinks during transmission)
	Error	Red LED (lights up when an error occurs, blinks when the error is eliminated)
	Hexadecimal number	Orange LED (lights up when the hexadecimal number display mode is selected to display the addresses)
Address display		3 digit red LED display (displays the number of connected nodes, recognized addresses, error addresses, etc.)
Environmental resistance	Ambient temperature	0 to +55˚C (No dew condensation) (Note), Storage: -20 to +70˚C
	Ambient humidity	10 to 90% RH, Storage: 10 to 90% RH
	Noise immunity	Power line: 500Vp, 10ms cycle, 1μs pulse width Common: 1,000Vp, 10ms cycle, 1μs pulse width (with noise simulator)
	Voltage withstandability	1,000V AC for one min. between all terminals connected together and enclosure
	Insulation resistance	20MΩ, or more, with 500V DC megger between all terminals connected together and enclosure
	Vibration resistance	10 to 150Hz frequency, 0.75mm amplitude or maximum acceleration 49m/s² in X, Y and Z directions for two hours each
	Shock resistance	294m/s^2 acceleration (30G approx.) in X, Y and Z directions for three times each
Mounting		Mounted on DIN rail or by tightening screws
Tightening torque		Terminal screw: 0.29 to 0.49N·m, Mounting screw: 0.78N·m or less
Material		Enclosure: ABS, Terminal area: PBT (with glass fibers), Protective cover: Polycarbonate
Weight		Approx.140g
Accessory		**NPS-CV** (Protective cover): 1 pc.

Note: If this product is stored in the control panel together with the other units, the temperature may rise above the specified operation temperature due to the heat generated by the other units.
In this case, install a cooling fan, etc. so that the ambient temperature can be in the specified range.

● I/O circuit diagram and terminal layout drawing

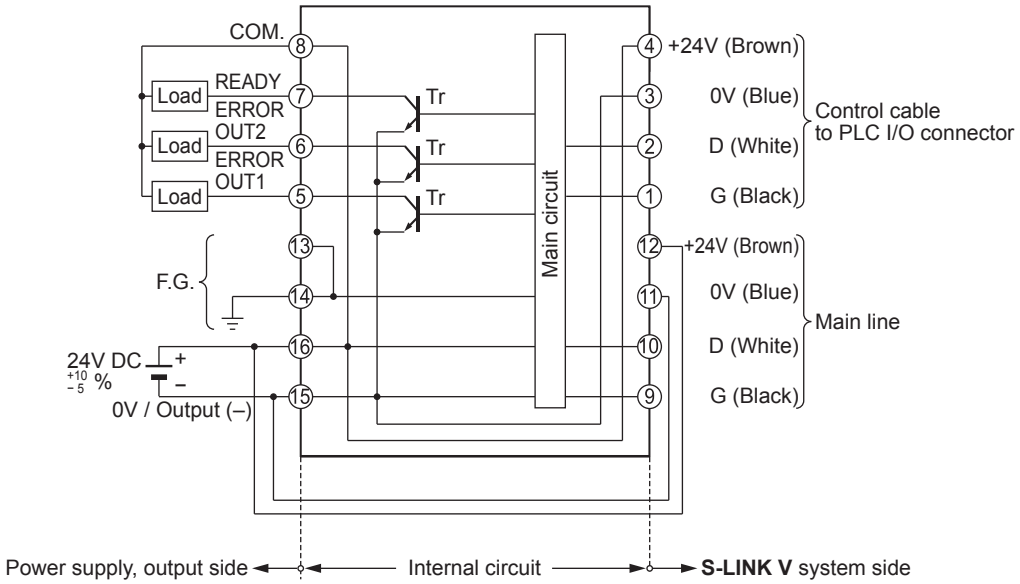

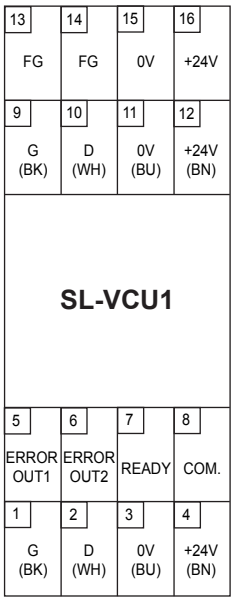

Notes: 1) Shorting pieces are attached to connect terminal 11 to terminal 15 and terminal 12 to terminal 16.
Do not remove these shorting pieces. If you remove these pieces, the system will not operate properly.
2) To connect a conductive load to the output line, be sure to use a protective device, such as a diode.
3) When an error occurs, ERROR OUT1 and OUT2 turn OFF.

● Dimensions (Unit: mm)

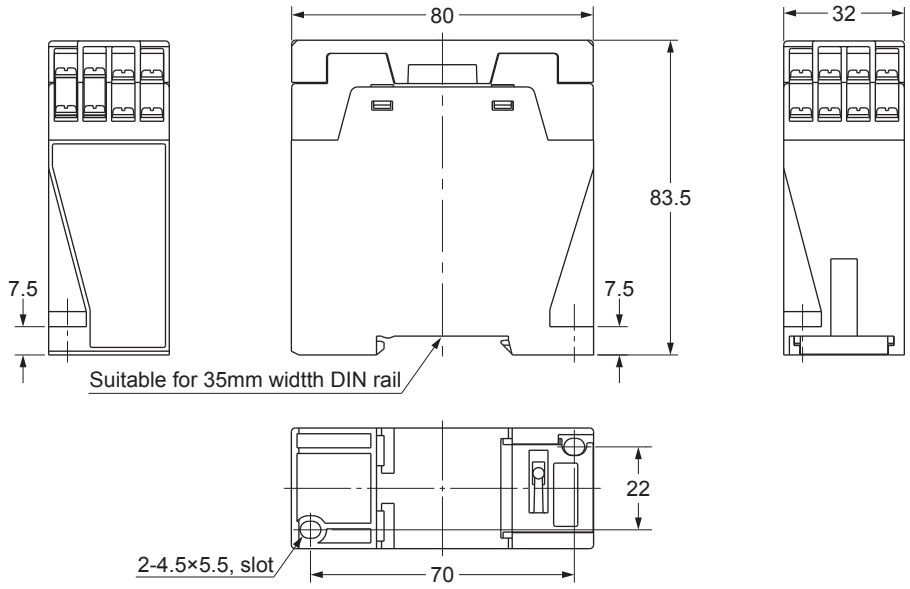

Bus direct-connection type controller for FP2 / FP2SH Series

NOTE

For a detailed description of the bus direct-connection type controller for **FP2** / **FP2SH** series (**SL-VFP2**), refer to the '**Bus direct-connection type controller for FP2 / FP2SH series (SL-VFP2) Instruction Manual**.'

● Part description

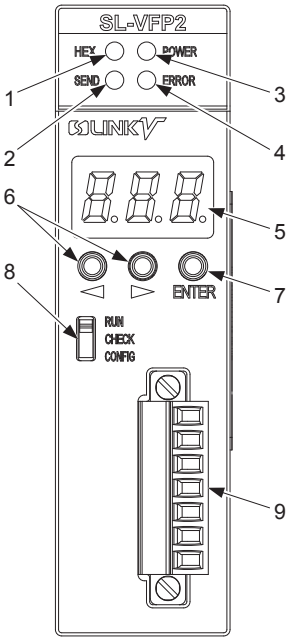

No.	Designation	Function
1	Hexadecimal number display mode indicator (Green)	Indicates the current display mode of the address display. • ON: The hexadecimal number display mode is selected. • OFF: The decimal number display mode is selected.
2	Transmission mode indicator (Green)	This indicator will blink during transmission (when the transmission signal is being output). The indicator blinking cycle depends on the transmission mode.
3	Power indicator (Green)	Lights up when the power is supplied from the PLC to the **SL-VFP2**.
4	Error indicator (Red)	This indicator indicates the error status as follows: • Lights up when an error occurs. • Blinks when the cause of the error is eliminated. • Lights off when operation is normal.
5	Address display (Red)	The displayed item depends on the mode (‘RUN,’ ‘CHECK,’ or ‘CONFIG’ mode). Use the mode selector switch to switch the mode. **<RUN mode>** • Each transmission mode (3 modes in total) will be indicated by the following character, and the LED of each character will sequentially light up just like rotating clockwise. A Mode B Mode C Mode 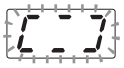 • If an error occurs, the error message will appear. Note: After eliminating the cause of the error, press ENTER key and SELECT keys (2 types of keys) at the same time. The error message will disappear. **<CHECK mode>** • The number of connected nodes will be displayed first. After that, each time you press SELECT key, the recognized addresses will be displayed one after another. Number of connected nodes: Using the decimal or hexadecimal number, the number of I/O units’ nodes will be displayed. Address: Using the decimal or hexadecimal number, the addresses of the I/O units will be displayed sequentially. Note: In the hexadecimal number display mode, the hexadecimal number indicator (green) will light up. • If an error occurs, the number of nodes having the error and the error addresses will be displayed sequentially (for errors 3, 4, and 5). **<CONFIG mode>** • Settings will be displayed sequentially. To switch the displayed setting, use SELECT key. • When the RUN mode is switched to CONFIG mode, different item will be displayed compared with the displayed item just after power-on.
6	SELECT keys	Use these keys to switch the displayed item or set item. Also use these keys to change the set condition value.
7	ENTER key	Press ENTER key to determine the set condition value. In the system setting mode, press and hold ENTER key for 3 seconds or more. The system will be set.
8	Mode selector switch	Switches the mode (RUN, CHECK, or CONFIG mode).
9	**S-LINK V** terminal block connector	7: G 6: D 5: 0V 4: +24V 3: 0V 2: +24V 1: F.G. Receives +24V, 0V, and F.G. from the external power supply unit, and supplies +24V, 0V, D, and G to the I/O units.

● Main specifications

Type		Bus direct-connection type **S-LINK V** controller for **FP2** / **FP2SH** Series
Model No.		**SL-VFP2**
Supply voltage (Note 1)		[**S-LINK V** system side] 24V DC $^{+10}_{-5}$%
		[**FP2** side] 5V DC±5%
Current consumption		[24V DC] 60mA or less (Note 2)
		[5V DC] 150mA or less
Allowable passing current		7A or less (Note 3)
Number of I/O points		32 to 512 points (Set in units of 32 points)
Number of connected nodes		Maximum 256 nodes
Combination of inputs and outputs		Inputs and outputs can be set in units of 32 points.
Indicators	Power supply	Green LED (lights up when 5V DC is supplied from the **FP2** bus side)
	Transmission	Green LED (blinks during transmission)
	Error	Red LED (lights up when an error occurs. Blinks when the error is eliminated. Lights off when operation is nomal.)
	Hexadecimal number	Green LED (lights up when the hexadecimal number display mode is selected to display the addresses)
Address display		3 digit red LED display (displays the number of connected nodes, recognized addresses, error addresses, etc.)
Applicable PLC		**FP2** [manufactured by Panasonic Industrial Devices SUNX Co., Ltd.]
Unit type		**FP2** intelligent units
Number of occupied points		Input: 16 points, Output: 16 points
Environmental resistance	Ambient temperature	0 to +55˚C (No dew condensation), Storage: -20 to +75˚C
	Ambient humidity	5 to 95% RH, Storage: 5 to 95% RH
	Noise immunity	Power line: 500Vp, 10ms cycle, 1μs pulse width Common: 1,000Vp, 10ms cycle, 1μs pulse width (with noise simulator)
	Voltage withstandability	1,000V AC for one min. between all terminals connected together and enclosure
	Insulation resistance	20MΩ, or more, using 500V DC megger between all terminals connected together and enclosure
	Vibration resistance	10 to 150Hz frequency, 0.75mm amplitude or maximum acceleration 9.8m/s^2 in X, Y and Z directions for ten times each
	Shock resistance	147m/s^2 in X, Y, and Z directions for three times each
Grounding method		F.G. terminal: C-connection, Enclosure: Floating
Material		Enclosure: Polycarbonate + PBT alloy, Display part: Polycarbonate
Weight		Approx. 160g
Terminal block		Terminal block connector ECH381RM-07P (manufactured by DINKLE ENTERPRISE CO., LTD.)

Notes: 1) 24V DC and 5V DC are insulated.
2) The current consumption shown in the above table is the current consumption of the controller, but does not include that of the **S-LINK V** I/O units.
3) This product is not equipped with any short-circuit protective function.
For this reason, select a power supply unit having short-circuit protective function (fuse, etc.).

● Terminal layout drawing

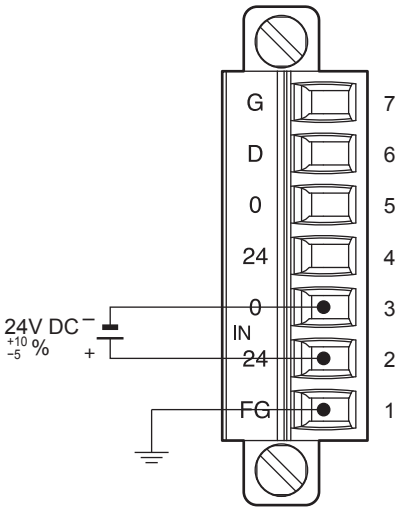

● Dimensions (Unit: mm)

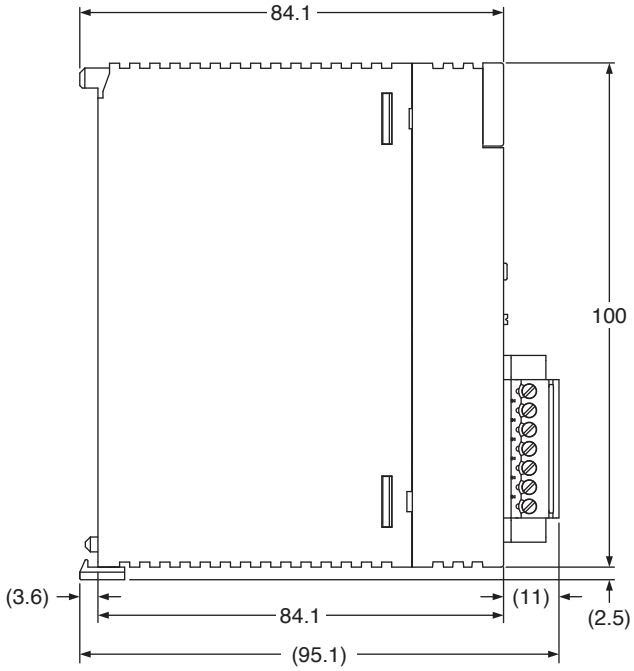

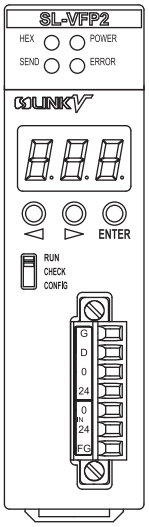

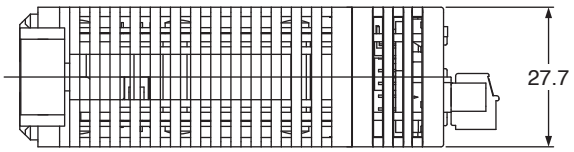

Mitsubishi MELSEC-Q Series PLC bus direct-connection type controller

> NOTE
> For a detailed description of the Mitsubishi MELSEC-Q series PLC bus direct-connection type controller (**SL-VMEL-Q**), refer to the '**Mitsubishi MELSEC-Q series PLC bus direct-connection type controller (SL-VMEL-Q) Instruction Manual**.'

● Part description

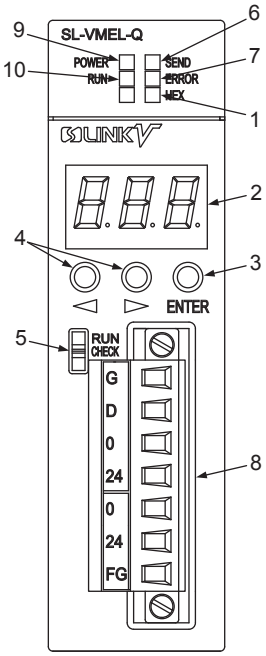

No.	Designation	Function
1	Hexadecimal number display mode indicator (Green)	Indicates the current display mode of the address display. • ON: The hexadecimal number display mode is selected. • OFF: The decimal number display mode is selected.
2	Address display (Red)	The displayed item depends on the mode (‘RUN,’ ‘CHECK,’ or ‘CONFIG’ mode). Use the mode selector switch to switch the mode. **<RUN mode>** • Each transmission mode (3 modes in total) will be indicated by the following character, and the LED of each character will sequentially light up just like rotating clockwise. A Mode 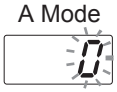 B Mode C Mode 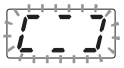 • If an error occurs, the error message will appear. Note: After eliminating the cause of the error, press ENTER key and SELECT keys (2 types of keys) at the same time. The error message will disappear. **<CHECK mode>** • The number of connected nodes will be displayed first. After that, each time you press SELECT key, the recognized addresses will be displayed one after another. Number of connected nodes: Using the decimal or hexadecimal number, the number of I/O units’ nodes will be displayed. Address: Using the decimal or hexadecimal number, the addresses of the I/O units will be displayed sequentially. Note: In the hexadecimal number display mode, the hexadecimal number indicator (green) will light up. • If an error occurs, the number of nodes having the error and the error addresses will be displayed sequentially (for errors 3, 4, and 5). **<CONFIG mode>** • Settings will be displayed sequentially. To switch the displayed setting, use SELECT key. • When the RUN mode is switched to CONFIG mode, different item will be displayed compared with the displayed item just after power-on.
3	ENTER key	Press ENTER key to determine the set condition value. In the system setting mode, press and hold ENTER key for 3 seconds or more. The system will be set.
4	SELECT keys	Use these keys to switch the displayed item or set item. Also use these keys to change the set condition value.
5	Mode selector switch	Switches the mode (RUN, CHECK, or CONFIG mode).
6	Transmission mode indicator (Green)	This indicator will blink during transmission (when the transmission signal is being output). The indicator blinking cycle depends on the transmission mode.
7	Error indicator (Red)	This indicator indicates the error status as follows: • Lights up when an error occurs. • Blinks when the cause of the error is eliminated. • Lights off when operation is normal.
8	**S-LINK V** terminal block connector	7: G 6: D 5: 0V 4: +24V 3: 0V 2: +24V 1: F.G. Receives +24V, 0V, and F.G. from the external power supply unit, and supplies +24V, 0V, D, and G to the I/O units.
9	Power indicator (Green)	Lights up when the power is supplied from the PLC to the **SL-VMEL-Q**.
10	RUN indicator (Green)	Lights up when the **SL-VMEL-Q** is running (Xn0 = ON at the same time). Also lights up when transmission with the CPU unit is started.

● Main specifications

Type		Mitsubishi **MELSEC-Q** Series PLC bus direct-connection type **S-LINK V** controller
Model No.		**SL-VMEL-Q**
Supply voltage (Note 1)		[**S-LINK V** system side] 24V DC $^{+10}_{-5}$%
		[MELSEC-Q side] 5V DC±5%
Current consumption		[24V DC] 70mA or less (Note 2)
		[5V DC] 400mA or less
Allowable passing current		7A or less (Note 3)
Number of I/O points		32 to 512 points (Set in units of 32 points)
Number of connected nodes		Maximum 256 nodes
Combination of inputs and outputs		Inputs and outputs can be set in units of 32 points.
Indicators	Power supply	Green LED (lights up when 5V DC is supplied from the MELSEC-Q bus side)
	RUN	Green LED (lights up when the control circuit operates properly)
	Transmission	Green LED (blinks during transmission)
	Error	Red LED (lights up when an error occurs. Blinks when the error is eliminated. Lights off when operation is nomal.)
	Hexadecimal number	Green LED (lights up when the hexadecimal number display mode is selected to display the addresses)
Address display		3 digit red LED display (displays the number of connected nodes, recognized addresses, error addresses, etc.)
Applicable PLC		MELSEC-Q [manufactured by Mitsubishi Electric Corp.]
Unit type		MELSEC-Q intelligent function unit
Number of occupied points		32 points
Environmental resistance	Ambient temperature	0 to +55˚C (No dew condensation), Storage: -20 to +75˚C
	Ambient humidity	5 to 95% RH, Storage: 5 to 95% RH
	Noise immunity	Power line: 500Vp, 10ms cycle, 1μs pulse width Common: 1,000Vp, 10ms cycle, 1μs pulse width (with noise simulator)
	Voltage withstandability	1,000V AC for one min. between all terminals connected together and enclosure
	Insulation resistance	20MΩ, or more, using 500V DC megger between all terminals connected together and enclosure
	Vibration resistance	10 to 150Hz frequency, 0.75mm amplitude or maximum acceleration 9.8m/s^2 in X, Y and Z directions for ten times each
	Shock resistance	147m/s^2 in X, Y, and Z directions for three times each
Grounding method		F.G. terminal: C-connection, Enclosure: Floating
Material		Enclosure: PC-ABS alloy
Weight		Approx. 160g
Terminal block		Terminal block connector 2ESDVM-07P (manufactured by DINKLE ENTERPRISE CO., LTD.)

Notes: 1) 24V DC and 5V DC are insulated.
2) The current consumption shown in the above table is the current consumption of the controller, but does not include that of the **S-LINK V** I/O units.
3) This product is not equipped with any short-circuit protective function.
For this reason, select a power supply unit having short-circuit protective function (fuse, etc.).

● Terminal layout drawing

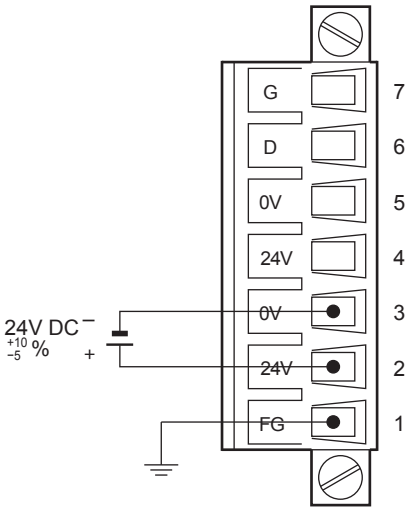

● Dimensions (Unit: mm)

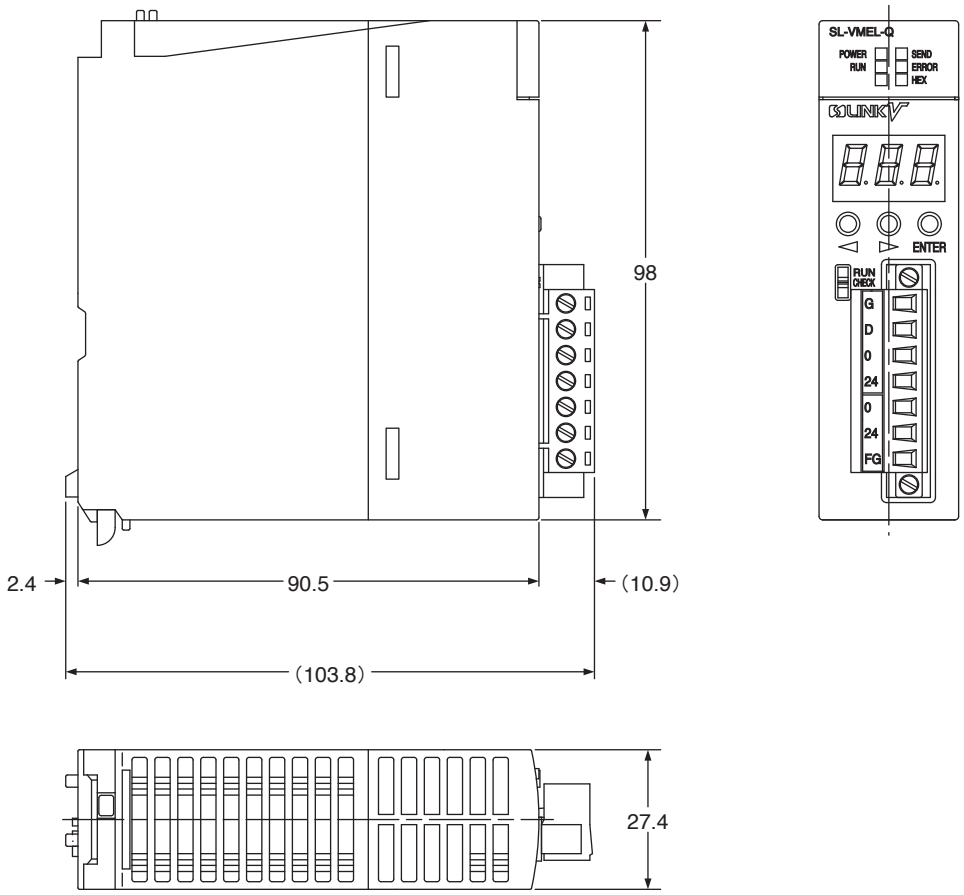

Control board

There are 2 types of control boards: control boards for PCI bus, and VME bus.
Select a control board optimum for your bus.

● Part description

<SL-VPCI>

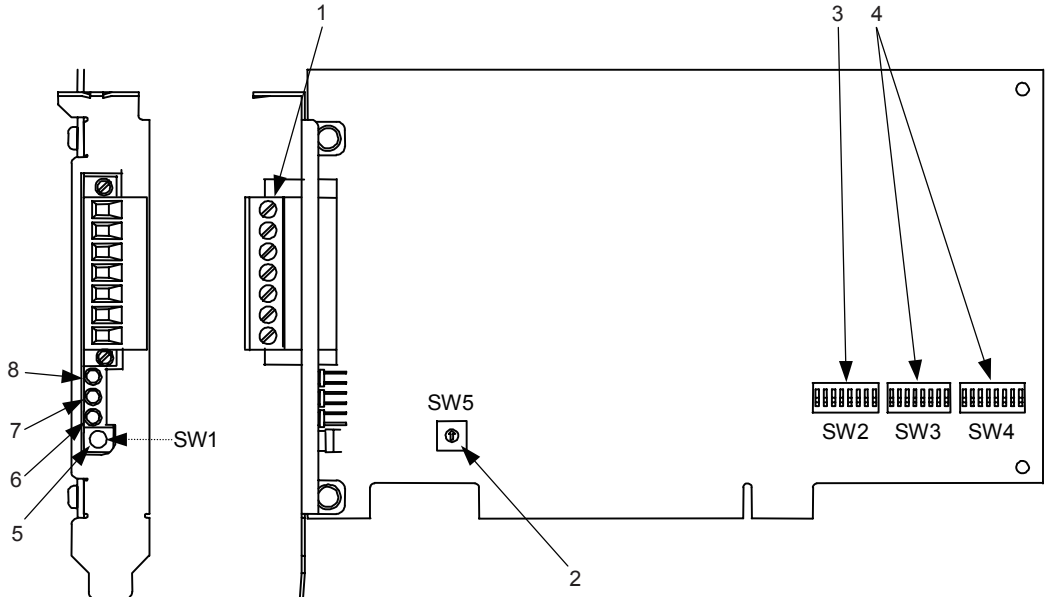

No.	Designation	Function	
1	**S-LINK V** terminal block connector	1: G	Use these connectors to connect the power supply and signal lines of the **S-LINK V** system.
		2: D	
		3: 0V	
		4: +24V	
		5: 0V	
		6: +24V	
		7: F.G.	
2	Board No. setting switches	Use these switches to set the **SL-VPCI** board No. Using the rotary switch, set the range to 0 to F, and you can set up to 16 board Nos. for the same bus.	
3	Transmission mode setting switches I/O control points setting switches	Use the transmission mode setting switches to set the transmission mode to A mode, B mode, or C mode. Use the I/O control points setting switches to set the number of I/O control points. 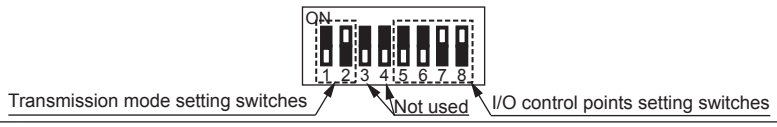 	
4	I/O setting switches	Use these switches to set the I/O (for I/O of every 32 points).	
5	System setting button for port 1	Use this button to read and store the unit connection condition data. After this, the system will use this data to check for errors 3, 4, and 5.	
6	Transmission indicator (Green)	This indicator will blink during transmission (when the transmission signal is being output). The indicator blinking cycle depends on the transmission speed.	
7	BUSY indicator (Orange)	This indicator will light up during system setting operation or transmission check operation.	
8	Error indicator (Red)	This indicator indicates the error status as follows: • Lights up when an error occurs. • Blinks when the cause of the error is eliminated.	

<SL-VVMES2>

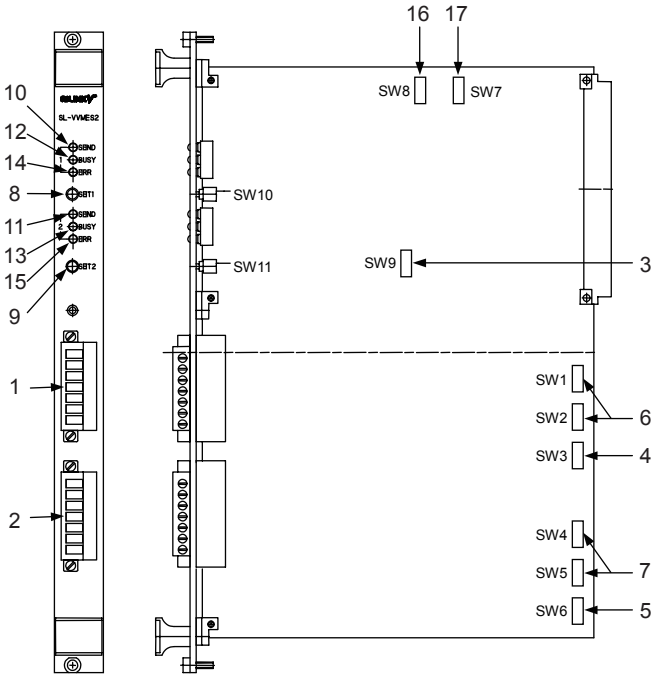

No.	Designation	Function	
1	**S-LINK V** terminal block connector for port 1	7: F.G.	Use these connectors to connect the power supply and signal lines of the **S-LINK V** system.
		6: +24V	
		5: 0V	
		4: +24V	
		3: 0V	
		2: D	
		1: G	
2	**S-LINK V** terminal block connector for port 2	7: F.G.	
		6: +24V	
		5: 0V	
		4: +24V	
		3: 0V	
		2: D	
		1: G	
3	I/O first address setting switches	Use these switches to set two upper digits of the first short address of the VME bus (address consists of 4 digits of hexadecimal numbers).	
4	Transmission mode setting switches for port 1 I/O control points setting switches for port 1	Use the transmission mode setting switches to set the transmission mode to A mode, B mode, or C mode. Use the I/O control points setting switches to set the number of I/O control points. 	
5	Transmission mode setting switches for port 2 I/O control points setting switches for port 2		
6	I/O setting switches for port 1	Use these switches to set the I/O (for I/O of every 32 points).	
7	I/O setting switches for port 2		
8	System setting button for port 1	Use this button to read and store the unit connection condition data. After this, the system will use this data to check for errors 3, 4, and 5.	
9	System setting button for port 2		
10	Transmission indicator for port 1 (Green)	This indicator will blink during transmission (when the transmission signal is being output). The indicator blinking cycle depends on the transmission speed.	
11	Transmission indicator for port 2 (Green)		
12	BUSY indicator for port 1 (Orange)	This indicator will light up during system setting operation or transmission check operation.	
13	BUSY indicator for port 2 (Orange)		
14	Error indicator for port 1 (Red)	This indicator indicates the error status as follows: • Lights up when an error occurs. • Blinks when the cause of the error is eliminated.	
15	Error indicator for port 2 (Red)		
16	Interruption level setting swithces	Use these switches to set the VME bus interruption level (IRQ1 to IRQ7).	
17	Status / ID setting switches	Use these switches to set the status / ID using binary numbers. The status / ID will be transmitted at VME bus interruption.	

● Specifications

Type		For PCI bus	For VME bus
Model No.		**SL-VPCI**	**SL-VVMES2**
Supply voltage (Note 1)		[**S-LINK V** system side] 24V DC $^{+10}_{-5}$%	
		[Bus side] 5V DC±5%	
Current consumption		[24V DC] 85mA or less (Note 2)	[24V DC] 88mA or less (Note 2)
		[24V DC (power supply to load driving **S-LINK V** I/O unit)] Maximum current supplied: 7A (For one port for **SL-VVMES2**) (Note 3)	
		[5V DC] 315mA or less	[5V DC] 880mA or less
Connecting method		'T'-branch connection or multi-drop connection	
Number of I/O control points		Maximum 512 points (Note 4) (using DIP switches, in increments / decrements of 32 points / I/O setting using the program in increments / decrements of 16 points is also possible).	
Indicators	Transmission	Green LED (blinks during transmission)	
	BUSY	Orange LED (Lights up at starting and during system setting operation, turns off during transmission)	
	Error	Red LED (Lights up when an error occurs, blinks when the cause of the error is eliminated, turns off when normal operation is performed.)	
Compatible bus		PCI bus (Note 5)	VME bus
Environmental resistance	Ambient temperature (Note 6)	0 to +55ºC (No dew condensation), Storage: -20 to +70ºC	
	Ambient humidity (Note 6)	20 to 85% RH, Storage: 20 to 85% RH	
	Noise immunity (Note 6)	Power line: 500Vp, 10ms cycle, 1μs pulse width Common: 1,000Vp, 10ms cycle, 1μs pulse width (with noise simulator)	
	Voltage withstandability (Note 6)	1,000V AC for one min. between external terminal and ground	
	Insulation resistance (Note 6)	20MΩ, or more, with 500V DC megger between external terminal and ground	
	Vibration resistance (Note 6)	10 to 150Hz frequency, 0.75mm amplitude or maximum acceleration 49m/s² in X, Y and Z directions for two hours each	
	Shock resistance (Note 6)	98m/s^2 acceleration (approx. 10G) in X, Y and Z directions for three times each	
Grounding method		Bracket: Floating, **S-LINK V** system side: C-connection	
Interruption function (Note 7)		Interruption will be performed if an error or input change occurs (enabling / disabling this function is possible).	Setting of 'Not used,' IRQ1 to IRQ7, and status / ID is possible. [Status / ID transfer capability: D08 (O)] Interruption will be performed if an error or input change occurs (enabling / disabling this function is possible).

Notes: 1) 24V DC and 5V DC are insulated from each other. For the **SL-VVMES2**, the **S-LINK V** transmission ports are also insulated.
2) The current consumption value is the total of the maximum current value (D-G line only) supplied to the **S-LINK V** I/O units and the current consumption value of the **S-LINK V** control board.
3) This product is not equipped with any short-circuit protective function.
For this reason, select a power supply unit having short-circuit protective function (fuse, etc.).
4) For the **SL-VVMES2**, the maximum number of I/O control points is 1,024 points (512 points, maximum ´ 2 ports).
5) If you need a driver, download the driver from "**our Internet homepage: https://panasonic.net/id/pidsx/global** ."
[We can provide drivers for DOS, Windows 95/98/Me(32bit), Windows NT 4.0(32bit), Windows2000/XP/7(32bit) and Windows 10(64bit).] If you cannot access to our Internet homepage, please contact the store where you bought our product or our sales office.
6) This value is for the control board single body. If the control board is installed on the computer, compare the specifications of the control board with those of the computer, and observe the specifications showing the lower value.
7) The interruption function can be enabled or disabled for each point. However, the interruption condition (ON→OFF / OFF→ON) is applied to all the input points, and application to each point is not possible.

● I/O circuit diagram and terminal layout drawing

<Common to all model>

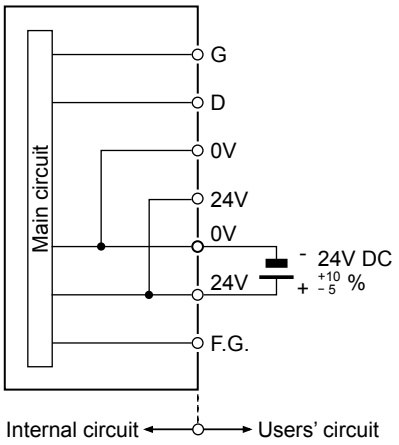

<SL-VPCI>

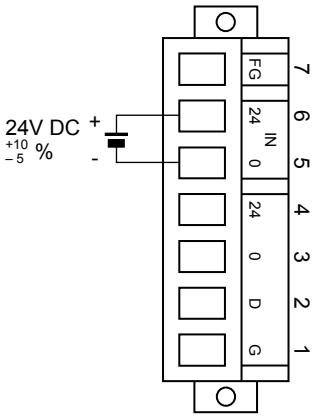

<SL-VVMES2>

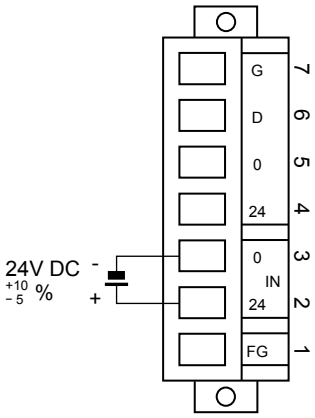

Note: The **SL-VVMES2** is equipped with 2 ports.

● Dimensions (Unit: mm)

<SL-VPCI>

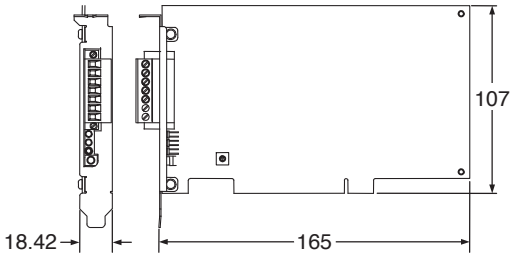

<SL-VVMES2>

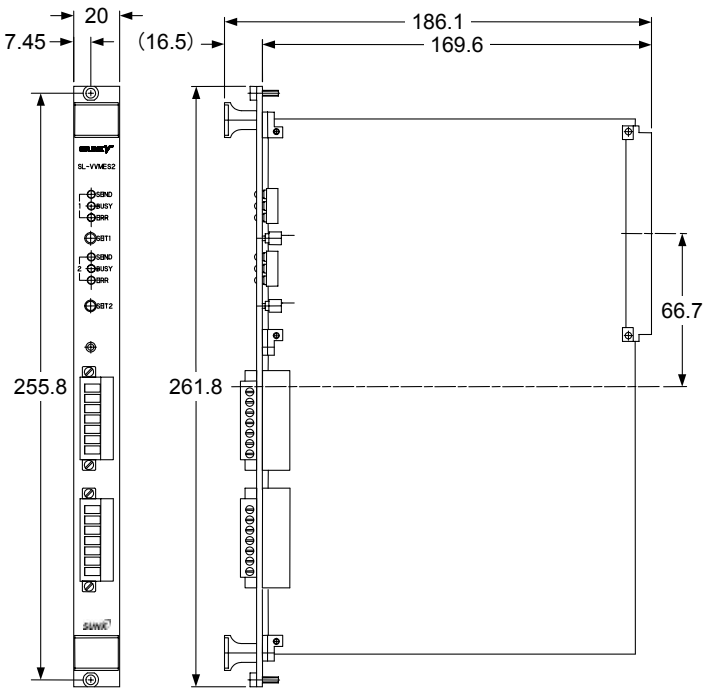

Control module

> NOTE
> For a detailed description of the control module, refer to the '**S-LINK V Control Module (SL-VMC1) Product Specification**.'
> If you need the '**S-LINK V Control Module (SL-VMC1) Product Specification**,' please contact the nearest sales office.

● Specifications

Type		**S-LINK V** control module
Model No.		**SL-VMC1**
Supply voltage (Note 1)		[**S-LINK V** system side] 24V DC $^{+10}_{-5}$%
		[Control module side] 5V DC±5%
Current consumption		[24V DC] 60mA or less (Note 2)
		[5V DC] 200mA or less
Number of I/O points		Maximum 512 points (Using DIP switches, in increments / decrements of 32 points is also possible.)
Specifications for CPU side		Address occupation: 256 bytes (including area not used) from the specified address Address specification: Specified by the CS (chip selection signal) using the external logic Data bus width: 8 bits
Interruption function (Note 3)		When the input is changed, or when an error occurs [Validity (valid or invalid) of interruption can be set.]
Environmental resistance	Ambient temperature (Note 4)	0 to +55ºC (No dew condensation), Storage: -20 to +70ºC
	Ambient humidity (Note 4)	20 to 85% RH, Storage: 20 to 85% RH
	Noise immunity (Note 4)	Power line: 500Vp, 10ms cycle, 1μs pulse width Common: 1,000Vp, 10ms cycle, 1μs pulse width (with noise simulator)
	Voltage withstandability (Note 4)	1,000V AC for one min. between external terminal and ground
	Insulation resistance (Note 4)	20MΩ, or more, with 500V DC megger between external terminal and ground
	Vibration resistance (Note 4)	10 to 150Hz frequency, 0.75mm amplitude or maximum acceleration 49m/s² in X, Y and Z directions for two hours each
	Shock resistance (Note 4)	98m/s^2 acceleration (approx. 10G) in X, Y and Z directions for three times each
Weight		Approx. 20g
Accessories		Parts kit: 1 set (Common mode filter: 1 pc., Diode: 1 pc., Ceramic capacitor (blue): 2 pcs., Surge absorber (black): 1 pc., Poly switch: 2 pcs., Aluminum electrolytic capacitor: 1 pc.)

Notes: 1) 24V DC and 5V DC are insulated.
2) The current consumption value is the total of the maximum current value (D-G line only) supplied to the **S-LINK V** I/O units and the current consumption value of the **S-LINK V** control module.
3) Validity (valid or invalid) of input interruption can be set for every point. The interruption condition (ON→OFF or OFF→ON), however, should be set in units of 32 points. If the input change interruption signal and the error occurrence interruption signal are output at the same time, the priority will be given to the error occurrence interruption signal.
4) Values of control module single body are shown in these areas. To mount this product on your device, these values may be subject to change so that the values can be optimum for both the control module and your device.

● Terminal layout drawing

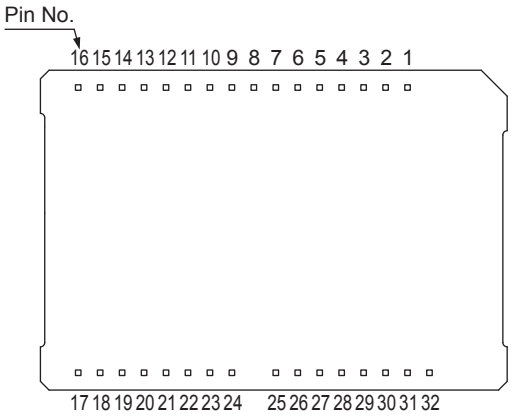

Pin No.	Description	
1	**S-LINK V**-24V	Operation power for **S-LINK V** side
2	N.C.	Not connected
3	D7	Data I/O
4	D6	
5	D5	
6	D4	
7	D3	
8	D2	
9	D1	
10	D0	
11	*RESET	Reset input
12	*RD	Read input
13	*WAT	Wait output
14	*WR	Write input
15	*CS	Chip selection input
16	GND	Grounding terminal for control module side
17	V_{DD}	Operation power for control module side
18	SEND	Transmission indicator output
19	A0	Address input
20	A1	
21	A2	
22	A3	
23	A4	
24	A5	
25	A6	
26	A7	
27	*INT	**S-LINK V** interruption output
28	*READY	**S-LINK V** READY output
29	*24V MON.	**S-LINK V** supply voltage detection output
30	N.C.	Not connected
31	**S-LINK V**-D	D of **S-LINK V** side
32	**S-LINK V**-G	G of **S-LINK V** side and operation power of 0V

● Dimensions (Unit: mm)

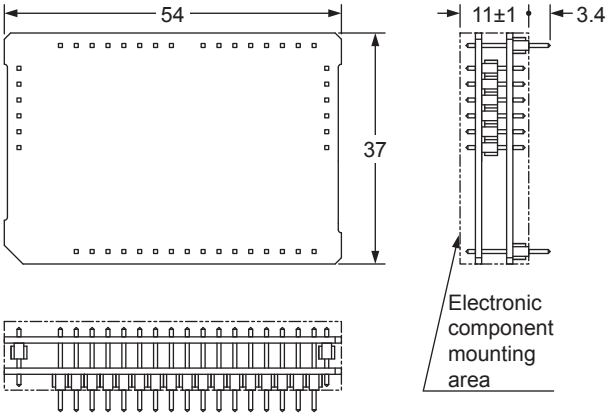

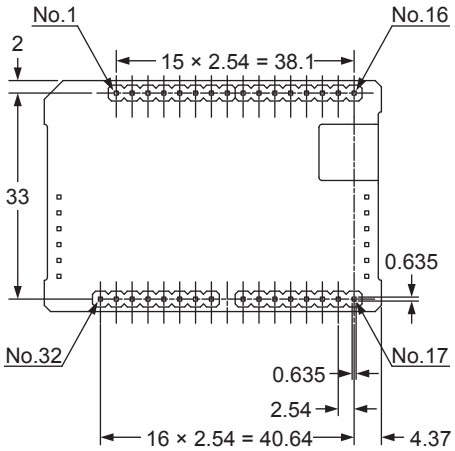

PLC I/O connector

There are 8 types of PLC input connectors and 7 types of PLC output connectors.
Select PLC input and output connectors optimum for your PLC.
(For a detailed description, refer to pages 155 to 156.)

● Part description

<Connector manufactured by Fujitsu Component>

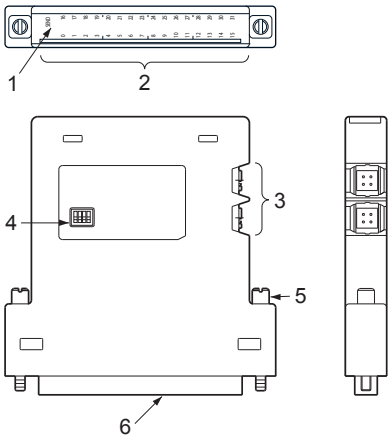

<MIL connector>

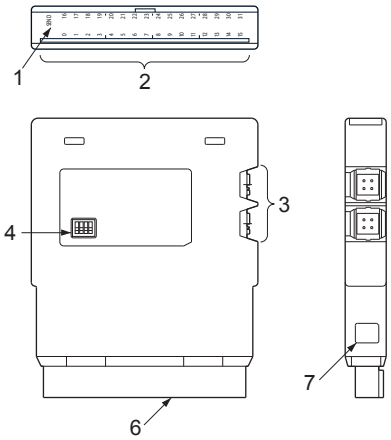

No.	Designation	Function
1	Transmission indicator (Green)	This indicator blinks when the synchronization signal is sent from the controller.
2	Input indicators (Green) (For **SL-VS**□ only)	These indicators will light up when the corresponding signal is input from the controller (32 indicators for indication of 32 points).
	Output indicator (Orange) (For **SL-VP**□ only)	These indicators will light up when the corresponding signal is output to the controller (32 indicators for indication of 32 points).
3	Cascade cable connector	Used for connection of control cable or connector link cable. Control cable: Cable distributed from controller Connector link cable: Cable between PLC I/O connectors
4	Connector number setting switches	Used for setting of the PLC I/O connector number.
5	Mounting screw	Used for fixing the PLC I/O connector to the PLC.
6	PLC I/O module connector	Used for connection to the PLC I/O module.
7	Connector lock lever insertion port	Insert the connector lock lever of the PLC I/O module into this port to fix the main body.

● Specifications

Type		PLC input connector	PLC output connector
Model No.		**SL-VS□**	**SL-VP□**
Supply voltage		24V DC±10% (Supplied from **SL-VCU1**)	
Current consumption		30mA or less (Excluding current supplied to PLC input module)	73mA or less (Excluding current supplied to PLC output module)
Connection		Up to 16 connectors can be connected to each **SL-VCU1** Up to 8 connectors can be connected to each control cable (Use of connector link cable)	
Compatible PLC module		Refer to pages 155 to 156.	
Connector number setting		Using switches, in the range of 0 to 15	
Number of I/O points		Input: 32 points	Output: 32 points
Indicators	Transmission	Green LED (blinks when the synchronization signal is sent from the **SL-VCU1**)	
	Input	Green LED×32	–
	Output	–	Orange LED×32
Environmental resistance	Ambient temperature	0 to +55°C (No dew condensation) (Note), Storage: -20 to +70°C	
	Ambient humidity	10 to 90% RH, Storage: 10 to 90% RH	
	Noise immunity	Power line: 500Vp, 10ms cycle, 1μs pulse width Common: 1,000Vp, 10ms cycle, 1μs pulse width (with noise simulator)	
	Voltage withstandability	1,000V AC for one min. between all terminals connected together and enclosure	
	Insulation resistance	20MΩ, or more, with 500V DC megger between all terminals connected together and enclosure	
	Vibration resistance	10 to 150Hz frequency, 0.75mm amplitude or maximum acceleration 49m/s² in X, Y and Z directions for two hours each	
	Shock resistance	147m/s^2 acceleration (approx. 15G) in X, Y and Z directions for three times each	
Mounting		Connector manufactured by Fujitsu Component Ltd.: Mounting screws MIL connector: Connector with lock function	
Tightening torque		Connector manufactured by Fujitsu Component Ltd.: 0.4N·m	
Material		Enclosure: Polycarbonate	
Weight		Connector manufactured by Fujitsu Ltd.: approx. 45g, MIL connector: approx. 30g	
Accessory		Connector cap: 1 pc.	

Note: If this product is stored in the control panel together with the other units, the temperature may rise above the specified operation temperature due to the heat generated by the other units. In this case, install a cooling fan, etc. so that the ambient temperature can be in the specified range.

● I/O circuit diagram and terminal layout drawing

<PLC input connector>

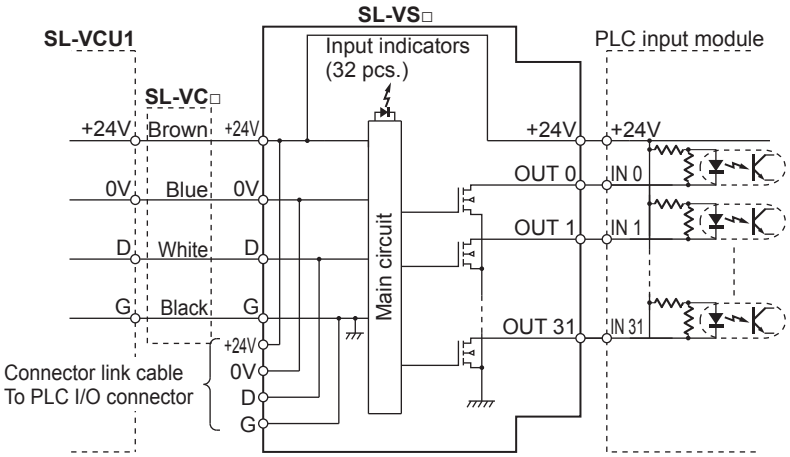

<Connector manufactured by Fujitsu Component>

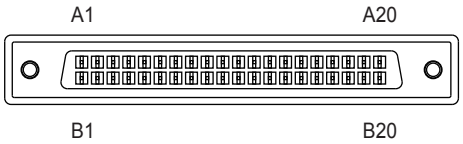

<MIL connector>

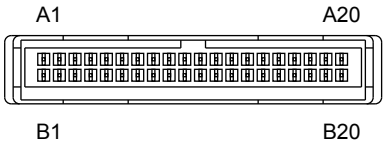

<PLC output connector>

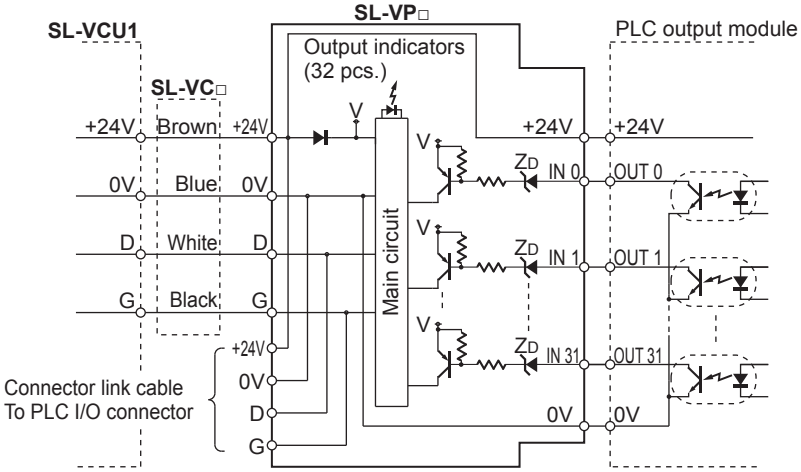

● Dimensions (Unit: mm)

<Connector manufactured by Fujitsu Component>

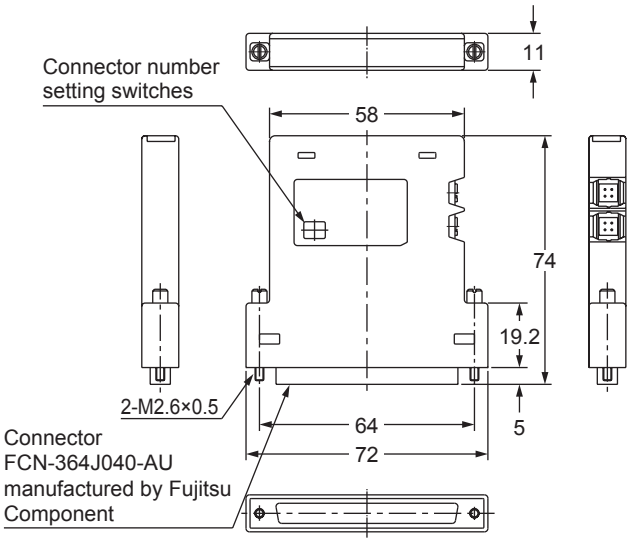

<MIL connector>

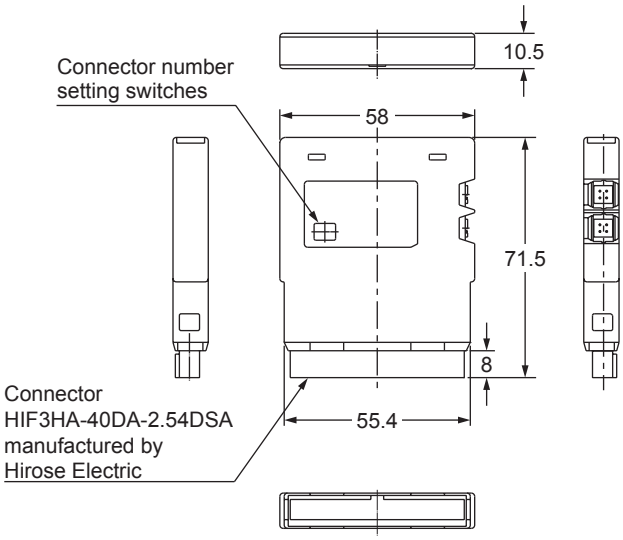

Chapter 4

I/O unit

There are several types of I/O units: 1-channel type, 2-channel type, input type, output type, and I/O mixed type.

● Part description

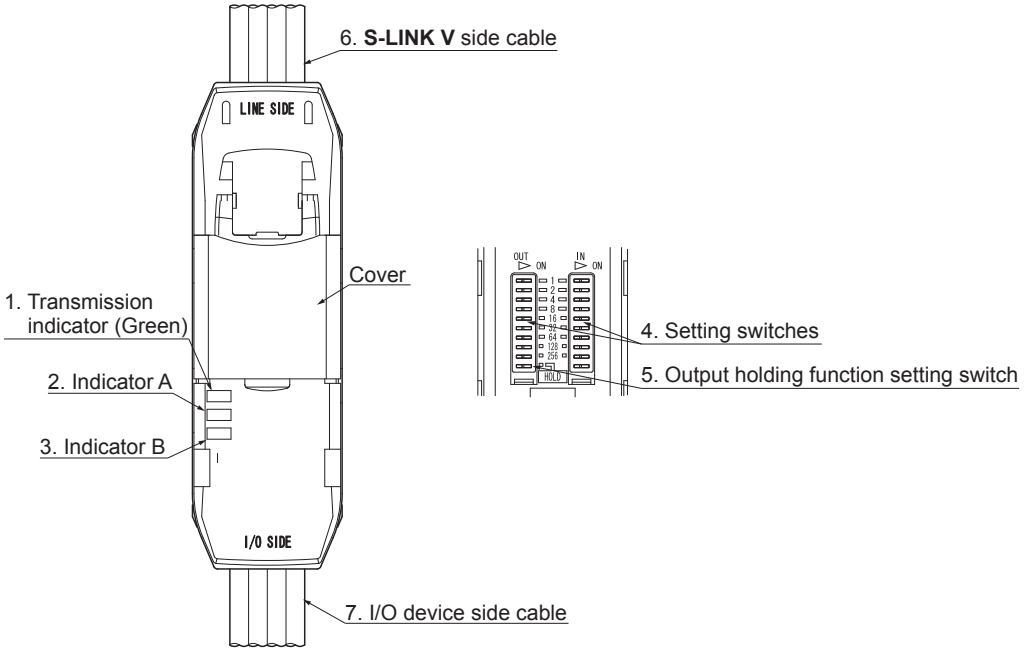

No.	Designation	Function	
1	Transmission indicator (Green)	Blinks when the synchronization signal is sent from the **S-LINK V** controller.	
2	Indicator A	**SL-VCH10**	Input indicator (Green): Lights up when the input is turned ON.
		SL-VCH11	Output indicator (Orange): Lights up when the output is turned ON.
		SL-VCH20	Input 1 indicator (Green): Lights up when the input 1 is turned ON.
		SL-VCH21	Input indicator (Green): Lights up when the input is turned ON.
		SL-VCH22	Output 1 indicator (Orange): Lights up when the output 1 is turned ON.
3	Indicator B	**SL-VCH10**	—
		SL-VCH11	—
		SL-VCH20	Input 2 indicator (Green): Lights up when the input 2 is turned ON.
		SL-VCH21	Output indicator (Orange): Lights up when the output is turned ON.
		SL-VCH22	Output 2 indicator (Orange): Lights up when the output 2 is turned ON.
4	Address setting switches	Used for setting of the I/O unit address.	
5	Output holding function setting switch (For **SL-VCH11**, **SL-VCH22**, and **SL-VCH21** only)	Used for setting of the output holding function. ON: After detection of a transmission signal error, the current output conditions will be held (output holding). OFF: After detection of a transmission signal error, the current output conditions will not be held (output OFF).	
6	**S-LINK V** side cable	Brown: +24V, Blue: 0V, White: D, Black: G	
7	I/O device side cable	**SL-VCH10**, **SL-VCH20**	Brown: +24V, Blue: 0V, Black: Input 1, Black / Gray: Input 2 (Note 1)
		SL-VCH11, **SL-VCH22**	Brown: +24V, Blue: 0V, Pink: Output 1, Pink / Gray: Output 2 (Note 2)
		SL-VCH21	Brown: +24V, Blue: 0V, Black: Input, Pink: Output

Notes: 1) The **SL-VCH10** will not use input 2 (black / gray).
2) The **SL-VCH11** will not use output 2 (pink / gray).

● Specifications

Type		Input unit		I/O mixed unit	Output unit	
		1-channel type	2-channel type	2-channel type	1-channel type	2-channel type
Model No.		**SL-VCH10**	**SL-VCH20**	**SL-VCH21**	**SL-VCH11**	**SL-VCH22**
Supply voltage		24V DC±10% (Supplied from **S-LINK V** controller or separate power supply)				
Current consumption		20mA or less (When input is ON, including current input)	28mA or less (When 2 points of inputs are ON, including current input)	24mA or less (When input is ON, including current input. When output is ON)	16mA or less (When output is ON)	20mA or less (When 2 points of outputs are ON.)
Allowable passing current		Total: 0.5A or less				
Address setting		Using switches, in the range of 0 to 511				
Input		Photo-coupler input • Current input: 9mA or less • Operation voltage: ON voltage: 17V or more (between +24V and input) OFF voltage: 4V or less (between +24V and input) • Input impedance: Approx. 3.4kΩ			——	
Output		——		NPN open-collector transistor (photo-isolation) • Maximum sink current: 100mA • Applied voltage: 30V DC or less (between output and 0V) • Residual voltage: 1.5V or less (at 100mA sink current) 0.4V or less (at 16mA sink current)		
	Output operation	——		The output transistor will be turned on if the output signal is sent from the signal transmission line.		
	Short-circuit protection	——		——		
Number of I/O points		Input: 1 point	Input: 2 points	Input: 1point / Output: 1 point	Output 1 point	Output 2 points
Indicators	Transmission	Green LED (blinks when the synchronization signal is sent from the **S-LINK V** controller)				
	Input	Green LED (lights up when the input is turned ON)			——	
	Output	——		Orange LED (lights up when the output is turned ON)		
Output holding		——		Incorporated		
Environmental resistance	Ambient temperature	-10 to +55°C (No dew condensation or icing allowed) (Note), Storage: -20 to +70°C				
	Ambient humidity	35 to 85% RH, Storage: 35 to 85% RH				
	Noise immunity	Power line: 500Vp, 10ms cycle, 1μs pulse width Common: 1,000Vp, 10ms cycle, 1μs pulse width (with noise simulator)				
	Voltage withstandability	1,000V AC for one min. between all terminals connected together and enclosure				
	Insulation resistance	20MΩ, or more, with 500V DC megger between all terminals connected together and enclosure				
	Vibration resistance	10 to 150Hz frequency, 0.75mm amplitude or maximum acceleration 49m/s² in X, Y and Z directions for two hours each				
	Shock resistance	490m/s^2 acceleration (approx. 50G) in X, Y and Z directions for three times each				
Material		Enclosure: Polycarbonate				
Cable		**S-LINK V** side: 0.5mm^2 4-core flat cable, 0.6m long I/O device side: 0.5mm^2 4-core flat cable, 0.4m long				
Weight		Approx. 55g				

Note: If this product is stored in the control panel together with the other units, the temperature may rise above the specified operation temperature due to the heat generated by the other units. In this case, install a cooling fan, etc. so that the ambient temperature can be in the specified range.

● I/O circuit diagram

<Input unit>

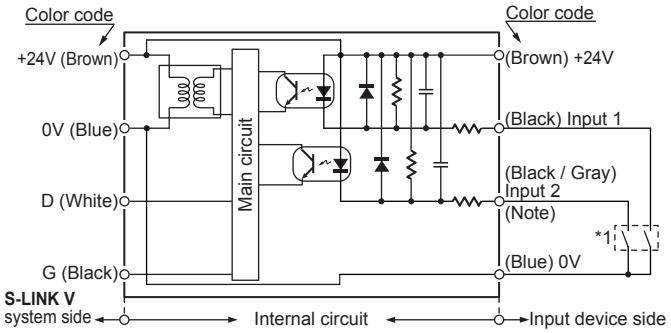

Note: The **SL-VCH10** will not use input 2 (black / gray).

<Output unit>

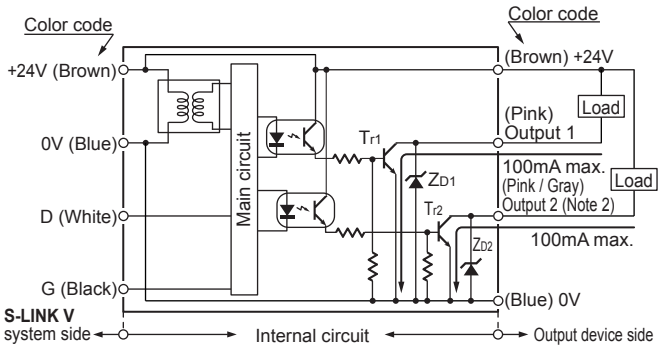

Note: The **SL-VCH11** will not use output 2 (pink / gray).

<I/O mixed unit>

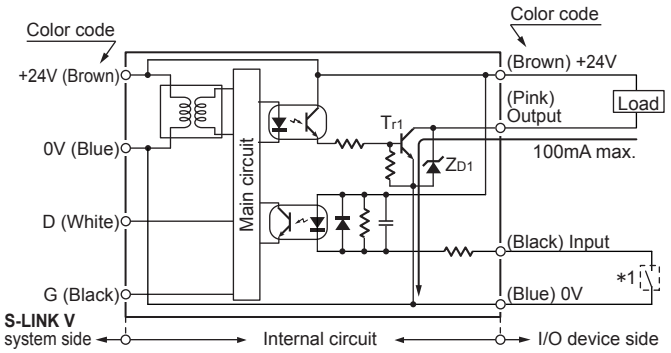

***1**

Non-voltage contact, NPN open-collector transistor or DC 2-wire output
- Current input: 9mA or less
- Operation voltage:
  ON voltage: 17V or more (between +24V and input)
  OFF voltage: 4V or less (between +24V and input)
- Input impedance: Approx. 3.4kΩ

Symbols… Z_{D1}, Z_{D2}: Surge absorption zener diode
T_{r1}, T_{r2} : NPN output transistor

● Dimensions (Unit: mm)

<SL-VCH□>

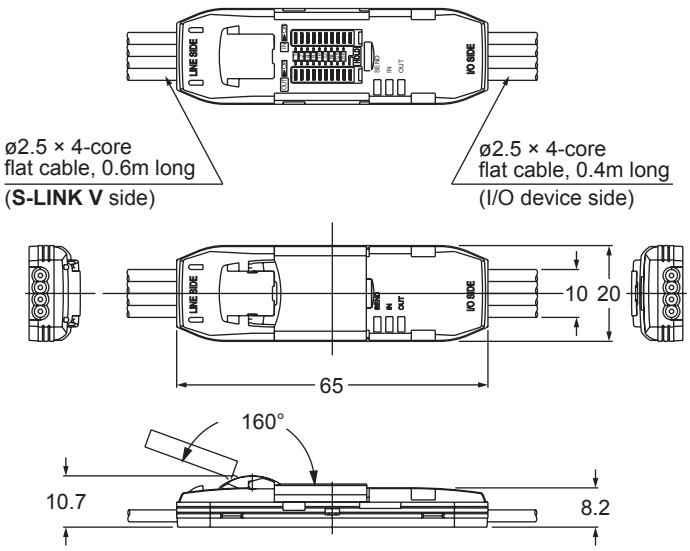

<MS-CH / DIN rail mounting holder>

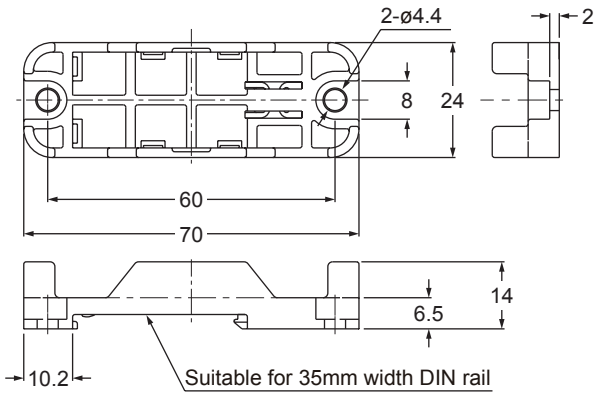

Input terminal

(**SL-VTB4**: 4-channel / **SL-VTB8**: 8-channel / **SL-VTB16**: 16-channel / **SL-VTB32**: 32-channel)

● Part description

<SL-VTB4>

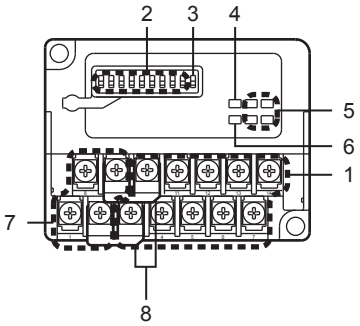

<SL-VTB8>

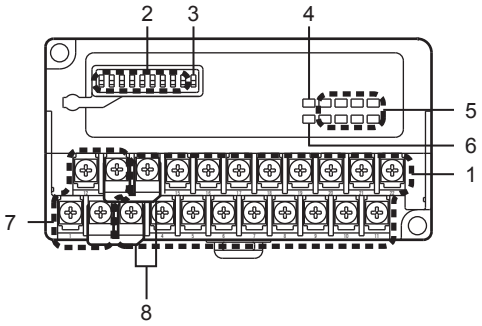

<SL-VTB16>

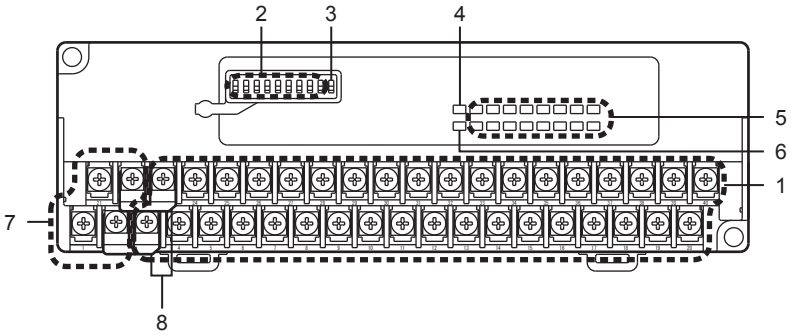

<SL-VTB32>

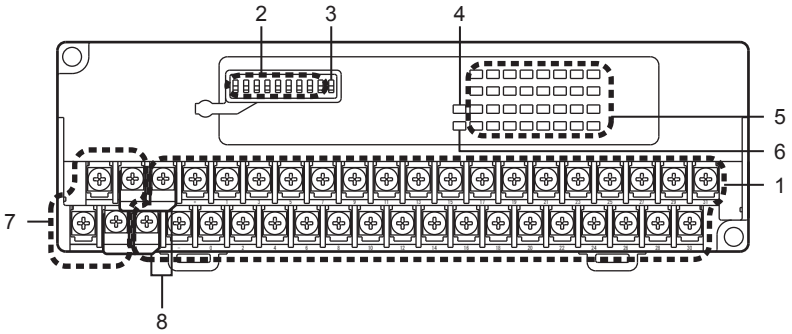

No.	Designation	Function
1	Input terminals	Used for connection of the input device.
2	Address setting switches	Used for setting of terminal address.
3	Not Used	Not used. (Setting to the OFF status is recommended.)
4	Power indicator (Green)	This indicator will light up when the power is supplied.
5	Input indicators (Green)	Each indicator will light up when the input signal of the corresponding channel is turned ON.
6	Transmission indicator (Green)	This indicator will blink when the synchronization signal is sent from the **S-LINK V** controller.
7	Transmission cable connection terminals	Used for connection of the **S-LINK V** system transmission cable. To connect the local power supply unit, connect the cable to the +24V and 0V terminals.
8	Shorting piece	Used for shorting the line between +24V and '+' or between 0V and '-.' Remove this piece to use different power supply units for the input device and the input terminal respectively.

● Specifications

Type		4-channel	8-channel	16-channel	32-channel
Model No.		**SL-VTB4**	**SL-VTB8**	**SL-VTB16**	**SL-VTB32**
Supply voltage		24V DC±10% (Supplied from **S-LINK V** controller or separate power supply)			
Current consumption (Note 1)	Unit side	25mA or less	30mA or less	35mA or less	45mA or less
	Input side	45mA or less (When all points are ON, including current input)	75mA or less (When all points are ON, including current input)	150mA or less (When all points are ON, including current input)	300mA or less (When all points are ON, including current input)
Allowable passing current (Note 2)		Total: 1A or less	Total: 2A or less	Total: 4A or less	Total: 7A or less
Address setting		Using switches, in the range of 0 to 511			
Input		Photo-coupler input: • Current input: 9mA or less • Operation voltage: ON voltage: 17V or more (between +24V and input) OFF voltage: 4V or less (between +24V and input) • Input impedance: Approx. 3.3kΩ			
Number of input points		4 points	8 points	16 points	32 points
Indicators	Power supply	Green LED (lights up when there is power between the “24V DC” power supply terminal and “0V”, and between “+” and “-“)			
	Transmission	Green LED (blinks when the synchronization signal is sent from the **S-LINK V** controller)			
	Input	Green LED (lights up when the input signal of the corresponding channel is turned ON)			
Environmental resistance	Ambient temperature	-10 to +55°C (No dew condensation or icing allowed) (Note 3), Storage: -20 to +70°C			
	Ambient humidity	35 to 85% RH, Storage: 35 to 85% RH			
	Noise immunity	Power line: 500Vp, 10ms cycle, 1μs pulse width Common: 1,000Vp, 10ms cycle, 1μs pulse width (with noise simulator)			
	Voltage withstandability	1,000V AC for one min. between all terminals connected together and enclosure			
	Insulation resistance	20MΩ, or more, with 500V DC megger between all terminals connected together and enclosure			
	Vibration resistance	10 to 150Hz frequency, 0.75mm amplitude or maximum acceleration 49m/s² in X, Y and Z directions for two hours each			
	Shock resistance	490m/s^2 acceleration (approx. 50G) in X, Y and Z directions for three times each			
Mounting		Installed on DIN rail or by tightening screws			
Tightening torque		Terminal screw: 0.5N•m or less, Mounting screw: 1.2N•m or less			
Material		Enclosure: ABS, Terminal area: PBT			
Weight		Approx. 90g	Approx.130g	Approx. 220g	Approx. 225g

Notes: 1) The current consumption value shown in the ‘Unit side’ area indicates the current consumption in the main circuit.
2) Each value includes the current consumption of this terminal and connected machine.
3) If this product is stored in the control panel together with the other units, the temperature may rise above the specified operation temperature due to the heat generated by the other units.
In this case, install a cooling fan, etc. so that the ambient temperature can be in the specified range.

● Input circuit diagram and terminal layout drawing

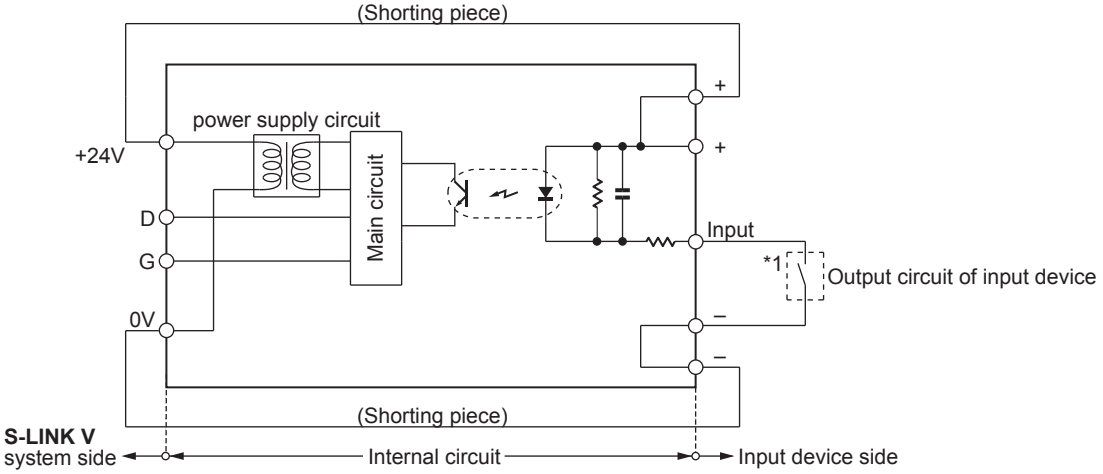

Notes: 1) A shorting piece is used for connection of +24V to '+' or 0V to '–.'
2) Remove the shorting piece to use different power supply units for the input device and the input terminal respectively.

***1**

Non-voltage contact, NPN open-collector transistor or DC 2-wire output
- Current input: 9mA or less
- Operation voltage:
  ON voltage: 17V or more [between input and +24V]
  OFF voltage: 4V or less [between input and +24V]
- Input impedance: Approx. 3.3kΩ

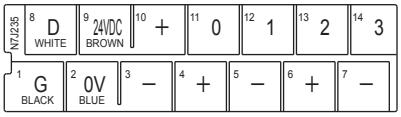

SL-VTB4 terminal nameplate

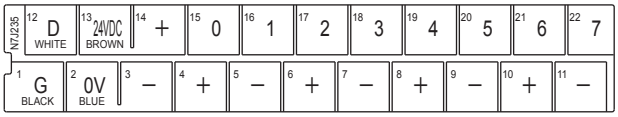

SL-VTB8 terminal nameplate

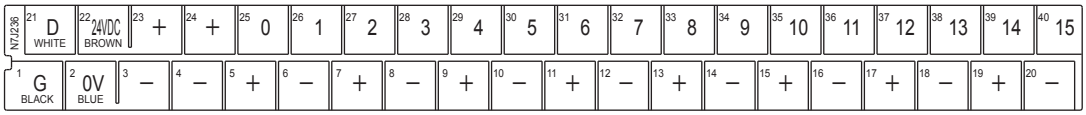

SL-VTB16 terminal nameplate

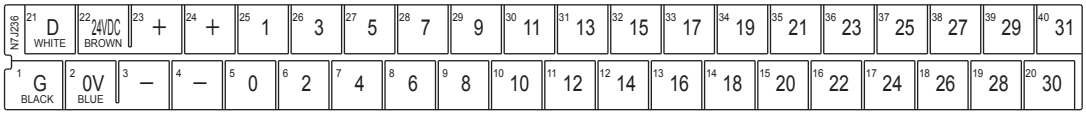

SL-VTB32 terminal nameplate

● Dimensions (Unit: mm)

<SL-VTB4>

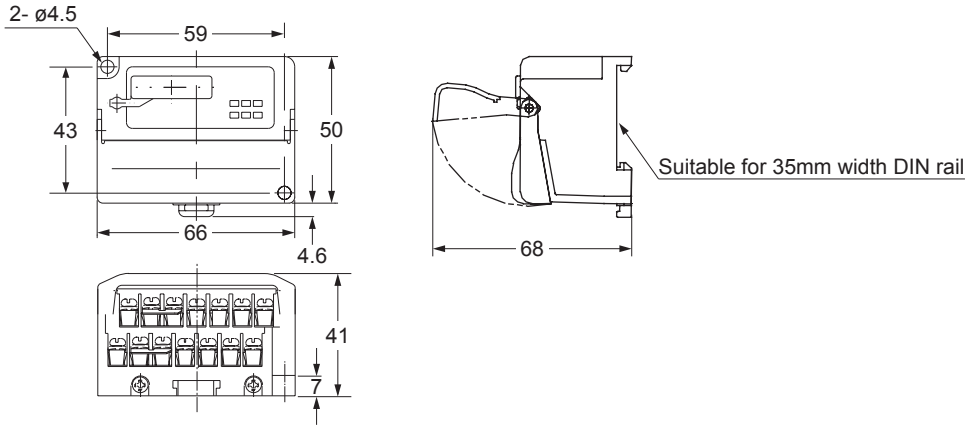

<SL-VTB8>

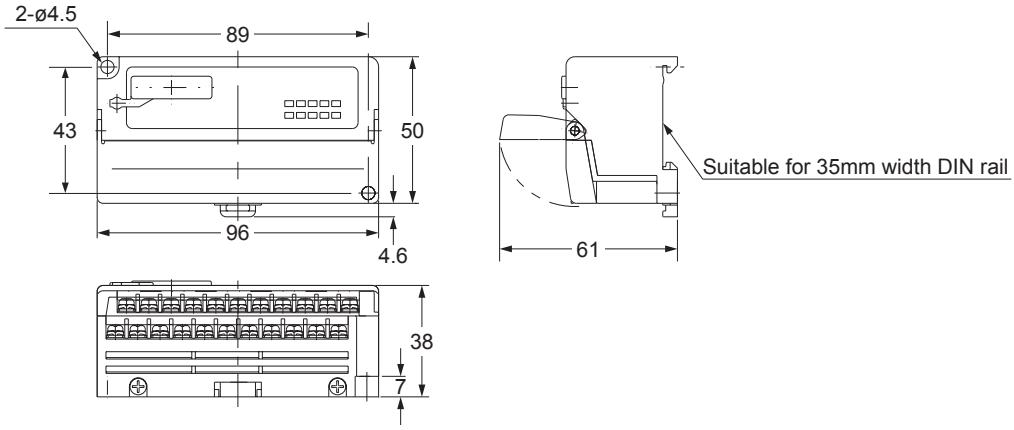

<SL-VTB16, SL-VTB32>

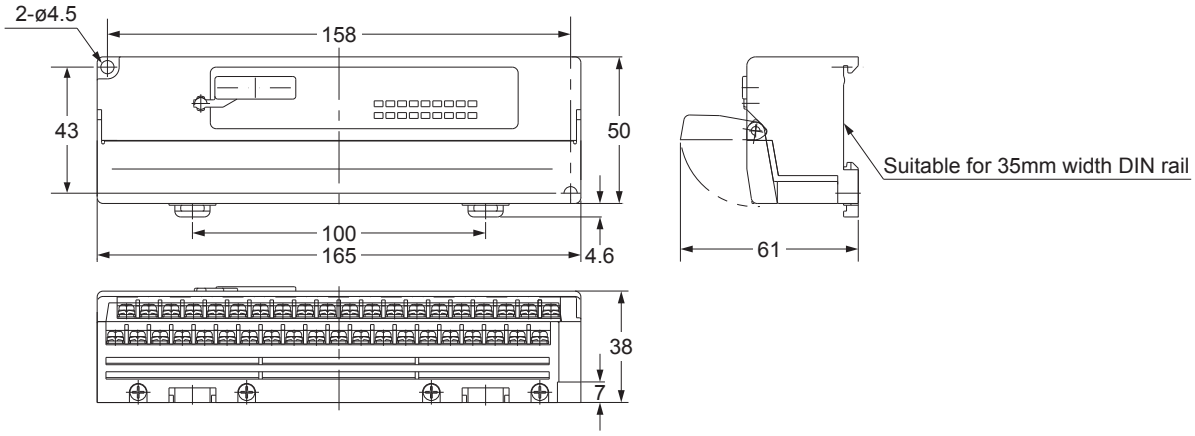

Note: **SL-VTB32** has a different number of input indicators (green). For a detailed description, refer to page 99.

Output terminal

(**SL-VTBP4**: 4-channel / **SL-VTBP8**: 8-channel / **SL-VTBP16**: 16-channel **SL-VTBP32**: 32-channel)

● Part description

<SL-VTBP4>

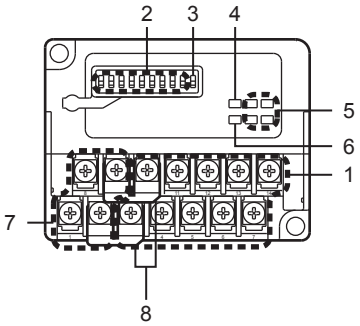

<SL-VTBP8>

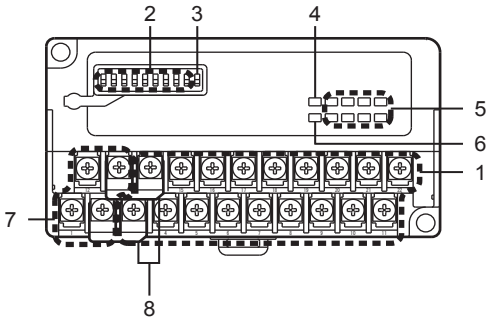

<SL-VTBP16>

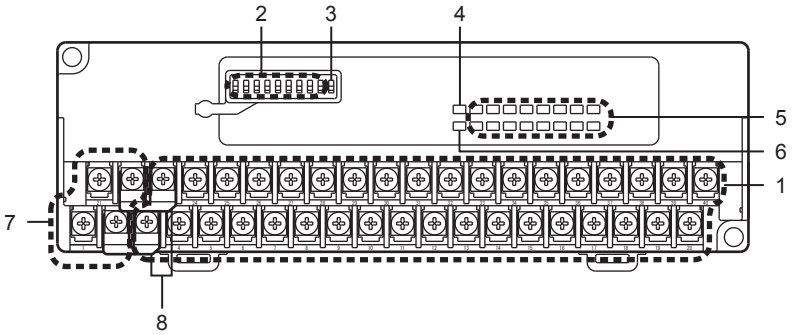

<SL-VTBP32>

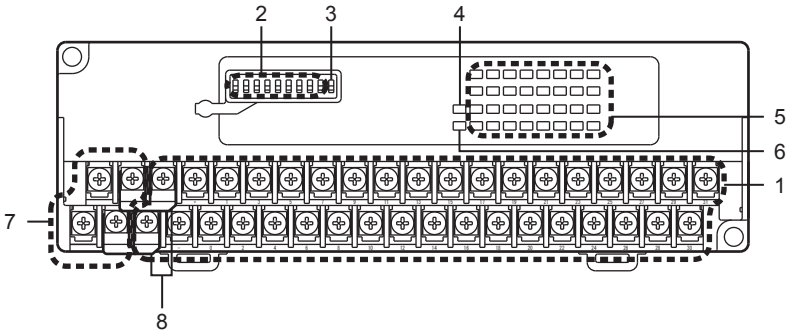

No.	Designation	Function
1	Output terminal	Used for connection of the output device.
2	Address setting switches	Used for setting of terminal address.
3	Output holding function setting switch	Used for setting of the output holding function. ON: Holds the current output conditions (output holding). OFF: Will not hold the current output conditions (output OFF).
4	Power indicator (Green)	This indicator will light up when the power is supplied.
5	Output indicators (Orange)	Each indicator will light up when the output signal of the corresponding channel is turned ON.
6	Transmission indicator (Green)	This indicator will blink when the synchronization signal is sent from the **S-LINK V** controller.
7	Transmission cable connection terminals	Used for connection of the **S-LINK V** system transmission cable. To connect the local power supply unit, connect the cable to the +24V and 0V terminals.
8	Shorting piece	Used for shorting the line between +24V and '+' or between 0V and '-.' Remove this piece to use different power supply units for the output device and the output terminal respectively.

● Specifications

Type		4-channel	8-channel	16-channel	32-channel
Mode No.		**SL-VTBP4**	**SL-VTBP8**	**SL-VTBP16**	**SL-VTBP32**
Supply voltage		24V DC±10% (Supplied from **S-LINK V** controller or separate power supply)			
Current consumption (Note 1)	Unit side	25mA or less	30mA or less	40mA or less	45mA or less
	Output side	40mA or less (When all points are ON)	60mA or less (When all points are ON)	100mA or less (When all points are ON)	180mA or less (When all points are ON)
Allowable passing current (Note 2)		Total: 1A or less	Total: 2A or less	Total: 4A or less	Total: 7A or less
Address setting		Using switches, in the range of 0 to 511			
Output		NPN open-collector transistor (photo-isolation) • Masimum sink current: 200mA • Applied voltage: 30V DC or less (between output and 0V) • Residual voltage: 1.5V or less (at 200mA sink current) 0.4V or less (at 16mA sink current)			
	Output operation	The output transistor will be turned on if the output signal is sent from the signal transmission line.			
	Short-circuit protection	Incorporated (Note 3)			
Number of output points		4 points	8 points	16 points	32 points
Indicators	Power	Green LED (lights up when there is power between the “24V DC” power supply terminal and “0V”, and between “+” and “-“)			
	Transmission	Green LED (blinks when the synchronization signal is sent from the **S-LINK V** controller)			
	Output	Orange LED (lights up when the output signal of the corresponding channel is turned ON)			
Output holding function		Incorporated			
Environmental resistance	Ambient temperature	-10 to +55°C (No dew condensation or icing allowed) (Note 4), Storage: -20 to +70°C			
	Ambient humidity	35 to 85% RH, Storage: 35 to 85% RH			
	Noise immunity	Power line: 500Vp, 10ms cycle, 1μs pulse width Common: 1,000Vp, 10ms cycle, 1μs pulse width (with noise simulator)			
	Voltage withstandability	1,000V AC for one min. between all terminals connected together and enclosure			
	Insulation resistance	20MΩ, or more, with 500V DC megger between all terminals connected together and enclosure			
	Vibration resistance	10 to 150Hz frequency, 0.75mm amplitude or maximum acceleration 49m/s² in X, Y and Z directions for two hours each			
	Shock resistance	490m/s^2 acceleration (approx. 50G) in X, Y and Z directions for three times each			
Mounting		Mounted on DIN rail or by tightening screws			
Tightening torque		Terminal screw: 0.5N•m or less, Mounting screw: 1.2N•m or less			
Material		Enclosure: ABS, Terminal area: PBT			
Weight		Approx. 90g	Approx. 130g	Approx. 220g	Approx. 225g

Notes: 1) The current consumption value shown in the ‘Unit side’ area indicates the current consumption in the main circuit.
The current consumption value shown in the ‘output side’ area indicates the current consumption in the output circuit.
2) Each value includes the current consumption of this terminal and connected machine.
3) If one of the output channels is shorted, the short-circuit protective function will be activated to protect all the channels, and outputting signals to the external machine will be stopped. Eliminate the cause of the problem, and the system will be automatically restored.
4) If this product is stored in the control panel together with the other units, the temperature may rise above the specified operation temperature due to the heat generated by the other units.
In this case, install a cooling fan, etc. so that the ambient temperature can be in the specified range.

● Output circuit diagram and terminal layout drawing

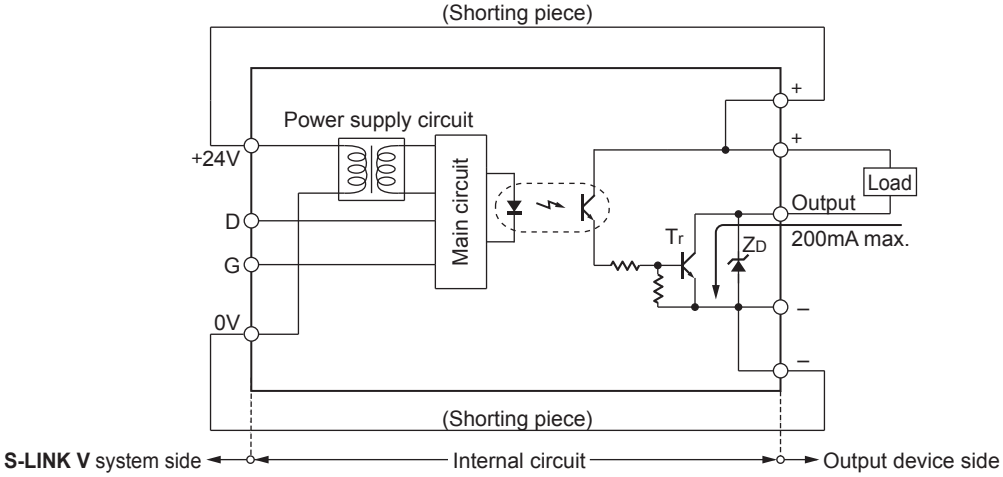

Notes: 1) A shorting piece is used for connection of +24V to '+' or 0V to '–.'
2) Remove the shorting piece to use different power supply units for the output device and the output terminal respectively.

Symbols… Z_D: Surge absorption zener diode
T_r : NPN output transistor

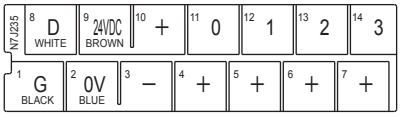

SL-VTBP4 model nameplate

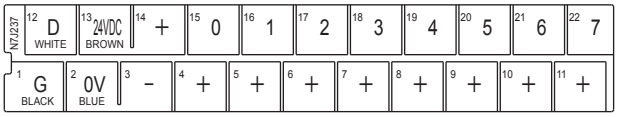

SL-VTBP8 model nameplate

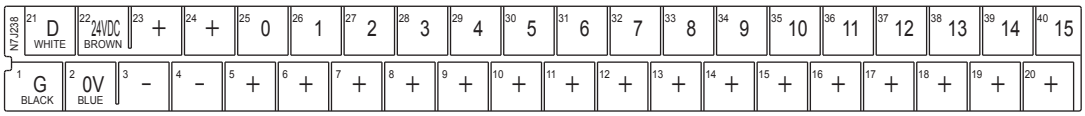

SL-VTBP16 model nameplate

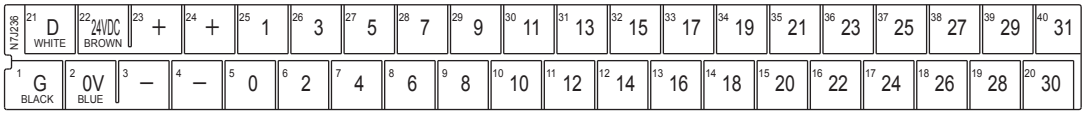

SL-VTBP32 model nameplate

● Dimensions (Unit: mm)

<SL-VTBP4>

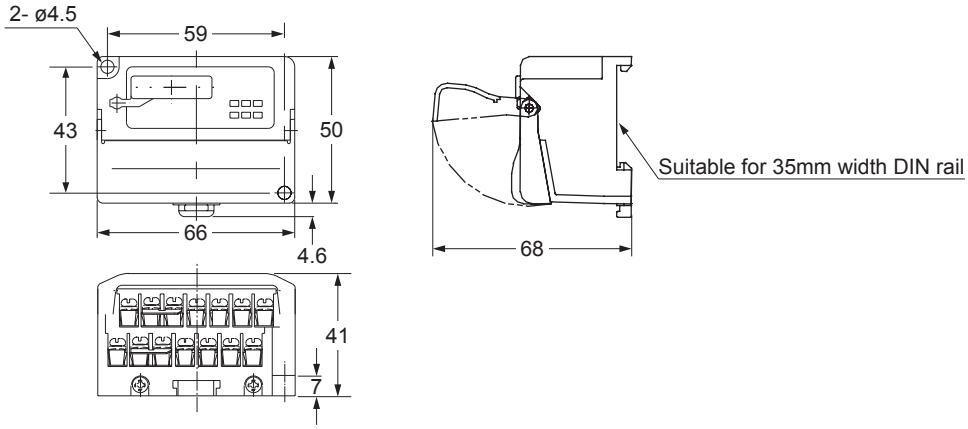

<SL-VTBP8>

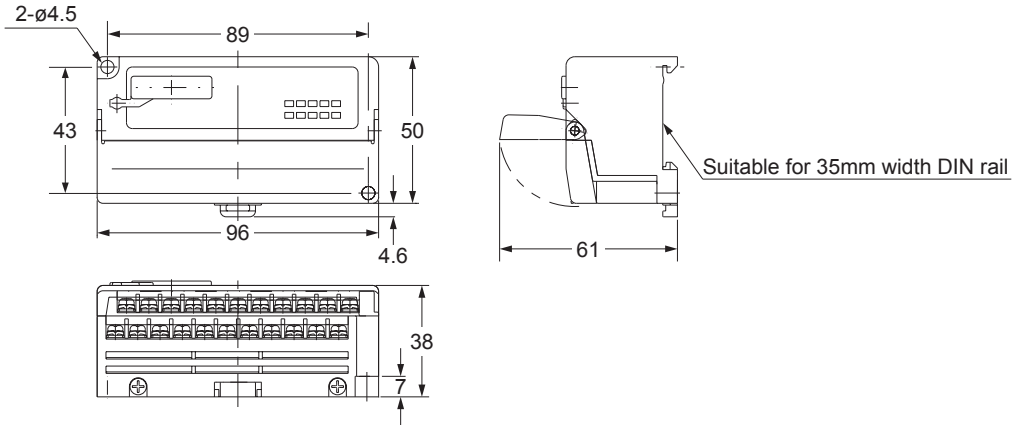

<SL-VTBP16, SL-VTBP32>

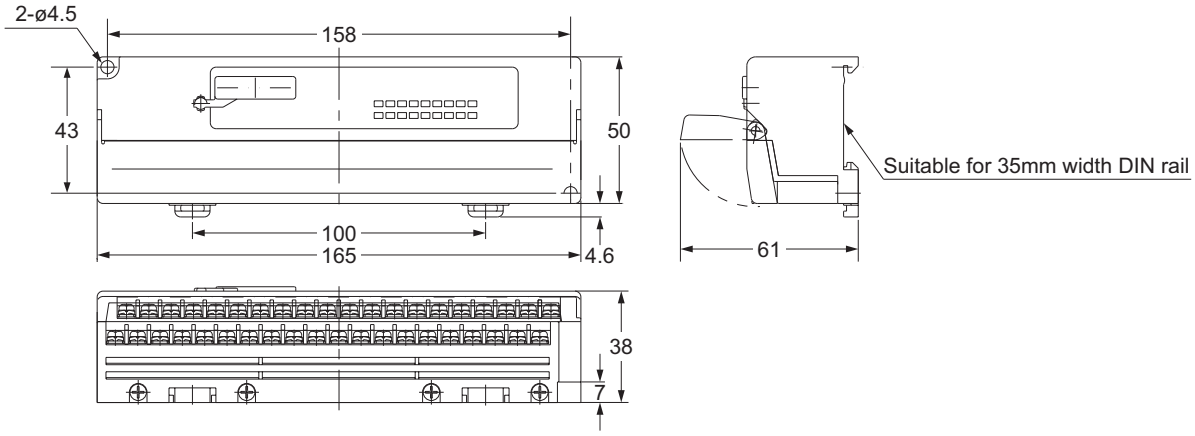

Note: **SL-VTBP32** has a different number of output indicators (orange). For a detailed description, refer to page 103.

Connector input unit

(**SL-VT4J / VT4E**: 4-channel, **SL-VT8J / VT8E**: 8-channel)

● Part description

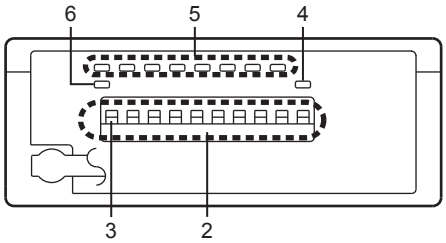

<SL-VT4J>

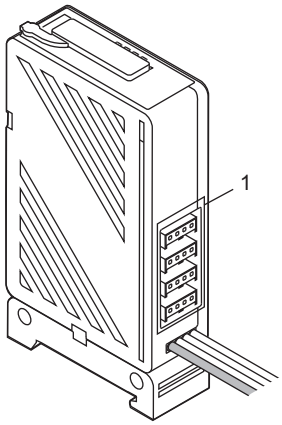

<SL-VT4E>

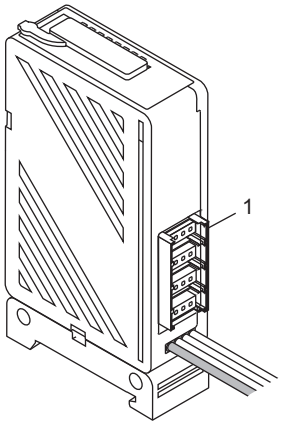

<SL-VT8J>

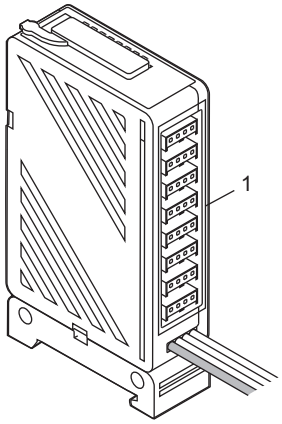

<SL-VT8E>

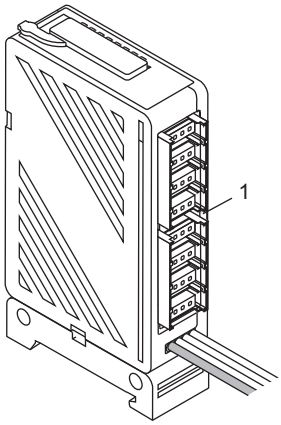

No.	Designation	Function
1	Input device connector	Used for connection of the input device.
2	Address setting switches	Used for setting of terminal address.
3	Not Used	Not used. (Setting to the OFF status is recommended.)
4	Power indicator (Green)	This indicator will light up when the power is supplied.
5	Input indicators (Green)	Each indicator will light up when the input signal of the corresponding channel is turned ON.
6	Transmission indicator (Green)	This indicator will blink when the synchronization signal is sent from the **S-LINK V** controller.

● Specifications

Type		4-channel		8-channel	
		Connector type	e-CON connector type	Connector type	e-CON connector type
Model No.		**SL-VT4J**	**SL-VT4E**	**SL-VT8J**	**SL-VT8E**
Applicable connector		Snap male connector **SL-CP1**, **SL-CP2**, **SL-CP3**	e-CON conforming connector	Snap male connector **SL-CP1**, **SL-CP2**, **SL-CP3**	e-CON conforming connector
Supply voltage		24V DC±10% (Supplied from **S-LINK V** controller or separate power supply)			
Current consumption		70mA or less (When all points are ON, including current input)		105mA or less (When all points are ON, including current input)	
Allowable passing current (Note 1)		Total: 2A or less			
Address setting		Using switches, in the range of 0 to 511			
Input		Photo-coupler input: • Current input: 9mA or less • Operation voltage: ON voltage: 17V or more (between input and +24V) OFF voltage: 4V or less (between input and +24V) • Input impedance: Approx. 3.3kΩ			
Number of input points		4 points		8 points	
Indicators	Power	Green LED (lights up when the power is supplied)			
	Transmission	Green LED (blinks when the synchronization signal is sent from the **S-LINK V** controller)			
	Input	Green LED (lights up when the input signal of the corresponding channel is turned ON)			
Environmental resistance	Ambient temperature (Note 2) (Note 3)	-10 to +55ºC (No dew condensation or icing allowed), Storage: -20 to +70ºC			
	Ambient humidity	35 to 85% RH, Storage: 35 to 85% RH			
	Noise immunity	Power line: 500Vp, 10ms cycle, 1μs pulse width Common: 1,000Vp, 10ms cycle, 1μs pulse width (with noise simulator)			
	Voltage withstandability	1,000V AC for one min. between all terminals connected together and enclosure			
	Insulation resistance	20MΩ, or more, with 500V DC megger between all terminals connected together and enclosure			
	Vibration resistance	10 to 150Hz frequency, 0.75mm amplitude or maximum acceleration 49m/s² in X, Y and Z directions for two hours each			
	Shock resistance	490m/s^2 acceleration (approx. 50G) in X, Y and Z directions for three times each			
Mounting		Mounted on DIN rail or by tightening screws			
Tightening torque		Mounting screw: 0.8N·m or less			
Material		Enclosure: ABS, Installation base: POM			
Cable		0.5mm^2 4-core flat cable, 0.6m long			
Weight		Approx. 75g		Approx. 80g	
Accessory		Connector I/O unit mounting base: 1 pc.			

Notes: 1) Each value includes the current consumption of this unit and connected machine.
2) If this product is stored in the control panel together with the other units, the temperature may rise above the specified operation temperature due to the heat generated by the other units.
In this case, install a cooling fan, etc. so that the ambient temperature can be in the specified range.
3) In some cases, you cannot install the same connector input units close to each other, or connector input units and other I/O units close to each other. The distance between these units depends on the ambient temperature.
While referring to the following figure, secure enough distance between the units.

<To horizontally install the units>

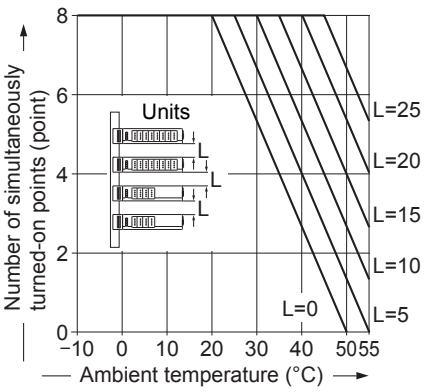

<To vertically install the units>

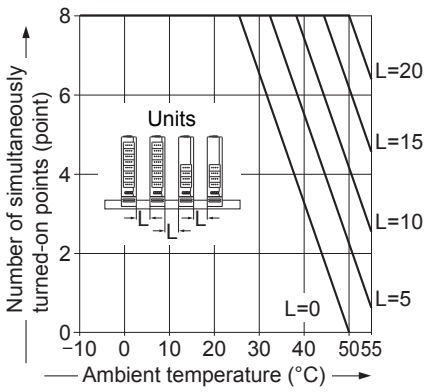

● Input circuit diagram and terminal layout drawing

<SL-VT□J>

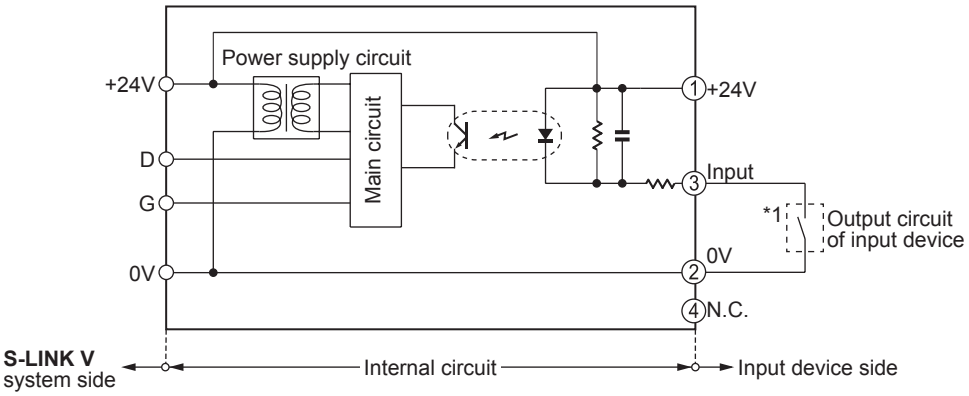

***1**

Non-voltage contact, NPN open-collector transistor or DC 2-wire output
- Current input: 9mA or less
- Operation voltage:
  ON voltage: 17V or more [between input and +24V]
  OFF voltage: 4V or less [between input and +24V]
- Input impedance: Approx. 3.3kΩ

<SL-VT□E>

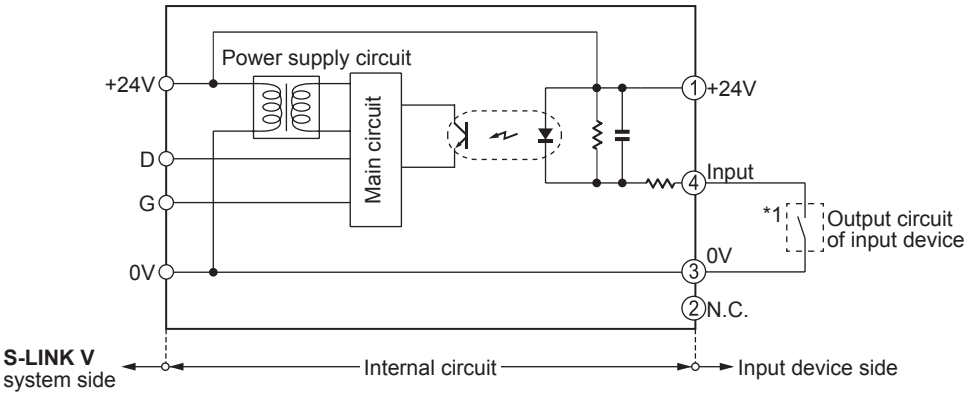

***1**

Non-voltage contact, NPN open-collector transistor or DC 2-wire output
- Current input: 9mA or less
- Operation voltage:
  ON voltage: 17V or more [between input and +24V]
  OFF voltage: 4V or less [between input and +24V]
- Input impedance: Approx. 3.3kΩ

<SL-VT□J>

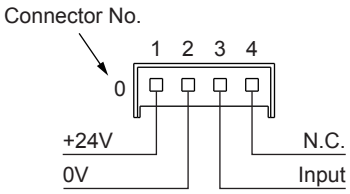

<SL-VT□E>

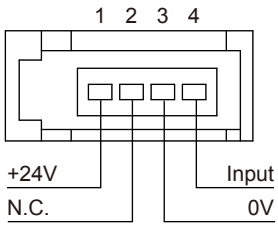

● Dimensions (Unit: mm)

<SL-VT4J>

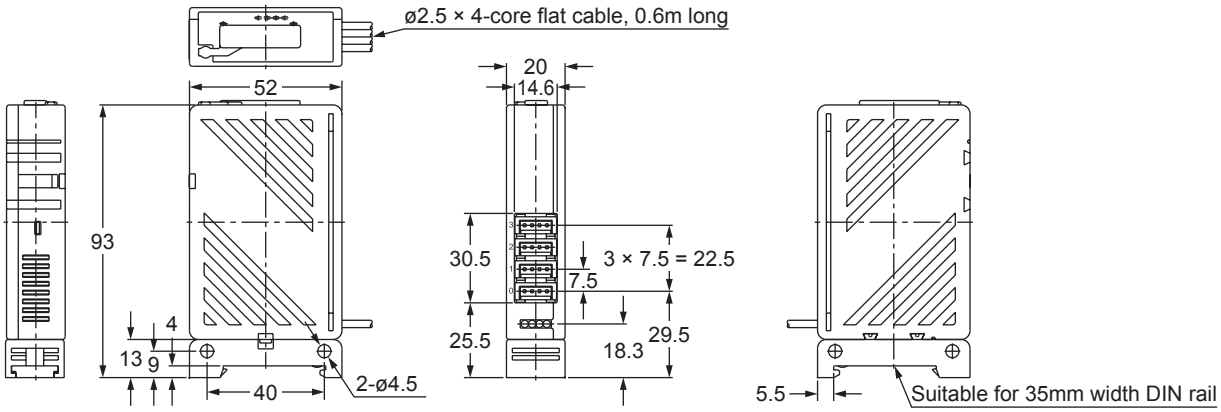

<SL-VT4E>

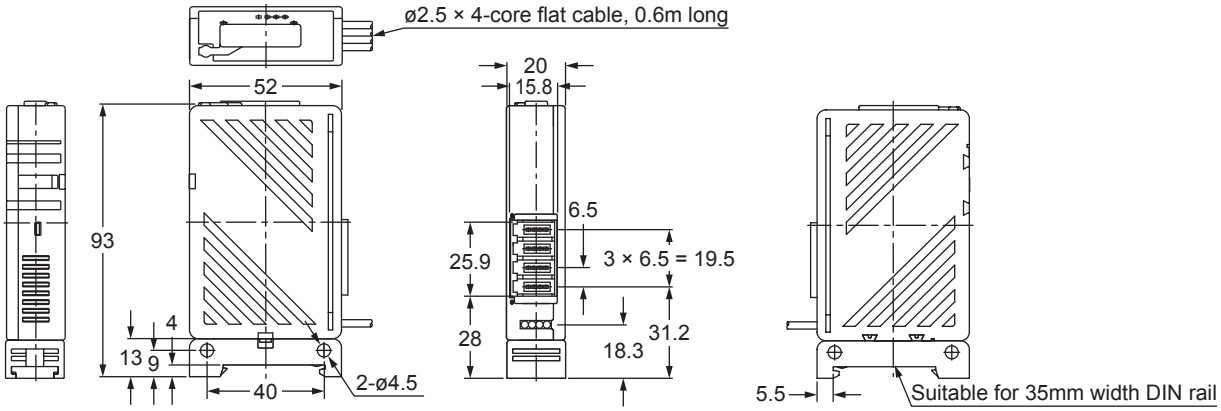

<SL-VT8J>

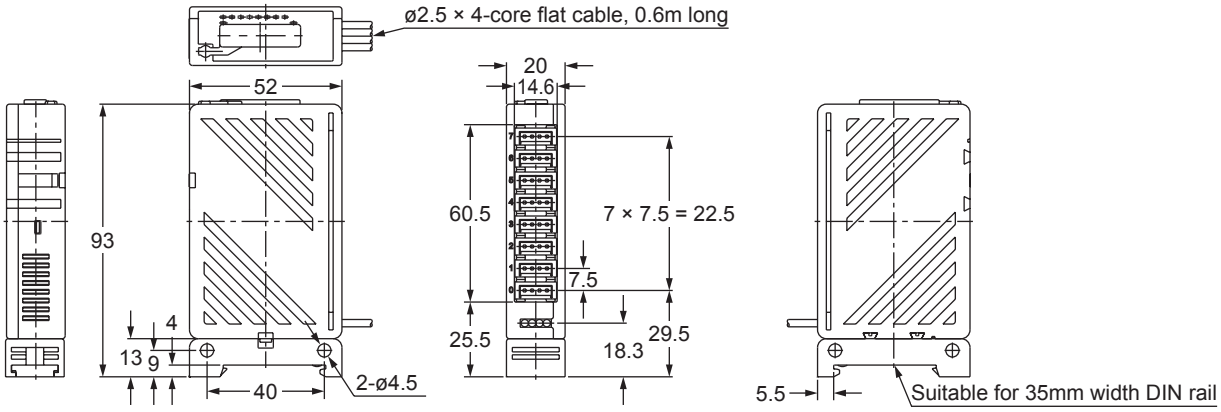

<SL-VT8E>

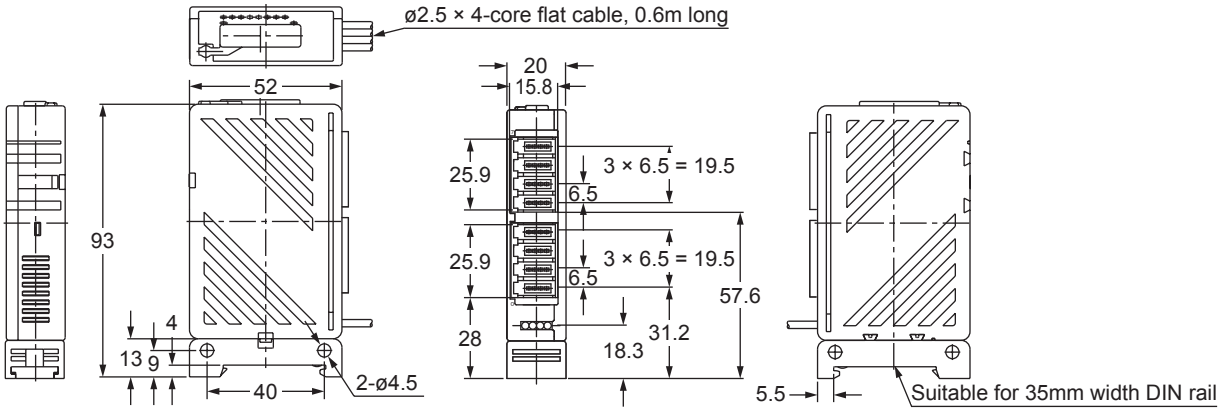

Connector output unit

(**SL-VTP4J** / **VTP4E**: 4-channel, **SL-VTP8J** / **VTP8E**: 8-channel)

● Part description

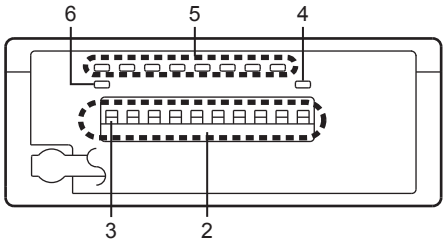

<SL-VTP4J>

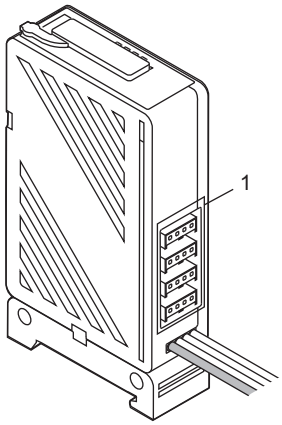

<SL-VTP4E>

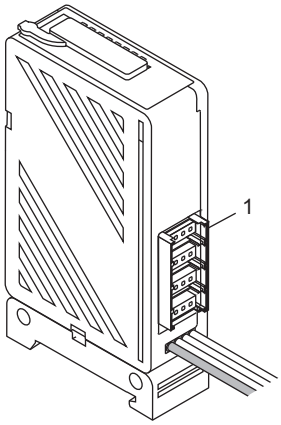

<SL-VTP8J>

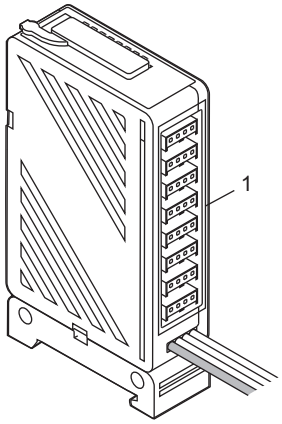

<SL-VTP8E>

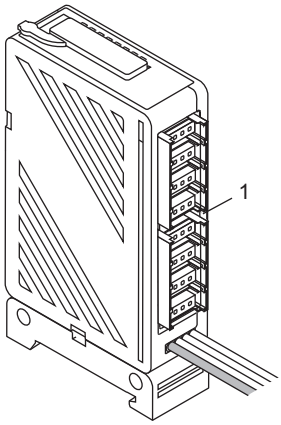

No.	Designation	Function
1	Output device connector	Used for connection of the output device.
2	Address setting switches	Used for setting of address.
3	Output holding function setting switch	Used for setting of the output holding function. ON: Holds the current output conditions (output holding). OFF: Will not hold the current output conditions (output OFF).
4	Power indicator (Green)	This indicator will light up when the power is supplied.
5	Output indicators (Orange)	Each indicator will light up when the output signal of the corresponding channel is turned ON.
6	Transmission indicator (Green)	This indicator will blink when the synchronization signal is sent from the **S-LINK V** controller.

● Specifications

Type		4-channel		8-channel	
		Connector type	e-CON connector type	Connector type	e-CON connector type
Model No.		**SL-VTP4J**	**SL-VTP4E**	**SL-VTP8J**	**SL-VTP8E**
Applicable connector		Snap male connector **SL-CP1**, **SL-CP2**, **SL-CP3**	e-CON conforming connector	Snap male connector **SL-CP1**, **SL-CP2**, **SL-CP3**	e-CON conforming connector
Supply voltage		24V DC±10% (Supplied from **S-LINK V** controller or separate power supply)			
Current consumption		60mA or less (when all points are ON)		90mA or less (when all points are ON)	
Allowable passing current (Note)		Total: 2A or less			
Address setting		Using switches, in the range of 0 to 511			
Output		NPN open-collector transistor (photo-isolation) • Maximum sink current: 200mA • Applied voltage: 30V DC or less (between output and 0V) • Residual voltage: 1.5V or less (at 200mA sink current) 0.4V or less (at 16mA sink current)			
	Output operation	The output transistor will be turned on if the output signal is sent from the signal transmission line.			
	Short-circuit protection	Incorporated (Note 2)			
Number of output points		4 points		8 points	
Indicators	Power	Green LED (lights up when the power is supplied)			
	Transmission	Green LED (blinks when the synchronization signal is sent from the **S-LINK V** controller)			
	Output	Orange LED (lights up when the output signal of the corresponding channel is turned ON)			
Output holding function		Incorporated			
Environmental resistance	Ambient temperature (Note 3, 4)	-10 to +55ºC (No dew condensation or icing allowed), Storage: -20 to +70ºC			
	Ambient humidity	35 to 85% RH, Storage: 35 to 85% RH			
	Noise immunity	Power line: 500Vp, 10ms cycle, 1μs pulse width Common: 1,000Vp, 10ms cycle, 1μs pulse width (with noise simulator)			
	Voltage withstandability	1,000V AC for one min. between all terminals connected together and enclosure			
	Insulation resistance	20MΩ, or more, with 500V DC megger between all terminals connected together and enclosure			
	Vibration resistance	10 to 150Hz frequency, 0.75mm amplitude or maximum acceleration 49m/s² in X, Y and Z directions for two hours each			
	Shock resistance	490m/s^2 acceleration (Approx. 50G) in X, Y and Z directions for three times each			
Mounting		Mounted on DIN rail or by tightening screws			
Tightening torque		Mounting screw: 0.8N·m or less			
Material		Enclosure: ABS, Installation base: POM			
Cable		0.5mm^2 4-core flat cable, 0.6m long			
Weight		Approx. 75g		Approx. 80g	
Accessory		Connector I/O unit mounting base: 1 pc.			

Notes: 1) Each value includes the current consumption of this unit and connected machine.
2) If one of the output channels is shorted, the short-circuit protective function will be activated to protect all the channels, and outputting signals to the external machine will be stopped. Eliminate the cause of the problem, and the system will be automatically restored.
3) If this product is stored in the control panel together with the other units, the temperature may rise above the specified operation temperature due to the heat generated by the other units.
In this case, install a cooling fan, etc. so that the ambient temperature can be in the specified range.
4) In some cases, you cannot install the same connector output units close to each other, or connector output units and other I/O units close to each other. The distance between these units depends on the ambient temperature.
While referring to the following figure, secure enough distance between the units.

<To horizontally install the units>

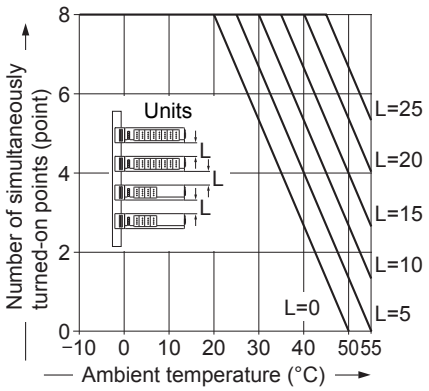

<To vertically install the units>

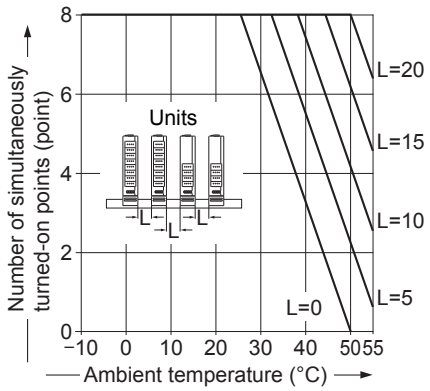

● Output circuit diagram and terminal layout drawing

<SL-VTP□J>

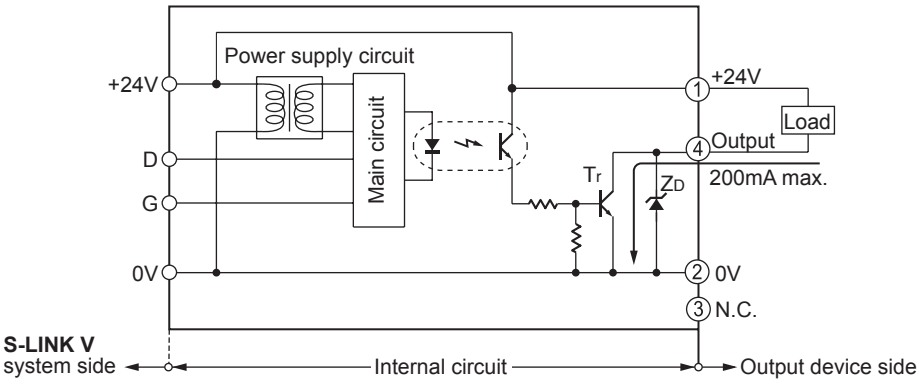

Symbols… Z_D: Surge absorption zener diode
T_r : NPN output transistor

<SL-VTP□E>

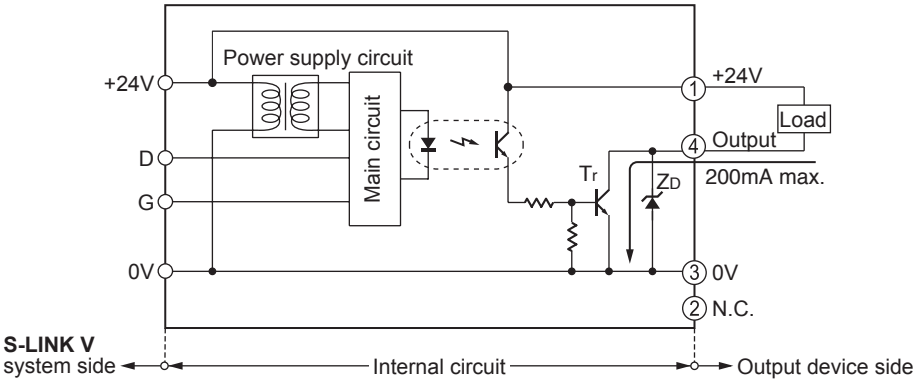

Symbols… Z_D: Surge absorption zener diode
T_r : NPN output transistor

<SL-VTP□J>

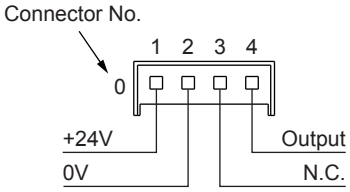

<SL-VTP□E>

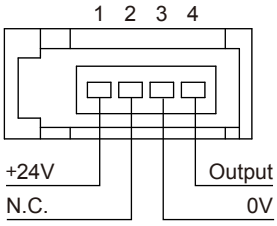

● Dimensions (Unit: mm)

<SL-VTP4J>

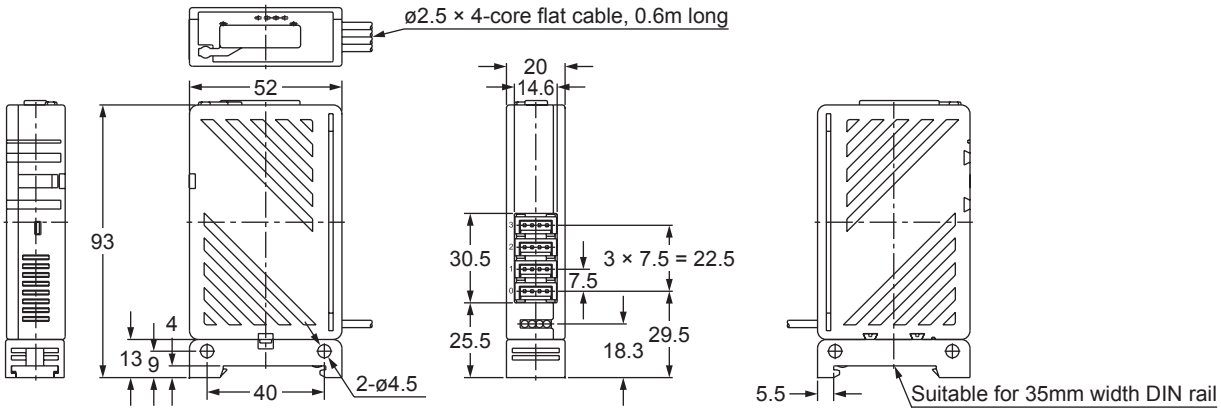

<SL-VTP4E>

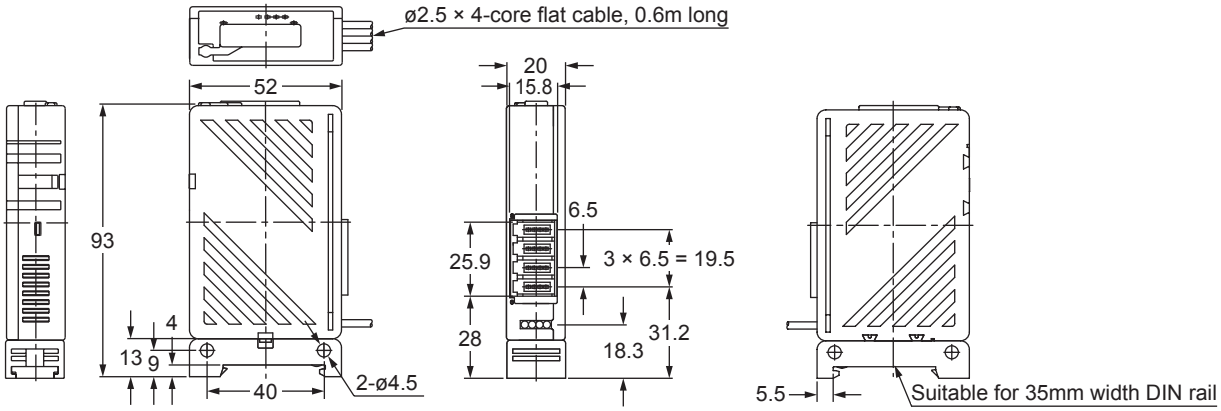

<SL-VTP8J>

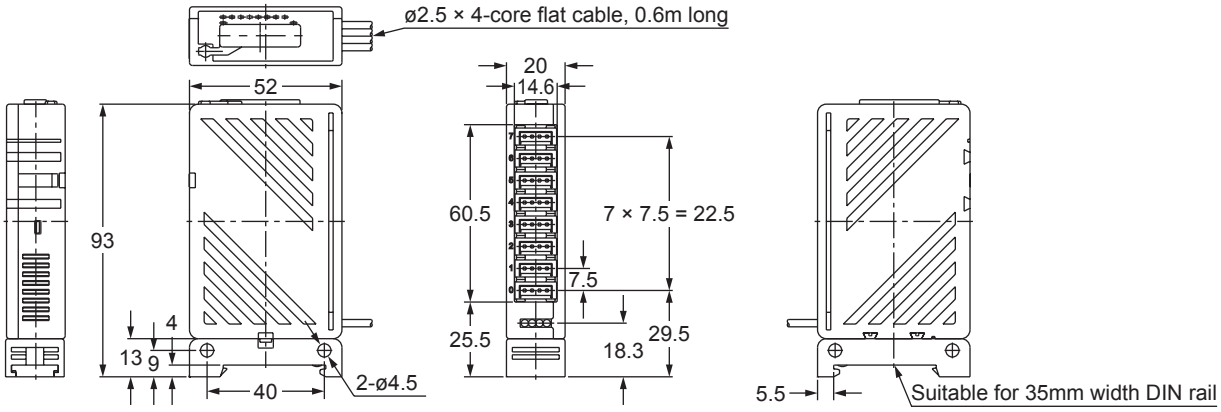

<SL-VTP8E>

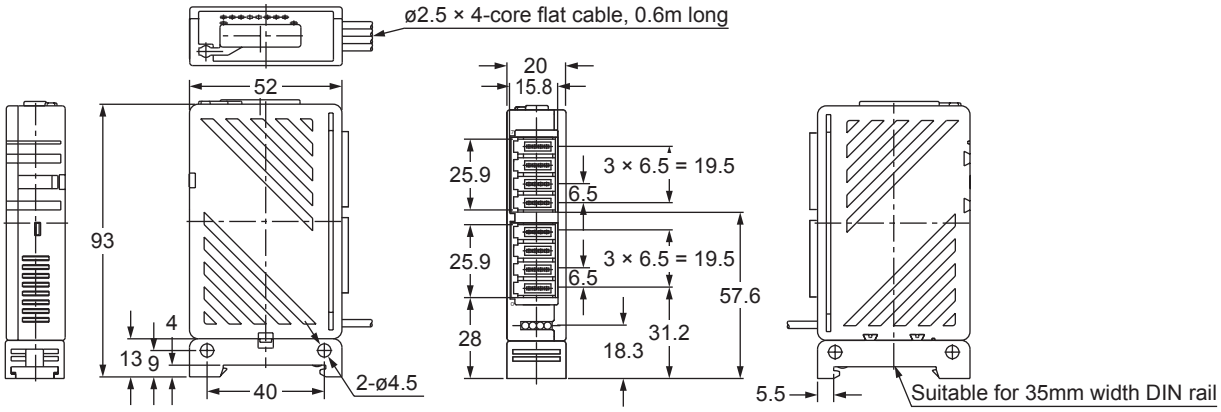

MIL connector input unit

(**SL-VT16C1**: 16-channel)

● Part description

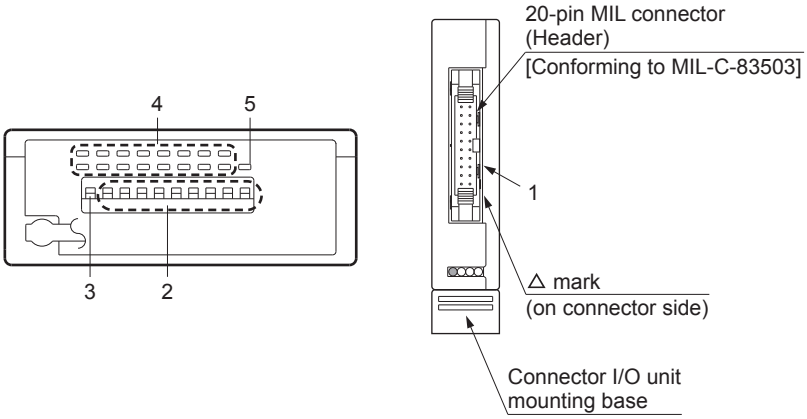

No.	Designation	Function
1	MIL connector for input device	Used for connection of the input device.
2	Address setting switches	Used for setting of terminal address.
3	Not Used	Not used. (Setting to the OFF status is recommended.)
4	Input indicators (Green)	Each indicator will light up when the input signal of the corresponding channel is turned ON.
5	Transmission indicator (Green)	This indicator will blink when the synchronization signal is sent from the **S-LINK V** controller.

● Specifications

Type		MIL connector input unit
Model No.		**SL-VT16C1**
Applicable connector		20-pin MIL connector (header) (Note 1)
Supply voltage		24V DC±10% (Supplied from **S-LINK V** controller or separate power supply)
Current consumption		80mA or less (when all points are ON)
Allowable passing current (Note 2)		Total: 1.2A or less
Address setting		Using switches, in the range of 0 to 511
Input		Photo-coupler input: • Current input: 5mA or less • Operation voltage: ON voltage: 17V or more (between input and +24V) OFF voltage: 4V or less (between input and +24V) • Input impedance: Approx. 6.3kΩ
Number of input points		16 points
Transmission indicator		Green LED (blinks when the synchronization signal is sent from the **S-LINK V** controller)
Input indicator		Green LED (lights up when the input signal of the corresponding channel is turned ON)
Environmental resistance	Ambient temperature (Note 3, 4)	-10 to +55ºC (No dew condensation or icing allowed), Storage: -20 to +70ºC
	Ambient humidity	35 to 85% RH, Storage: 35 to 85% RH
	Noise immunity	Power line: 500Vp, 10ms cycle, 1μs pulse width Common: 1,000Vp, 10ms cycle, 1μs pulse width (with noise simulator)
	Voltage withstandability	1,000V AC for one min. between all terminals connected together and enclosure
	Insulation resistance	20MΩ, or more, with 500V DC megger between all terminals connected together and enclosure
	Vibration resistance	10 to 150Hz frequency, 0.75mm amplitude or maximum acceleration 49m/s² in X, Y and Z directions for two hours each
	Shock resistance	490m/s^2 acceleration (approx. 50G) in X, Y and Z directions for three times each
Mounting		Mounted on DIN rail or by tightening screws
Tightening torque		Mounting screw: 0.8N·m or less
Material		Enclosure: ABS, Mounting base: POM
Cable		0.5mm^2 4-core flat cable, 0.6m long
Weight		Approx. 80g
Accessory		Connector I/O unit mounting base: 1 pc.

Notes: 1) Purchase separately a compliant product with MIL-C-83503.
2) Each value includes the current consumption of this unit and connected machine.
3) If this product is stored in the control panel together with the other units, the temperature may rise above the specified operation temperature due to the heat generated by the other units.
In this case, install a cooling fan, etc. so that the ambient temperature can be in the specified range.
4) In some cases, you cannot install the same **SL-VT16C1** units close to each other, or **SL-VT16C1** units and other I/O units close to each other. The distance between these units depends on the ambient temperature.
While referring to the following figure, secure enough distance between the units.

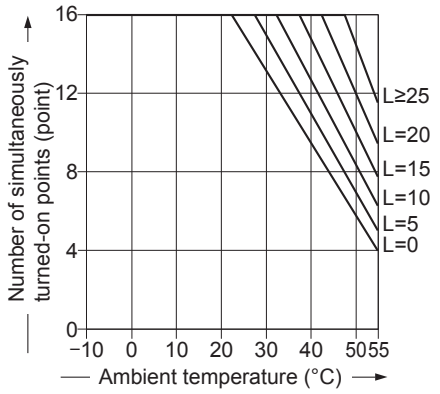

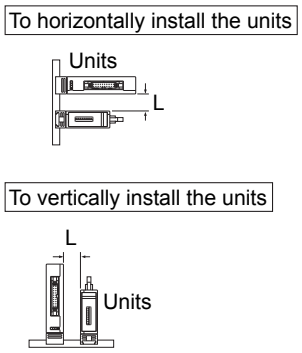

● Input circuit diagram and terminal layout drawing

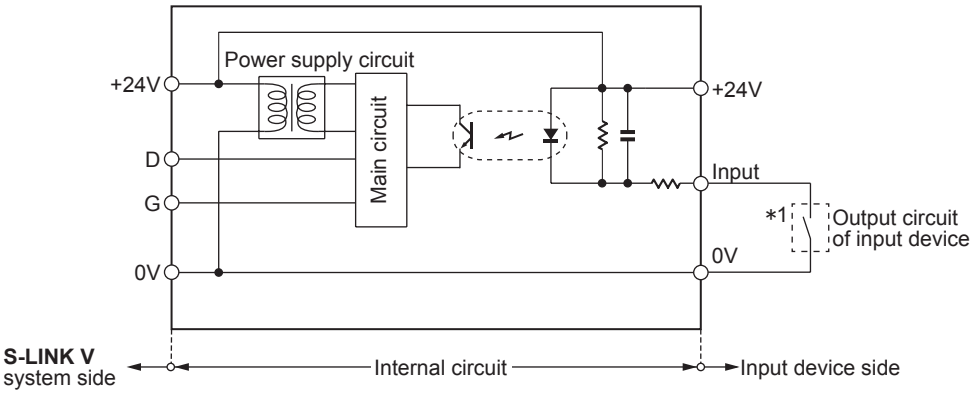

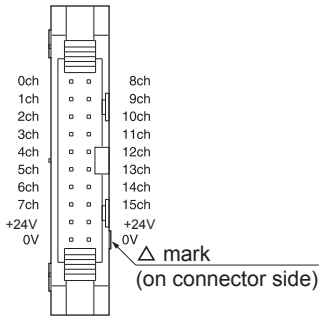

***1**

Non-voltage contact, NPN open-collector transistor or DC 2-wire output
- Current input: 5mA or less
- Operation voltage:
  ON voltage: 17V or more [between input and +24V]
  OFF voltage: 4V or less [between input and +24V]
- Input impedance: Approx. 6.3kΩ

● Dimensions (Unit: mm)

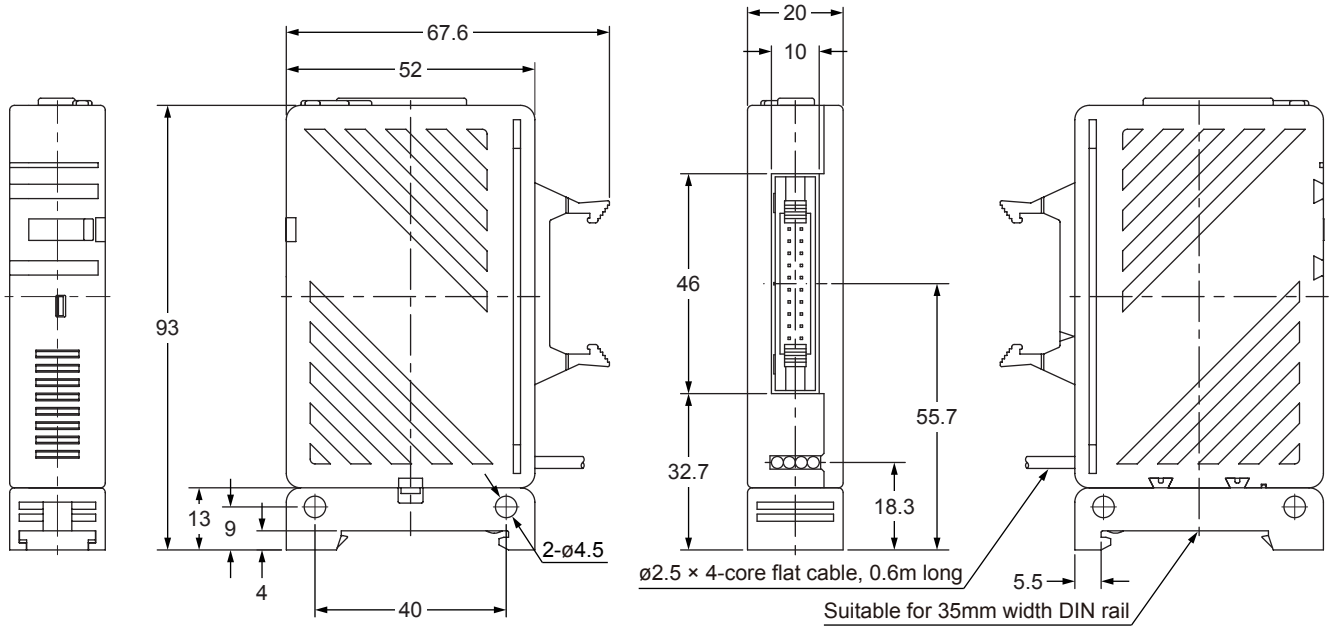

MIL connector output unit

(**SL-VTP16C1**, **SL-VTP16C1-S**: 16-channel)

● Part description

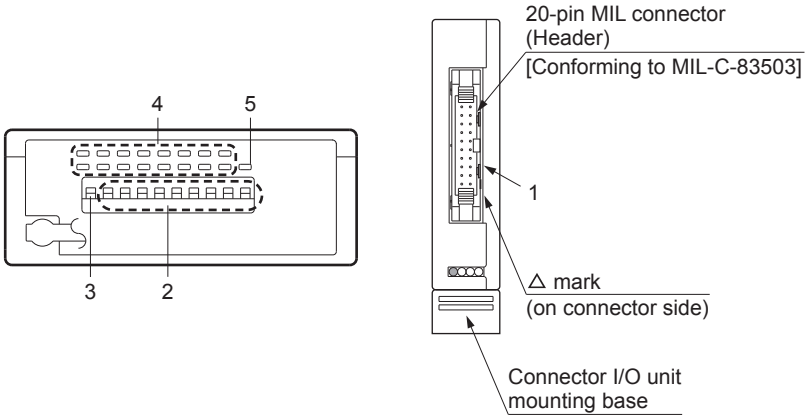

No.	Designation	Function
1	MIL connector for output device	Used for connection of the output machine. (The above figure shows the **SL-VTP16C1**. In the **SL-VTP16C1-S**, the MIL connector is in a different direction compared with that of the **SL-VTP16C1**. For a detailed description, refer to page 120.)
2	Address setting switches	Used for setting of address.
3	Output holding function setting switch	Used for setting of the output holding function. ON: Holds the current output conditions (output holding). OFF: Will not hold the current output conditions (output OFF).
4	Output indicators (Orange)	Each indicator will light up when the output signal of the corresponding channel is turned ON.
5	Transmission indicator (Green)	This indicator will blink when the synchronization signal is sent from the **S-LINK V** controller.

● Specifications

Type		MIL connector output unit	
Model No.		**SL-VTP16C1**	**SL-VTP16C1-S**
Applicable connector		20-pin MIL connector (header) (Note 1)	
Supply voltage		24V DC±10% (Supplied from **S-LINK V** controller or separate power supply)	
Current consumption		50mA or less (when all points are ON)	
Allowable passing current (Note 2)		Total: 1.2A or less	
Address setting		Using switches, in the range of 0 to 511	
Output		NPN open-collector transistor (photo-isolation) • Maximum sink current: 100mA • Applied voltage: 30V DC or less (between output and 0V) • Residual voltage: 1.5V or less (at 100mA sink current) 0.4V or less (at 16mA sink current)	
	Output operation	The output transistor will be turned on if the output signal is sent from the signal transmission line	
	Short-circuit protection	Incorporated (Note 3)	
Number of output points		16 points	
Transmission indicator		Green LED (blinks when the synchronization signal is sent from the **S-LINK V** controller)	
Output indicator		Orange LED (lights up when the output signal of the corresponding channel is turned ON)	
Output holding function		Incorporated	
Environmental resistance	Ambient temperature (Note 4, 5)	-10 to +55ºC (No dew condensation or icing allowed), Storage: -20 to +70ºC	
	Ambient humidity	35 to 85% RH, Storage: 35 to 85% RH	
	Noise immunity	Power line: 500Vp, 10ms cycle, 1μs pulse width Common: 1,000Vp, 10ms cycle, 1μs pulse width (with noise simulator)	
	Voltage withstandability	1,000V AC for one min. between all terminals connected together and enclosure	
	Insulation resistance	20MΩ, or more, with 500V DC megger between all terminals connected together and enclosure	
	Vibration resistance	10 to 150Hz frequency, 0.75mm amplitude or maximum acceleration 49m/s² in X, Y and Z directions for two hours each	
	Shock resistance	490m/s^2 acceleration (approx. 50G) in X, Y and Z directions for three times each	
Mounting		Mounted on DIN rail or by tightening screws	
Tightening torque		Mounting screw: 0.8N·m or less	
Material		Enclosure: ABS, Mounting base: POM	
Cable		0.5mm^2 4-core flat cable, 0.6m long	
Weight		Approx. 80g	
Accessory		Connector I/O unit mounting base: 1 pc.	

Notes: 1) Purchase separately a compliant product with MIL-C-83503.
2) Each value includes the current consumption of this unit and connected machine.
3) If one of the output channels is shorted, the short-circuit protective function will be activated to protect all the channels, and outputting signals to the external machine will be stopped. Eliminate the cause of the problem, and the system will be automatically restored.
4) If this product is stored in the control panel together with the other units, the temperature may rise above the specified operation temperature due to the heat generated by the other units.
In this case, install a cooling fan, etc. so that the ambient temperature can be in the specified range.
5) In some cases, you cannot install the same **SL-VTP16C1**(**-S**) units close to each other, or **SL-VTP16C1**(**-S**) units and other I/O units close to each other. The distance between these units depends on the ambient temperature.
While referring to the following figure, secure enough distance between the units.

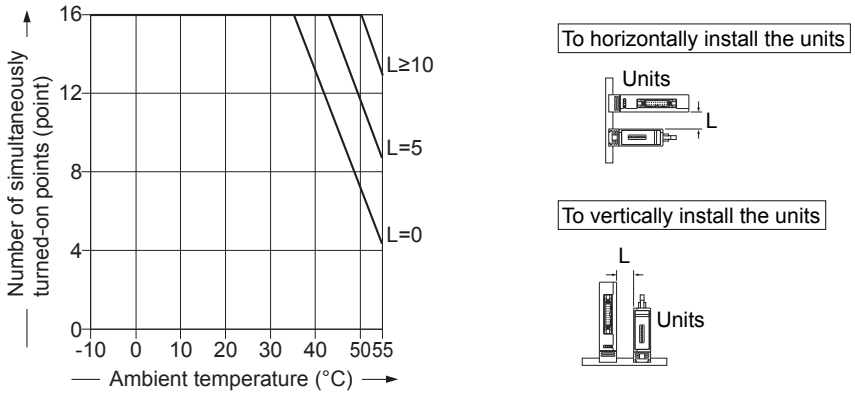

● Output circuit diagram and terminal layout drawing

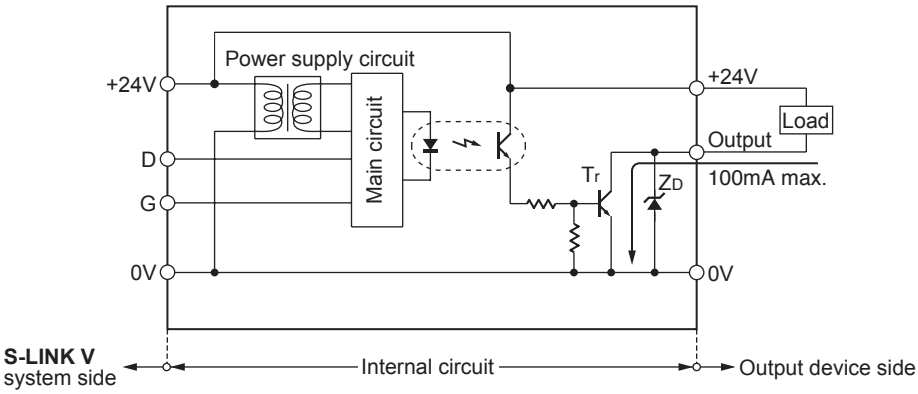

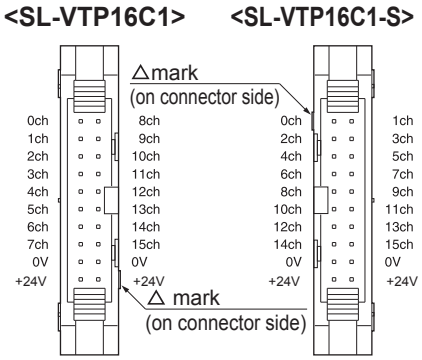

Symbols… Z_D: Surge absorption zener diode
T_r : NPN output transistor

● Dimensions (Unit: mm)

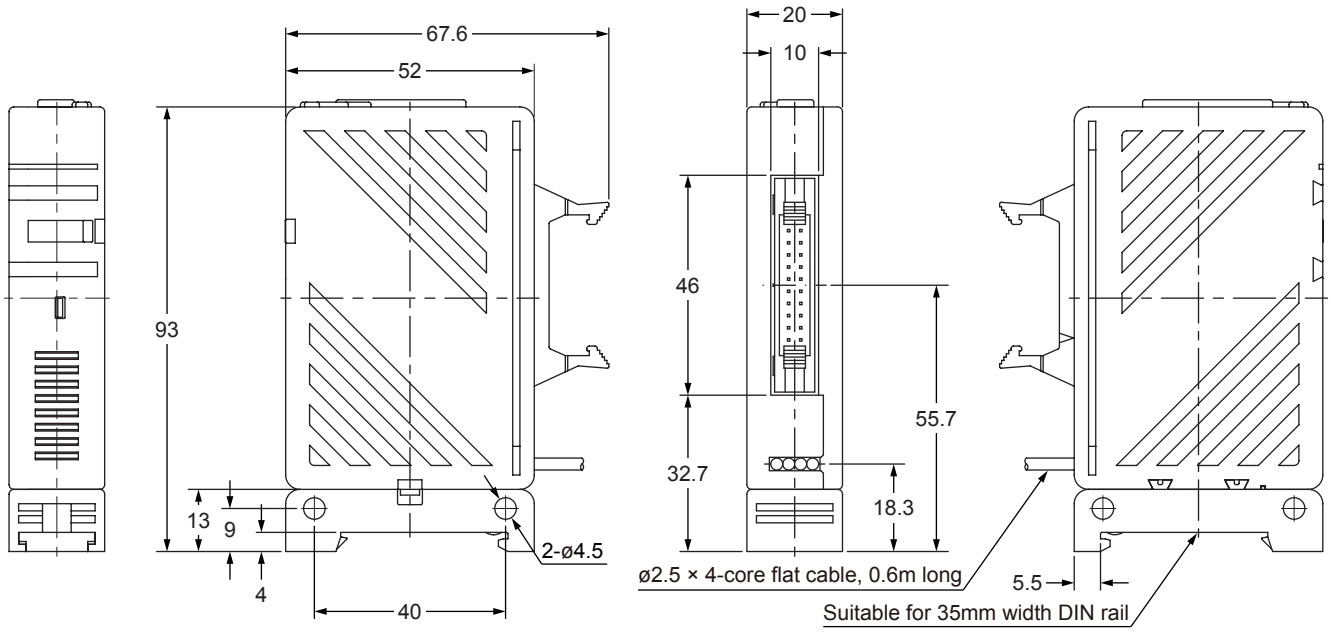

Analogue input unit

● Part description

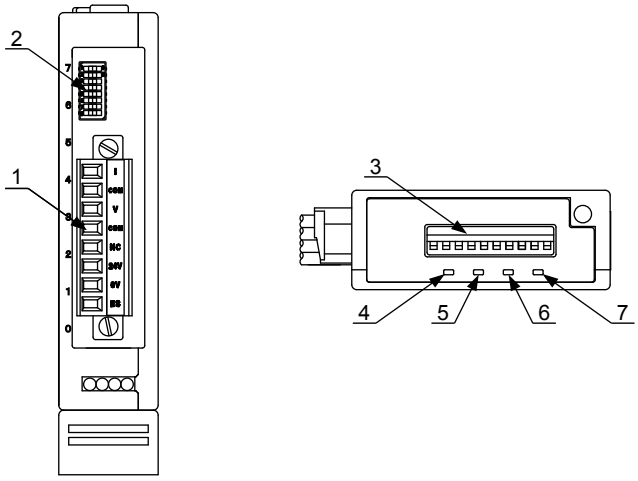

No.	Designation	Function		
1	Terminal connector	I		Current input terminal
		COM		Analogue GND
		V		Pressure input terminal
		COM		Analogue GND
		NC		Not connected
		24V		Power supply for external synchronization input device +24V (output)
		0V		Power supply for external synchronization input device 0V
		ES		External synchronization input terminal
2	Input range setting switch (Note)	1	NOT USED	Not used. (Be sure to set 'OFF' side)
		2	NOT USED	
		3	RANGE-1	Switch for input range Input range / RANGE-1 / RANGE-2 4 to 20mA / OFF / OFF +1 to +5V / ON / OFF 0 to +10V / OFF / ON -10 to +10V / ON / ON
		4	RANGE-2	
		5	ES	Valid / Invalid of the external synchronization input is set. (ON side: valid) In case the external synchronization input is valid, A/D conversion is carried out only when the input is ON and the data is stored when it is OFF.
		6	AVERAGE	Valid / Invalid of the averaging process is set. (ON side: valid) In case the averaging process is valid, the previously taken A/D conversion data (max. of 99 times) and the current data are averaged to carry out A/D conversion. The response time is approx. 50ms (Excluding the delay of **S-LINK V** response time)
		7	HOLD	Valid / Invalid of the hold function is set. (ON side: valid) This is used along with PEAK / BOTTOM switch.
		8	PEAK / BOTTOM	Can be used when the hold function is valid. (ON side: BOTTOM) When set to PEAK, the max. value of the data is maintained. When set to BOTTOM, the min. value of the data is maintained.
3	Address setting switch	Address is set.		
4	Power indicator (Green)	Lights up when the power is ON.		
5	Transmission indicator (Green)	Blinks to indicate the synchronization signal transmission from **S-LINK V** controller.		
6	External synchronizaion signal input indicator (Green)	Lights up when external synchronization signal is input.		
7	Error indicator (Red)	Lights up when an error occurs.		

Note: Each setting is independent respectively.

● Specifications

Designation		Analogue input unit
Model No.		**SL-VTAD1**
Supply voltage		24V DC±10% (supplied from the **S-LINK V** controller or separate power supply)
Current consumption		80mA or less (excluding connecting device)
Address setting		0 to 511, settable with switch (Note 1, 2)
Resolution		1/4,000 (12 bits)
Total accuracy		Within ±0.8% F.S. (at -10 to +55°C ambient temperature)
Analogue input	Channel No.	1 channel
	Input range	Selectable with switch • Current input: 4 to 20mA • Voltage input: +1 to +5V, 0 to +10V, -10 to +10V
	Input impedance	Current input: Approx. 250Ω, Voltage input: Approx. 1MΩ
External synchronization input		Photocoupler input • Input current: 9mA or less • Operation voltage: ON voltage 17V or more (between input and +24V) OFF voltage 4V or less (between input and +24V) • Input impedance: Approx. 3.3kΩ
Data conversion time		Approx. 1ms (excluding the delay of **S-LINK V** system transmission time)
Occupied input No.		16 points
Indicators	Power	Green LED (lights up when the power is ON)
	Transmission	Green LED (blinks to indicate the synchronization signal transmission from **S-LINK V** controller)
	External synchronization signal input	Green LED (lights up when external synchronization signal is input)
	Error	Red LED (lights up when error occurs)
Environmental resistance	Ambient temperature (Note 3)	-10 to +55°C (No dew condensation or icing allowed), Storage: -20 to +70°C
	Ambient humidity	35 to 85% RH, Storage: 35 to 85% RH
	Noise immunity	Power line: 500Vp, 10ms cycle, 1μs pulse width Common: 1,000Vp, 10ms cycle, 1μs pulse width (with noise simulator)
	Voltage withstandability	1,000V AC for one min. between all terminals connected together and enclosure
	Insulation resistance	20MΩ, or more, with 500V DC megger between all terminals connected together and enclosure
	Vibration resitance	10 to 150Hz frequency, 0.75mm amplitude or maximum acceleration 49m/s² in X, Y and Z directions for two hours each
	Shock resistance	490m/s^2 acceleration (approx. 50G) in X, Y and Z directions for three times each
Mounting		Mounted on DIN rail or by tightening screws
Tightening torque		Mounting screw: 0.8N·m or less
Material		Enclosure: ABS, Mounting base: POM
Cable		0.5mm^2 4-core flat cable, 0.6m long
Weight		Approx. 100g
Accessory		Analogue input unit mounting base: 1pc.

Notes: 1) The data of the address excessing I/O control points is invalid.
2) Be sure to set the 'NOT USED' switch to 'OFF.' If the switch is set to 'ON,' this unit doesn't operate properly.
3) If this product is stored in the control panel together with the other units, the temperature may rise above the specified operation temperature due to the heat generated by the other units.
In this case, install a cooling fan, etc. so that the ambient temperature can be in the specified range.

● Input circuit diagrams and terminal layout drawing

<Current input>

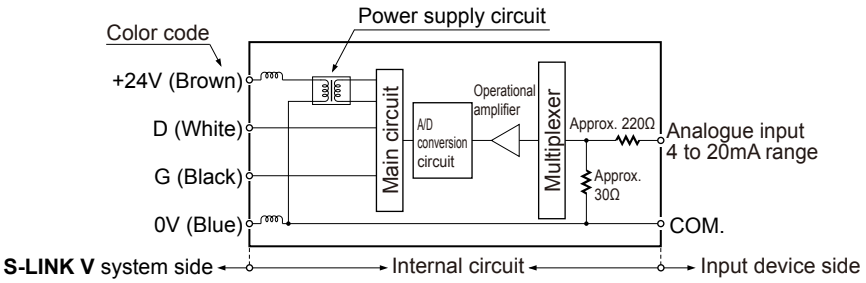

<Voltage input>

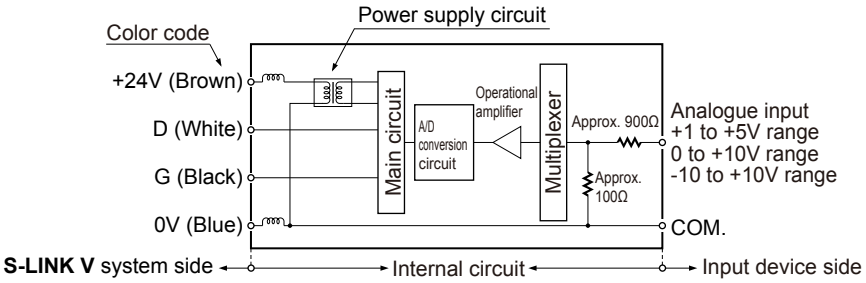

<External synchronization input>

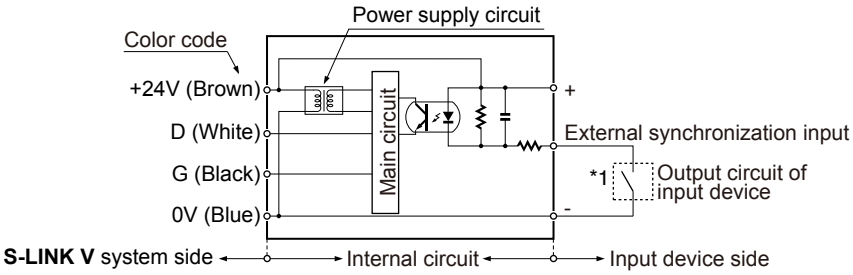

***1**

Non-voltage contact, NPN open-collector transistor or DC 2-wire output
- Current input: 9mA or less
- Operation voltage:
  ON voltage: 17V or more [between input and +24V]
  OFF voltage: 4V or less [between input and +24V]
- Input impedance: Approx. 3.3kΩ

When the shield cable is used, connect the shield wire to the frame ground etc. in the analogue output device side. However, take care that there may be cases where it is better not to connect the shield wire depending on the mounting conditions.

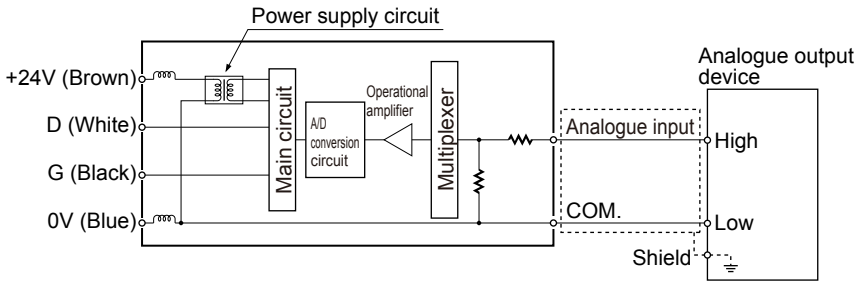

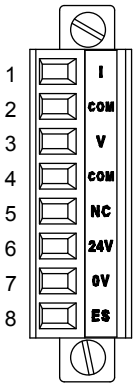

No.	Terminal	Function
1	I	Current input terminal
2	COM	Analogue GND
3	V	Voltage input terminal
4	COM	Analogue GND
5	NC	Not connected
6	24V	Power supply for external synchronization input device +24V (output)
7	0V	Power supply for external synchronization input device 0V
8	ES	External synchronization input terminal

● Analogue input and conversion data

● **4 to 20mA range**

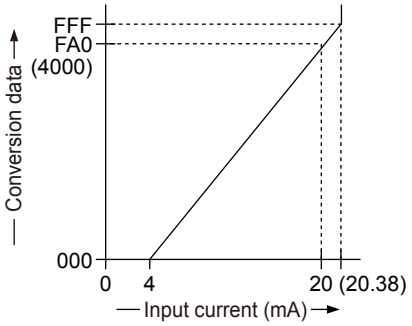

● **+1 to +5V range**

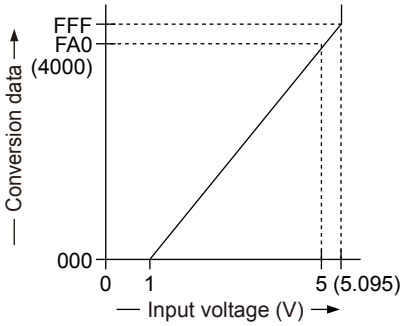

● **0 to +10V range**

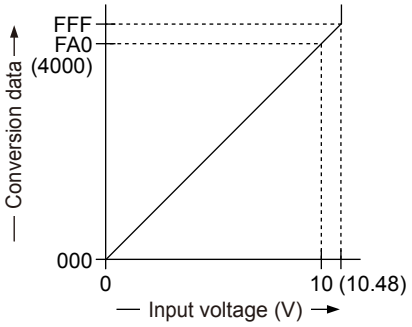

● **-10 to +10V range**

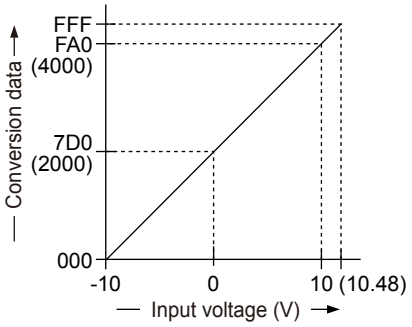

● Data bit

- Data bit has been allocated as shown in the table below.

Data bit	Signal
IN 0	Conversion data 0 bit (LSB)
IN 1	Conversion data 1 bit
IN 2	Conversion data 2 bit
IN 3	Conversion data 3 bit
IN 4	Conversion data 4 bit
IN 5	Conversion data 5 bit
IN 6	Conversion data 6 bit
IN 7	Conversion data 7 bit
IN 8	Conversion data 8 bit
IN 9	Conversion data 9 bit
IN 10	Conversion data 10 bit
IN 11	Conversion data 11 bit (MSB)
IN 12	Input range 1
IN 13	Input range 2
IN 14	External synchronization input
IN 15	Error

● Conversion process

<Time chart for normal conversion>

- A/D conversion in normal conversion is carried out every approx. 500μs. When taking in the conversion data (internal process), the latest A/D conversion data and current data are averaged.

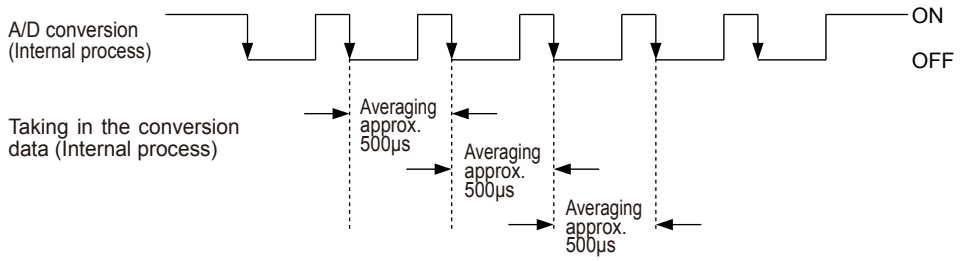

<Time chart for averaging process conversion>

- A/D conversion in averaging process conversion is carried out every approx. 500μs. When taking in the conversion data (internal process), the previously taken A/D conversion data (max. of 99 times) and the current data are averaged. When the data to take in exceeds 100 times, the earliest A/D conversion data is automatically erased. For example, in case the data to take is 101th, the A/D conversion data of 2nd to 101th are averaged. At this time, the 1st A/D conversion data is automatically erased.

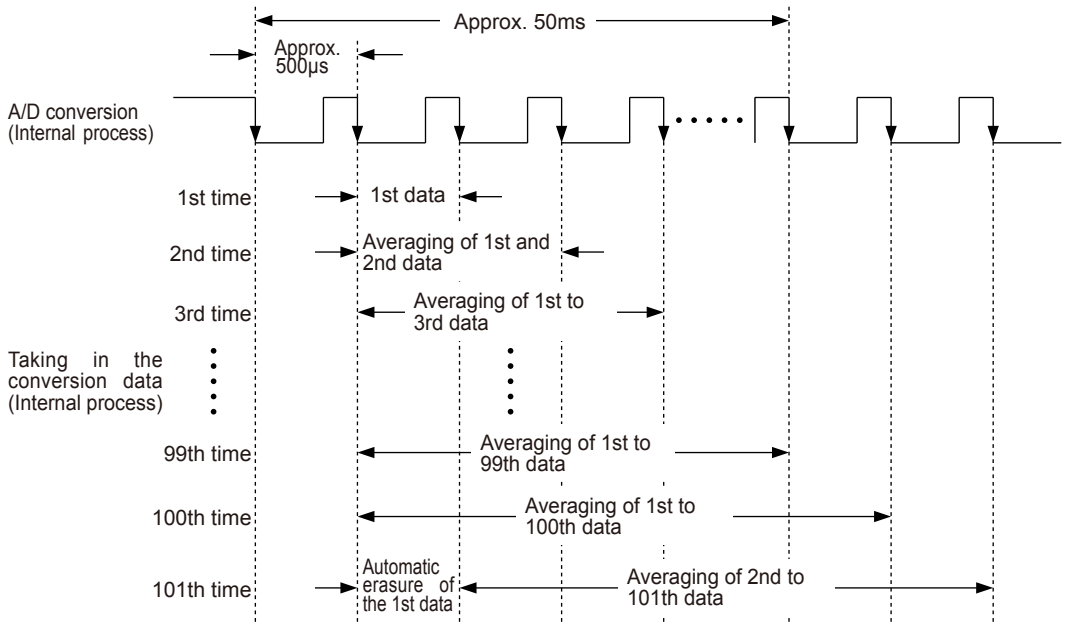

● Dimensions (Unit: mm)

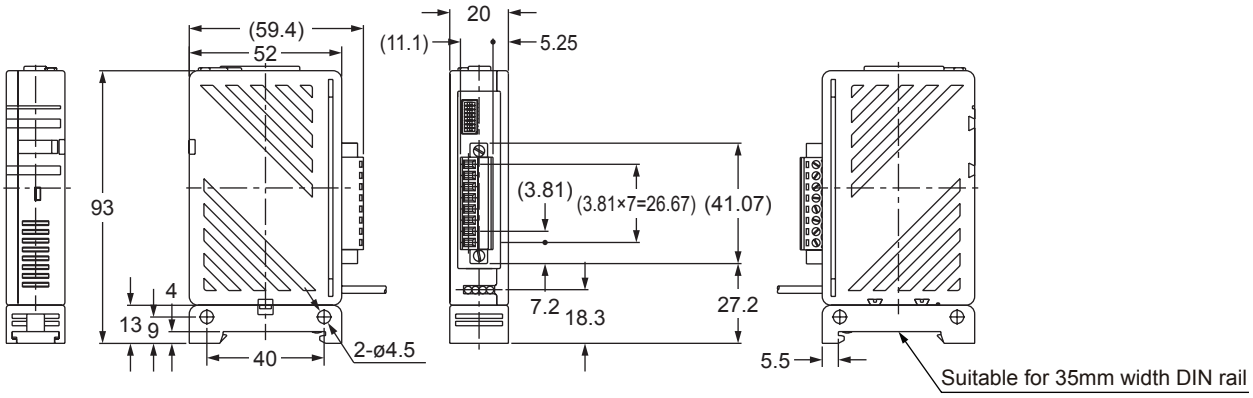

Analogue output unit

● Part description

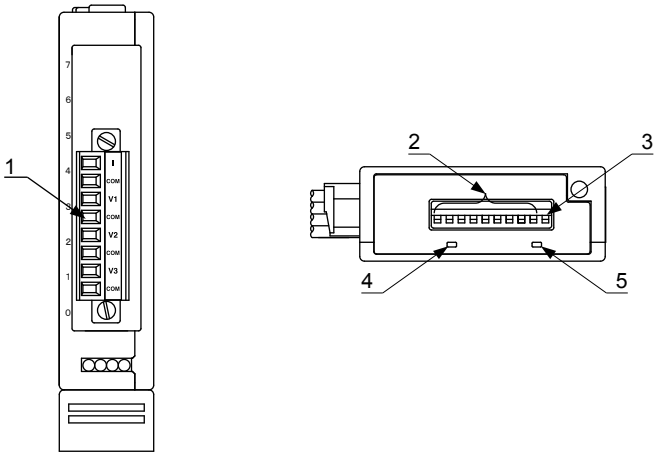

No.	Description	Function	
1	Terminal block connector	I	Current output terminal (4 to 20mA)
		COM	Analogue GND
		V1	Voltage output terminal (+1 to +5V)
		COM	Analogue GND
		V2	Voltage output terminal (0 to +10V)
		COM	Analogue GND
		V3	Voltage output terminal (±10V)
		COM	Analogue GND
2	Address setting switch	Address is set.	
3	Output hold setting switch	It is used to set the output hold function.	
4	Power indicator (Green)	Lights up when the power is ON.	
5	Transmission indicator (Green)	Blinks when the synchronization signal is sent from the **S-LINK V** controller	

● Specifications

Designation		Analogue output unit
Model No.		**SL-VTDA1**
Supply voltage		24V DC±10% (supplied from the **S-LINK V** controller or separate power supply)
Current consumption		90mA or less (excluding connecting device)
Address setting		0 to 511, settable with switch (Note 1)
Resolution		1/4,000 (12 bits)
Total accuracy		Within ±0.8%F.S. (at -10 to +55°C ambient temperature)
Analogue output	Channel No.	1 channel
	Output range	Selectable with switch • Current output: 4 to 20mA • Voltage output: +1 to +5V 0 to +10V -10 to +10V
	Output allowable load resistance	Current output: 250Ω or less, Voltage output: 1kΩ or more
Data conversion time		Approx. 1ms (excluding the delay of **S-LINK V** system transmission time)
Occupied output No.		12 points
Power indicator		Green LED (lights up when the power is ON)
Transmission indicator		Green LED (blinks to indicate the synchronization signal transmission from **S-LINK V** controller)
Output holding function		Incorporated
Environmental resistance	Ambient temperature (Note 2)	-10 to +55°C (No dew condensation or icing allowed), Storage: -20 to +70°C
	Ambient humidity	35 to 85% RH, Storage: 35 to 85% RH
	Noise immunity	Power line: 500Vp, 10ms cycle, 1μs pulse width Common: 1,000Vp, 10ms cycle, 1μs pulse width (with noise simulator)
	Voltage withstandability	1,000V AC for one min. between all terminals connected together and enclosure
	Insulation resistance	20MΩ, or more, with 500V DC megger between all terminals connected together and enclosure
	Vibration resitance	10 to 150Hz frequency, 0.75mm amplitude or maximum acceleration 49m/s² in X, Y and Z directions for two hours each
	Shock resistance	490m/s^2 acceleration (approx. 50G) in X, Y and Z directions for three times each
Mounting		Mounted on DIN rail or by tightening screws
Tightening torque		Mounting screw: 0.8N·m or less
Material		Enclosure: ABS, Mounting base: POM
Cable		0.5mm^2 4-core flat cable, 0.6m long
Weight		Approx. 100g
Accessory		Analogue output unit mounting base: 1pc.

Notes: 1) The data of the address exceeding I/O control points is invalid.
2) If this product is stored in the control panel together with the other units, the temperature may rise above the specified operation temperature due to the heat generated by the other units.
In this case, install a cooling fan, etc. so that the ambient temperature can be in the specified range.

● Output circuit diagrams and terminal layout drawing

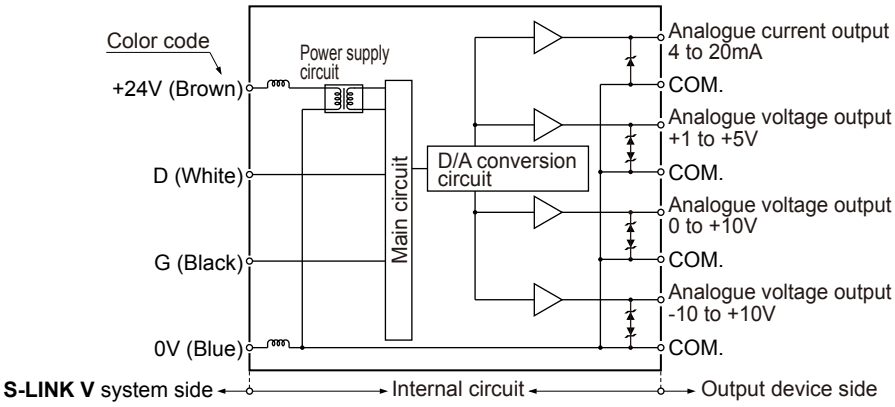

When the shield cable is used, connect the shield wire to the frame ground etc. in the analogue input device side. However, take care that there may be cases where it is better not to connect the shield wire depending on the mounting conditions.

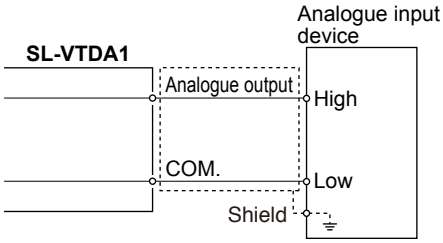

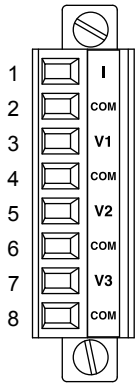

No.	Terminal	Function
1	I	Current output terminal (4 to 20mA)
2	COM	Analogue GND
3	V1	Voltage output terminal (+1 to +5V)
4	COM	Analogue GND
5	V2	Voltage output terminal (0 to +10V)
6	COM	Analogue GND
7	V3	Voltage output terminal (-10 to +10V)
8	COM	Analogue GND

● Analogue output and conversion data

● **4 to 20mA range**

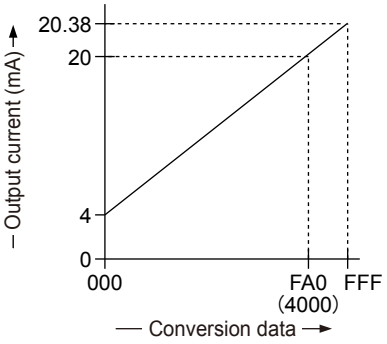

● **+1 to +5V range**

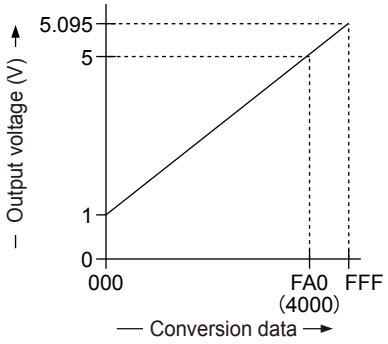

● **0 to +10V range**

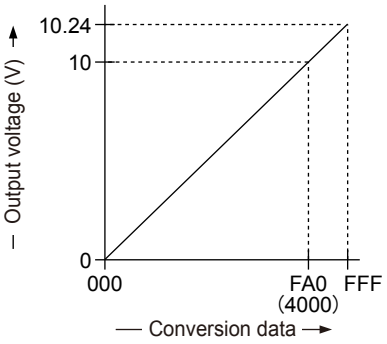

● **-10 to +10V range**

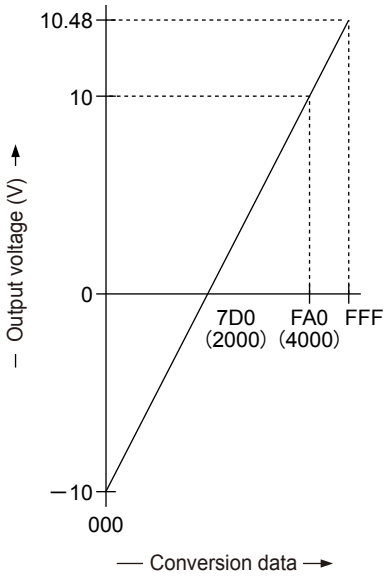

● Data bit

- Data bit has been allocated as shown in the table below.

Data bit	Signal
OUT 0	Conversion data 0 bit (LSB)
OUT 1	Conversion data 1 bit
OUT 2	Conversion data 2 bit
OUT 3	Conversion data 3 bit
OUT 4	Conversion data 4 bit
OUT 5	Conversion data 5 bit
OUT 6	Conversion data 6 bit
OUT 7	Conversion data 7 bit
OUT 8	Conversion data 8 bit
OUT 9	Conversion data 9 bit
OUT 10	Conversion data 10 bit
OUT 11	Conversion data 11 bit (MSB)

● Dimensions (Unit: mm)

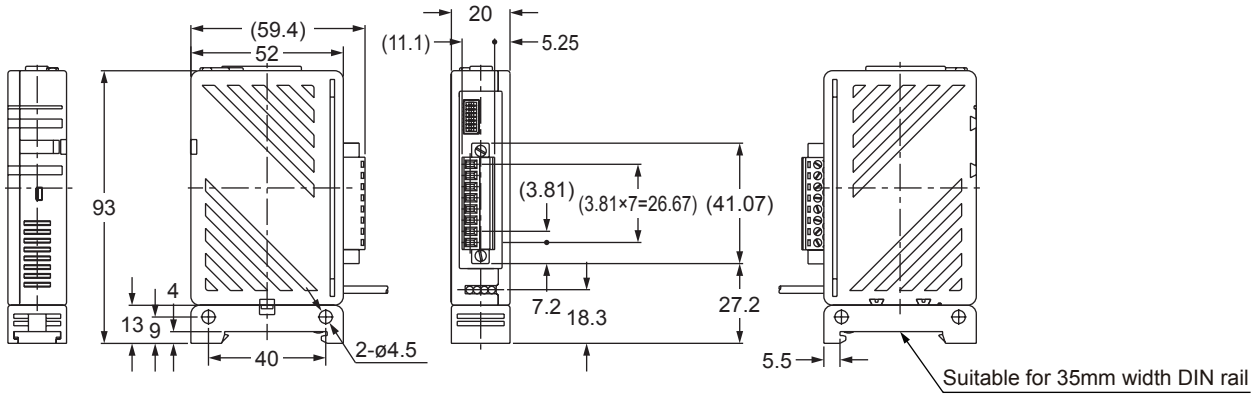

Relay output terminal

(**SL-VTPR4**: 4-channel, **SL-VTPR8**: 8-channel)

● Part description

<SL-VTPR4>

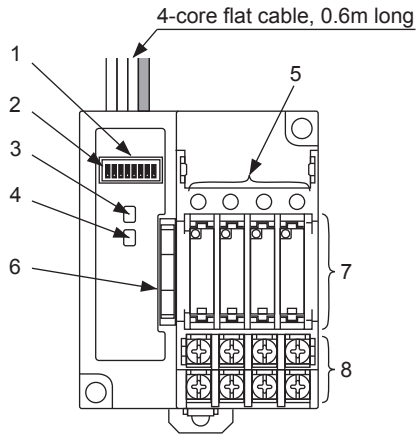

<SL-VTPR8>

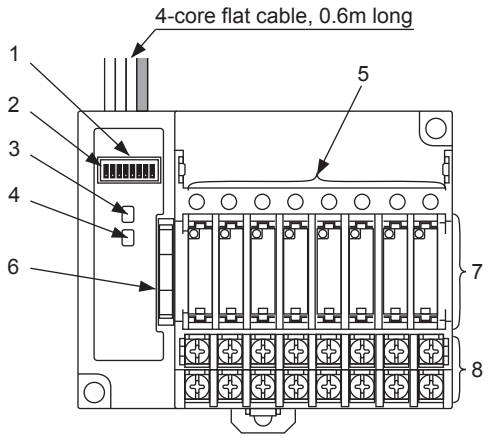

No.	Designation	Function
1	Address setting switches	Used for setting of the terminal address.
2	Output holding function setting switch	Used for setting of the output holding function. ON: Hold the current output conditions (output holding). OFF: Will not hold the current output conditions (output OFF).
3	Power indicator (Green)	This indicator will light up when the power is supplied.
4	Transmission indicator (Green)	This indicator will blink when the synchronization signal is sent from the **S-LINK V** controller.
5	Operation indicator (Orange)	Lights up when each output relay is turned ON.
6	Relay remover key	Use this key to remove the output relays.
7	Output relay	PA-N relay APAN3124 manufactured by Panasonic Corporation. (Note)
8	Terminal block	Used for connection of output devices.

Note: You can replace the output relays.

● Specifications

Type		4-channel	8-channel
Model No.		**SL-VTPR4**	**SL-VTPR8**
Supply voltage		24V DC±10% (Supplied from **S-LINK V** controller or separate power supply)	
Current consumption		90mA or less (When all points are ON)	150mA or less (When all points are ON)
Address setting		Using switches, in the range of 0 to 511	
Output		Relay contact 1a (Note 1) • Switching capacity: 50V, 3A AC (resister load) However, if compatibility with the CE is not necessary, use of 250V, 3A AC is possible. 30V, 3A DC (resister load) • Electrical service life: 100,000 times of operation or more (rated load, switching frequency of 20 times/min) • Mechanical service life: 20,000,000 times of operation or more (switching frequency of 180 times/min)	
	Output operation	The output relay is turned ON if the output signal from the signal transmission line is turned ON.	
Number of output points		4 points	8 points
Indicators	Power	Green LED (lights up when the power is supplied)	
	Transmission	Green LED (blinks when the synchronization signal is sent from the **S-LINK V** controller)	
	Operation	Orange LED (lights up when each channel relay is turned ON)	
Output holding function		Incorporated	
Environmental resistance	Ambient temperature (Note 2)	-10 to +55°C (No dew condensation or icing allowed), Storage: -20 to +70°C	
	Ambient humidity	35 to 85% RH, Storage: 35 to 85% RH	
	Noise immunity	Power line: 500Vp, 10ms cycle, 1μs pulse width Common: 1,000Vp, 10ms cycle, 1μs pulse width (with noise simulator)	
	Voltage withstandability	1,000V AC for one min. between all terminals connected together and enclosure	
	Insulation resistance	20MΩ, or more, with 500V DC megger between all terminals connected together and enclosure	
	Vibration resistance	10 to 150Hz frequency, 0.75mm amplitude or maximum acceleration 49m/s² in X, Y and Z directions for two hours each	
	Shock resistance	490m/s^2 acceleration (approx. 50G) in X, Y and Z directions for two hours each	
Mounting		Mounted on DIN rail or by tightening screws	
Tightening torque		Mounting screw: 0.8N·m or less	
Material		Enclosure: PC-ABS resin, Cover: Polycarbonate, DIN rail stopper: POM, Relay remover key: POM	
Cable		0.5mm^2 4-core flat cable, 0.6m long	
Weight		Approx. 100g	Approx. 160g
Accessories		Cover: 1 pc., Switch cap: 1 pc., Relay remover key: 1 pc.	

Notes: 1) This product is incorporated with the PA-N relay manufactured by Panasonic Corporation. However, when you replace the relay, you can also use the PhotoMOS relay manufactured by Panasonic Corporation.
For a detailed description, refer to the Instruction Manual enclosed with the **SL-VTPR**□.
2) If this product is stored in the control panel together with the other units, the temperature may rise above the specified operation temperature due to the heat generated by the other units.
In this case, install a cooling fan, etc. so that the ambient temperature can be in the specified range.

*Ambient temperature and number of photoMOS relay ON points - Load current characteristics
The upper limit value of the load current depends on the ambient temperature and the number of photoMOS relay ON points.

SL-VTPR8+AQZ202D

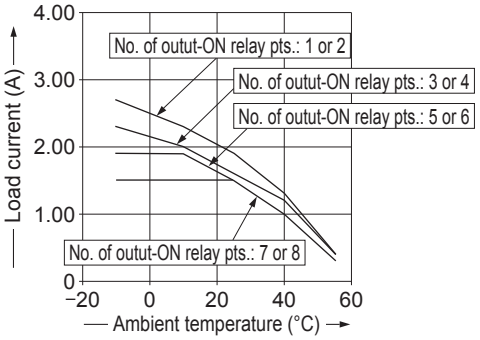

SL-VTPR8+AQZ204D

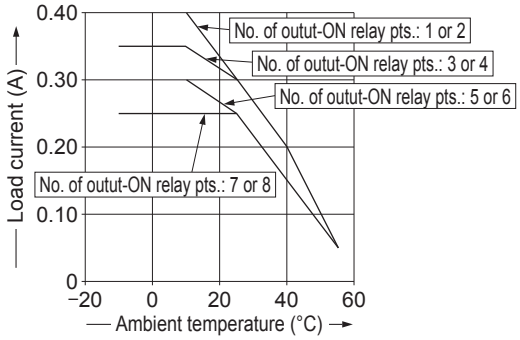

SL-VTPR8+AQZ205D

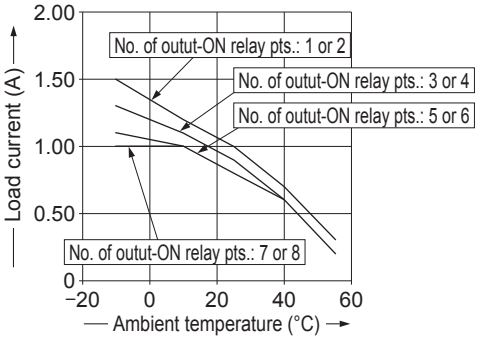

SL-VTPR8+AQZ207D

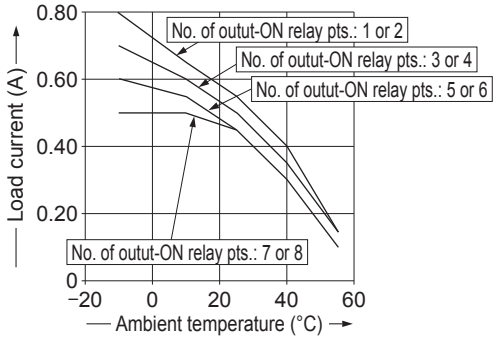

● Output circuit diagram (for 1 channel) and terminal layout drawing

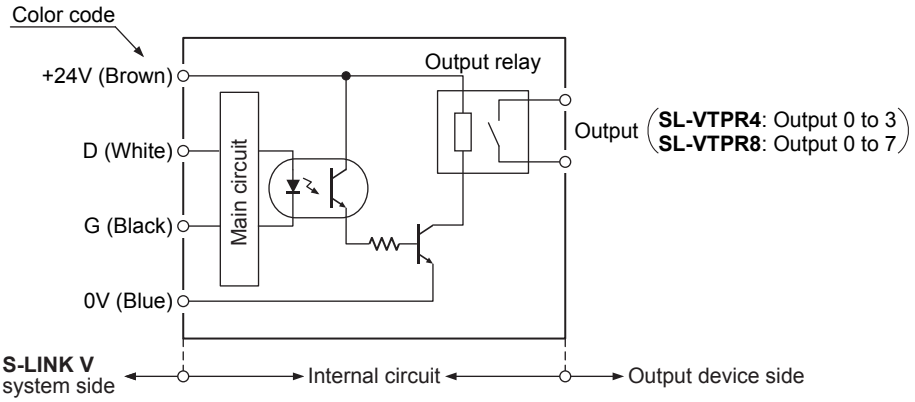

<SL-VTPR4>

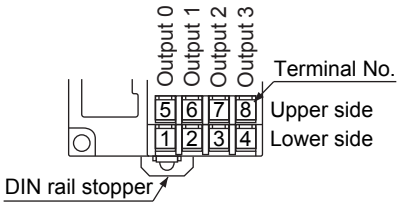

Output	Output 0	Output 1	Output 2	Output 3
Terminal No.	5	6	7	8
	1	2	3	4

<SL-VTPR8>

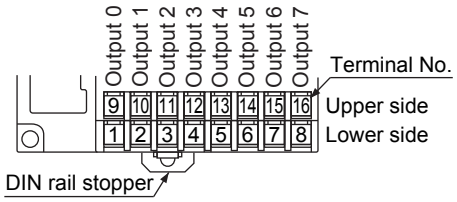

Output	Output 0	Output 1	Output 2	Output 3	Output 4	Output 5	Output 6	Output 7
Terminal No.	9	10	11	12	13	14	15	16
	1	2	3	4	5	6	7	8

● Dimensions (Unit: mm)

<SL-VTPR4>

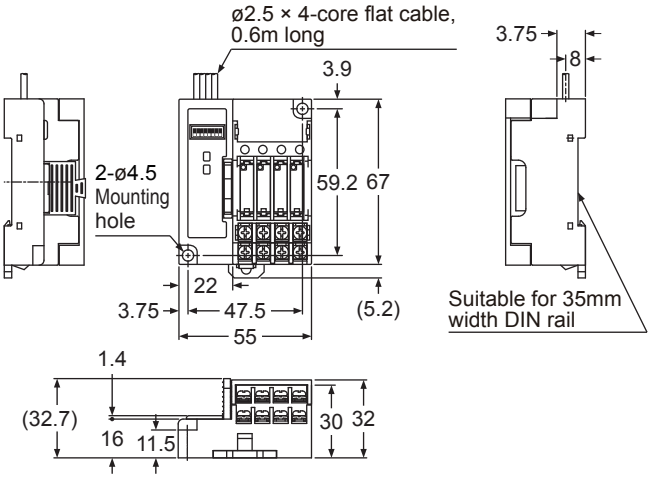

<SL-VTPR8>

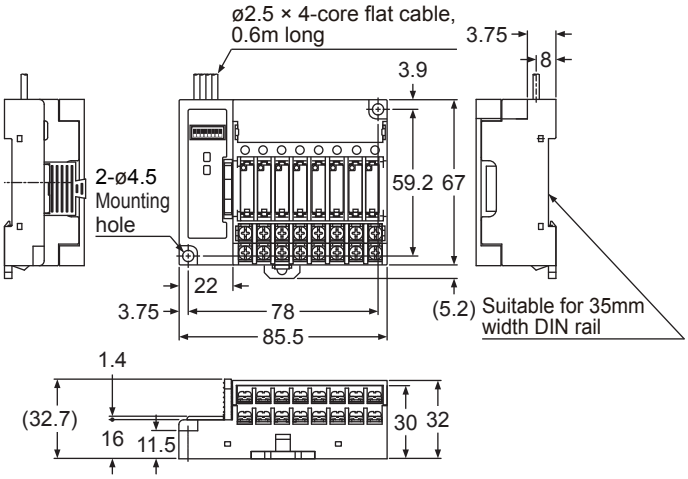

Input module

(**SL-VM8**: 8-channel, **SL-VM16**: 16-channel)

● Specifications

Type		8-channel	16-channel
Model No.		**SL-VM8**	**SL-VM16**
Supply voltage		24V DC±10% (Supplied from **S-LINK V** controller or separate power supply)	
Current consumption (24V DC)		18mA or less (Note 1)	20mA or less (Note 1)
Address setting		0 to 511 (Set by No.19 to 28)	
Input		Photo-coupler input: • Current input: 6mA or less • Operation voltage: ON voltage: 17V or more [between COM. (+) and IN] OFF voltage: 4V or less [between COM. (+) and IN] • Input impedance: Approx. 6.5kΩ	
Number of input points		8 points	16 points
Environmental resistance	Ambient temperature	-10 to +55°C (No dew condensation or icing allowed), Storage: -20 to +70°C	
	Ambient humidity	35 to 85% RH,Storage: 35 to 85% RH	
	Noise immunity	Power line: 500Vp, 10ms cycle, 1μs pulse width Common: 1,000Vp, 10ms cycle, 1μs pulse width (with noise simulator)	
	Vibration resistance	10 to 150Hz frequency, 0.75mm amplitude or maximum acceleration 49m/s² in X, Y and Z directions for two hours each	
Weight		Approx. 15g	

Notes: 1) This value does not include the current consumption of the connected input device.
2) The power supply circuit of this product does not have any short-circuit protective function. Adopt a short-circuit protective function, such as a fuse, for the power supply circuit.
3) In some cases, you cannot install the same **SL-VM16** units close to each other, or **SL-VM16** unit and **SL-VMP16** unit close to each other. The distance between these units depends on the ambient temperature.
While referring to the following figure, secure enough distance between the units.

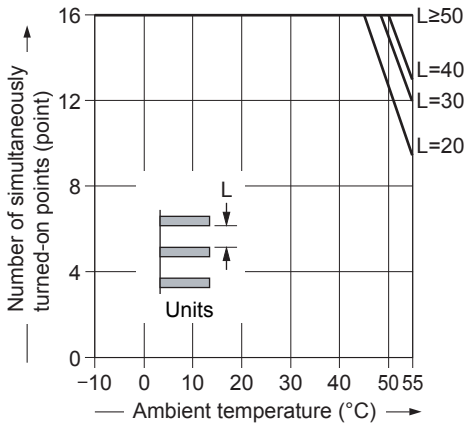

● Input circuit diagram and pin layout drawing

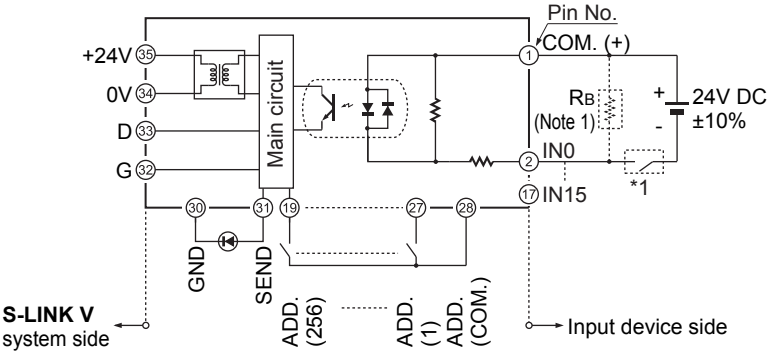

***1**

Non-voltage contact, NPN open-collector transistor or DC 2-wire output
- Current input: 6mA or less
- Operation voltage:
  ON voltage: 17V or more [between COM. (+) and IN]
  OFF voltage: 4V or less [between COM. (+) and IN]
- Input impedance: Approx. 6.5kΩ

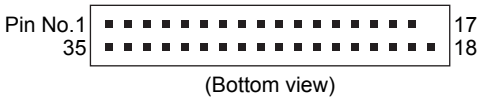

Pin No.	Description		Pin No.	Description	
1	COM. (+)	Input common	18	N.C.	Non-connection
2	IN 0	Input (Note 2)	19	ADD. (256)	Address setting input (Note 3)
3	IN 1		20	ADD. (128)	
4	IN 2		21	ADD. (64)	
5	IN 3		22	ADD. (32)	
6	IN 4		23	ADD. (16)	
7	IN 5		24	ADD. (8)	
8	IN 6		25	ADD. (4)	
9	IN 7		26	ADD. (2)	
10	IN 8		27	ADD. (1)	
11	IN 9		28	ADD. (COM.)	
12	IN 10		29	N.C.	Non-connection
13	IN 11		30	GND	Grounding
14	IN 12		31	SEND	Transmission indicator output
15	IN 13		32	G	Transmission signal output
16	IN 14		33	D	
17	IN 15		34	0V	Power input
–	–	–	35	+24V	

Notes: 1) In case of connecting DC 2-wire output device to the input, a bleeder resistance R_B may be needed separately between COM. (+) and IN.
2) Pin No.10 to 17 of the **SL-VM8** will be the N.C. pins (non-connected pins).
3) Pin No.28 [ADD. (COM.)] is shorted to pin No.19 to 27 [ADD. (256) to ADD. (1)], and sum total of their address numbers will be the first address.
4) Pin No.34 (0V), pin No.32 (G), pin No.30 (GND), and pin No.28 [ADD. (COM.)] are electrically insulated inside the unit. Do not short these pins.

● Dimensions (Unit: mm)

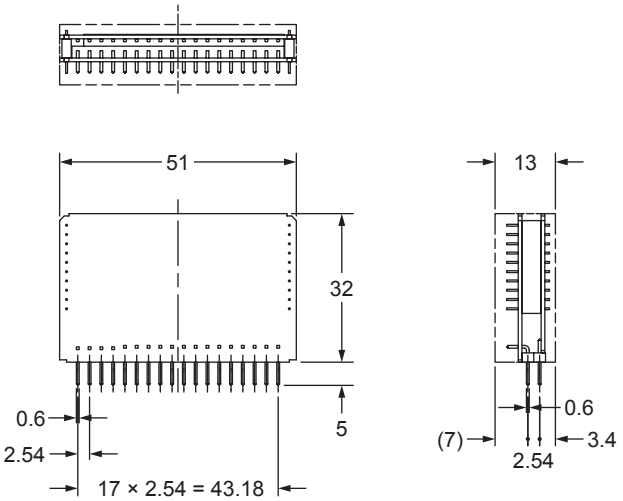

Output module

(**SL-VMP8**: 8-channel, **SL-VMP16**: 16-channel)

● Specifications

Type		8-channel	16-channel
Model No.		**SL-VMP8**	**SL-VMP16**
Supply voltage		24V DC±10% (Supplied from **S-LINK V** controller or separate power supply)	
Current consumption (24V DC)		60mA or less (Note 1)	95mA or less (Note 1)
Address setting		0 to 511 (Set by pins No. 19 to 28)	
Output		NPN open-collector transistor (photo-isolation) • Maximum sink current: 100mA • Applied voltage: 30V DC or less (between output and 0V) • Residual voltage: 1.5V or less (at 100mA sink current) 0.4V or less (at 16mA sink current)	
	Output operation	The output transistor will be turned on if the output signal is sent from the signal transmission line.	
	Short-circuit protection	Incorporated (Note 2)	
Number of output points		8 points	16 points
Environmental resistance	Ambient temperature	-10 to +55°C (No dew condensation or icing allowed), Storage: -20 to +70°C	
	Ambient humidity	35 to 85% RH, Storage: 35 to 85% RH	
	Noise immunity	Power line: 500Vp, 10ms cycle, 1μs pulse width Common: 1,000Vp, 10ms cycle, 1μs pulse width (with noise simulator)	
	Vibration resistance	10 to 150Hz frequency, 0.75mm amplitude or maximum acceleration 49m/s² in X, Y and Z directions for two hours each	
Weight		Approx. 15g	

Notes: 1) This value does not include the current consumption and the output load current of the connected output machine.
2) If one of the output channels is shorted, the short-circuit protective function will be activated to protect all the channels, and outputting signals to the external machine will be stopped. Eliminate the cause of the problem, and the system will be automatically restored.
3) The power supply circuit of this product does not have any short-circuit protective function. Adopt a short-circuit protective function, such as a fuse, for the power supply circuit.
4) In some cases, you cannot install the same **SL-VMP16** units close to each other, or **SL-VMP16** unit and **SL-VM16** unit close to each other. The distance between these units depends on the ambient temperature.
While referring to the following figure, secure enough distance between the units.

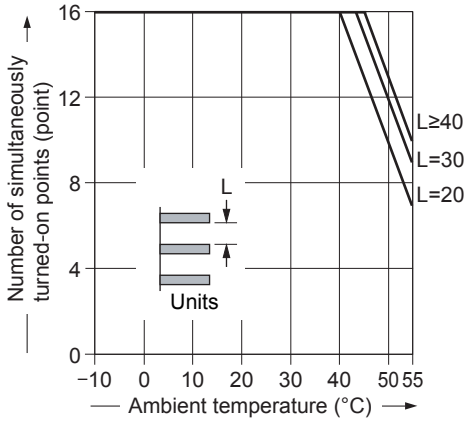

● Output circuit diagram and pin layout drawing

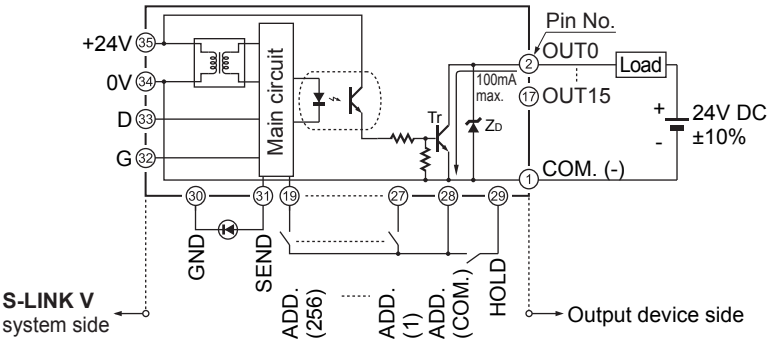

Symbols… Z_D: Surge absorption zener diode
T_r : NPN output transistor

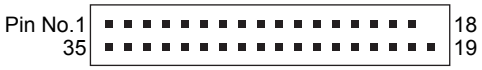

(Bottom view)

Pin No.	Description		Pin No.	Description	
1	COM. (-)	Output common	–	–	–
2	OUT 0	Output (Note 1)	19	ADD. (256)	Address setting input (Note 2)
3	OUT 1		20	ADD. (128)	
4	OUT 2		21	ADD. (64)	
5	OUT 3		22	ADD. (32)	
6	OUT 4		23	ADD. (16)	
7	OUT 5		24	ADD. (8)	
8	OUT 6		25	ADD. (4)	
9	OUT 7		26	ADD. (2)	
10	OUT 8		27	ADD. (1)	
11	OUT 9		28	ADD. (COM.)	
12	OUT 10		29	HOLD	Hold setting input (Note 3)
13	OUT 11		30	GND	Grounding
14	OUT 12		31	SEND	Transmission indicator output
15	OUT 13		32	G	Transmission signal input
16	OUT 14		33	D	
17	OUT 15		34	0V	Power input
18	N.C.	Non-connection	35	+24V	

Notes: 1) Pin No.10 to 17 of the **SL-VMP8** will be the N.C. pins (non-connected pins).
2) Pin No.28 [ADD. (COM.)] is shorted to pin No.19 to 27 [ADD. (256) to ADD. (1)], and sum total of their address numbers will be the first address.
3) Open the line between pin No.29 (HOLD) and pin No.28 [ADD. (COM.)] to set the 'HOLD OFF' mode.
Short this line to set the 'HOLD ON' mode.
4) Pin No.34 (0V), pin No.32 (G), pin No.30 (GND), and pin No.28 [ADD. (COM.)] are electrically insulated inside the unit. Do not short these pins.

● Dimensions (Unit: mm)

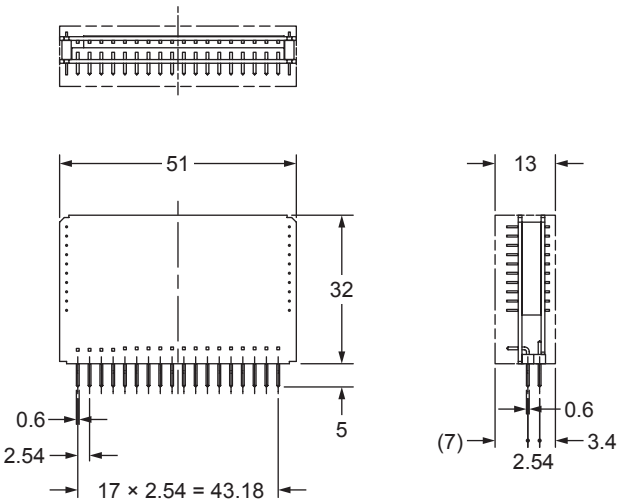

Picking switch

● Part description

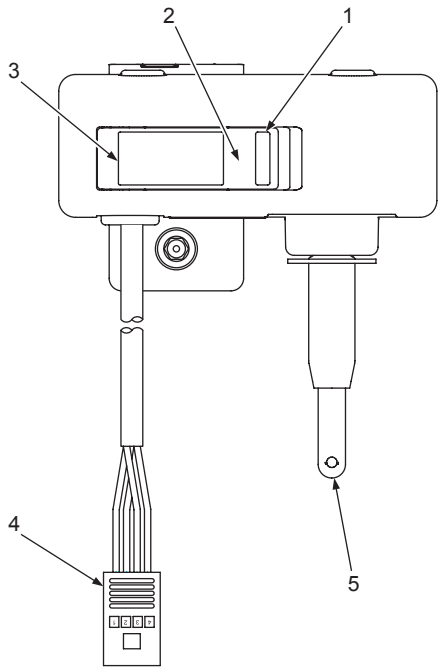

No.	Designation	Function
1	Infrared communication part	Exclusive address setting remote controller **SL-VAR1** (optional) signal transmission and reception department.
2	Transmission indicator (Green)	This indicator will blink when the synchronization signal is sent from the **S-LINK V** controller.
3	Lamp	You can select the LED color (red, green, or blue) or two-stage indication mode. *For a detailed description of two-stage indication mode, refer to page 140.
4	4 pin type snap male connector	An **SL-CP2** is included as a connector to connect the main cable and branch cable of the **S-LINK V**.
5	Lever switch	When the lever switch is tilted 15° or more, the input goes ON.

● Specifications

Designation		Picking switch
Model No.		**SL-VPK01**
Supply voltage		24V DC±10% (supplied from the **S-LINK V** controller or separate power supply)
Current consumption		24V DC line 25mA or less (when lamp is ON)
Transmission specification		Based on **S-LINK V** protocol
Transmission mode		B mode, C mode
Connecting method		Multi-drop connection
Address settings		Input address (lever switch): 0 to 255 Output address (lamp): Select an offset of +32, +64, +128 or +256 for the input address Set with the address setting remote controller **SL-VAR1** (Ver.1.00 or later) (optional).
Input operation		On when the lever switch is tilted 15° or more or when the lever switch is pulled 1.6mm or more vertically (Note 1)
Number of I/O		Lever input: 1 point, Lamp output: 1 point
Lamp		Lamp color (LED): Select from green, red, blue, and green / blue (Note 2). When the output signal from the signal transmission line is ON: Lamp lights up. When the output signal from the signal transmission line is OFF: Lamp turns OFF.
Transmission indicator		Green LED (blinks to indicate the synchronization signal transmission from **S-LINK V** controller)
Environmental resistance	Ambient temperature	0 to +55°C (No dew condensation allowed), Storage: -20 to +60°C
	Ambient humidity	35 to 85% RH, Storage: 35 to 85% RH
	Noise immunity	Power line: 500Vp-p (with noise simulator)
	Voltage withstandability	1,000V AC for one min. between all terminals connected together and enclosure
	Insulation resistance	50MΩ, or more, with 250V DC megger between all terminals connected together and enclosure
	Vibration resistance	10 to 150Hz frequency, 0.75mm in X, Y and Z directions for three times each
	Shock resistance	98m/s^2 acceleration in X, Y and Z directions for three times each
Mounting		Mounted on pipe
Material		Product case: Polycarbonate, Lamp cover: Polycarbonate Rear case: SGMCC (Steel plate treated with high corrosion resistant hot-dip plating) Pipe mouting holder: SPCC (Cold-rolled steel plate)
Cable		0.5mm^2 4-core cabtyre cable, 0.15m long with connector (**SL-CP2**)
Weight		Approx. 200g
Accessory		ø28 pipe mouting holder: 1 pc., Hexagon socket head cop screw for fixing holder [M6 (length: 15mm)]: 1 pc.

NOTE This product cannot be used in mode A (transmission mode).

Notes 1) Pulling load is less than 19.6N. Make sure that stress by forcible bend or pulling is not applied directly to the lever swich.
2) Selecting “green / blue” as the lamp color sets the lamp to two-stage indication mode.

<Two-stage indication mode>

● In two-stage indication mode, the lamp changes from lighting up in green to blinking in blue.

Overview of operation

- When the signal output from the signal transmission line to the lamp address (“output signal”) turns ON, the lamp lights up in green.
- The lever switch input turns ON while the output signal is ON.
- When the output signal turns OFF, the lamp starts blinking in blue.
- When the output signal turns ON once more and then OFF, the lamp stops blinking in blue and turns OFF.

Timing chart

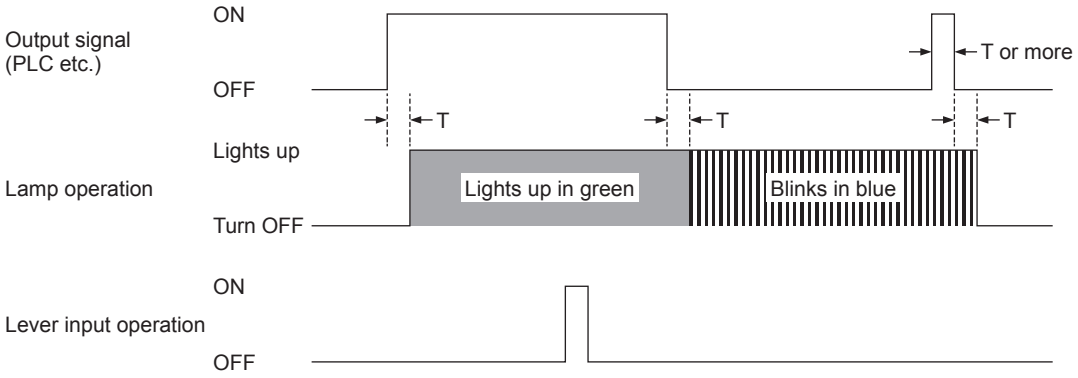

S-LINK V Number of I/O points	Lamp signal T (ms) B mode	Lamp signal T (ms) C mode	S-LINK V Number of I/O points	Lamp signal T (ms) B mode	Lamp signal T (ms) C mode
32	10.84	43.36	288	48.47	193.89
64	15.54	62.18	320	53.18	212.70
96	20.25	80.99	352	57.88	231.52
128	24.95	99.81	384	62.58	250.34
160	29.66	118.62	416	67.29	269.15
192	34.36	137.44	448	71.99	287.97
224	39.06	156.26	480	76.70	306.78
256	43.77	175.07	512	81.40	325.60

● Dimensions (Unit: mm)

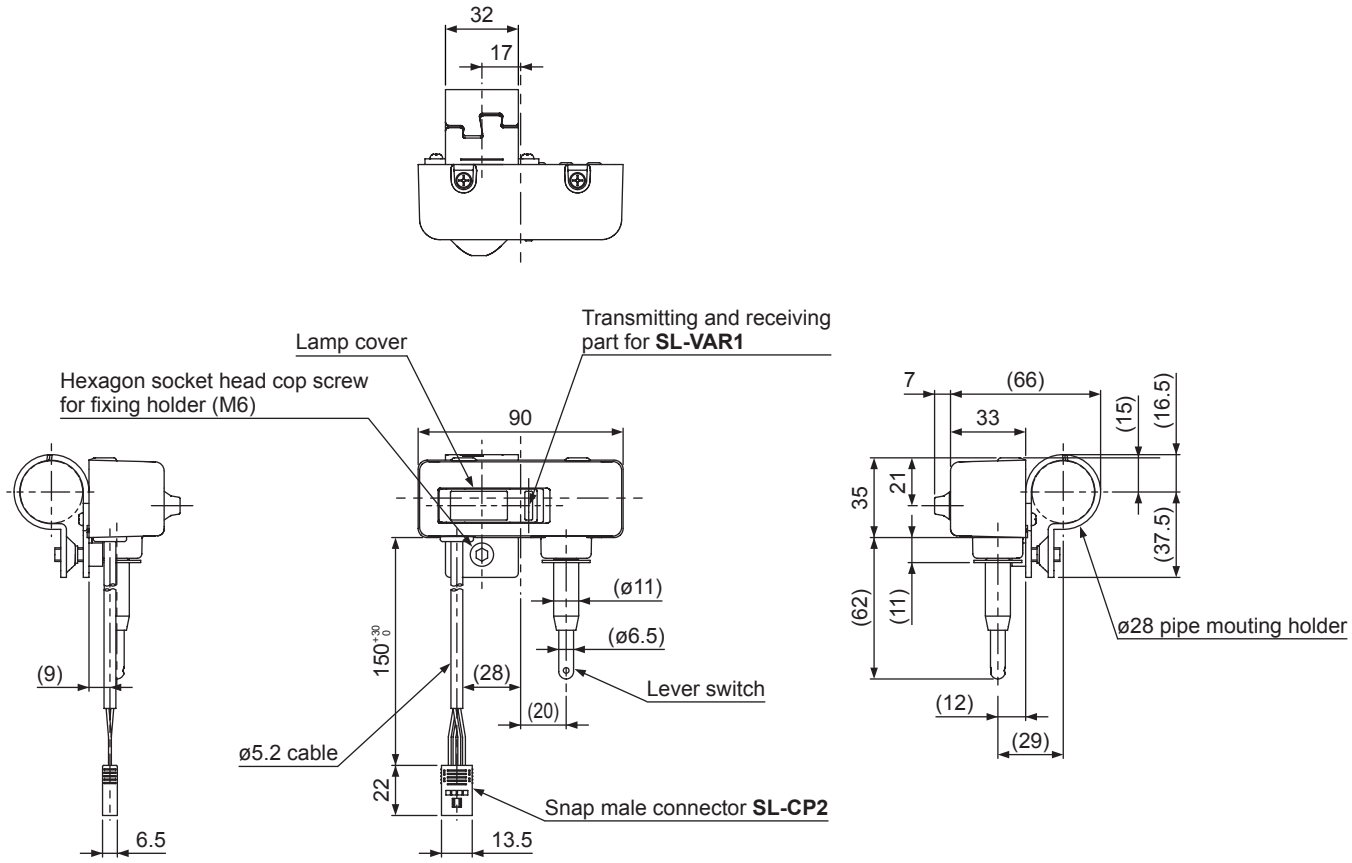

Picking switch for shutter

● Part description

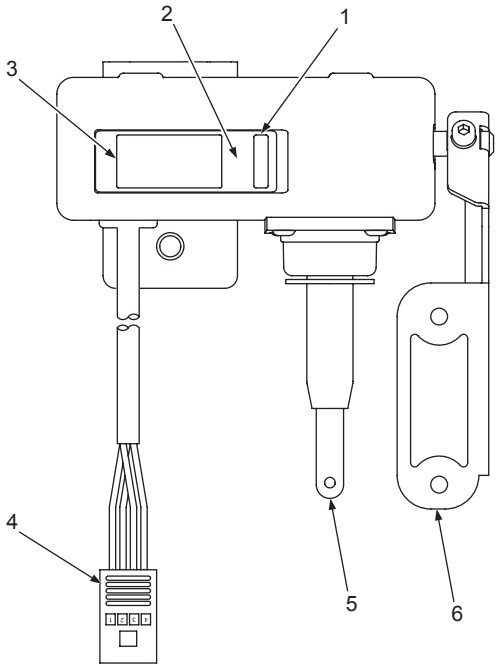

No.	Designation	Function
1	Infrared communication part	Exclusive address setting remote controller **SL-VAR1** (optional) signal transmission and reception department.
2	Transmission indicator (Green)	This indicator will blink when the synchronization signal is sent from the **S-LINK V** controller.
3	Lamp	You can select the LED color (red, green, or blue) or two-stage indication mode. *For a detailed description of two-stage indication mode, refer to page 143.
4	4 pin type snap male connector	An **SL-CP2** is included as a connector to connect the main cable and branch cable of the **S-LINK V**.
5	Lever switch	Operating the lever switch turns the input ON.
6	Movable arm	The arm to which the shutter is attached

● Specifications

Designation		Picking switch for shutter
Model No.		**SL-VPK02**
Supply voltage		24V DC±10% (supplied from the **S-LINK V** controller or separate power supply)
Current consumption		24V DC line 25mA or less (when lamp is ON), Current for shutter operation: 450mA or less
Transmission specification		Based on **S-LINK V** protocol
Transmission mode		B mode, C mode
Connecting method		Multi-drop connection
Address settings		Input address (lever switch): 0 to 255 Output address (lamp, shutter): Select an offset of +32, +64, +128 or +256 for the input address Set with the address setting remote controller **SL-VAR1** (Ver.1.01 or later) (optional).
Input operation		Tilting the lever switch at an angle between 15° and 30° turns the input ON, or pulling the lever switch approx. 2mm or more turns the input ON. (Note 1)
Number of I/O		Lever input: 1 point, Lamp or shutter output: 1 point
Lamp		Lamp color (LED): Select from green, red, blue, and green / blue (Note 2). When the output signal from the signal transmission line is ON: Lamp lights up. When the output signal from the signal transmission line is OFF: Lamp turns OFF.
Transmission indicator		Green LED (blinks to indicate the synchronization signal transmission from **S-LINK V** controller)
Environmental resistance	Ambient temperature	0 to +55°C (No dew condensation allowed), Storage: -20 to +60°C
	Ambient humidity	35 to 85% RH, Storage: 35 to 85% RH
	Noise immunity	Power line: 500Vp-p (with noise simulator)
	Voltage withstandability	500V AC for one min. between all terminals connected together and enclosure
	Insulation resistance	50MΩ, or more, with 250V DC megger between all terminals connected together and enclosure
	Vibration resistance	10 to 150Hz frequency, 0.75mm in X, Y and Z directions for three times each
	Shock resistance	98m/s^2 acceleration in X, Y and Z directions for three times each
Mounting		Mounted on pipe
Material		Front cover: Polycarbonate, Lamp cover: Polycarbonate, Rear case: ABS, Pipe mouting holder :SPCC Driving shaft: SUM, Arm: SPCC
Cable		0.5mm^2 4-core cabtyre cable, 0.15m long with connector (**SL-CP2**)
Weight		Approx. 250g
Accessory		ø28 Pipe mounting holder: 1 pc., Arm plate: 1 pc., Plate-fixing screws [M4(length: 12mm)]: 2 pcs. Plate-fixing spring washer: 2 pcs., Holder-fixing socket head hex bolt [M6 (length: 15mm)]: 1 pc.

NOTE This product cannot be used in mode A (transmission mode).

Notes 1) Pulling load is less than 19.6N. Make sure that stress by forcible bend or pulling is not applied directly to the lever swich.
2) Selecting “green / blue” as the lamp color sets the lamp to two-stage indication mode.

<Two-stage indication mode>

● In two-stage indication mode, the lamp changes from lighting up in green to blinking in blue.

Overview of operation

- When the signal output from the signal transmission line to the lamp address (“output signal”) turns ON, the lamp lights up in green.
- The lever switch input turns ON while the output signal is ON.
- When the output signal turns OFF, the lamp starts blinking in blue.
- When the output signal turns ON once more and then OFF, the lamp stops blinking in blue and turns OFF.

Timing chart

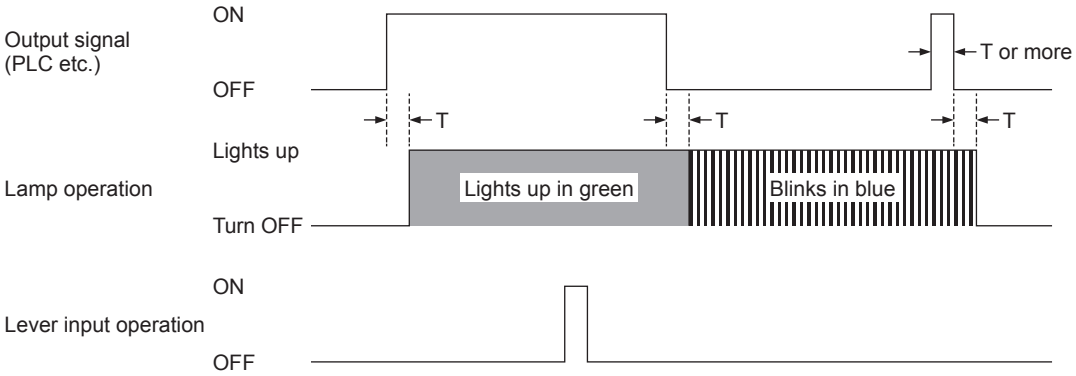

S-LINK V Number of I/O points	Lamp signal T (ms) B mode	Lamp signal T (ms) C mode	S-LINK V Number of I/O points	Lamp signal T (ms) B mode	Lamp signal T (ms) C mode
32	5.42	21.68	288	24.24	96.94
64	7.77	31.09	320	26.59	106.35
96	10.12	40.50	352	28.94	115.76
128	12.48	49.90	384	31.29	125.17
160	14.83	59.31	416	33.64	134.58
192	17.18	68.72	448	36.00	143.98
224	19.53	78.13	480	38.35	153.39
256	21.88	87.54	512	40.70	162.80

● Dimensions (Unit: mm)

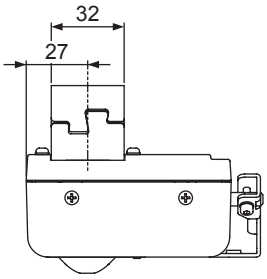

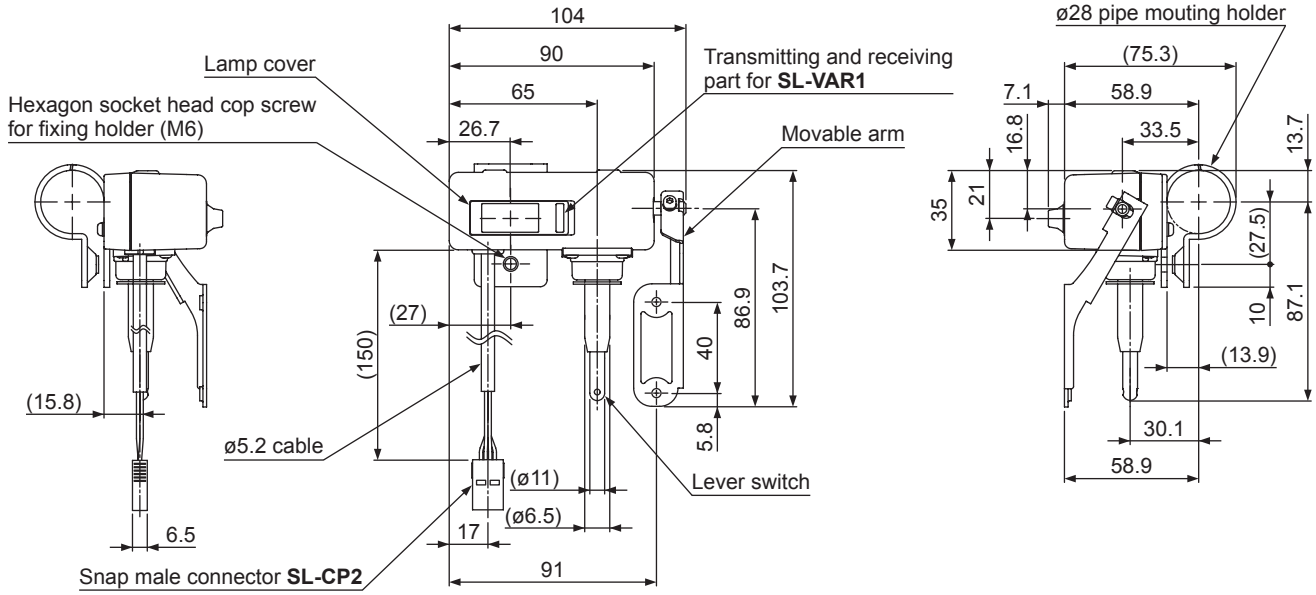

Address setting remote controller

● Part description

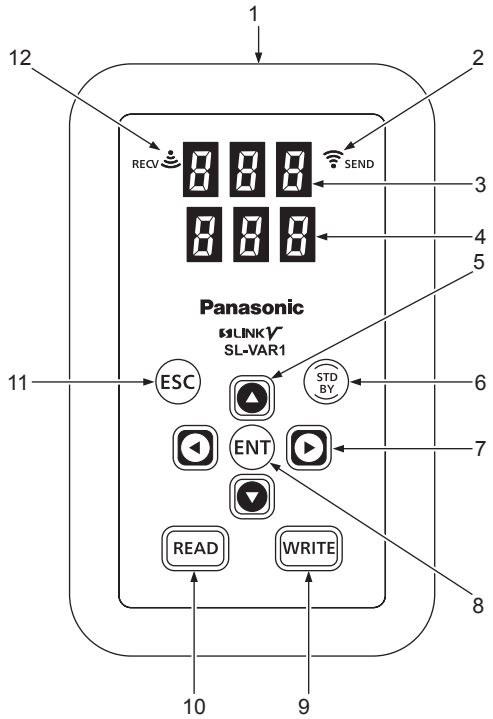

No.	Designation	Function
1	Infrared communication part	The light emitting and receiving part for infrared communication. (Position the infrared communication part so that it faces the picking switch **SL-VPK0**□ at a distance of 100mm or less.)
2	SEND indicator (Red)	Blinks at the time of signal transmission.
3	Setting item display (Yellow)	Displays the setting mode in 7 segments.
4	Setting contents display (Red)	Displays the setting contents in 7 segments.
5	UP / DOWN key	Adjustment key for setting input.
6	STD BY key	Power key. Pressing this key will change between ON / OFF.
7	LEFT / RIGHT key	Setting mode and input digit change key.
8	ENTER key	Determines the setting contents.
9	WRITE key	Writes the settings made with the remote controller to the **SL-VPK0**□.
10	READ key	Loads the picking switch **SL-VPK0**□ settings.
11	ESCAPE key	Press this key to delete the set contents.
12	RECV key	Blinks when a signal is being received.

● Specifications

Designation		Address setting remote controller
Model No.		**SL-VAR1**
Version		Ver.101
Compatible model		**SL-VPK01**, **SL-VPK02**
Power supply		AAA alkaline batteries: 2 pcs
Battery life		24 hours continuous use (Ambient temperature: +25°C)
Auto sleep		Incorporated (3 minutes)
Transmission method		Infrared (using the Association for Electric Home Appliances format)
Emitting element		Infrared LED (940nm)
Receiving element		Remote controller sensor module
Subcarrier frequency		36.7kHz
Setting distance		100mm or less
Setting name display		7 segments yellow LED
Setting content display		7 segments red LED
SEND indicator		Red LED (Blinks at the time of signal transmission.)
RECV indicator		Green LED (Blinks when a signal is being received.)
Setting mode		• Selected model: **SL-VPK01**, **SL-VPK02** • Input address setting: 0 to 255 • Address off set: +32, +64, +128, +256 • Lamp color selection: Sets the lamp display color. • Shutter opening angle (**SL-VPK02** only) • Shutter closing angle (**SL-VPK02** only) • Shutter closing delay (**SL-VPK02** only) • Default reset: Resets settings to the factory defaults.
Environmental resistance	Protection	IP20
	Ambient temperature	+5 to +45°C (No dew condensation), Storage: 0 to +55°C
	Ambient humidity	35 to 85% RH, Storage: 35 to 85% RH
Material		Product case: ABS, Operation Panel: Polycarbonate, Communication window cover: Polycarbonate Silicone Cover: Silicone, Mounting clips: Nylon, Key Ring: SWRM6
Weight		Approx. 160g

● Dimensions (Unit: mm)

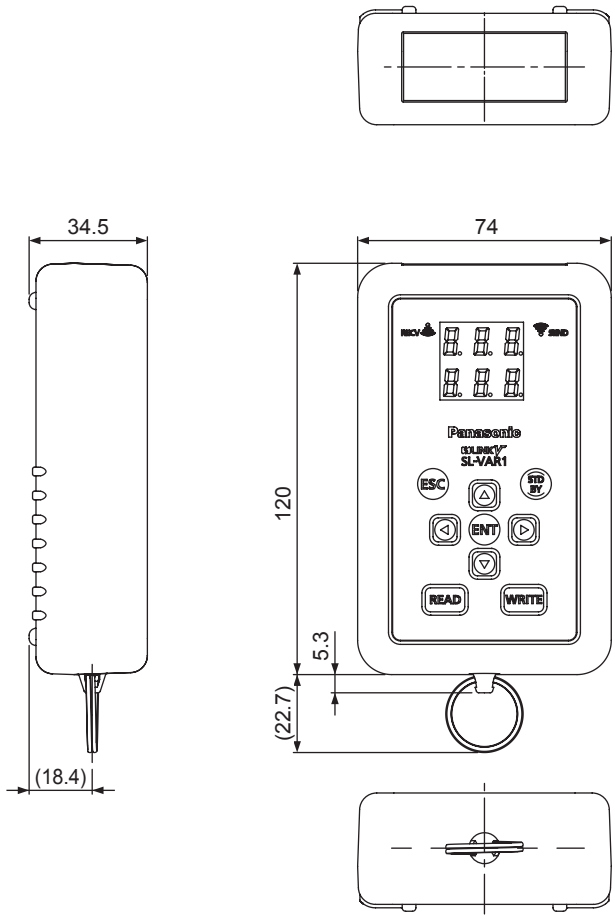

End unit

Each unit of the **S-LINK V** system needs at least one end unit.

● Part description

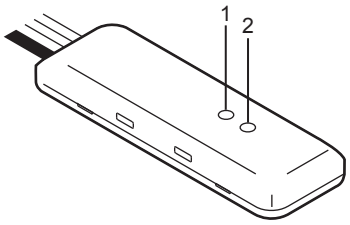

No.	Designation	Function
1	Power indicator (Green)	This indicator will light up when the power is supplied.
2	Signal line connection indicator (Orange)	This indicator will light up when the signal waveform is confirmed.

● Specifications

Designation		End Unit
Model No.		**SL-VEU**
Supply voltage		24V DC±10%
Current consumption		10mA or less
Power indicator		Green LED (lights up when the power is supplied)
Signal line connection indicator		Orange LED (lights up when the signal waveform is confirmed)
Environmental resistance	Ambient temperature	-10 to +55°C (No dew condensation or icing allowed), Storage: -20 to +70°C
	Ambient humidity	35 to 85% RH, Storage: 35 to 85% RH
	Noise immunity	Power line: 500Vp, 10ms cycle, 1μs pulse width Common: 1,000Vp, 10ms cycle, 1μs pulse width (with noise simulator)
	Voltage withstandability	1,000V AC for one min. between all terminals connected together and enclosure
	Insulation resistance	20MΩ, or more, with 500V DC megger between all terminals connected together and enclosure
	Vibration resistance	10 to 150Hz frequency, 0.75mm amplitude or maximum acceleration 49m/s² in X, Y and Z directions for two hours each
	Shock resistance	490m/s^2 acceleration (approx. 50G) in X, Y and Z directions for three times each
Mounting		Mounted on DIN rail or by tightening screws (Using **MS-CH**)
Tightening torque		**MS-CH**: 1.2N·m or less
Material		Enclosure: Polycarbonate, DIN rail mounting holder: ABS
Cable		0.5mm^2 4-core flat cable, 0.6m long
Weight		Approx. 45g (including **MS-CH**)
Accessory		**MS-CH** (DIN rail mounting holder): 1 pc.

Note: If this product is stored in the control panel together with the other units, the temperature may rise above the specified operation temperature due to the heat generated by the other units.
In this case, install a cooling fan, etc. so that the ambient temperature can be in the specified range.

● Dimensions (Unit: mm)

<SL-VEU>

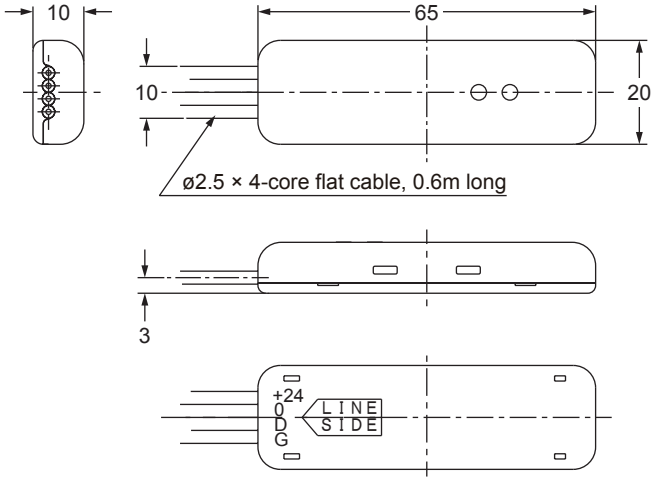

<MS-CH>

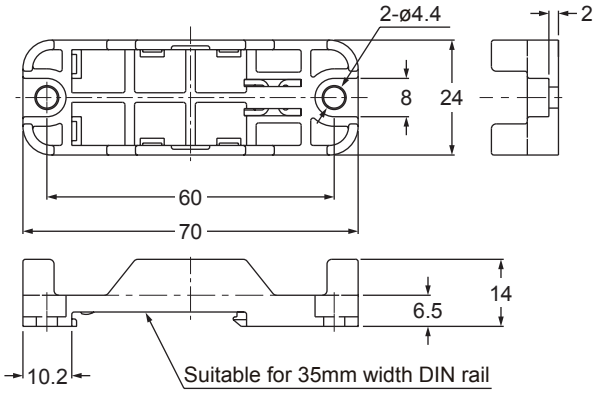

Handy monitor

> NOTE
> For a detailed description of the handy monitor (**SL-VHM1**), refer to the '**Handy Monitor (SL-VHM1) Instrunction Manual**.'

● Part description

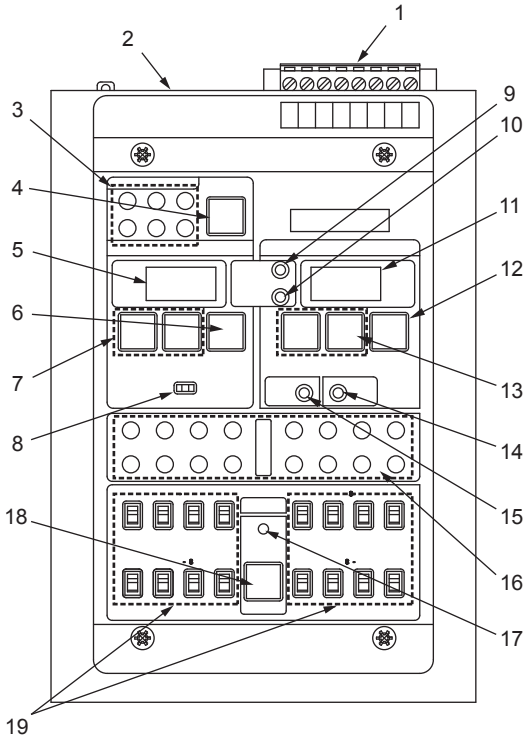

No.	Designation		Function	
1	**S-LINK V** terminal block connector		1: F.G.	Receives +24V, 0V, and F.G. from the external power supply unit, and supplies +24V, 0V, D, and G to the I/O units. In addition, the error output signal is output to the external device.
			2: 24V	
			3: 0V	
			4: +24V	
			5: 0V	
			6: D	
			7: 0V	
			8: ERR	
2	Operation mode selector switch (power switch)		Selects the master mode, power-off mode, or slave mode.	
3	Error indicator × 6 (Red)		Lights up when an error occurs in the master mode, blinks when the error is canceled (turns off when the ERROR CLEAR key is pressed).	
4	ERROR CLEAR key		After occurrence of an error, if the error indicator (red) starts blinking (the cause of the error is eliminated), press this key. The error indicator will light off.	
5	CONTROL side	Address display (Red)	The displayed item depends on the mode (‘RUN,’ ‘CHECK’, or ‘CONFIG’ mode). Use the mode selector switch to switch the mode. **<RUN mode>** • Each transmission mode (3 modes in total) will be indicated by the following character, and the LED of each character will sequentially light up just like rotating clockwise. A Mode B Mode C Mode • If an error occurs, the error message will appear. **<CHECK mode>** • The number of connected nodes will be displayed first. After that, each time you press the SELECT key, the recognized addresses will be displayed one after another. Number of connected nodes: Using the decimal or hexadecimal number, the number of I/O units will be displayed. Address: Using the decimal or hexadecimal number, the addresses of the I/O units will be displayed sequentially. Note: In the hexadecimal number display mode, the hexadecimal number indicator (orange) will light up. **<CONFIG mode>** • Settings will be displayed sequentially. To switch the displayed setting, use the SELECT key. • When the RUN mode is switched to the CONFIG mode, different item will be displayed compared with the displayed item just after power-on.	
6		ENTER key	Press the ENTER key to determine the set condition value. In the system setting mode, press and hold the ENTER key for 3 seconds or more. The system will be set.	
7		SELECT keys	Use these keys to switch the displayed item or set item. Also use these keys to change the set condition value.	
8		Mode selector switch	Switches the mode (‘RUN,’ ‘CHECK’, or ‘CONFIG’ mode).	
9	Hexadecimal number display mode indicator (Orange)		Indicates the current display mode of the address display. • ON: The hexadecimal number display mode is selected. • OFF: The decimal number display mode is selected.	
10	Transmission mode indicator (Green)		This indicator will blink during transmission (when the transmission signal is being output). The indicator blinking cycle depends on the transmission speed.	
11	ADDRESS SET side	Address display (Red)	Displays the input address or the output address.	
12		ENTER key	Starts setting an address or determines an address. You can also use this key to change the displayed address.	
13		SELECT keys	Use these keys to set address values or to change the displayed address.	
14		Input address indicator (Green)	Lights up when the address display on the ADDRESS SET side displays the input address.	
15		Output address indicator (Orange)	Lights up when the address display on the ADDRESS SET side displays the output address.	
16	Data monitor indicator (Orange)		Lights up when signals of 16 specified output addresses (the first address is specified) are turned ON.	
17	Data input validity indicator (Green)		Lights up when data input is valid (if data input using the data input switch is possible.)	
18	Data input VALID / INVALID selector key		Switches the data input mode to ‘VALID’ or ‘INVALID.’ Press and hold this switch for 1 second or more to switch the data input mode.	
19	Data input switches		Inputs data by inputting 16 addresses of signals to the **S-LINK V** system.	

● Specifications

Designation		Handy monitor
Model No.		**SL-VHM1**
Supply voltage		24V DC $^{+10}_{-5}$%
Current consumption		500mA or less (excluding the connected unit drive power)
Allowable passing current		7A or less
Number of connectable units		1 unit for 1 system (common to both master mode and slave mode)
Operation mode		Master mode and slave mode (Selected by mode selector switch) Master mode: Controller function + I/O test function Slave mode: I/O test function
Transmission mode indicator		Green LED (blinks when synchronization signal is input)
Hexadecimal number indicator		Orange LED (lights up when the address display is in the hexadecimal number display mode)
Control function	Setting and operation	For setting and operation, use the address display on the CONTROL side, RUN / CHECK / CONFIG mode selector switch on the CONTROL side, SELECT keys (2 types) on the CONTROL side, and the ENTER key on the CONTROL side.
	Address display on CONTROL side	3 digit red LED (displays the number of connected nodes, recognized address, error address, etc.)
	Error indicator	Red LED × 6 [lights up when an error occurs, blinks when the error is canceled. (turns off when the ERROR CLEAR key is pressed.)]
	ERROR CLEAR key	Push-button type
	Error output	When an error occurs: Hi (24V) When the error is canceled or when normal transmission is performed: Lo (0V) • Maximum sink current: 100mA • Residual current: 1.5V or less (at 100mA sink current)
I/O test function	Number of I/O points	16 input points, 16 output points
	Address setting	For address setting, use the address display on the ADDRESS SET side, SELECT keys (2 types) on the ADDRESS SET side, and ENTER key on the ADDRESS SET side.
	Address display on ADDRESS SET side	3 digit red LED (displays the set address during address setting operation)
	Input address indicator	Green LED (lights up when the address display area displays the input address)
	Output address indicator	Orange LED (lights up when the address display area displays the output address)
	Data monitor indicator	Orange LED × 16 [lights up when signals of 16 specified output addresses (the first address is specified) are turned ON.]
	Data input validity indicator	Green LED (Lights up when data input is valid)
	Data input VALID / INVALID selector key	Push-button type
	Data input switch	Lever switch × 16 incorporated Using the data input VALID / INVALID selector key and the data input validity indicator, set the data input mode to VALID or INVALID.
Environmental resistance	Ambient temperature	0 to +55ºC (No dew condensation), Storage: -20 to +75ºC
	Ambient humidity	35 to 85% RH, Storage: 35 to 85% RH
	Noise immunity	Power line: 500Vp, 10ms cycle, 1μs pulse width (with noise simulator)
	Vibration resistance	10 to 150Hz frequency, 0.75mm amplitude or maximum acceleration 49m/s² in X, Y and Z directions for two hours each
	Shock resistance	294m/s^2 acceleration (30G approx.) in X, Y and Z directions for three times each
Weight		Approx. 380g
Accessory		Strap: 1 pc.

● Terminal layout drawing

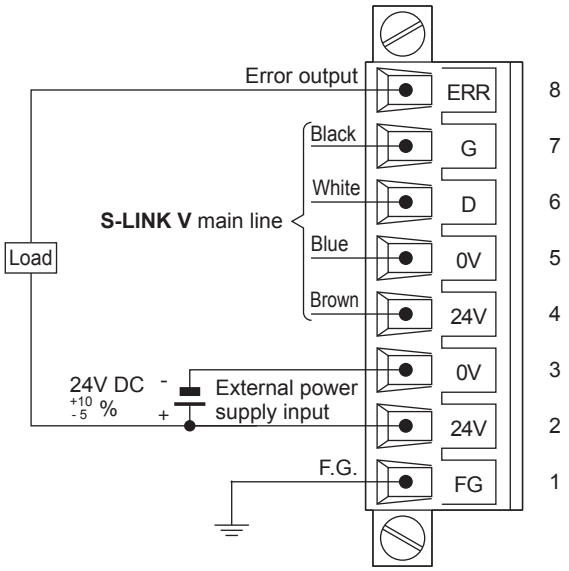

Notes: 1) Before starting wiring work, be sure to turn off the power.
If you start wiring work without turning off the power, the **S-LINK V** controller and the **SL-VHM1** may malfunction.
2) To use the **SL-VHM1** in the master mode, be sure to disconnect the other **S-LINK V** controllers from the main line.
3) To use the **SL-VHM1** in the slave mode, do not connect the power to the **SL-VHM1**.

● Dimensions (Unit: mm)

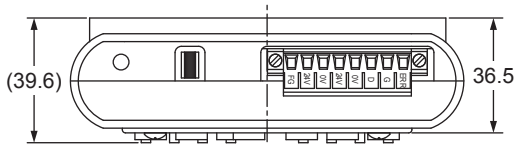

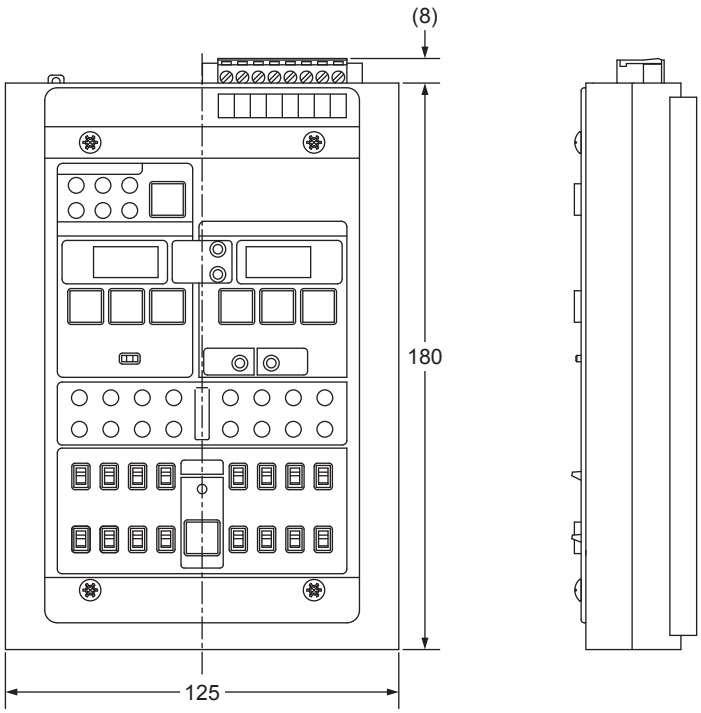

Cable

Type	Model No.	Cable length	Conductor cross section	Conductor resistance	Allowable passing current
Exclusive 4-core flat cable	**SL-RCM100□**	100m	0.5mm^2	Approx. 0.04Ω/m	7A or less (At ambient temperature of 25°C)
	SL-RCM200	200m			

Hook-up connector

⚠ CAUTION

The **SL-J□** connector can be used for the exclusive 4-core flat cable only.
To use the other cabtyre cable (commercially available), be sure to use the junction connector commercially available.

Use the **SL-J□** to connect or branch the exclusive 4-core flat cables.

Designation	Model No.	Applicable cable	Conductor cross section	Allowable passing current	Allowable voltage	Exclusive pliers
Hook-up connector	**SL-J1A**	Exclusive 4-core flat cable	0.5mm^2 to 0.5mm^2	7A or less (At ambient temperature of 25°C)	30V DC or less	**SL-JPS**
Hook-up connector for cable extension	**SL-J3A**					
Hook-up connector for cable end	**SL-JK**		0.5mm^2	1A or less when **SL-CP1** is used 2A or less when **SL-CP2** is used 3A or less when **SL-CP3** is used		
Hook-up connector for 'T' - branch	**SL-JK1**					
Snap male connector	**SL-CP1**	Applicable lead wire sheath material: Vinyl chloride or soft polyethylene Applicable lead wire diameter: ø0.7 to ø1.2mm	0.08 to 0.2mm^2 (AWG28 to AWG24)	1A or less		**SL-JPC**
	SL-CP2	Applicable lead wire sheath material: Vinyl chloride or soft polyethylene Applicable lead wire diameter: ø1.1 to ø1.6mm	0.3mm^2 (AWG22)	2A or less		
	SL-CP3	Applicable lead wire sheath material: Vinyl chloride or soft polyethylene Applicable lead wire diameter: ø1.7 to ø2.5mm	0.5mm^2 (AWG20)	3A or less		**SL-JPE**
Snap female connector	**SL-CJ1**	Applicable lead wire sheath material: Vinyl chloride or soft polyethylene Applicable lead wire diameter: ø0.7 to ø1.2mm	0.08 to 0.2mm^2 (AWG28 to AWG24)	1A or less		**SL-JPC**
	SL-CJ2	Applicable lead wire sheath material: Vinyl chloride or soft polyethylene Applicable lead wire diameter: ø1.1 to ø1.6mm	0.3mm^2 (AWG22)	2A or less		

● Dimensions (Unit: mm)

<SL-J1A>

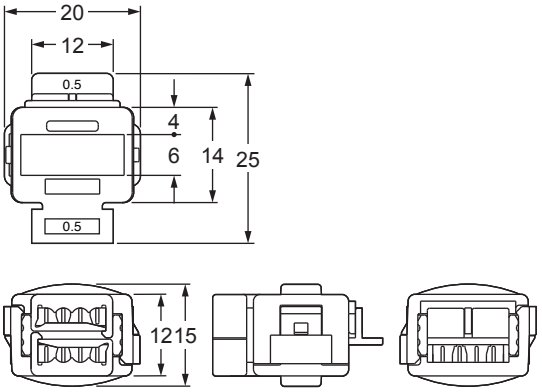

<SL-J3A>

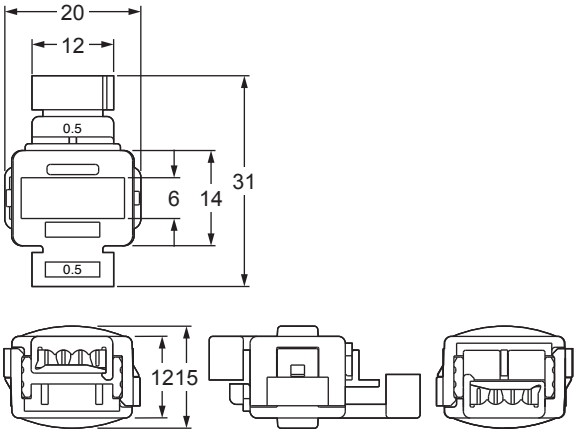

<SL-JK, SL-JK1>

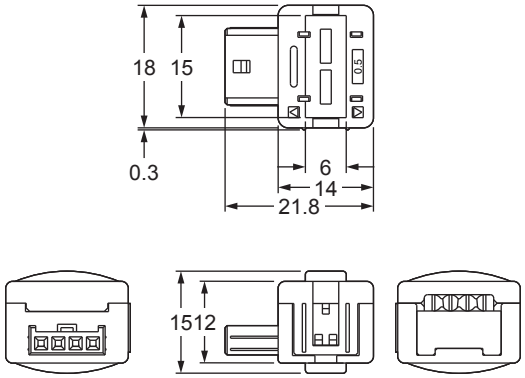

<SL-CP1, SL-CP2>

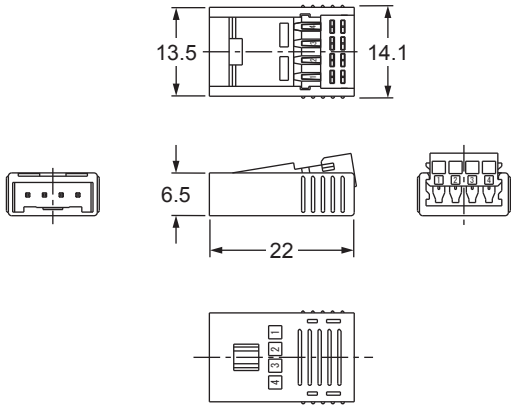

<SL-CP3>

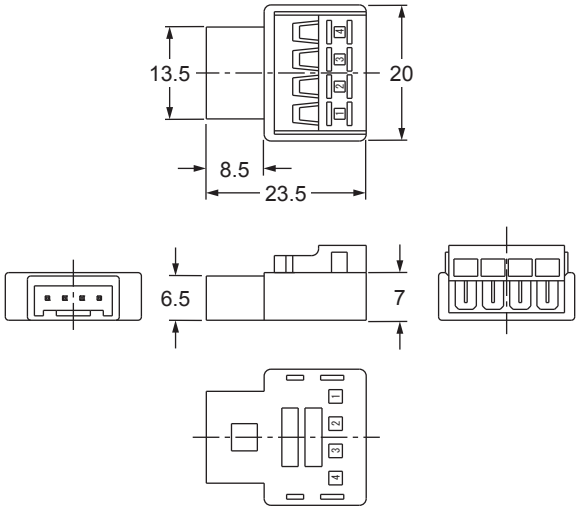

<SL-CJ1, SL-CJ2>

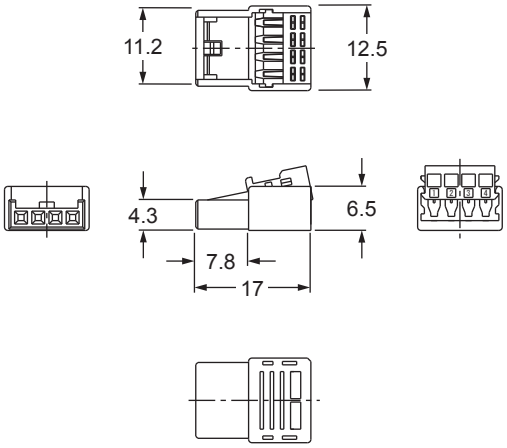

List of programmable logic controllers (PLC) (upper models)

This section shows the list of programmable logic controllers (PLC) and their manufacturers in order to clarify the programmable controllers that can control each unit of the **S-LINK V** system.

⚠ CAUTION

Select PLC I/O connector compatible with your PLC.
Use of a wrong PLC I/O connector may damage the system.

<PLC input connectors>

Model No.	Applicable manufacturer	Applicable PLC	Applicable input module
SL-VS1	Panasonic Industrial Devices SUNX Co., Ltd.	FPΣ (excluding FPG-C32T)	FPG-XY64D2T (X side)
		FP2	FP2-X32D2
		FP7	AFP7X32D2
		FP3, FP10S, FP10SH	AFP33027-F
	Toshiba Machine Co., Ltd.	TC200	TC64DI
SL-VS2	Fuji Electric FA Components & Systems Co., Ltd.	NS series	NS-X64-1
			NS-XY64-1 (X side)
		F55	NV1X3204
			NV1X3204-W
			NV1X3206
		F70	NC1X3204
			NC1X3204-3
			NC1X3206
			NC1X6404
			NC1X6406
			NC1W6406T (X side)
		F80H, F120H, F120S, F140S, F15XS	FTU125A
			FTU126A
			FTU127C
			FTU612A (X side)
SL-VS3	Mitsubishi Electric Corp.	AnS	A1SX41
			A1SX41-S1
			A1SX42
			A1SX42-S1
			A1SH42 (X side)
			A1SH42-S1 (X side)
		AnN, AnA, AnU, QnA, QnAs	AX42
			AH42 (X side)
		Q series	QX41
			QX42
			QH42P (X side)
		A2CJ	AJ35TC1-32D
	Fuji Electric FA Components & Systems Co., Ltd.	SX series	NP1X3206-W
			NP1X6406-W
SL-VS4	Sharp Manufacturing Systems Corp.	JW20, JW20H, JW30H	JW-234N
			JW-264N
		JW50H	JW-34NC
			JW-64NC
SL-VS5	OMRON Corp.	CJ1 series	CJ1W-ID231
			CJ1W-ID261
			CJ1W-MD261 (X side)
		CS1	CS1W-ID231
			CS1W-ID261
			CS1W-MD261 (X side)
		CVM1, CV, C500, C1000H, C2000H	C500-ID219
		C200H series	C200H-ID216
			C200H-ID217
		CQM1	CQM1-ID213
	Yokogawa Electric Corp.	FA500	XD64-6N
			WD64-6N (X side)
		FA-M3, FA-M3R	F3XD32-3N
			F3XD64-3N

Note: The **SL-VS1** is MIL connector (40-pin connector) conforming to the MIL specifications.
The other connectors are the 360-type 40-pin connectors manufactured by Fujitsu Component Ltd.

List of Models

Model No.	Applicable manufacturer	Applicable PLC	Applicable input module
SL-VS5	Hitachi Ltd.	EH-150 series	EH-XD32
	TOSHIBA Corp.	T3	DI-335
			DI-335H
SL-VS6	Hitachi Industrial Equipment Systems Co., Ltd.	H series	XDC24D2H
			XDC24D3H
SL-VS7	YASKAWA Electric Corp.	GL20, GL40S, GL60S, GL60H, GL70H	B2605
SL-VS8	Rockwell Automation Japan (Allen-Bradley)	SLC500	1746-IV32

Note: The **SL-VS6** and **SL-VS8** are MIL connectors (40-pin connectors) conforming to the MIL specifications.
The other connectors are the 360-type 40-pin connectors manufactured by Fujitsu Component Ltd.

<PLC output connectors>

Model No.	Applicable manufacturer	Applicable PLC	Applicable output module
SL-VP1	Panasonic Industrial Devices SUNX Co., Ltd.	FPΣ (excluding FPG-C32T)	FPG-XY64D2T (Y side)
		FP2	FP2-Y32T
		FP7	AFP7Y32T
		FP3, FP10S, FP10SH	AFP33487-F
	Toshiba Machine Co., Ltd.	TC200	TC64DON
SL-VP2	Fuji Electric FA Components & Systems Co., Ltd.	NS series	NS-Y64-T1
			NS-XY64-1 (Y side)
		F55	NV1Y32T05P1
		F70	NC1Y32T05P1
			NC1Y64T05P1-1
			NC1W6406T (Y side)
		F80H, F120H, F120S, F140S, F15XS	FTU222A
			FTU227C
			FTU612A (Y side)
SL-VP3	Mitsubishi Electric Corp.	AnS	A1SY41
			A1SY42
			A1SH42 (Y side)
			A1SH42-S1 (Y side)
		AnN, AnA, AnU, QnA, QnAs	AY42
			AH42 (Y side)
		Q series	QY41P
			QY42P
			QH42P (Y side)
		A2CJ	AJ35TC1-32T
	Fuji Electric FA Components & Systems Co., Ltd.	SX series	NP1Y32T09P1
			NP1Y64T09P1
SL-VP4	Sharp Manufacturing Systems Corp.	JW20, JW20H, JW30H	JW-232S
			JW-262S
		JW50H	JW-32SC
			JW-62SC
SL-VP5	OMRON Corp.	CJ1 series	CJ1W-OD231
			CJ1W-OD261
			CJ1W-MD261 (Y side)
		CS1	CS1W-OD231
			CS1W-OD261
			CS1W-MD261 (Y side)
		CVM1, CV, C500, C1000H, C2000H	C500-OD213
		C200H series	C200H-OD218
			C200H-OD219
		CQM1	CQM1-OD213
	Yokogawa Electric Corp.	FA500	YD64-1A
			WD64-6N (Y side)
		FA-M3, FA-M3R	F3YD32-1A
			F3YD64-1A
	Hitachi Ltd.	EH-150 series	EH-YT32
	TOSHIBA Corp.	T3	DO-335
	YASKAWA Electric Corp.	GL20, GL40S, GL60S, GL60H, GL70H	B2604
SL-VP6	Hitachi Industrial Equipment Systems Co., Ltd.	H series	YTR24DH
			YTR24D3H
SL-VP8	Rockwell Automation Japan (Allen-Bradley)	SLC500	1746-OV32

Note: The **SL-VP1**, **SL-VP6**, and **SL-VP8** are MIL connectors (40-pin connectors) conforming to the MIL specifications.
The other connectors are the 360-type 40-pin connectors manufactured by Fujitsu Component Ltd.

Controller

Designation	Model No.	Description
S-LINK V controller	**SL-VCU1**	This controller controls the signal transmission of the entire system. In addition, this controller always monitors the signal transmission line. If a problem, such as disconnection, is detected, the controller will localize the problem point, and displays the error address.
Bus direct-connection type **S-LINK V** controller for **FP2** / **FP2SH** series	**SL-VFP2**	This controller can be directly connected to the bus line of the **FP2** series.
Bus direct-connection type **S-LINK V** controller for MELSEC-Q series PLC manufactured by Mitsubishi Electric Corp.	**SL-VMEL-Q**	This controller can be directly connected to the bus line of the MELSEC-Q series PLC manufactured by Mitsubishi Electric Corp.
S-LINK V gateway controller for CC-Link	**SL-VGU1-C**	This **S-LINK V** gateway controller conforms to the specifications of the CC-Link open network proposed by CC-Link Association.
S-LINK V gateway controller for DeviceNet	**SL-VGU1-D**	This **S-LINK V** gateway controller conforms to the specifications of the DeviceNet open network proposed by ODVA.
S-LINK V gateway controller for EtherCAT	**SL-VGU1-EC**	This **S-LINK V** gateway controller conforms to the specifications of the EtherCAT open network proposed by ETG.
S-LINK V gateway controller for RS-485 / RS-232C	**SL-VGU1-485**	This **S-LINK V** gateway controller conforms to the specifications of the RS-485 / RS-232C.

Control board

Designation	Model No.	Description
S-LINK V control board for PCI bus	**SL-VPCI**	Insert this control board into the extension slot (PCI bus) of the personal computer to control the **S-LINK V** system.
S-LINK V control board for VME bus	**SL-VVMES2**	This control board is directly connected to the VME bus line to control the **S-LINK V** system. Since this control board is incorporated with 2 ports (512 points, each) for I/O machines, use of this control board enables control of up to 1,024 points of I/O devices.

Control module

Designation	Model No.	Description
S-LINK V control module	**SL-VMC1**	This is a hybrid IC module. The **S-LINK V** controller is mounted on the printed circuit board. This module enables free designing of the system.

List of I/O units

Designation		Model No.	Description	
I/O unit	1-channel input unit	**SL-VCH10**	Input: 1 point	Enables connection of 1 point of the input device.
	2-channel input unit	**SL-VCH20**	Input: 2 points	Enables connection of 2 points of the input device.
	2-channel I/O mixed unit	**SL-VCH21**	Input: 1 point Output: 1 point	Enables connection of 1 point of the input device and 1 point of the output device.
	1-channel output unit	**SL-VCH11**	Output: 1 point	Enables connection of 1 point of the output device.
	2-channel output unit	**SL-VCH22**	Output: 2 points	Enables connection of 2 points of the output device.
I/O terminal	4-channel input terminal	**SL-VTB4**	Input: 4 points	These terminals enable connection of 4 points, 8 points, 16 points, or 32 points of the input device. Since a power supply terminal for the input device is installed for every 2 channels, simple wiring will be possible (excluding the **SL-VTB32**).
	8-channel input terminal	**SL-VTB8**	Input: 8 points	
	16-channel input terminal	**SL-VTB16**	Input: 16 points	
	32-channel input terminal	**SL-VTB32**	Input: 32 points	
	4-channel output terminal	**SL-VTBP4**	Output: 4 points	These terminals enable connection of 4 points, 8 points, 16 points, or 32 points of the output device. In addition, the output holding function is adopted for these terminals. For this reason, if the signal transmission line has a problem, the output conditions just before occurrence of the problem will be held.
	8-channel output terminal	**SL-VTBP8**	Output: 8 points	
	16-channel output terminal	**SL-VTBP16**	Output: 16 points	
	32-channel output terminal	**SL-VTBP32**	Output: 32 points	
Connector I/O unit	4-channel connector input unit	**SL-VT4J**	Input: 4 points	Using the snap male connector (**SL-CP**□), up to 4 points or 8 points of the input device can be easily connected.
	8-channel connector input unit	**SL-VT8J**	Input: 8 points	
	4-channel e-CON type connector input unit	**SL-VT4E**	Output: 4 points	Using the e-CON compliant connector, up to 4 points or 8 points of the input device can be easily connected.
	8-channel e-CON type connector input unit	**SL-VT8E**	Output: 8 points	
	4-channel connector output unit	**SL-VTP4J**	Output: 4 points	Using the snap male connector (**SL-CP**□), up to 4 points or 8 points of the output device can be easily connected. For this reason, if the signal transmission line has a problem, the output conditions just before occurrence of the problem will be held.
	8-channel connector output unit	**SL-VTP8J**	Output: 8 points	
	4-channel e-CON type connector output unit	**SL-VTP4E**	Output: 4 points	Using the e-CON compliant connector, up to 4 points or 8 points of the output device can be easily connected. For this reason, if the signal transmission line has a problem, the output conditions just before occurrence of the problem will be held.
	8-channel e-CON type connector output unit	**SL-VTP8E**	Output: 8 points	
	16-channel MIL connector input unit	**SL-VT16C1**	Input: 16 points	Since the MIL connector can be used for connection, this small-sized unit can connect up to 16 points of the intput device.
	16-channel MIL connector output unit	**SL-VTP16C1**	Output: 16 points	Since the MIL connector can be used for connection, this small-sized unit can connect up to 16 points of the output device. For this reason, if the signal transmission line has a problem, the output conditions just before occurrence of the problem will be held.
		SL-VTP16C1-S		
Analogue input unit		**SL-VTAD1**	Input: 1 point	1 point of the analogue input device can be connected.
Analogue output unit		**SL-VTDA1**	Output: 1 point	1 point of the analogue output device can be connected. For this reason, if the signal transmission line has a problem, the output conditions just before occurrence of the problem will be held.
Relay output terminal	4-channel relay output terminal	**SL-VTPR4**	Output: 4 points	These relay output terminals have 4 or 8 output points. Relays can be easily replaced. In addition, the output holding function is adopted for these terminals. For this reason, if the signal transmission line has a problem, the output conditions just before occurrence of the problem will be held.
	8-channel relay output terminal	**SL-VTPR8**	Output: 8 points	
I/O module	8-channel input module	**SL-VM8**	Input: 8 points	These modules are the IC type that enables external installation of the address setting switches and indicators. These modules therefore enable more flexible designing.
	16-channel input module	**SL-VM16**	Input: 16 points	
	8-channel output module	**SL-VMP8**	Output: 8 points	
	16-channel output module	**SL-VMP16**	Output: 16 points	
Picking switch		**SL-VPK01**	This picking switch, which is designed to be mounted on a pipe, supports use of a remote controller to set and check its address, lamp color, and other settings.	
Picking switch for shutter		**SL-VPK01**	This picking switch, which is designed to be mounted on a pipe, supports use of a remote controller to set and check its address, lamp color, and other settings. This switch has a movable arm to which the shutter can be attached.	

List of connectors

Designation	Model No.	Description	
Hook-up connector	**SL-J1A**	This connector enables a 'T' - branch of the exclusive 4-core flat cable. For 0.5mm^2 to 0.5mm^2 (Gray)	
Hook-up connector for cable extension	**SL-J3A**	Used for extension of the exclusive 4-core flat cable. For 0.5mm^2 to 0.5mm^2 (Black)	
Hook-up connector for cable end	**SL-JK**	If the snap male connector (**SL-CP□**) is used together, this hook-up connector (**SL-JK**) enables connection of the I/O unit to the end of the exclusive 4-core flat cable (0.5mm^2). (Light blue)	
Hook-up connector for 'T' - branch	**SL-JK1**	If the snap male connector (**SL-CP□**) is used together, this hook-up connector (**SL-JK1**) enables connection of the I/O unit to any point of the exclusive 4-core flat cable (0.5mm^2). (Blue)	
Snap male connector	**SL-CP1**	For 0.08 to 0.2mm^2 Lead wire diameter: ø0.7 to ø1.2mm (White)	Used for connection of the I/O device to the **SL-VT□J** / **SL-VTP□J** connector I/O unit or connection of the **S-LINK V** I/O unit to the **SL-JK** / **SL-JK1** hook-up connector.
	SL-CP2	For 0.3mm^2 Lead wire diameter: ø1.1 to ø1.6mm (Black)	
	SL-CP3	For 0.5mm^2 Lead wire diameter: ø1.7 to ø2.5mm (Bluish green)	
Snap female connector	**SL-CJ1**	For 0.08 to 0.2mm^2 Lead wire diameter: ø0.7 to ø1.2mm (White)	Used for connection to the **SL-CP□** snap male connector.
	SL-CJ2	For 0.3mm^2 Lead wire diameter: ø1.1 to ø1.6mm (Black)	

NOTE

We can provide connectors in units of 10-connector sets.
If you need connectors, please let us know how many sets you need (1 set: 10 pcs.)

Handy monitor

Designation	Model No.	Description
Handy monitor	**SL-VHM1**	This monitor can be connected to any point of the signal transmission line, and enables monitoring of the I/O conditions in units of 16 points. In addition, this monitor is incorporated with the **S-LINK V** controller functions. For this reason, even in the middle of installation work, this monitor can carry out I/O check for a divided conveyor, or the like, without activating the **S-LINK V** controller.

Address setting remote controller

Designation	Model No.	Description
Address setting remote controller	**SL-VAR1**	This remote controller is designed specifically to select the **SL-VPK0□** address and lamp color and to change its address offset. It can also send and receive all settings at once using infrared communications.

Others

Designation	Model No.	Description	
S-LINK V control cable	**SL-VC1000**	Length: 1m	Used for connection of the PLC I/O connector to the **S-LINK V** controller.
	SL-VC2000	Length: 2m	
S-LINK V connector link cable	**SL-VF70**	Length: 70mm	Used for connection of the PLC I/O connectors to each other.
	SL-VF150	Length: 150mm	
	SL-VF250	Length: 250mm	
Exclusive 4-core flat cable	**SL-RCM100**	Length: 100m (D line: White)	These flat cables are specially designed for the **S-LINK** system only. Conductor cross section: 0.5mm^2 4-core Outer diameter: 2.5mm x 4
	SL-RCM100-PK	Length: 100m (D line: White / Pink)	
	SL-RCM100-GN	Length: 100m (D line: White / Green)	
	SL-RCM100-GY	Length: 100m (D line: White / Gray)	
	SL-RCM200	Length: 200m (D line: White)	
Exclusive hook-up pliers	**SL-JPS**	Enables one-touch hook-up of the hook-up connector (**SL-J**□).	
	SL-JPC	Enables one-touch hook-up of the hook-up connector (**SL-CJ**□ / **CP1** / **CP2**).	
	SL-JPE	Enables one-touch hook-up of the hook-up connector (**SL-CP3**).	
End unit	**SL-VEU**	Connect this unit to the end of the main line.	
DIN rail mounting holder	**MS-CH**	Used for installation of the I/O unit or the end unit on the DIN rail. (Supplied with the **SL-VEU**)	
Screw mounting holder	**MS-SLH**	Used for installation of the I/O unit or the end unit. (In addition to the screws supplied with the holder, prepare additional two M4 pan head screws.)	
Address label	**SL-VMA1**	Affix this label to various **S-LINK V** units for easy identification of the set addresses.	
Address label (4-color set)	**SL-VMA1-SET**	4 colors (White / Pink / Green / Gray) of address labels for each system are included as a set.	

NOTE

- **MS-CH** is also available as an option. Model No.: **MS-CH×10** (10 pcs./ set)
- **SL-VMA1** is for 2 systems (0 to 255 × 2 pcs., 256 to 511 × 2 pcs.) as a set.
- **SL-VMA1-SET** is for 4 systems (0 to 255 × 4 pcs., 256 to 511 × 4 pcs.) as a set.

Chapter 5
Troubleshooting

Troubleshooting

This section describes how to solve the problems.
If your **S-LINK V** system does not operate properly, refer to this section.

Flowchart for taking corrective action for detected error

You can check the detected error using the LED indicators or the address display of the controller.
After checking the detected error, solve the problem as shown below:

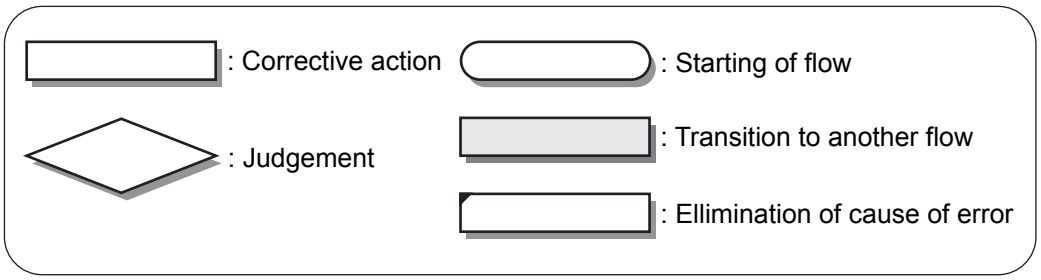

<For S-LINK V controller>

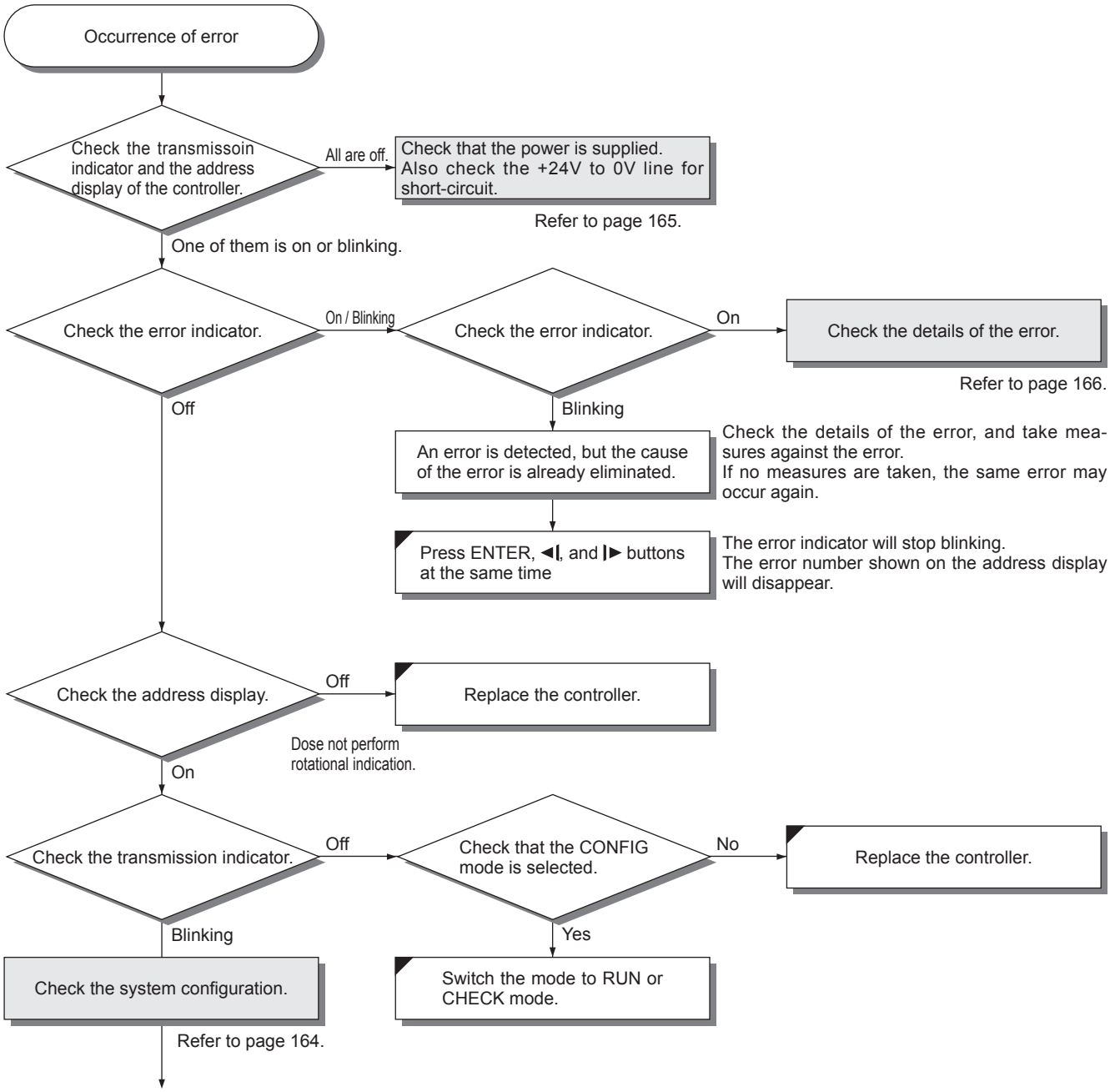

Chapter 5

<For S-LINK V control board>

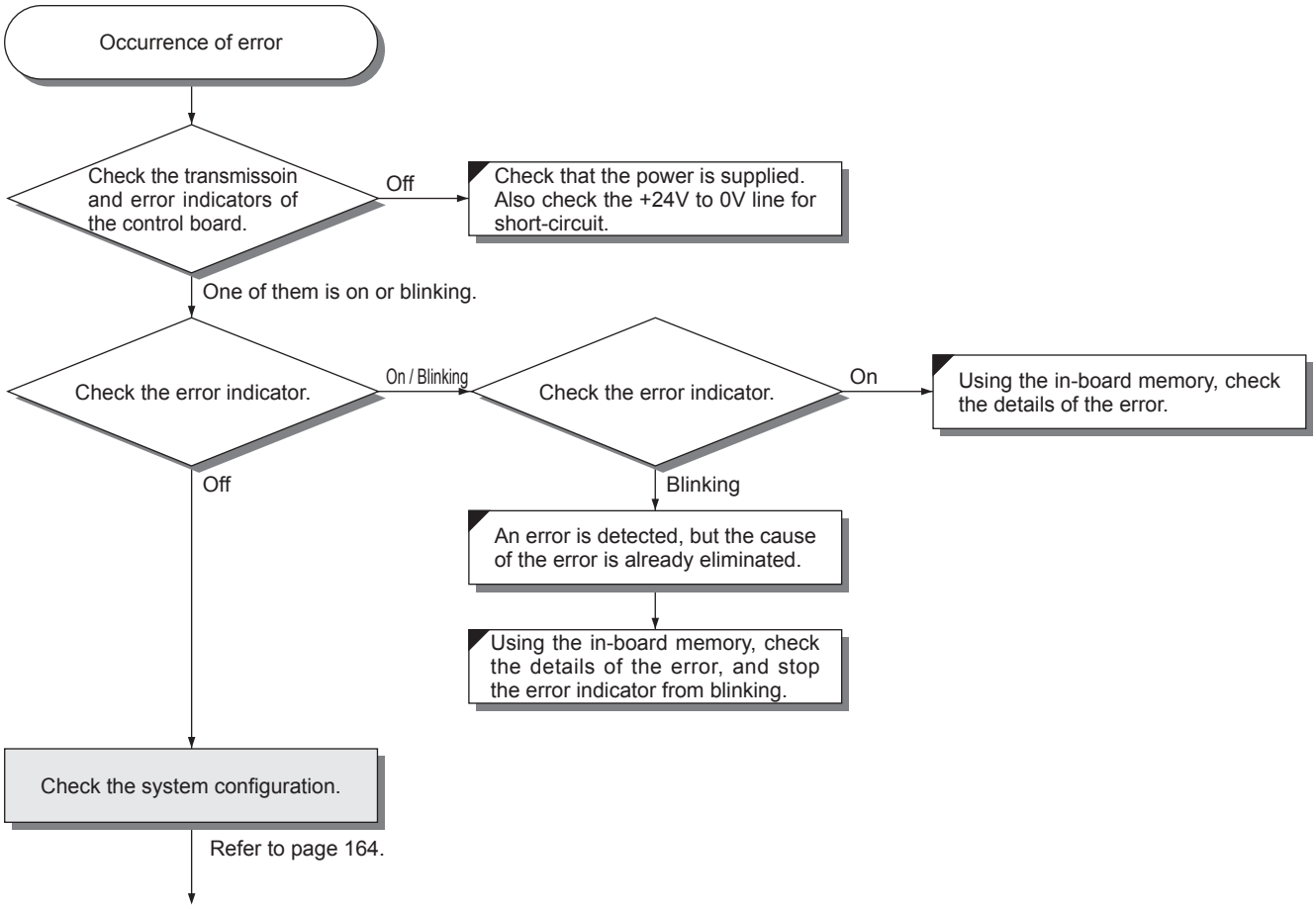

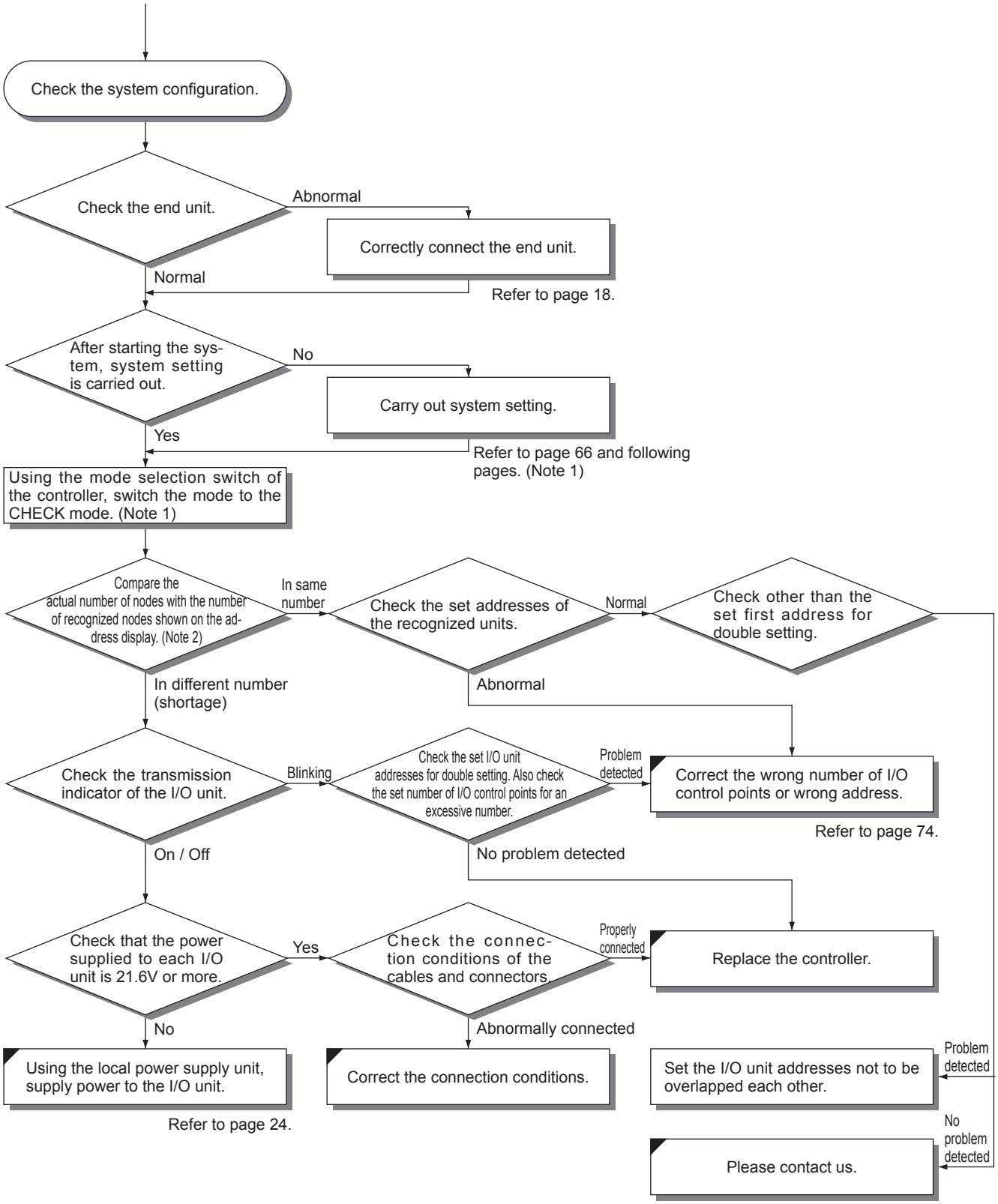

Notes: 1) For the control board, it is not necessary to switch the mode.
2) For the control board, the number of recognized nodes in the in-board memory is smaller than the actual number of nodes.

Flowchart for power supply condition check

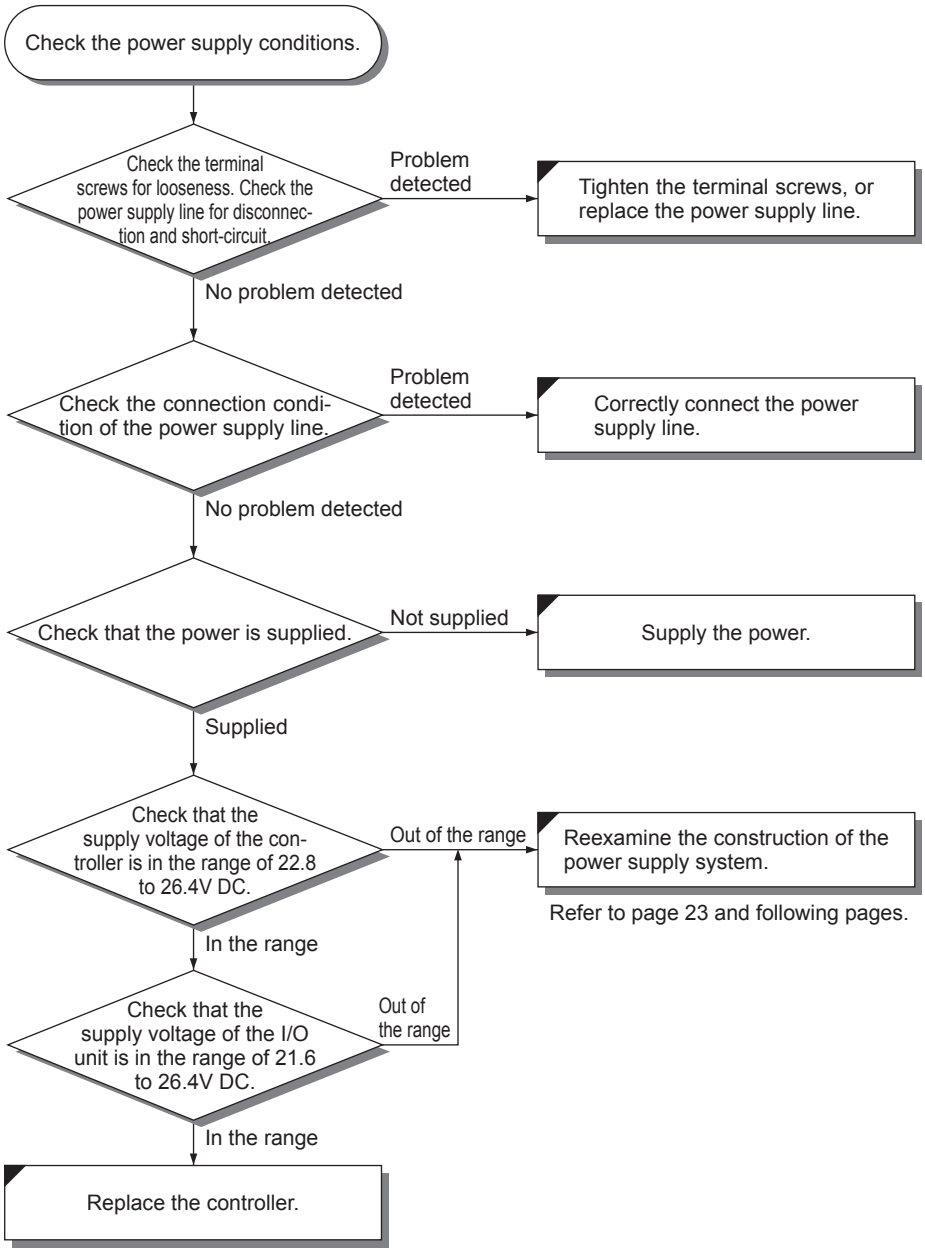

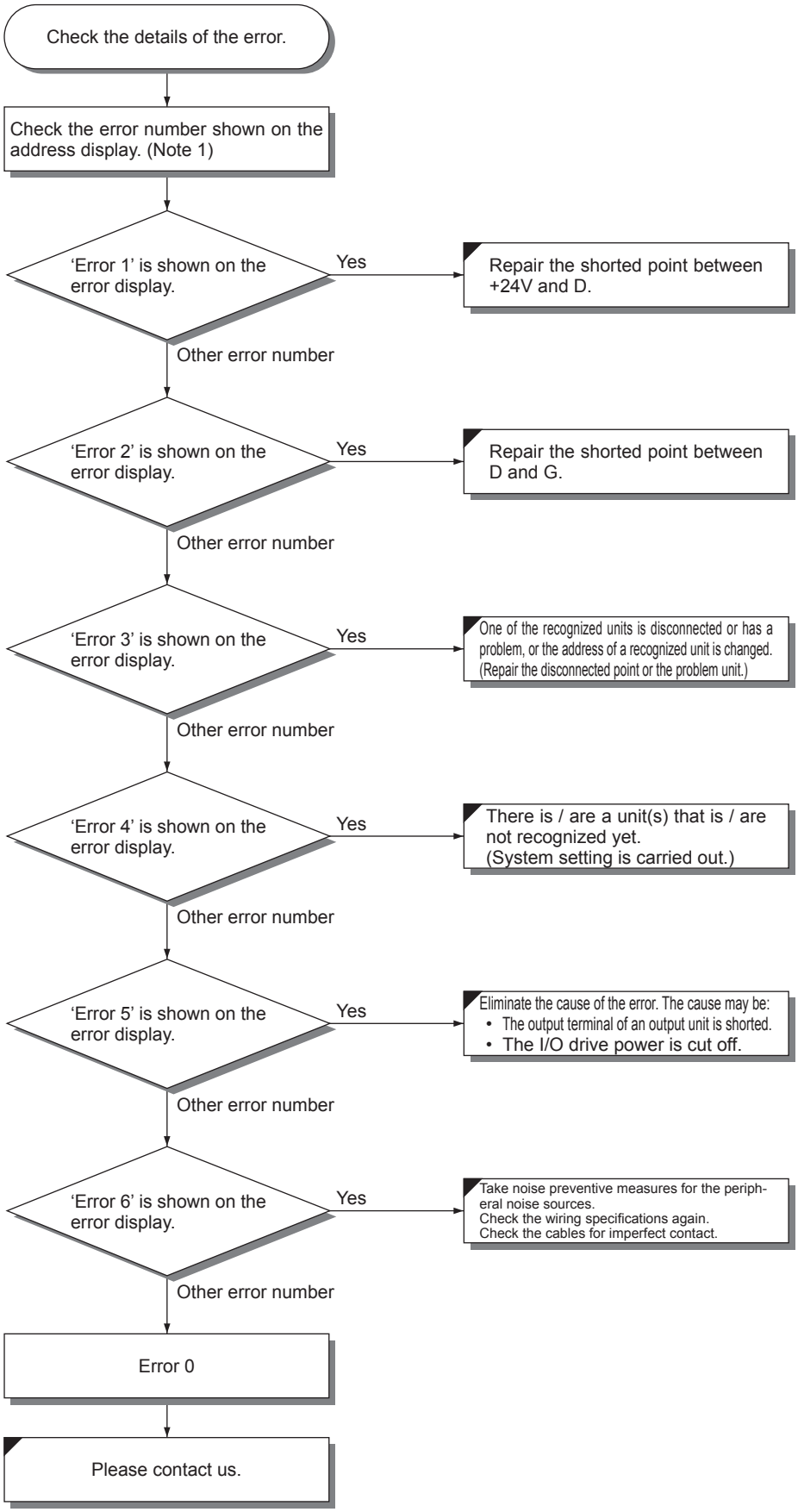

If the shorting piece of the **SL-VTB□** / **SL-VTBP□** is removed, the error indicator will also light up.

Notes: 1) If the control board is used, check the error number shown by the in-board memory.
2) If an error occur, the transmission of **S-LINK V** system will automatically recover when the cause is removed. However, the error record remains. For release, refer to page 168.
3) If incorrectly set the same addresses to the several units, the fewer number of units will display on the controller.

How to identify error unit after error detection

If an error occurs, switch the transmission mode to the CHECK mode.
In this mode, you can identify the address of the problem unit.

1 : PLC I/O unit (The white number is the connector number.)

32 : **S-LINK V** I/O unit (The number shows the address of the unit.)

<Example 1>

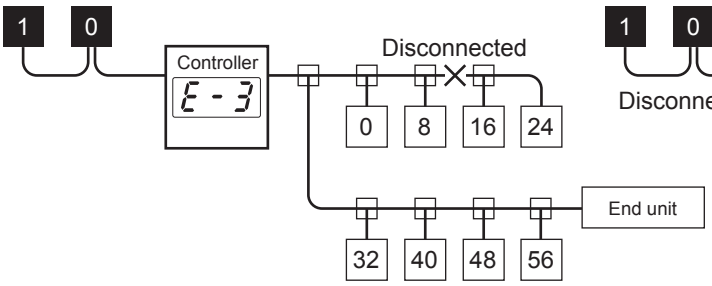

<Example 2>

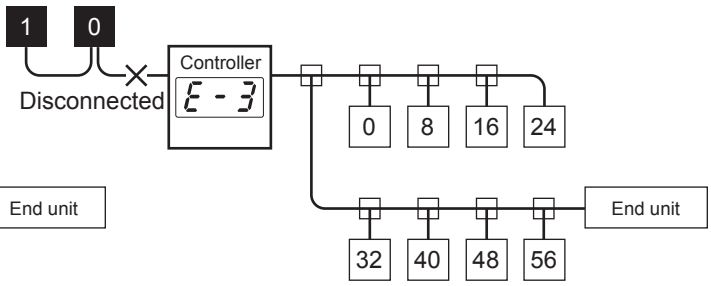

<Example 3>

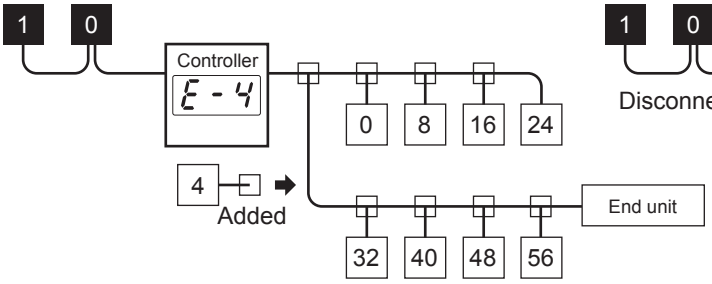

<Example 4>

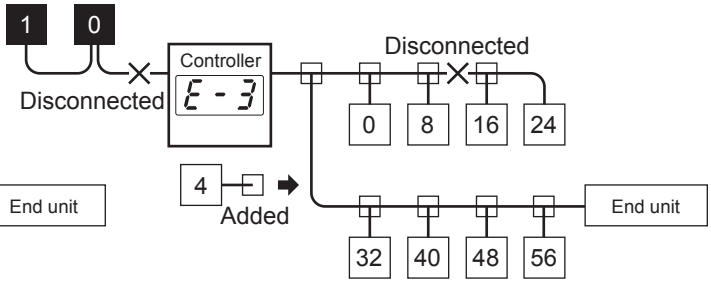

Operation	Description / Function	Example 1	Example 2	Example 3	Example 4
Switch the mode selection switch to CHECK.	Displays the number of PLC I/O connectors having a problem.	P 0	P 2	P 0	P 2
Press I► key.	Displays the number of nodes of the I/O unit having a problem.	2	0	1	2
Press I► key. Press I► key. (Repeatedly press the key to display all the data.)	Sequentially displays the connector numbers of the PLC I/O connectors having a problem from the smallest number to the largest number.		P 0 ↓ I► P 1		P 0 ↓ I► P 1
Press I► key. Press I► key. (Repeatedly press the key to display all the data.)	Sequentially displays the addresses of the I/O units having a problem from the smallest address number to the largest address number.	16 ↓ I► 24		4	16 ↓ I► 24

Notes: 1) Use I► key to display the numbers in the reversed order.
2) Press and hold SELECT key (◄I or I► key) to switch the displayed number at a fast speed.

<For example 1>

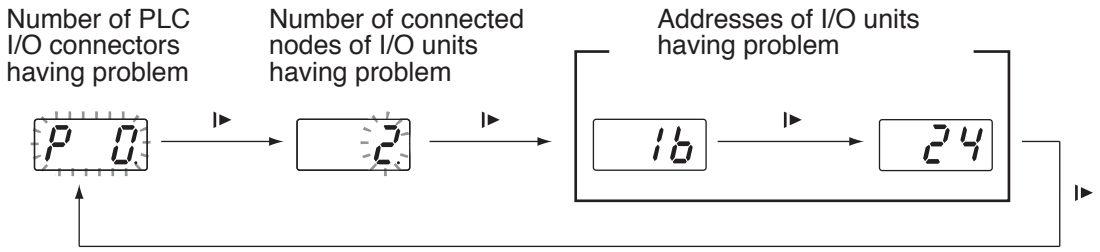

Chapter 5

How to extinguish error indicator

⚠ WARNING

Before canceling the error, be sure to confirm the details of the error, and then turn off the power.
After power-off, be sure to eliminate the cause of the error, and then turn on the power again.
If the power is not turned off, a serious problem may occur.

To stop the error indicator from blinking, or to erase the error number displayed on the address display, check that the mode selection switch is set to 'RUN,' and then press the ◄| , |► , and ENTER buttons at the same time. However, if the cause of the error is not eliminated, pressing the above buttons will not extinguish the error indicator.

If the **SL-VFP2**, **SL-VMEL-Q**, **SL-VPCI**, **SL-VVMES2**, **SL-VGU1-C**, **SL-VGU1-D**, **SL-VGU1-EC**, or **SL-VGU1-485** is adopted, also use the software function to extinguish the error indicator.

Utilization of output holding function

⚠ WARNING

Before setting the output holding function, be sure to fully understand the details of this function.
If the output holding function is not activated, a serious problem may occur.

Select the output unit operation for the output holding function. If a transmission error occurs, the output unit will operate in accordance with the selected operation. However, if the power is not supplied to the output unit, the output holding function will not be activated. If the normal transmission is restarted, normal operation will be performed.

- **Output holding function: ON**
  - If a transmission error is detected, the output conditions detected just before occurrence of the error will be held.
- **Output holding function: OFF**
  - If a transmission error is detected, all the outputs will be turned off.

Examples of use:
<Output holding function: ON>
- Use this function if the transfer unit uses the vacuum pick-up function.
- Use this function if a manifold is used for operation of the pressure unit.
- Use this function if non-holding of the current conditions may damage the machine (workpieces).

<Output holding function: OFF>
- Use this function if a transfer unit is adopted to perform line transfer operation.
- Use this function if a motor is adopted as the drive unit.
- Use this function if the items being transferred will be obstacles at resetting operation.

NOTE

We have predicted the cases that need this function, and listed above as examples.
However, to actually set the output holding function for your system, consider the environmental conditions of your system.

Appendix

Appendix

List of error numbers

If the **S-LINK V** system causes an error, the error indicator, address display, and error output will inform the error. Check the details of the error, and take optimum measures.

Error No.	Cause of error	Transmission after detecting error	Remedy
Error 0	Defective system (controller)	Transmission will be stopped.	Please contact us.
Error 1	Short-circuit between +24V and D	Transmission will be stopped. Eliminate the cause of the error. 5 seconds later, the system will be automatically reset.	Refer to page 166.
Error 2	Short-circuit between D and G		
Error 3	Malfunction or disconnection of recognized I/O unit or PLC I/O connector	Transmission will be continuously performed.	
Error 4	Addition of unrecognized unit		
Error 5	• Shorted output terminal of output unit • Cutting off of I/O machine drive power		
Error 6	This error may occur if system setting is not carried out properly.	If system setting is completed without fail, the system will be automatically reset.	

Flowchart for error detection

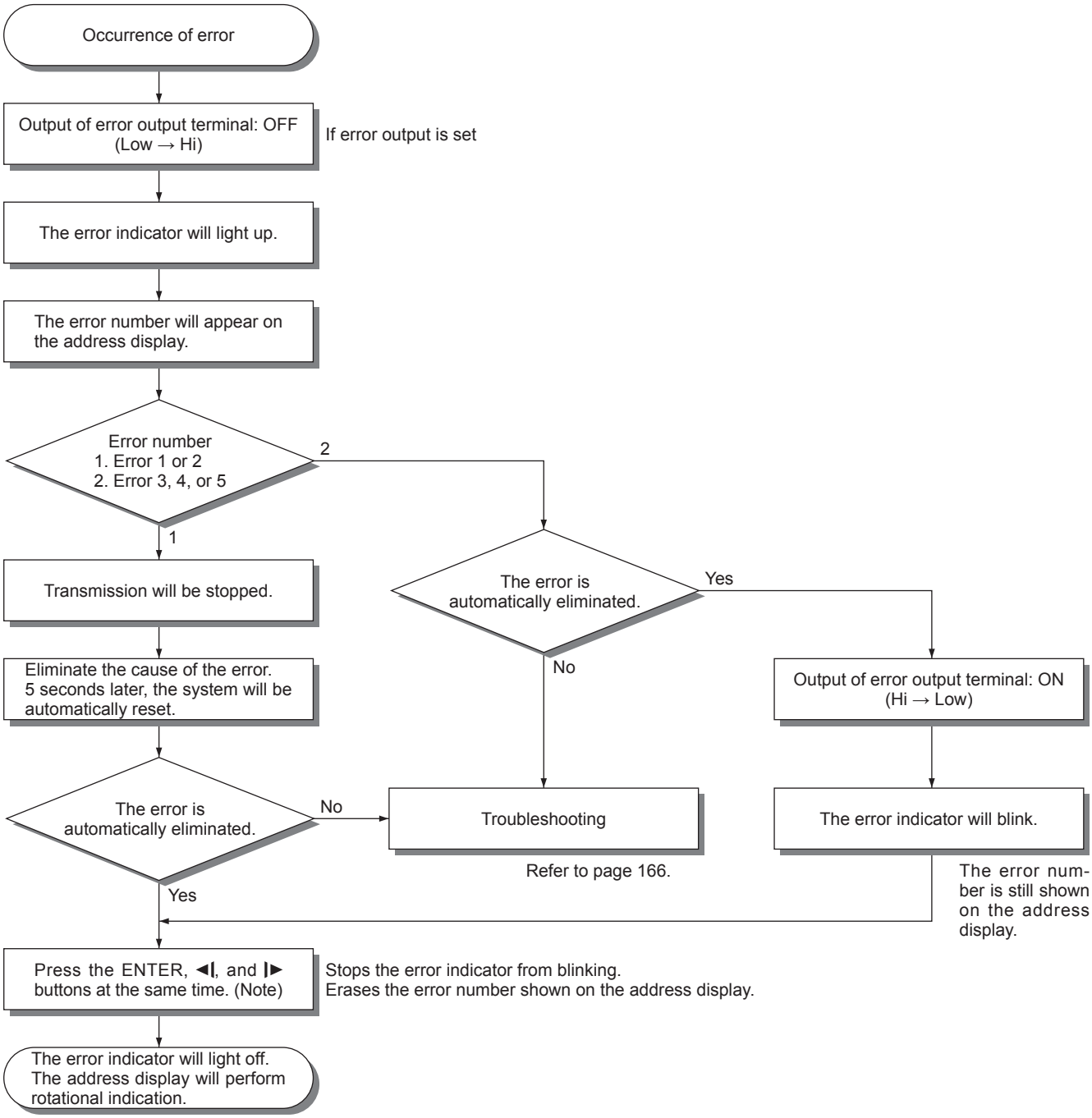

Note: Before following the above procedure, be sure to set the mode selection switch to 'RUN.'

Selection of connector link cable

<Description of symbols shown in figures>

70 : **SL-VF70** (70mm)
150: **SL-VF150** (150mm)
250: **SL-VF250** (250mm)

● Modules using SL-VS1 and SL-VP1

FPG-XY64D2T
(Panasonic Industrial Devices SUNX)

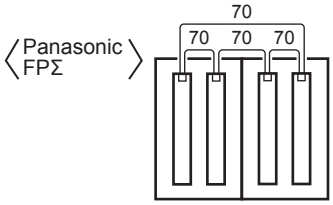

FP2-X32D2, FP2-Y32T
(Panasonic Industrial Devices SUNX)

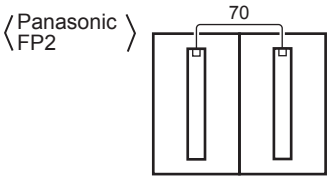

AFP33027-F, AFP33487-F
(Panasonic Industrial Devices SUNX)

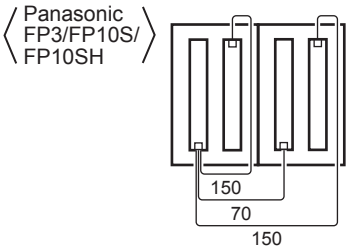

TC64DI,TC64DON (Toshiba Machine)

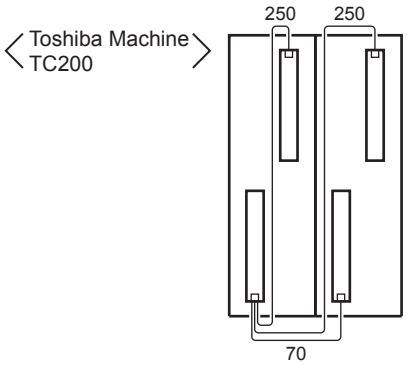

AFP7X32D2, AFP7Y32T
(Panasonic Industrial Devices SUNX)

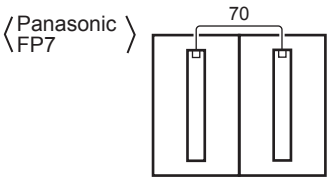

● Modules using SL-VS2 and SL-VP2

NS-X64-1, NS-XY64-1, NS-Y64-T1
(Fuji Electric FA Components & Systems)

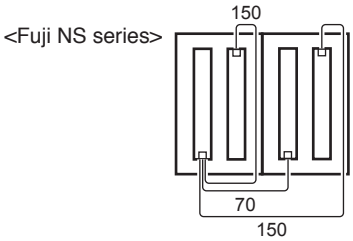

NV1X3204, NV1X3204-W, NV1X3206, NV1Y32T05P1
(Fuji Electric FA Components & Systems)

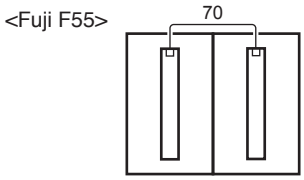

NC1X3204, NC1X3204-3, NC1X3206, NC1X6404, NC1X6406
NC1W6406T, NC1Y32T05P1, NC1Y64T05P1-1
(Fuji Electric FA Components & Systems)

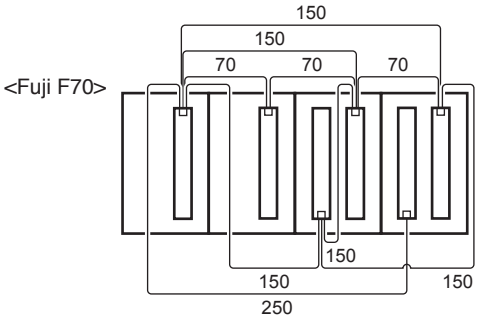

FTU125A, FTU126A, FTU127C, FTU612A, FTU222A
FTU227C (Fuji Electric FA Components & Systems)

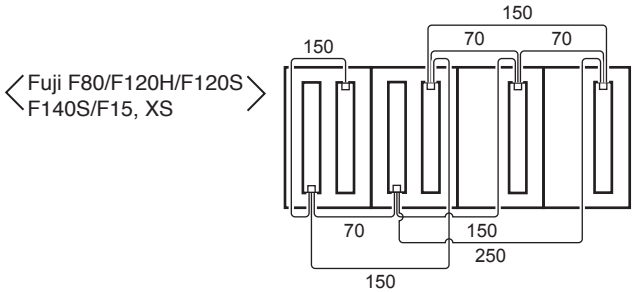

● Module using SL-VS3 and SL-VP3

A1SX41, A1SX41-S1, A1SX42, A1SX42-S1, A1SH42
A1SH42-S1, A1SY41, A1SY42 (Mitsubishi Electric)

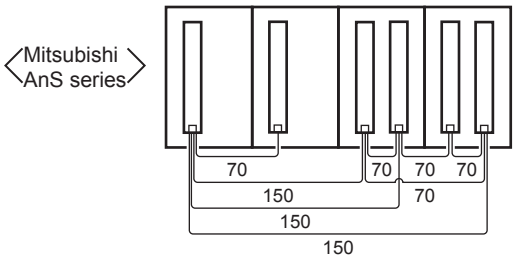

AX42, AH42, AJ35TC1-32D, AY42, AJ35TC1-32T (Mitsubishi Electric)

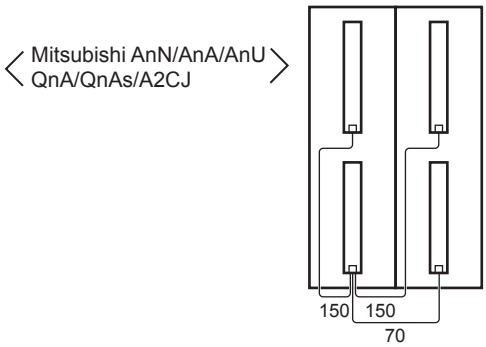

QX41, QX42, QH42P, QY41P, QY42P (Mitsubishi Electric)

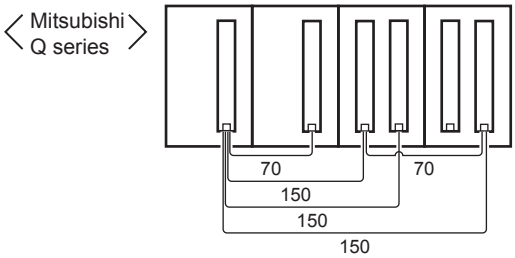

NP1X3206-W, NP1X6406-W, NP1Y32T09P1, NP1Y64T09P1
(Fuji Electric FA Components & Systems)

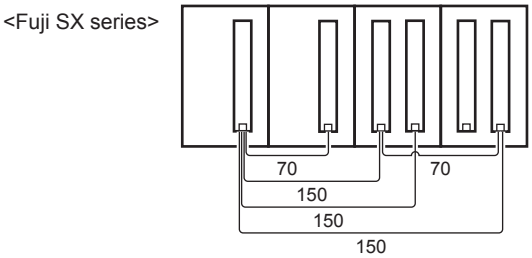

● Module using SL-VS4 and SL-VP4

JW-234N, JW-264N, JW-232S, JW-262S
(Sharp Manufacturing Systems)

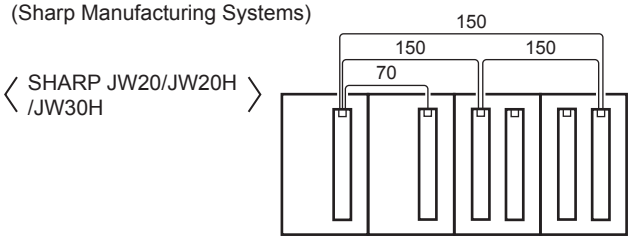

JW-34NC, JW-64NC, JW-32SC, JW-62SC
(Sharp Manufacturing Systems)

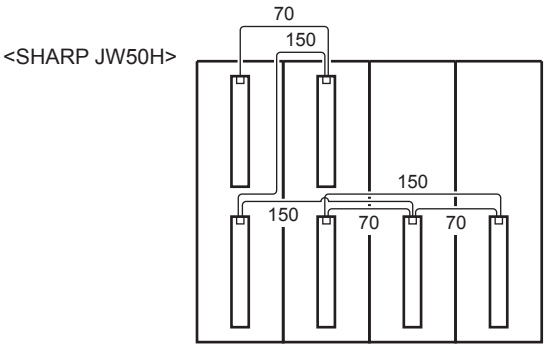

● Modules using SL-VS5 and SL-VP5

CJ1W-ID231, CJ1W-ID261, CJ1W-MD261, CJ1W-OD231, CJ1W-OD261
CS1W-ID231, CS1W-ID261, CS1W-MD261, CS1W-OD231, CS1W-OD261
C200H-ID216, C200H-ID217, C200H-OD218, C200H-OD219 (OMRON)

〈OMRON CJ1 series/CS1 series /C200H series〉

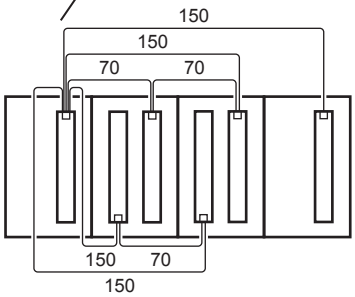

C500-ID219, C500-OD213 (OMRON)

〈OMRON CVM1/CV /C1000H/C2000H /C500〉

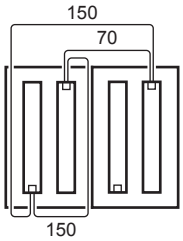

CQM1-ID213, CQM1-OD213 (OMRON)
<OMRON CQM1>

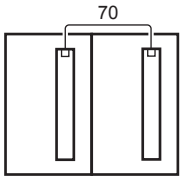

XD64-6N, WD64-6N, YD64-1A (Yokogawa Electric)
<Yokogawa FA500>

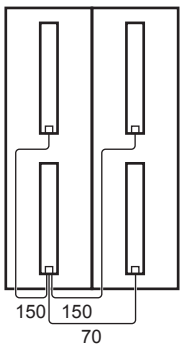

F3XD32-3N, F3XD64-3N, F3YD32-1A, F3YD64-1A
(Yokogawa Electric)
<Yokogawa FA-M3 / FA-M3R>

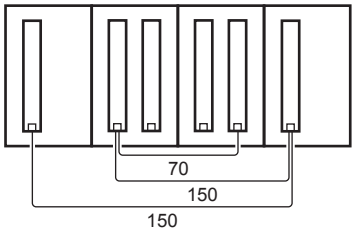

EH-XD32, EH-YT32 (Hitachi)

<Hitachi EH-150 series>

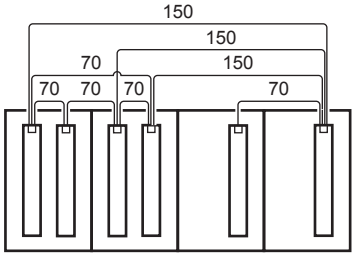

DI-335, DI-335H, DO-335 (TOSHIBA)

<TOSHIBA T3>

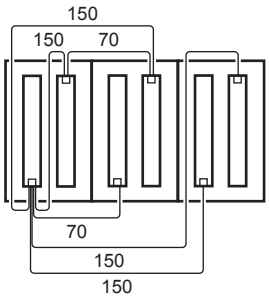

B2604 (YASUKAWA Electric)

〈YASUKAWA GL20/GL40S/ GL60S/GL60H/ GL70H〉

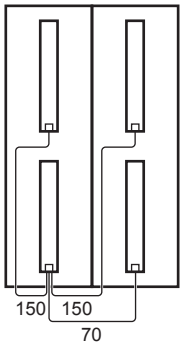

● Modules using SL-VS6 and SL-VP6

XDC24D2H, XDC24D3H, YTR24DH, YTR24D3H (Hitachi Industrial Equipment Systems)
<Hitachi H series>

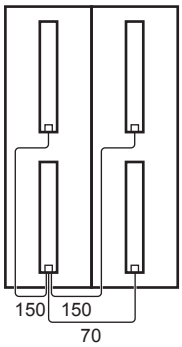

● Modules using SL-VS7 and SL-VP5

B2605 (YASUKAWA Electric)
<YASUKAWA GL20/GL40S/GL60S/GL60H/GL70H>

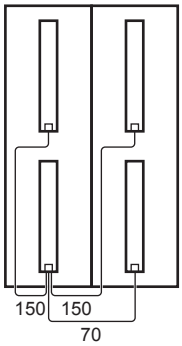

● Modules using SL-VS8 and SL-VP8

1746-IV32, 1746-OV32
[Rockwell Automation Japan (Allen-Bradley)]
<Allen-Bradley SLC500>

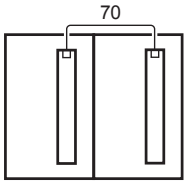

Setting of connector numbers, addresses, and number of I/O control points

To set the PLC I/O connector numbers, I/O unit addresses, and number of I/O control points, refer to pages 33, 72 and following pages.

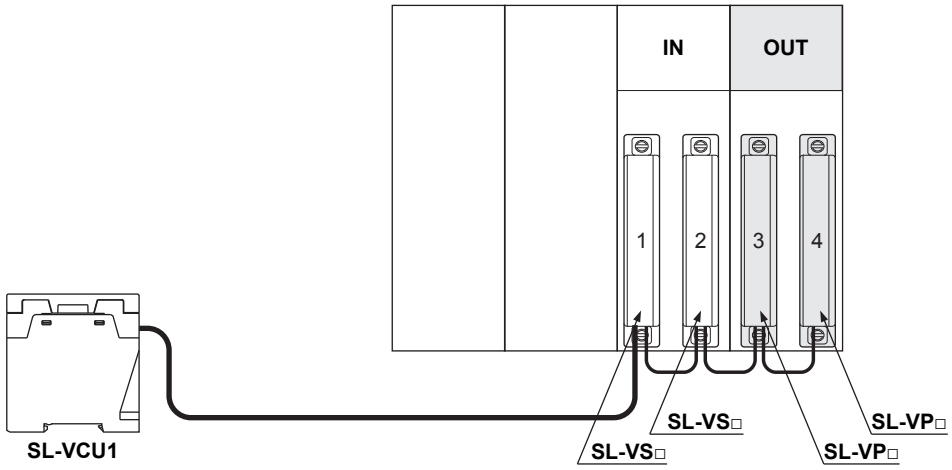

● **Setting example 1**

PLC I/O connector		I/O	PLC I/O connector model	Address
No.	Connector No.			
1	0	Input	**SL-VS□**	0 to 31
2	1		**SL-VS□**	32 to 63
3	2	Output	**SL-VP□**	64 to 95
4	3		**SL-VP□**	96 to 127

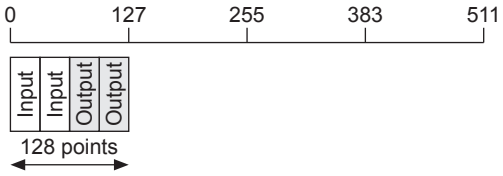

For setting example 1, set the number of I/O control points to ‘128.’
If the number of I/O control points is set to ‘128,’ data will not be refreshed for addresses subsequent to address 128.
If you set an address number to more than ‘128’ by mistake, the controller cannot recognize the I/O unit.

● **Setting example 2**

PLC I/O connector		I/O	PLC I/O connector model	Address
No.	Connector No.			
1	0	Input	**SL-VS□**	0 to 31
2	8		**SL-VS□**	256 to 287
3	1	Output	**SL-VP□**	32 to 63
4	9		**SL-VP□**	288 to 319

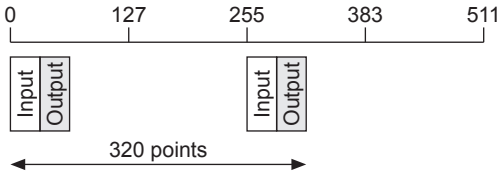

For setting example 2, set the number of I/O control points to ‘320.’
If the number of I/O control points is set to ‘320,’ data will not be refreshed for addresses subsequent to address 320.
If you set an address number to more than ‘320’ by mistake, the controller cannot recognize the I/O unit.
The controller can recognize the I/O unit having an address number between 64 and 255. The PLC, however, cannot communicate with the I/O unit having such an address number because there is no PLC I/O connector for such address numbers.

Glossary

Term	Description
A	
Address	Number showing the address For the **S-LINK V** system, this number should be set for each I/O unit.
B	
bit	Contraction of 'binary digit.' Binary numbers will be set for bits. In other words, '0' or '1' will be set for each bit.
bps	Abbreviation of 'bit per second.' This is a unit showing how many bits can be sent in 1 second.
Branch line	Line branched from the main line
C	
Cabtyre cable	Cable consisting of several insulated wires that are covered with a strong sheath
CHECK mode	In this mode, you can check the I/O unit recognition conditions using the controller. If operation is performed in the CHECK mode, transmission with the I/O units will be carried out, and the I/O signals will be refreshed just like the RUN mode.
Common (COM.)	Common (COM.) Line [+24V = COM. (+), 0V = COM. (-)] common to controller and I/O units
CONFIG mode	In this mode, you can set the transmission mode, number of I/O control points, and error output operation. In addition, system setting and default setting are possible in this mode. However, various settings and default setting are possible in the CONFIG mode just after power-on only. During operation in the CONFIG mode, transmission with the I/O units will not be performed. This means that refreshing of I/O signals will not be carried out.
Connector cap	This cap is attached to the end of each PLC I/O connector.
Connector number	Number assigned to each PLC I/O connector (**SL-VS**□, **SL-VP**□)
CPU module	PLC module having the functions of the central processing unit (CPU)
D	
DIN rail	This rail conforms to the DIN EN 50022 German industrial standards.
E	
Error number	Code indicated by the controller after detection of an error
Error output	Signal output from the controller after detection of an error The output terminal can be changed using the controller.
Exclusive (4-core) flat cable	**SL-RCM**□. The exclusive (hook-up) connectors can be used. This is a flat cable having 4 cores and cable conductor cross section of 0.5mm^2.
Exclusive (hook-up) connector	Exclusive (hook-up) **SL-J**□, **SL-CP**□, and **SL-CJ**□ If you use this connector and exclusive tool, wiring can be easily performed.
F	
Failsafe	Design adopted for the system to ensure safety even if the system performs abnormal operation or malfunctions
H	
Hexadecimal number	Hexadecimal number expressed by numbers 0 to 9 and alphabetic characters A, B, C, D, E, and F
Hook-up connector	**SL-J**□, **SL-CP**□, **SL-CJ**□, etc.
I	
Interference between signals	Interference between signals also referred to as crosstalk or collision. This is a problem caused by an undesirable signal sent from the other transmission line.
Interlock	Method to prohibit the entire or partial machine operation in order to ensure safe operation of the system or machine and to prevent accidents until certain conditions are met
Isolation (Photo-isolation)	To electrically separate the external circuit from the internal circuit using a photo-coupler, etc. in order to reduce the influence of external noise in the I/O area
L	
Leakage current	Electric current that flows through the output area in the output OFF mode
LED	Abbreviation of 'light emitting diode.' This diode will emit light if electric current flows through the diode.
M	
Main line	Longest route from the controller to the line end
Maximum transmission distance	Maximum main line length controllable for the controller. This length depends on the transmission mode, number of nodes, and conductor cross section of the transmission cable.
Maximum load current (Output sink current)	Maximum current used by the output unit

Term	Description
N	
Node	Number of I/O units / 1 unit = 1 node
Number of I/O	Total number of signals that are used by the controller to control the input and output points areas
O	
OFF voltage	Voltage to keep the input unit at the OFF status
ON voltage	Voltage to keep the input unit at the ON status
Open collector output	One of no-contact output terminals. This terminal is the collector terminal (final output) of the transistor and is used as the terminal for connection to the external load. There are two types of open collector outputs: NPN and PNP types. Select the optimum type for the transistor.
P	
Parallel communication	A signal line is prepared for each data bit in order to carry out the simultaneous communication.
PLC	Abbreviation of 'programmable logic controller.' A PLC normally means the sequence control unit of stored program type.
PLC input module	This module converts the external signals received from the operation units and various sensors into logical signals. This module can be attached to and removed from the PLC.
PLC output module	This module converts the logical signals into different signals that can be used for operation of the external units. This module can be attached to and removed from the PLC.
Power supply capacity	Design adopted for the system to ensure safety even if the system performs abnormal operation or malfunctions
Protocol	Rule preliminarily determined to clarify how to transfer data between the controller and the units
R	
Refreshing time	Time required for data transfer between the controller and the I/O units
Response delay	When the signal of the external connection terminal is changed, it takes some time for the other terminal to respond the change in the signal. This time difference is referred to as the response delay.
RUN mode	This mode is used for normal operation of the controller. In this mode, the controller will communicate with the I/O units and refresh the I/O signals.
S	
Serial communication	Data bits are arranged in series from the viewpoint of time, and transmission will be carried out using one transmission line by sequentially outputting data
Shorting piece	Metal piece used for shorting the power supply terminal to the common terminal at the I/O terminal
Shorting piece (Controller)	Metal piece used for shorting the power supply terminal of the controller to the power supply terminal of the transmission cable
T	
Total cable length	Sum total of the main line length and branch line lengths This length depends on the transmission mode.
Transmission cable	This cable is used for connection of I/O units that are controlled by the **S-LINK V** protocol. This cable consists of 4 wires: +24V and 0V power supply line wires and D and G signal transmission line wires.
Transmission mode	In this mode, the controller will communicate with the I/O units.
Troubleshooting	To investigate the cause of a problem (malfunction of a unit, etc.), and to solve the problem or taking measures against the problem while following the specified procedure
V	
VCTF cable	Vinyl cabtyre round cable specified in JIS C 3306 For the **S-LINK V** system, you can use the non-shielded vinyl cabtyre round cable having conductor cross section of 0.3 to 2.0mm^2.
Voltage drop	Voltage drop occurs in the power supply cable due to the cable resistance.

FAX Sheet for Asking Question

If you have a question about the **S-LINK V** system (regarding designing, installation, etc.), copy this page, and then write your question in details. After that, fax the written sheet. We will answer your question.

Please enter necessary data.

Date:

Description

System check items:

No. of nodes	units
Communication distance	m
Total cable length	m
Power supply capacity	A
Type and cross section of communication cable (mm^2)	
Existence of end unit	
Exists (units) / Does not exist	

Controller check items:

Communication mode
A ・ B ・ C
I/O control points
points

Items indicated in CHECK mode	
Number of connected PLC connectors	units
Number of connected nodes (I/O units)	units
Recognized connector number of connected PLC connector:	
Recognized address of connected I/O unit:	

Address

TEL FAX

E-mail

Company name

Section name

Name

MEMO

GENERAL TERMS AND CONDITIONS

Please read this document carefully with respect to our product warranty policy before using our Panasonic Industrial Devices SUNX products ("Products"). If you have any questions or comments regarding do's and don'ts of the Products, please consult your local Panasonic Industrial Devices SUNX authorized dealer for the correct use and application of the Products.

1. WARRANTIES:

(1) Subject to the exclusions stated in 2 (EXCLUSIONS) herein below, Panasonic Industrial Devices SUNX warrants the Products to be free of defects in material and workmanship for a period of one (1) year from the date of shipment under normal usage in environments commonly found in manufacturing industry.

(2) Any Products found to be defective must be shipped to Panasonic Industrial Devices SUNX with all shipping costs paid by Purchaser or offered to Panasonic Industrial Devices SUNX for inspection and examination. Upon examination by Panasonic Industrial Devices SUNX, Panasonic Industrial Devices SUNX will, at its sole discretion, repair or replace at no charge, or refund the purchase price of, any Products found to be defective.

2. EXCLUSIONS:

(1) This warranty does not apply to defects resulting from any cause:
- (i) which was due to abuse, misuse, mishandling, improper installation, improper interfacing, or improper repair by Purchaser;
- (ii) which was due to unauthorized modification by Purchaser, in part or in whole, whether in structure, performance or specification;
- (iii) which was not discoverable by a person with the state-of-the-art scientific and technical knowledge at the time of manufacture;
- (iv) which was due to an operation or use by Purchaser outside of the limits of operation or environment specified by Panasonic Industrial Devices SUNX;
- (v) which was due to normal wear and tear;
- (vi) which was due to Force Majeure; and
- (vii) which was due to any use or application expressly discouraged by Panasonic Industrial Devices SUNX in 4 (CAUTIONS FOR SAFE USE) hereunder.

(2) This warranty extends only to the first purchaser for application, and is not transferable to any person or entity which purchased from such purchaser for application.

3. DISCLAIMERS

(1) Panasonic Industrial Devices SUNX's sole obligation and liability under this warranty is limited to the repair or replacement, or refund of the purchase price, of a defective Product, at Panasonic Industrial Devices SUNX's option.

(2) THE REPAIR, REPLACEMENT, OR REFUND IS THE EXCLUSIVE REMEDY OF THE PURCHASER, AND ALL OTHER WARRANTIES, EXPRESS OR IMPLIED, INCLUDING, WITHOUT LIMITATION, THE WARRANTIES OF MERCHANTABILITY, FITNESS FOR A PARTICULAR PURPOSE, AND NON-INFRINGEMENT OF PROPRIETARY RIGHTS, ARE HEREBY EXPRESSLY DISCLAIMED. IN NO EVENT SHALL PANASONIC INDUSTRIAL DEVICES SUNX AND ITS AFFILIATED ENTITIES BE LIABLE FOR DAMAGES IN EXCESS OF THE PURCHASE PRICE OF THE PRODUCTS, OR FOR ANY INDIRECT, INCIDENTAL, SPECIAL OR CONSEQUENTIAL DAMAGES OF ANY KIND, GENERAL TERMS AND CONDITIONS 4 OR ANY DAMAGES RESULTING FROM LOSS OF USE, BUSINESS INTERRUPTION, LOSS OF INFORMATION, LOSS OR INACCURACY OF DATA, LOSS OF PROFITS, LOSS OF SAVINGS, THE COST OF PROCUREMENT OF SUBSTITUTED GOODS, SERVICES OR TECHNOLOGIES, OR FOR ANY MATTER ARISING OUT OF OR IN CONNECTION WITH THE USE OR INABILITY TO USE THE PRODUCTS.

4. CAUTIONS FOR SAFE USE

(1) The applications shown in the catalogue are only suggestions, and it is Purchaser's sole responsibility to ascertain the fitness and suitability of the Products for any particular application, as well as to abide by Purchaser's applicable local laws and regulations, if any.

(2) Never use the Products NOT rated or designated as "SAFETY SENSOR" in any application involving risk to life or property. When such a use is made by Purchaser, such Purchaser shall indemnify and hold harmless Panasonic Industrial Devices SUNX from any liability or damage whatsoever arising out of or in relation to such use.

(3) In incorporating the Products to any equipment, facilities or systems, it is highly recommended to employ fail-safe designs, including but not limited to a redundant +++design, flame propagation prevention design, and malfunction prevention design so as not to cause any risk of bodily injury, fire accident, or social damage due to any failure of such equipment, facilities or systems.

(4) The Products are each intended for use only in environments commonly found in manufacturing industry, and, unless expressly allowed in the catalogue, specification or otherwise, shall not be used in, or incorporated into, any equipment, facilities or systems, such as those:
- (a) which are used for the protection of human life or body parts;
- (b) which are used outdoors or in environments subject to any likelihood of chemical contamination or electromagnetic influence;
- (c) which are likely to be used beyond the limits of operations or environments specified by Panasonic Industrial Devices SUNX in the catalogue or otherwise;
- (d) which may cause risk to life or property, such as nuclear energy control equipment, transportation equipment (whether on rail or land, or in air or at sea), and medical equipment;
- (e) which are operated continuously each day for 24 hours; and
- (f) which otherwise require a high level of safety performance similar to that required in those equipment, facilities or systems as listed in (a) through (e) above.

5. EXPORT CONTROL LAWS

In some jurisdictions, the Products may be subject to local export laws and regulations. If any diversion or re-export is to be made, Purchaser is advised to abide by such local export laws and regulations, if any, at its own responsibility.

Please contact .....

Panasonic Industrial Devices SUNX Co., Ltd.

■ Overseas Sales Division (Head Office): 2431-1 Ushiyama-cho, Kasugai-shi, Aichi, 486-0901, Japan

■ Telephone: +81-568-33-7861 ■ Facsimile: +81-568-33-8591

panasonic.net/id/pidsx/global

For sales network, please visit our website.

© Panasonic Industrial Devices SUNX Co., Ltd. 2018

October, 2018 PRINTED IN JAPAN

WUME-SLINKV-8