MotorGuide®

8M4005264 121 eng

Operation
Maintenance
Installation
Warranty
Manual

Tour 82/Tour 109

© 2021 Mercury Marine

Compliance Statement

This device complies with Part 15 of the FCC Rules. Operation is subject to the following two conditions: (1) this device may not cause harmful interference, and (2) this device must accept any interference received, including interference that may cause undesired operation. This device complies with FCC Rules. Changes or modifications not expressly approved by MotorGuide could void the user's authority to operate the equipment. This device complies with Industry Canada license-exempt RSS standard(s). Operation is subject to the following two conditions: (1) this device may not cause interference, and (2) this device must accept any interference, including interference that may cause undesired operation of the device. Le présent appareil est conforme aux CNR d'Industrie Canada applicables aux appareils radio exempts de licence. L'exploitation est autorisée aux deux conditions suivantes : (1) l'appareil ne doit pas produire de brouillage, et (2) l'utilisateur de l'appareil doit accepter tout brouillage radioélectrique subi, même si le brouillage est susceptible d'en compromettre le fonctionnement.

Environmental Compliance Statement

All MotorGuide products that are subject to the Directive 2012/19/EU WEEE directive are compliant with the WEEE marking requirement. Such products are marked with the "crossed-out wheelie bin" WEEE symbol (shown, below) in accordance with European Standard EN50419.

The symbol on the product or its packaging indicates that this product must not be disposed of with your other household waste. Instead, it is your responsibility to dispose of your waste equipment by handing it over to a designated collection point for the recycling of waste electrical and electronic equipment. The separate collection and recycling of your waste equipment at the time of disposal will help conserve natural resources and ensure that it is recycled in a manner that protects human health and the environment. For more information about where you can drop off your waste for recycling, please contact your local authority, or where you purchased your product.

CE Declaration

An official copy of the Declaration of Conformity can be found at http://www.motorguide.com/support/certifications.

Thank You

Thank you for choosing MotorGuide, one of the finest trolling motors available. Years of experience have been committed to the goal of producing the finest quality products. This led to MotorGuide's reputation for strict quality control, excellence, durability, long-lasting performance and being the best at providing after-the-sale service and support.

Please read this manual carefully before operating your motor. This manual has been prepared to assist you in the operation, safe use, and care of your trolling motor.

Again, thank you for your confidence in MotorGuide.

Warranty Message

The product you have purchased comes with a **Three Year Limited Warranty** from MotorGuide, the terms of the policy are set forth in the **Warranty Information** section of this manual. The policy statement contains a description of the duration of coverage, **important disclaimers and limitations of damages,** and other related information. Please review this important information.

The description and specifications contained herein were in effect at the time this manual was approved for printing. MotorGuide, whose policy is one of continued improvement, reserves the right to discontinue models at any time, to change specifications, designs, methods, or procedures without notice and without incurring obligation.

MotorGuide, Lowell, Michigan U.S.A.

Copyright and Trademark Information

© MERCURY MARINE. All rights reserved. Reproduction in whole or in part without permission is prohibited.

Alpha, Axius, Bravo One, Bravo Two, Bravo Three, Circle M with Waves Logo, K-planes, Mariner, MerCathode, MerCruiser, Mercury, Mercury with Waves Logo, Mercury Marine, Mercury Precision Parts, Mercury Propellers, Mercury Racing, MotorGuide, OptiMax, Quicksilver, SeaCore, Skyhook, SmartCraft, Sport-Jet, Verado, VesselView, Zero Effort, Zeus, #1 On the Water and We're Driven to win are registered trademarks of Brunswick Corporation. Pro XS is a trademark of Brunswick Corporation. Mercury Product Protection is a registered service mark of Brunswick Corporation.

Warranty Information

Disclaimers, Limitations, and Waivers..... 1
MotorGuide Limited Three Year Warranty..... 2

General Information

Boater's Responsibilities..... 4
Protecting People in the Water..... 4
Passenger Safety Message..... 4
Safe Boating Suggestions..... 4

Product Overview

Box Contents..... 6
Tour 82/Tour 109 MotorGuide Trolling Motor..... 9
Specifications..... 10

Wiring and Battery Information

Wiring and Battery Information..... 11
Recommended Practice and Procedures..... 11
Battery Recommendations..... 11
Battery Precautions..... 12
Wire and Cable Routing..... 12
Wire Color Code Abbreviations..... 13
Battery Connection..... 13

Trolling Motor Installation and Operation

Installing the Steering System on the Mount..... 16
Trolling Motor Installation..... 18
Permanent Foot Pedal Mounting—Optional..... 21
Bounce Buster Installation..... 22
Installing the Zero-G Gas Spring..... 24
Connecting the Sonar Display to the Trolling Motor..... 25
Reducing Sonar Transducer Interference..... 26
Cable Routing Installation for External Accessories..... 27
Stowing the Trolling Motor..... 28
Deploying the Trolling Motor..... 30
Adjusting the Trolling Motor Depth..... 32
Directional Indicator..... 32
Speed Control..... 34

Maintenance

Trolling Motor Care..... 35
Inspection and Maintenance Schedule..... 35
Lubrication Points..... 36
Battery Inspection..... 37
Propeller Replacement..... 37
Adjusting the Steering Cable Tension..... 39

Troubleshooting

Trolling Motor Performance..... 40
Resetting Motor After Unexpected Stop..... 41

Owner Service Assistance

Mercury Marine Service Offices..... 42

WARRANTY INFORMATION

Disclaimers, Limitations, and Waivers

No individual or entity, including Mercury Marine authorized dealers, has been given authority by Mercury Marine to make any affirmation, representation or warranty regarding the Product, other than those contained in this Mercury Marine Limited Warranty, and if made, shall not be enforceable against Mercury Marine.

DISCLAIMERS AND LIMITATIONS:

THE IMPLIED WARRANTIES OF MERCHANTABILITY AND FITNESS FOR A PARTICULAR PURPOSE ARE EXPRESSLY DISCLAIMED. TO THE EXTENT THAT THEY CANNOT BE DISCLAIMED, THE IMPLIED WARRANTIES ARE LIMITED IN DURATION TO THE LIFE OF THE EXPRESS WARRANTY. INCIDENTAL AND CONSEQUENTIAL DAMAGES ARE EXCLUDED FROM COVERAGE UNDER THIS WARRANTY. SOME STATES/COUNTRIES DO NOT ALLOW FOR THE DISCLAIMERS, LIMITATIONS, AND EXCLUSIONS IDENTIFIED ABOVE; AS A RESULT, THEY MAY NOT APPLY TO YOU. THIS WARRANTY GIVES YOU SPECIFIC LEGAL RIGHTS, AND YOU MAY ALSO HAVE OTHER LEGAL RIGHTS THAT VARY FROM STATE TO STATE AND COUNTRY TO COUNTRY.

SUBMISSION TO JURISDICTION

ANY LEGAL SUIT, ACTION, OR PROCEEDING ARISING OUT OF OR RELATING TO THIS MERCURY MARINE LIMITED WARRANTY OR THE TRANSACTIONS CONTEMPLATED HEREBY SHALL BE INSTITUTED IN THE COURT OF THE STATE OF WISCONSIN, COUNTY OF MILWAUKEE, AND EACH PARTY IRREVOCABLY SUBMITS TO THE EXCLUSIVE JURISDICTION OF SUCH COURT IN ANY SUCH SUIT, ACTION, OR PROCEEDING. THE PARTIES IRREVOCABLY AND UNCONDITIONALLY WAIVE ANY OBJECTION TO JURISDICTION AND/OR VENUE OF ANY SUIT, ACTION, OR PROCEEDING IN SUCH COURTS AND IRREVOCABLY WAIVE AND AGREE NOT TO PLEAD OR CLAIM IN ANY SUCH COURT THAT ANY SUCH SUIT, ACTION, OR PROCEEDING BROUGHT IN ANY SUCH COURT HAS BEEN BROUGHT IN AN INCONVENIENT FORUM.
ALL CLAIMS MUST BE BROUGHT IN THE PARTIES' INDIVIDUAL CAPACITY, AND NOT AS A CLASS MEMBER IN ANY PURPORTED CLASS OR REPRESENTATIVE PROCEEDING.

GOVERNING LAW

ALL MATTERS ARISING OUT OF OR RELATING TO THIS MERCURY MARINE LIMITED WARRANTY SHALL BE GOVERNED BY AND CONSTRUED IN ACCORDANCE WITH THE INTERNAL LAWS OF THE STATE OF WISCONSIN WITHOUT GIVING EFFECT TO ANY CHOICE OR CONFLICT OF LAW PROVISION OR RULE (WHETHER OF THE STATE OF WISCONSIN OR ANY OTHER JURISDICTION).

WARRANTY INFORMATION

MotorGuide Limited Three Year Warranty

KEEP YOUR ORIGINAL PURCHASE RECEIPT

1. To obtain warranty service, the purchaser should deliver or return the unit (postage prepaid and insured) to any MotorGuide authorized service center. DO NOT RETURN TO PLACE OF PURCHASE unless they are an authorized service center. Motors purchased in other countries should be returned to place of purchase. Products returned by mail should be carefully packaged and include a note describing the nature of the problem and/or service requested, customer address, and phone number. A copy of the receipt, Bill of Sale, registration verification, or other proof of purchase is required with the return of the product for warranty consideration. Warranty claims will not be accepted without presentation of purchase receipt for trolling motor, other verification of registration, or Bill of Sale for boat package.
2. MotorGuide electric trolling motors are warranted to the original purchaser to be free from defects in material and/or workmanship for three (3) years.
3. MotorGuide, at its discretion, will repair or replace items covered under the terms of this warranty. Neither MotorGuide nor MotorGuide service dealers are responsible for damages to MotorGuide products due to repairs performed by anyone other than the MotorGuide Factory Service Center. Neither MotorGuide nor Mercury Marine is responsible for failure or damage caused by improper installation, set-up, preparation, or previous service or repair errors.
4. Warranty coverage is available only to customers that purchase from a dealer authorized by MotorGuide/Mercury Marine to distribute the product in the country in which the sale occurred. Warranty coverage and duration varies by the country in which the product resides. This warranty applies to Tour MotorGuide trolling motors sold and residing in the United States. This Limited Warranty begins on the date the product is first sold to a purchaser or the date on which the product is first put into service, whichever occurs first. MotorGuide accessories are covered by this Limited Warranty for a coverage period of one (1) year from the date of retail sale. The repair or replacement of parts, or the performance of service under this warranty, does not extend the life of this warranty beyond its original expiration date. Promotional warranties are not included in this statement and coverage may vary by promotion. Product either sold or put into service more than six years from date of manufacture is excluded from warranty coverage.
5. MotorGuide Composite Shaft Limited Lifetime Warranty. MotorGuide composite shafts are warranted to the original retail purchaser to be free of defects in material or workmanship for the lifetime of the original purchaser. MotorGuide will provide a new composite shaft at no cost for any composite shaft which contains a defect in material or workmanship. The installation costs are the sole responsibility of the purchaser.

WARRANTY INFORMATION

6. This warranty does not apply to normal worn parts, i.e., worn cables, adjustments, or product damage due to 1) neglect, lack of maintenance, accident, abnormal operation or improper installation or service; 2) abuse, i.e., bent metal columns, bent armature shafts, broken control cables, etc., accidents, modifications, misuse, excessive wear or damage caused by an owner's failure to provide reasonable and necessary installation or care; 3) use of an accessory or part not manufactured by MotorGuide/ Mercury; 4) alteration or removal of parts; 5) opening the lower unit (motor) by anyone other than the Factory Service Center will void this warranty.
7. This warranty will not apply to haul-out, launch, towing and storage, transportation charges and/or travel time, telephone or rental charges of any type, inconvenience, or loss of time or income, or other consequential damages.
8. We reserve the right to improve the design of any trolling motor without assuming any obligation to modify any trolling motor previously manufactured.
9. Serialized "Service-Repair" motors have a one (1) year warranty. Nonserialized "Service-Repair" electric trolling motors are NOT warranted. "Service-Repair" motor denotes a trolling motor sold by MotorGuide that may be "used," but has been inspected and may have had minor repairs. Original retail purchaser of a "Service-Repair" motor is the first purchaser of the motor after it is denoted as "Service-Repair." "Service-Repair" motors have a blue sticker on the battery cable and box denoting "Manufacturer Certified Service-Repair Motor."
10. TERMINATION OF COVERAGE: Warranty coverage may be terminated for repossessed product, or product purchased at auction, from a salvage yard, from a liquidator, from an insurance company, from unauthorized marine dealers or boatbuilders, or other third party entities.
11. ALL INCIDENTAL AND/OR CONSEQUENTIAL DAMAGES ARE EXCLUDED FROM THIS WARRANTY, WARRANTIES OF MERCHANTABILITY AND FITNESS ARE EXCLUDED FROM THIS WARRANTY, IMPLIED WARRANTIES ARE LIMITED TO THE LIFE OF THIS WARRANTY, SOME STATES DO NOT ALLOW LIMITATIONS ON HOW LONG AN IMPLIED WARRANTY LASTS OR THE EXCLUSION OR LIMITATION OF INCIDENTAL OR CONSEQUENTIAL DAMAGES, SO THE ABOVE LIMITATIONS OR EXCLUSIONS MAY NOT APPLY TO YOU. THIS WARRANTY GIVES YOU SPECIFIC LEGAL RIGHTS, AND YOU MAY ALSO HAVE OTHER LEGAL RIGHTS WHICH MAY VARY FROM STATE TO STATE.

GENERAL INFORMATION

Boater's Responsibilities

The operator (driver) is responsible for the correct and safe operation of the boat and safety of its occupants and general public. It is strongly recommended that each operator (driver) read and understand this entire manual before operating the trolling motor.

Be sure at least one additional person on board is instructed in the basic operation of the trolling motor in case the driver is unable to operate the boat.

Protecting People in the Water

WHILE YOU ARE TROLLING

It is very difficult for a person in the water to take quick action to avoid a boat heading in their direction, even at slow speeds.

Always slow down and exercise extreme caution any time you are boating in an area where there might be people in the water.

WHILE THE BOAT IS STATIONARY

⚠ WARNING
A spinning propeller, a moving boat, or any solid device attached to the boat can cause serious injury or death to swimmers. Stop the trolling motor immediately whenever anyone in the water is near your boat.

Shut off the trolling motor before allowing people to swim or be in the water near your boat.

Passenger Safety Message

Whenever the boat is in motion, observe the location of all passengers. A sudden reduction in boat speed, such as a sharp change of boat direction, could throw them off the boat.

Safe Boating Suggestions

In order to safely enjoy the waterways, familiarize yourself with local and other governmental boating regulations and restrictions, and consider the following suggestions.

Use flotation devices. It is the law to have an approved personal flotation device of suitable size for each person aboard and have it readily accessible.

GENERAL INFORMATION

Do not overload your boat. Most boats are rated and certified for maximum load (weight) capacities, refer to your boat capacity plate. If in doubt, contact your dealer or the boat's manufacturer.

Perform safety checks and required maintenance. Follow a regular schedule and ensure all repairs are made properly.

Never be under the influence of alcohol or drugs while boating (it is the law). Alcohol or drug use impairs your judgment and greatly reduces your ability to react quickly.

Passenger boarding. Stop the trolling motor whenever passengers are boarding or unloading.

Be alert. The operator of the boat is responsible by law to maintain a proper lookout by sight and hearing. The operator must have an unobstructed view particularly to the front. No passengers, load, or fishing seats should block the operators view when operating the boat.

Underwater hazards. Reduce speed and proceed with caution whenever navigating in shallow water.

Tripping hazards. To avoid a trip hazard, route all cables and wiring neatly and out of the way.

Report accidents. Boat operators are required by law to file a Boating Accident Report with their state boating law enforcement agency when their boat is involved in certain boating accidents. A boating accident must be reported if 1) there is loss of life or probable loss of life, 2) there is personal injury requiring medical treatment beyond first aid, 3) there is damage to boats or other property where the damage value exceeds $500.00 or 4) there is complete loss of the boat. Seek further assistance from local law enforcement.

PRODUCT OVERVIEW

PRODUCT OVERVIEW

Box Contents

Ref. No.	Qty.	Description
a	1	Steering assembly
b	2	Cable routing cable tie
c	2	Cable routing cable tie screws
d	4	Nylon lock nuts
e	4	Mounting washers
f	4	Rubber mounting spacers
g	4	Mounting screws
h	1	Bounce buster assembly
i	1	Mount
j	1	Gas spring
k	2	Cable routing clips
l	1	Tie down strap
m	2	Allen screws
n	2	Plastic retaining washers
o	1	T20 Torx bit
p	1	Self-tapping screw
q	1	Propeller pin
r	1	Propeller washer
s	1	Propeller nut
t	1	Katana propreller
u	1	T40 Torx bit

PRODUCT OVERVIEW

RECOMMENDED TOOL LIST

The following list of tools is recommended to aid in assembly and installation of the motor.

1. Drill
2. 6 mm (1/4 in.) drill bit
3. P3 screwdriver
4. 11 mm (7/16 in.) wrench
5. 6 mm (1/4 in.) Allen wrench
6. 13 mm (1/2 in.) wrench (optional bounce buster)
7. 4 mm (5/32 in.) Allen wrench (optional bounce buster)
8. Hacksaw (optional bounce buster)
9. 3 mm (7/64 in.) drill bit (optional foot pedal mounting)

PRODUCT OVERVIEW

Tour 82/Tour 109 MotorGuide Trolling Motor

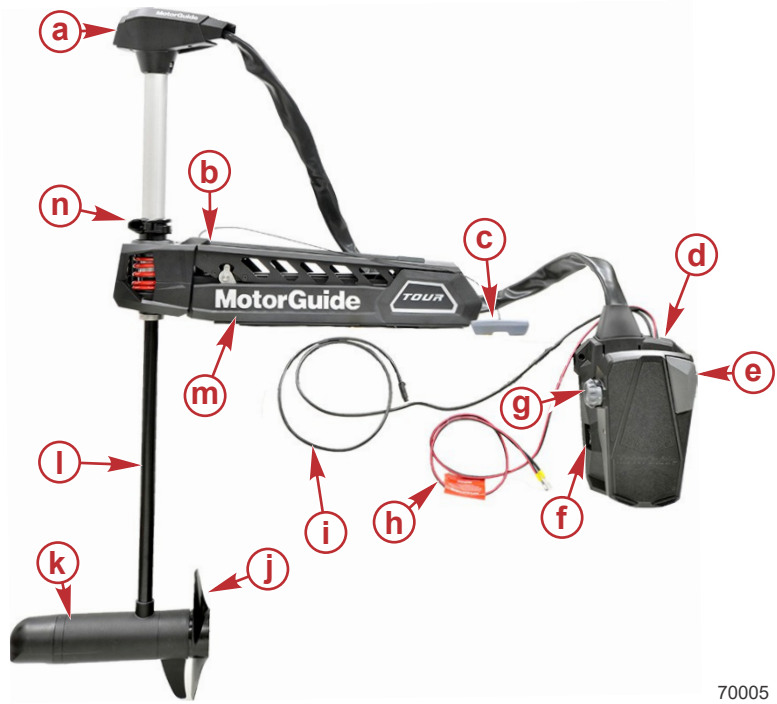

- **a -** Top housing
- **b -** Integrated bounce buster (optional)
- **c -** Stow/deploy handle
- **d -** Foot pedal
- **e -** Momentary on button
- **f -** 3-position switch
- **g -** Speed control knob
- **h -** Battery cables
- **i -** HD+ universal sonar cable (some models)
- **j -** Propeller
- **k -** Lower unit
- **l -** Composite column
- **m -** Mount
- **n -** Depth collar handle

PRODUCT OVERVIEW

Specifications

Model	Peak Thrust	Volts	Speeds Control/ Motor Direction	Integrated Sonar	Pinpoint GPS	Shaft Length
TR 82 45"	82	24 V	Digital Variable/ Forward	No	No	114.3 cm (45 in.)
TR 109 45"	109	36 V	Digital Variable/ Forward	No	No	114.3 cm (45 in.)
TR 82 45" HD+SNR	82	24 V	Digital Variable/ Forward	Yes	No	114.3 cm (45 in.)
TR 109 45" HD+SNR	109	36 V	Digital Variable/ Forward	Yes	No	114.3 cm (45 in.)

WIRING AND BATTERY INFORMATION

Wiring and Battery Information

⚠ WARNING

An operating or charging battery produces gas that can ignite and explode, spraying out sulfuric acid, which can cause severe burns. Ventilate the area around the battery and wear protective equipment when handling or servicing batteries.

⚠ WARNING

Performing service or maintenance without first disconnecting the battery can cause product damage, personal injury, or death due to fire, explosion, electrical shock, or unexpected motor starting. Always disconnect the battery cables from the battery before maintaining, servicing, installing, or removing motor components.

Recommended Practice and Procedures

IMPORTANT: Unplug the trolling motor after each use and when charging the battery.

- Do not use the main engine battery to power the trolling motor. Use a dedicated trolling motor battery or battery bank.
- Ensure that the batteries are enclosed and secured within a battery box to prevent accidental shorting of the battery terminals.
- Route the trolling motor wires on the opposite side of the boat from other boat wiring.
- Connect boat accessories directly to the main engine battery.
- Do not charge the trolling motor batteries while the trolling motor is in the deployed (down) position.

Battery Recommendations

- Use 12-volt, deep cycle marine batteries. The number of batteries required varies according to the model of your trolling motor. Refer to **Battery Connection**.
- MotorGuide trolling motors are also compatible with AGM (absorbent glass mat) and Marine Lithium Batteries.
- As a general rule, deep cycle batteries with a higher amp-hour rating or reserve capacity rating will provide longer run times and better performance.

IMPORTANT: A circuit breaker purchased for use with this trolling motor must be suitable for isolation in accordance with IEC 60947-2. This circuit breaker shall be capable of being locked in the OFF position.

- Install a manual reset circuit breaker in line with the trolling motor positive leads within 1.8 m (6 ft) of the batteries. These can be purchased from your local MotorGuide retailer or from www.motorguide.com.

WIRING AND BATTERY INFORMATION

- Do not extend the included 10-gauge battery cables more than 1.8 m (6 ft) for a total of 3 m (10 ft). If longer battery cables are required, MotorGuide offers accessory 8 mm² (8-gauge) battery cables.
- Use nylock nuts to secure the battery cables to their terminals. Using wing nuts to secure the battery cables can cause loose connections.
- Do not power any depth finders or fish finders from the trolling motor battery. Connecting electronic equipment to the trolling motor batteries can cause electrical interference. Any depth finders or fish finders must be powered from the engine starting or accessory battery.

Recommended MotorGuide Accessory Description
8-gauge battery cable and terminals with 50-amp manual reset circuit breaker
50-amp manual reset circuit breaker
60-amp manual reset circuit breaker

Battery Precautions

⚠ WARNING
An operating or charging battery produces gas that can ignite and explode, spraying out sulfuric acid, which can cause severe burns. Ventilate the area around the battery and wear protective equipment when handling or servicing batteries.

When charging batteries, an explosive gas mixture forms in each cell. Part of this gas escapes through holes in the vent plugs and may form an explosive atmosphere around the battery if ventilation is poor. This explosive gas may remain in or around the battery for several hours after it has been charged. Sparks or flames can ignite this gas and cause an internal explosion, which may shatter the battery.

The following precautions should be observed to prevent an explosion:

1. Keep flames away and do not smoke near batteries being charged or which have been charged recently.
2. Do not disconnect the battery cables while the trolling motor is operating, because a spark usually occurs at the point where a live circuit is broken. Always use care to prevent reverse polarization when connecting or disconnecting cable clamps on chargers. Poor connections are a common cause of electrical arcs, which cause explosions.
3. Do not reverse the polarity of battery terminal to cable connections.

Wire and Cable Routing

- Route the trolling motor wires on the opposite side of the boat from other boat wiring.
- The trolling motor should be connected to its own dedicated battery.
- Sensitive electronics, such as depth finders, should be connected to a separate battery.

WIRING AND BATTERY INFORMATION

- Marine engines should have their own dedicated starting battery.

Wire Color Code Abbreviations

Wire Color Abbreviations				
BLK	Black		BLU	Blue
BRN	Brown		GRA	Gray
GRN	Green		ORN	Orange
PNK	Pink		PPL	Purple
RED	Red		TAN	Tan
WHT	White		YEL	Yellow
LT	Light		DK	Dark

Battery Connection

⚠ WARNING

Before working around electrical system components, disconnect the battery cables from the battery to prevent injury or damage to the electrical system due to an accidental short circuit.

⚠ CAUTION

Disconnecting or connecting the battery cables in the incorrect order can cause injury from electrical shock or can damage the electrical system. Always disconnect the negative (-) battery cable first and connect it last.

NOTICE

Failure to operate the trolling motor within the recommended voltage specifications can cause product damage. Do not exceed the maximum supply voltage.

IMPORTANT: Refer to the decal on the head of the trolling motor to determine the voltage requirements of your trolling motor.

24-VOLT BATTERY CONNECTION

1. Starting with the negative (–) lead, disconnect the battery cables from the engine starting or accessory battery.
2. Install a 50-amp (good) or 60-amp (best) manual reset circuit breaker in line with the trolling motor power cable positive (+) lead and the trolling motor battery **B** positive (+) terminal.
3. Connect the positive (+) trolling motor lead to the positive (+) terminal on trolling motor battery **B**.
4. Connect a jumper wire (reference gray) between the negative (–) terminal on battery **B** to the positive (+) terminal on battery **A**.

WIRING AND BATTERY INFORMATION

IMPORTANT: The jumper wire should be the same wire gauge as the negative (–) and positive (+) power cables.

5. Connect the trolling motor negative (–) lead to the negative (–) terminal on battery **A**.
6. Starting with the positive (+) lead, reconnect the battery cables to the engine starting or accessory battery.

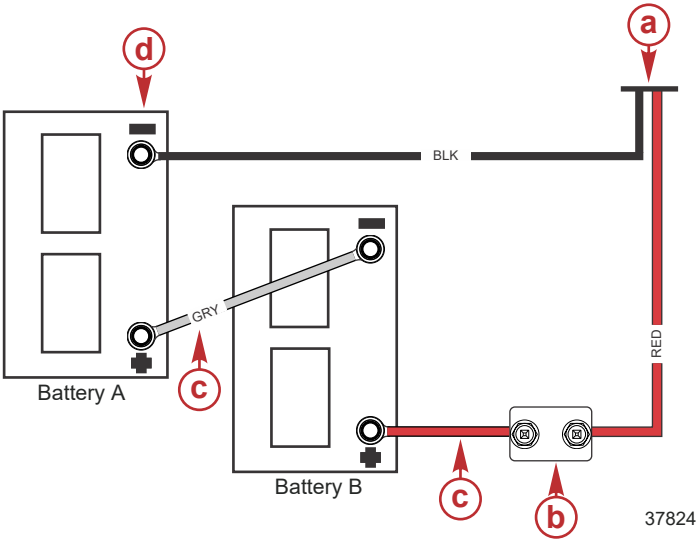

24-volt battery connection

a - Power cables to trolling motor
b - Manual reset circuit breaker
c - Jumper wire (not supplied)
d - Negative (–) battery terminal

36-VOLT BATTERY CONNECTION

1. Starting with the negative (–) lead, disconnect the battery cables from the engine starting or accessory battery.
2. Install a 50-amp (good) or 60-amp (best) manual reset circuit breaker in line with the trolling motor power cable positive (+) lead and the trolling motor battery **C** positive (+) terminal.
3. Connect the positive (+) trolling motor lead to the positive (+) terminal on trolling motor battery **C**.
4. Connect a jumper wire (reference gray) between the negative (–) terminal on battery **C** to the positive (+) terminal on battery **B**.

IMPORTANT: The jumper wire should be the same wire gauge as the negative (–) and positive (+) power cables.

5. Connect a jumper wire (reference gray) between the negative (–) terminal on battery **B** to the positive (+) terminal on battery **A**.
6. Connect the trolling motor negative (–) lead to the negative (–) terminal on battery **A**.
7. Starting with the positive (+) lead, reconnect the battery cables to the engine starting or accessory battery.

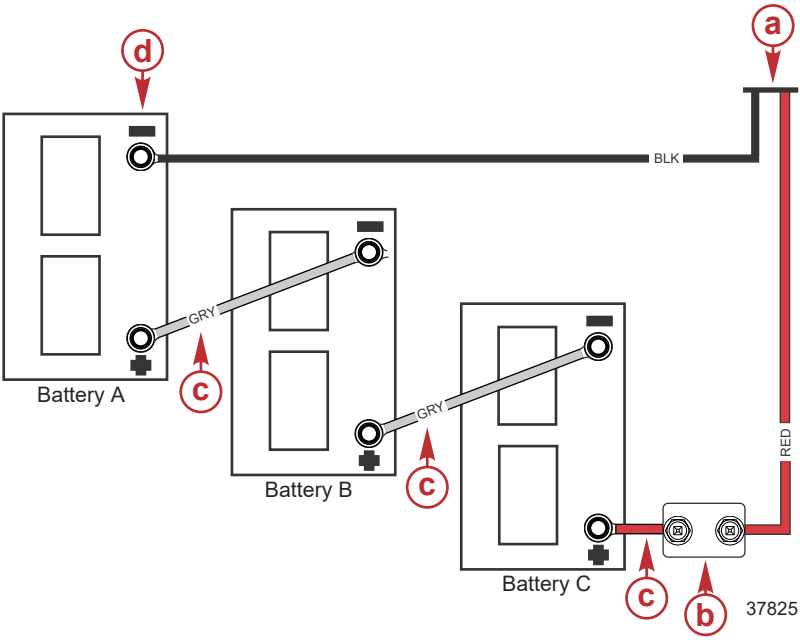

36-volt battery connection

a - Power cables to trolling motor
b - Manual reset circuit breaker
c - Jumper wire (not supplied)
d - Negative (–) battery terminal

Installing the Steering System on the Mount

IMPORTANT: Do not install the gas spring at this time.

1. Remove the mount from the packaging and leave the mount in the deployed position.

70055

2. Rest the mount on a level elevated surface such as a workbench.
3. Remove the steering assembly from the packaging.
4. Remove the plastic latch spacer from the mount.

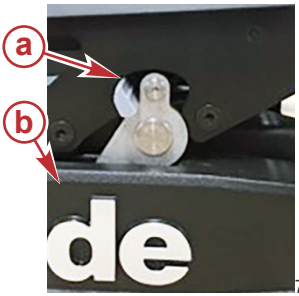

70112

a - Latch spacer
b - Mount

5. Remove the MotorGuide Tour mount accessory kit from the packaging.
6. Install the Allen screws on the steering system assembly.

7. Push the plastic retaining washers onto the Allen screws.

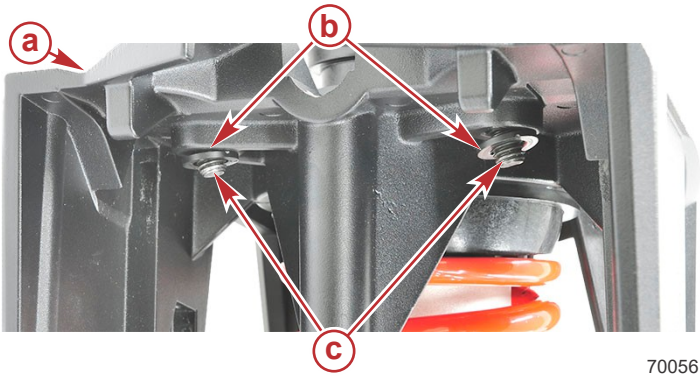

a - Steering assembly
b - Plastic retaining washers
c - Allen screws

IMPORTANT: Be careful not to pinch the stow/deploy handle and cable between the mounting bracket and the steering system.

8. Lower the steering assembly onto the mount vertically from above while aligning the keyways and the alignment keys.

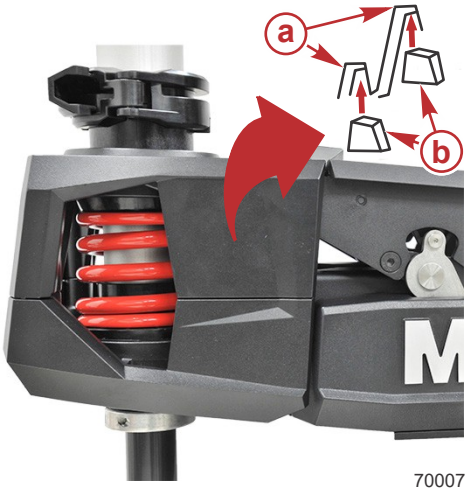

a - Keyway
b - Alignment key

IMPORTANT: Be certain the top of the 360 breakaway housing is aligned with the top of the mount.

Do not overtighten screws when installing 360 breakaway to mount.

NOTE: *The first Allen screw may come loose while tightening the second Allen screw.*

9. Tighten one of the two Allen screws to the specified torque. Then tighten the second Allen screw to the specified torque. When the second Allen screw is tightened, verify that the first Allen screw is still tightened to the specified torque.

Description	Nm	lb-in.	lb-ft
Allen screws (2)	16.3	144	–

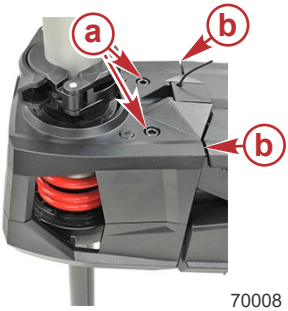

70008

a - Allen screws
b - 360 breakaway housing aligned with the top of the mount

Trolling Motor Installation

IMPORTANT: Mount the motor as far forward on the boat as possible.

Make sure there is nothing obstructing the stowing or deploying of the motor in and out of the water.

Make sure there are no obstructions underneath the mount.

1. Stow the fully assembled motor by pulling on the stow/deploy handle and raising the motor into the stowed position.

2. Install the tie-down strap through the slots in the mount, hook-and-loop side down, with the buckle facing toward the outside of the boat.

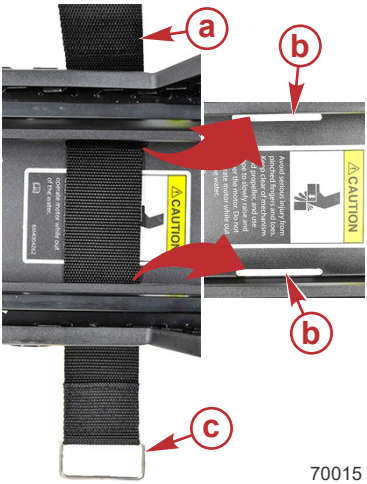

a - Tie-down strap
b - Slots
c - Buckle

IMPORTANT: Ensure that the bounce buster contacts the boat on a desired location prior to drilling holes and mounting the motor. Refer to Bounce Buster Installation.

IMPORTANT: A minimum of four mounting bolts are required to mount the trolling motor to the boat. Spread the mounting bolts as far apart as practical for the most secure mounting.

3. Place the trolling motor on the surface of the boat deck. Use the mount as a template to mark the locations of the front mounting holes and the rear mounting holes on the mount.

Installation Variations	
For a new boat installation	Use the exposed 7.6 cm (3 in.) hole pattern.
If replacing an existing trolling motor that uses a 3" hole pattern	Use the exposed 7.6 cm (3 in.) hole pattern in the base of the mount.

Installation Variations	
If replacing an existing trolling motor that uses a 4" hole pattern	Remove the four screws and starboard side cover plate from inside of the mount to uncover the 10.2 cm (4 in.) mounting hole pattern that matches the legacy MotorGuide trolling motor mounts.

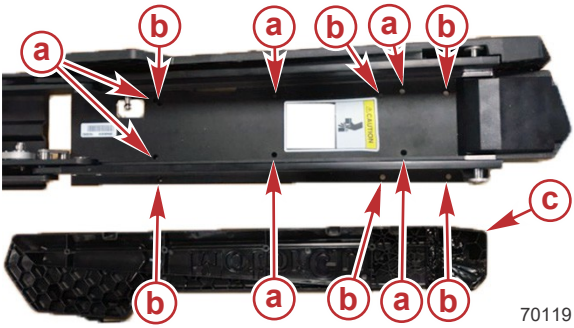

a - 7.6 cm (3 in.) pattern
b - 10.2 cm (4 in.) pattern
c - Starboard side cover

IMPORTANT: Use a countersink drill bit or a larger drill bit to countersink the holes on fiberglass boats to prevent cracking.

4. Drill the mounting holes with a 6 mm (1/4 in.) diameter drill bit. Remove any debris.
5. Insert the rubber isolators between the base of the mount and the boat mounting surface.
6. Install the stainless steel washers and nylon locknuts onto the mounting screws underneath the boat deck. Tighten the screws securely.

IMPORTANT: To prevent galling of the mounting hardware, do not use a drill to tighten the mounting screws.

If necessary, shim the rubber washers with 25 mm (1 in.) outside diameter stainless steel washers to create a level mounting surface.

The mount bracket must lay flush against the rubber isolators before being bolted to the deck or the mount will bind, making it difficult or impossible to unlatch.

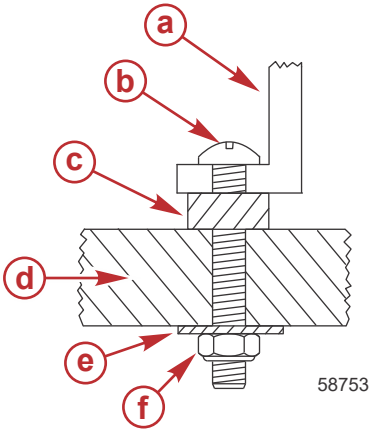

a - Mount bracket
b - Mounting screw
c - Rubber isolator
d - Deck
e - Washer
f - Nylon locknut

7. Once installed, the bracket should fasten securely and evenly, and release with a light, quick pull on the stow/deploy handle.

Permanent Foot Pedal Mounting—Optional

1. Determine a suitable location for the foot pedal with the trolling motor deployed and in the stowed position. Ensure that there are no obstructions beneath the boat deck that would interfere with the mounting screws, such as bulkheads or boat wiring.
2. Once a suitable location is chosen, mark the mounting holes, using the foot pedal as a template.

IMPORTANT: To prevent cracking, use a countersink drill bit or a larger drill bit to countersink the holes on fiberglass boats.

3. Use a 3 mm (7/64 in.) drill bit to drill holes through the boat deck.

NOTE: *Make sure the cables and cable sheathing are not kinked or twisted before mounting to the boat deck.*

4. Use three #8 x 2 in. stainless steel screws (not included) to secure the foot pedal to the boat deck.
5. Push the pedal into the full toe down position and install the two front screws on the foot pedal.

6. Push the pedal into the full heel down position and install the rear screw on the foot pedal.

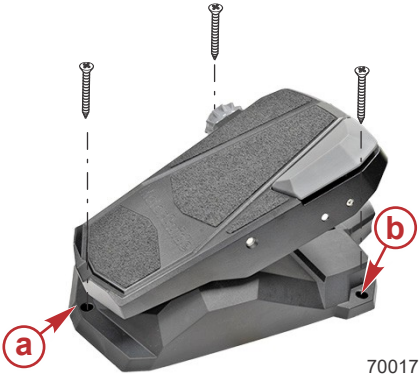

a - Rear screw
b - Front screws (2)

Bounce Buster Installation

1. Place the trolling motor in the stowed position.
2. Remove the bounce buster from the mounting accessory kit.

⚠ CAUTION

Avoid injury from parts flying into the passenger compartment of the boat. If the bounce buster is not correctly installed, the trolling motor can inadvertently deploy, which at planing speed could result in catastrophic failure of the trolling motor. Check that the stow latch fully engages after installation of the bounce buster.

3. Measure the distance between the boat deck and the outside surface of the mounting bracket.

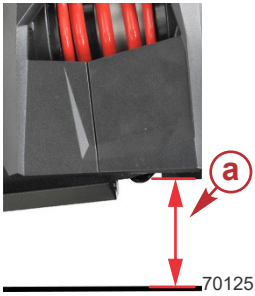

a - Distance between the boat deck and the outside surface of the mounting bracket.

4. Add 12.7 mm (1/2 in.) to the measured length (distance between the boat deck and the outside surface of the mounting bracket) taken in the previous step.

5. Cut the bounce buster to the new measurement on the unassembled end of the bounce buster.

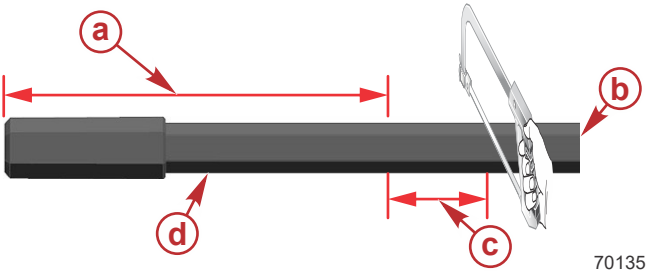

a - Distance between the boat deck and outside surface of the mounting bracket
b - Unassembled end
c - Add 12.7 mm (1/2 in.)
d - Bounce buster

6. Move the trolling motor into the deployed position.

NOTE: *Removing the steering system from the deployed mount will allow for easier tightening of the bounce buster screw.*

NOTE: *The bounce buster will loosen if not fully seated in the bounce buster pocket.*

7. Slide the unassembled end of the bounce buster into the bounce buster pocket.
8. Use a pencil or piece of tape to mark a line to indicate when bounce buster is fully seated in the bounce buster pocket. Mark the line 20 mm (0.79 in.) from the cut end of the bounce buster.
9. Insert and tighten the included bounce buster self-tapping screw into the bounce buster pocket.

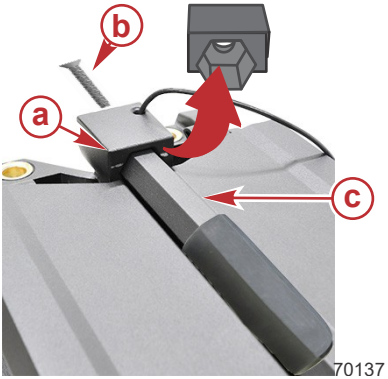

a - Bounce buster pocket
b - Self-tapping screw
c - Bounce buster

NOTE: *Install the steering system if removed. Refer to* ***Installing the Steering System on the Mount****.*

10. Stow the trolling motor.

NOTE: *Over adjusting of the fine adjustment screw may cause additional binding of the system. If over adjusted, the unit will be more difficult to release from the stowed position.*

11. Adjust the boot end of the bounce buster by removing the rubber boot, then loosen the jam nut by turning the screw counterclockwise to the desired length.
12. Tighten the jam nut to the base of the bounce buster followed by a clockwise turn.
13. Replace the rubber boot.

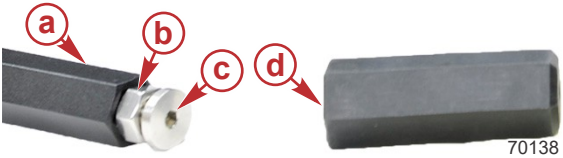

a - Bounce buster
b - Jam nut
c - Fine adjustment screw
d - Rubber boot

14. Verify in the stowed position that the stow latch is engaged by lifting up on the 360 breakaway without the use of the stow/deploy handle. If the stow latch is engaged, the mount will not release. If mount releases, repeat Step 11 - 13 until Step 14 can be verified.

Installing the Zero-G Gas Spring

1. Remove the gas spring from the Accessory Kit located in the packaging.
2. Rotate the motor into the stowed position until the ball end studs align with the gas spring end fittings.

IMPORTANT: Do not install the gas spring with the rod end up. This can result in premature gas spring failure.

3. Push or squeeze the rod end fitting of the gas spring on to the ball stud located on the base of the mount.
4. Repeat the previous step for the piston end fitting of the gas spring on to the ball stud located on the inner arm of the mount.

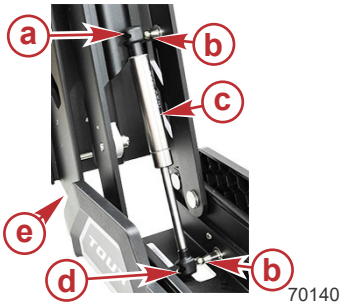

a - Piston end fitting
b - Ball stud
c - Gas spring
d - Rod end fitting
e - Mount

5. Deploy the motor fully to make sure the gas spring operates correctly.
6. Fully stow the motor.

Connecting the Sonar Display to the Trolling Motor

NOTE: *This procedure applies only to models equipped with integrated HD+ universal sonar.*

This sonar display connection procedure applies to trolling motor models with internal sonar that offer built-in 83/200 and 455/800 kHz HD+ universal sonar transducers compatible with Garmin®, Humminbird®, Lowrance®, and Raymarine® brand sonar displays. For compatibility with other sonar units, refer to www.motorguide.com.

The trolling motor is equipped with a MotorGuide HD+ universal sonar plug. Adapters are available to connect other brands of sonar displays to the trolling motor. Match the cable connector to the sonar port on the back of the sonar display. Some sonar multi-functional displays may require additional cables provided by the sonar manufacturer. Power up the unit to ensure that the sonar cable is connected securely.

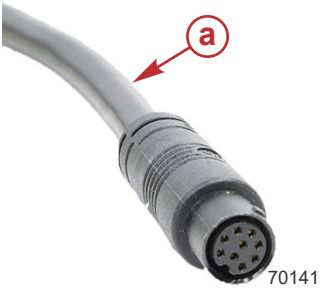

a - Harness—to nose cone sonar

Transducer adapter cables available from MotorGuide	Part Number
Lowrance® 9-Pin HD+ Sonar Adapter Cable	8M4004174
Lowrance® 7-Pin HD+ Sonar Adapter Cable	8M4004175
Humminbird® 11-Pin HD+ Sonar Adapter Cable	8M4004176
Humminbird® 7-Pin HD+ Sonar Adapter Cable	8M4004177
Garmin® 8-Pin HD+ Sonar Adapter Cable	8M4004178
Raymarine® HD+ Element Sonar Adapter Cable	8M4004179
Raymarine® HD+ Axiom Sonar Adapter Cable	8M4004180
MotorGuide 15' HD+ "Universal Sonar Extension Cable	8M4004245

Reducing Sonar Transducer Interference

Sonar transducers can be affected by interference, such as radio frequency interference (RFI) and electromagnetic interference (EMI). This interference can cause undesired operation of the sonar display. Refer to the following list to reduce sonar interference sources.

1. Lower the sonar sensitivity, also known as gain. Refer to the documents included with your sonar display.
   a. Change the sensitivity to an automatic setting.
   b. If the automatic setting does not reduce sonar interference, manually change the sensitivity to 55–65% of the maximum setting.
2. Verify that the transducer cable is not routed near any power cables.
3. Ensure that the positive (+) and negative (–) power cables are installed next to each other. This helps cancel any EMI.
4. Inspect the transducer cable for damage, nicks, or cuts. Replace the transducer cable if it is damaged.
5. Connect the sonar display to a separate accessory battery with only the sonar display connected. This will verify if the interference is coming from the power cables or the transducer cable.
   a. If the interference stops when the sonar display is connected to a separate accessory battery, inspect the boat wiring. Most likely, there is a problem with the ground (–) connection. All devices should have a common ground.
   b. If the interference continues, it is likely coming from the transducer or transducer cable.
6. Install a radio frequency (RF) choke onto the sonar display power cable.
7. Connect the sonar display to a different transducer.

Cable Routing Installation for External Accessories

⚠ CAUTION
Avoid injury caused by unintended motor deployment. An improperly secured motor may deploy during boat operation, causing damage and flying debris.

NOTE: *An unsecured stowed motor can inadvertently deploy while underway and cause damage. This damage can include broken components that may strike occupants of the boat. When stowing the motor always adjust the trolling motor depth down to the top half of the outer column to remove any slack from cables, ensure that the tie-down strap is secure and check that the motor is latched before powering or trailering the boat. Improper use or installation of external cables can interfere with latches and cause inadvertent deployment.*

The cable routing clips are intended to be used with externally routed trolling motor accessories that require cables to be routed on the outside of the shaft of the motor and alongside the mount for a seamless installation on the trolling motor.

1. Place the motor in the deployed position.

70022

2. After mounting the accessory of choice on the shaft or lower unit of the motor run the cable on the side of the shaft to the bottom of the 360 breakaway housing.
3. Attach the cable to the bottom of the 360 breakaway housing using the provided cable tie and screw found in the trolling motor accessory kit.
4. Route the cable from the bottom of the 360 breakaway housing to the top of the 360 breakaway housing using the cable tie and screw.
5. Insert the cables of the accessory into the front of the cable routing clip and out of the second slot on the opposite end of the clip.

IMPORTANT: The clip must be within 2.54 cm (1 in.) of the raised part of the side plate to avoid damage to the clip when stowing and deploying.

6. Insert the clip, open side up, into the overhang on the top of either side of the trolling motor mount.

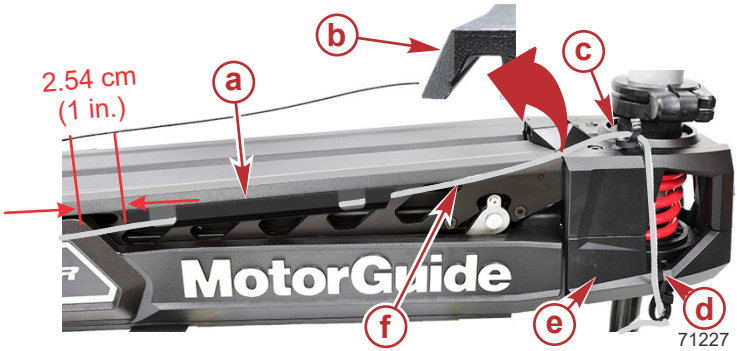

a - Cable routing clip
b - Overhang
c - Top of 360 breakaway housing
d - Bottom of 360 breakaway housing
e - 360 breakaway housing
f - Cable

Stowing the Trolling Motor

⚠ WARNING
Rotating propellers can cause serious injury or death. Never start or operate the motor out of water.

⚠ CAUTION
Moving parts, such as hinges and pivot points, can cause serious injury. Keep away from moving parts when stowing, deploying, or tilting the motor.

⚠ CAUTION
Avoid injury caused by unintended motor deployment. An improperly secured motor may deploy during boat operation, causing damage and flying debris.

TROLLING MOTOR INSTALLATION AND OPERATION

IMPORTANT: An improperly stowed motor can inadvertently deploy while underway and cause damage. This damage can include broken components that may strike occupants of the boat. When stowing the motor always adjust the trolling motor depth down to the top half of the outer column, ensure the tie-down strap is secure and check that the motor is latched before powering or trailering the boat.

Raise the trolling motor out of the water. While holding the release handle allow the trolling motor to fall into the stow latched position from the 90° position. Do not release the latch release handle until the stow latch is engaged.

1. Adjust the trolling motor depth down to the top half of the outer column. Refer to **Adjusting the Trolling Motor Depth**.
2. Firmly grasp the stow/deploy handle.
3. Snap the stow/deploy handle to deploy the latch hooks.
4. Continue to pull the stow/deploy handle to raise the lower unit onto the mount.

a - Top half of the outer column
b - Stow/deploy handle

5. Once the motor is in the stowed position, the stow latch engages to secure the trolling motor.

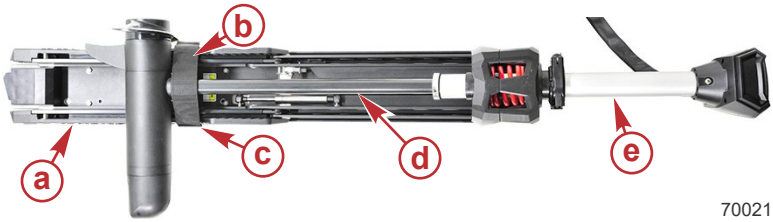

a - Mount
b - Tie-down strap
c - Buckle
d - Composite column
e - Motor

6. Position the tie-down strap over the composite column and through the buckle. Pull it tight, then secure the hook-and-loop backing together to secure the motor to the mount.

Deploying the Trolling Motor

⚠ WARNING

Rotating propellers can cause serious injury or death. Never start or operate the motor out of water.

⚠ CAUTION

Moving parts, such as hinges and pivot points, can cause serious injury. Keep away from moving parts when stowing, deploying, or tilting the motor.

⚠ CAUTION

Avoid possible serious injury from the motor dropping suddenly when adjusting the motor depth. Firmly grasp the motor shaft with one hand when raising or lowering the motor.

1. Release the tie-down strap that is securing the composite shaft to the mount.
2. Firmly grasp the stow/deploy handle.
3. Pull the latch stow/deploy handle to disengage the stow latch.

TROLLING MOTOR INSTALLATION AND OPERATION

IMPORTANT: Lower the trolling motor into the water. Release the stow/deploy handle allowing the gas spring to ease the motor into the deployed position.

a - Stow/deploy handle

70019

IMPORTANT: Make sure the Bulldog deploy latches are engaged before operating the motor.

4. Once the motor is in the deployed position, the deploy latch hooks will engage to secure the trolling motor.

70022

Adjusting the Trolling Motor Depth

⚠ CAUTION
Avoid possible serious injury from dropping the motor when adjusting the motor depth. Firmly grasp the motor shaft with one hand when raising or lowering the motor.

Adjust the depth of the motor to improve trolling motor performance in various water depths and wave conditions.

IMPORTANT: When adjusting the motor depth, ensure that the propeller blades are fully submerged 15–30 cm (6–12 in.) below the water surface to avoid cavitation.

1. Firmly grasp the outer column with one hand.
2. Pull open the cam lock arm until the outer column slides freely.
3. Raise or lower the outer column until the propeller blades are submerged 15–30 cm (6–12 in.) below the water surface.

IMPORTANT: Make sure there is nothing obstructing the operation of the cam lock lever.

4. Rotate the cam lock lever until the depth collar binds tightly on the outer column, then close the cam lock arm.

a - Cam lock lever
b - Outer column

Directional Indicator

The indicator provides directional information at a glance.

1. To make a right turn, press the toe down. The motor steers the boat to the right.
2. To forward direction, place the foot pedal in neutral position.
3. To make a left turn, press the heel down. The motor steers the boat to the left.

4. To reverse direction, continue to press the toe or heel all the way down to point the lower unit toward the back of the boat to move the boat in reverse.

a - Directional indicator
b - Right turn - toe down
c - Straight ahead - foot pedal in neutral position
d - Left turn - heel down

Speed Control

DIGITAL VARIABLE SPEED MOTORS

All Tour motors are available with digital variable speed control. Control the speed of your motor by rolling the speed control knob with your hand or foot until you reach the desired speed.

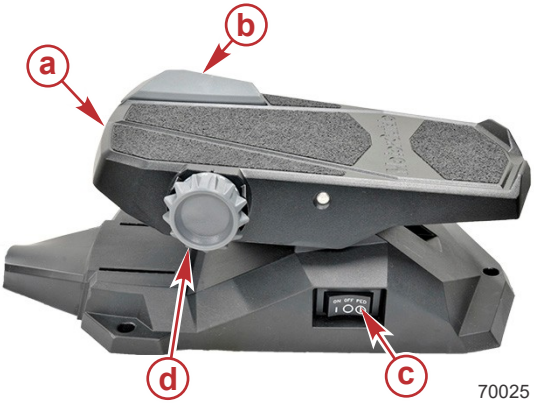

a - Foot pedal
b - Momentary switch
c - Power switch: continuous or momentary
d - Speed control knob

- **Speed control knob:** Digital variable speed settings are numbered 0–10, and allow you to select any speed from 0–10, and stop the motor.
- **Momentary switch:** The momentary switch is located on the top right corner of the foot pedal. The momentary switch works in conjunction with the on/off/pedal switch when it is in the pedal position. When the momentary switch is pressed, the motor will run at the selected speed as long as the switch is pressed.

MAINTENANCE

Trolling Motor Care

To keep your trolling motor in the best operating condition and retain its dependability, it is important that your trolling motor receive periodic inspections and maintenance. We urge you to keep it maintained properly to ensure that you and your passengers remain safe.

⚠ WARNING

Neglecting to inspect, maintain, or repair your trolling motor can result in product damage or serious injury or death. Do not perform maintenance or service on your trolling motor if you are not familiar with the correct service and safety procedures.

SELECTING REPLACEMENT PARTS

We recommend using original MotorGuide Certified replacement parts.

Inspection and Maintenance Schedule

BEFORE EACH USE

- Check the trolling motor for tightness on the deck mount.
- Check the tightness of the battery lead connections.
- Visually inspect for loose or corroded wiring connections.
- Check the tightness of the propeller nut.
- Check the propeller blades for damage.

AFTER EACH USE

- Disconnect the battery cables from the power source.
- Check the propeller and the propeller shaft for debris such as weeds and fishing line. Remove all debris.
- Rinse the trolling motor with clean water to remove dirt and dust that may scratch the surface.

EVERY 100 HOURS OF USE OR ANNUALLY

- Periodically lubricate all the pivot points. Refer to **Lubrication Points**.
- Check the tightness of bolts, nuts, and other fasteners.
- Inspect the battery. Refer to **Battery Inspection**.

STANDARD OPERATION

Complete the appropriate care instructions before and after each use to maintain the trolling motor performance. Operate the trolling motor in temperatures ranging from 0 °C (32 °F) to 50 °C (122 °F) and with relative humidity at 50 °C (122 °F) not to exceed 50%.

STORAGE PREPARATION

The major consideration in preparing the trolling motor for storage is to protect it from corrosion and damage caused by freezing of trapped water.

MAINTENANCE

Complete the appropriate care instructions to prepare the trolling motor for storage. Store the trolling motor in a dry location where it will not be affected by temperatures below -29 °C (-20 °F) and above 75 °C (167 °F).

IMPORTANT: Trolling motors stored in temperatures below 0 °C (32 °F) should be operated slowly for a minimum of 15 minutes before going above 30% operation.

Lubrication Points

NOTE: *Preferred lubricants can be obtained at any authorized MotorGuide or Mercury Marine service center.*

To reduce friction and quiet squeaks, lubricate the specified locations periodically with the following lubricants:

- Latch hooks - Tour Latch Grease

Tube Ref No.	Description	Where Used	Part No.
	Tour Latch Grease	Latch hooks	8M4005246

- Latch strikers - Tour Latch Grease

Tube Ref No.	Description	Where Used	Part No.
	Tour Latch Grease	Latch strikers	8M4005246

- Pivot pins - 4-Stroke 10W-30 Outboard Oil

Tube Ref No.	Description	Where Used	Part No.
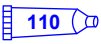	10W-30 4-Stroke Marine Engine Oil	Pivot pins	92-8M0078625

MAINTENANCE

IMPORTANT: Never use an aerosol lubricant to grease or oil any part of the unit. Many aerosol lubricants contain harmful propellants that can cause damage to various parts of the trolling motor.

a - Latch hooks
b - Latch strikers
c - Pivot pins

Battery Inspection

The battery should be inspected at periodic intervals to ensure proper trolling motor operation.

IMPORTANT: Read the safety and maintenance instructions which accompany your battery.

1. Ensure that the battery is secured to the vessel.
2. Ensure that the battery cable terminals are clean, tight, and correctly installed. For installation instructions, refer to **Battery Connection**.
3. Ensure that the battery is equipped with a battery box to prevent accidental shorting of the battery terminals.

Propeller Replacement

⚠ WARNING
Performing service or maintenance without first disconnecting the battery can cause product damage, personal injury, or death due to fire, explosion, electrical shock, or unexpected motor starting. Always disconnect the battery cables from the battery before maintaining, servicing, installing, or removing motor components.

REMOVING THE PROPELLER

1. Disconnect the power cables from the battery.

IMPORTANT: Remove the propeller nut with a wrench or a ratchet and socket. Using another tool may damage the propeller nut or shaft. If the propeller cannot be removed easily, use a rubber mallet to lightly tap the back side of the opposite blade. If the propeller cannot be removed, have the propeller removed by an authorized dealer.

NOTE: *Replace the propeller pin if it is bent.*

2. While holding the propeller blade with one gloved hand, use a 9/16 in. wrench or a ratchet to remove the propeller nut. Remove the propeller nut and washer.

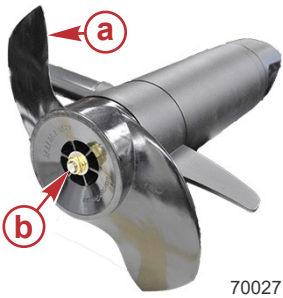

a - Propeller
b - Propeller nut and washer

INSTALLING THE PROPELLER

1. Rotate the motor shaft to insert the propeller pin horizontally.

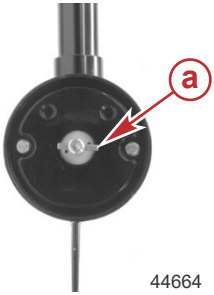

a - Propeller pin

2. Install the propeller onto the motor shaft by engaging the propeller onto the propeller pin.
3. Install the washer onto the propeller shaft, then install the propeller nut. Use a wrench or a socket and ratchet to tighten the propeller nut until it is snug, then tighten the nut another 1/4 turn.

Adjusting the Steering Cable Tension

⚠ WARNING

Neglecting to inspect, maintain, or repair your trolling motor can result in product damage or serious injury or death. Do not perform maintenance or service on your trolling motor if you are not familiar with the correct service and safety procedures.

The cable tension on the trolling motor is preset at the factory. With time and use, the steering cables may stretch slightly, requiring occasional adjustment. The following procedure explains how to adjust the steering cable tension.

Use care while adjusting the steering cable tension. Improper steering cable tension, whether too loose or too tight will cause premature steering cable wear and or loss of steering control.

1. Remove the foot pedal from the boat deck if it has been secured with screws.
2. Adjust the steering cable tension by turning the steering cable tension screw clockwise to increase tension, and counterclockwise to decrease tension. Adjust the steering cable tension screw to the specified torque value.

Description	Nm	lb-in.	lb-ft
Steering cable tension screw	1.7	15	–

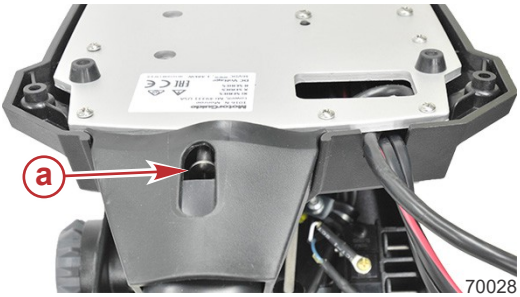

Bottom of foot pedal

a - Steering cable tension screw

TROUBLESHOOTING

Trolling Motor Performance

Symptom	Possible Cause	Resolution
Loss of power	Weak battery	Refer to **Wiring and Battery Information**.
	Loose or corroded battery connections	
	Propeller is loose, damaged, or off-balance	Refer to **Maintenance**.
	Wiring or electrical connection faulty	Wire gauge from the battery to the trolling motor is insufficient. Six-gauge wire (13 mm²) is recommended.
	Weeds, fishing line, or debris wrapped around propeller	Remove weeds, fishing line, or debris from propeller.
Excessive noise, vibration	Motor shaft is bent	Refer to **Warranty Information**.
	Propeller is loose, damaged, or off-balance	Refer to **Maintenance**.
Motor failure (all speeds)	Weak battery	Refer to **Wiring and Battery Information**.
	Loose or corroded battery connections	
	Electrical	Check the connector for a loose or damaged connection. Refer to **Wiring and Battery Information**.
	Fuse or circuit breaker is open	Locate and correct the cause of the overload. Then replace the fuse or reset the circuit breaker.
Motor failure (one or more speeds)	Propeller is loose, damaged, or off-balance	Refer to **Maintenance**.
	Wiring or electrical connection faulty.	Refer to **Warranty Information**.
Difficulty removing propeller	Bent propeller pin	Hold one blade and lightly tap the opposite blade with a rubber mallet.
		Use a putty knife on both sides of the propeller to apply equal pressure.
	Bent armature shaft	Refer to service center.

TROUBLESHOOTING

Symptom	Possible Cause	Resolution
Mount bracket squeaks	Lock hooks, latch strikers or pivot pins need lubrication	Refer to **Lubrication Points**.
	Steering system screws have loosened	Tighten steering system screws. Refer to **Installing the Steering System on the Mount.**
Mount binds when attempting to stow or deploy unit	Dirt/debris buildup on latches or strikers	Carefully clean and reapply grease to all latches and striker locations. Refer to the **Lubrication Points**.

Resetting Motor After Unexpected Stop

The trolling motor may stop unexpectedly due to propeller stall, overheating, bent propeller shaft, or loose or corroded battery connections.

If the trolling motor stops unexpectedly, follow the steps below in order to safely restart the trolling motor.

1. Adjust the speed knob to speed 0.
2. Remove power from the trolling motor.
3. Place the trolling motor in the stowed position.
4. Examine the trolling motor for unexpected binding or debris on the propeller shaft.
5. Examine the wiring to the trolling motor for loose connections or corrosion.
6. Wait 30 seconds and then restart the trolling motor.
7. Place the trolling motor in the deployed position.
8. Use the trolling motor in normal operation.

OWNER SERVICE ASSISTANCE

Mercury Marine Service Offices

For assistance, call, fax, or write. Please include your daytime telephone number with mail and fax correspondence.

United States, Canada		
Telephone	English +1 920 929 5040 Français + 905 636 4751	Mercury Marine W6250 Pioneer Road P.O. Box 1939 Fond du Lac, WI 54936-1939
Fax	English +1 920 929 5893 Français +1 905 636 1704	
Website	www.mercurymarine.com	

Australia, Pacific		
Telephone	+61 3 9791 5822	Brunswick Asia Pacific Group 41–71 Bessemer Drive Dandenong South, Victoria 3175 Australia
Fax	+61 3 9706 7228	

Europe, Middle East, Africa		
Telephone	+32 87 32 32 11	Brunswick Marine Europe Parc Industriel de Petit-Rechain B-4800 Verviers, Belgium
Fax	+32 87 31 19 65	

Mexico, Central America, South America, Caribbean		
Telephone	+1 954 744 3500	Mercury Marine 11650 Interchange Circle North Miramar, FL 33025 U.S.A.
Fax	+1 954 744 3535	

Asia, Singapore, Japan		
Telephone	+65 68058100	Mercury Marine Singapore Pte Ltd 11 Changi South Street 3, #01-02 Singapore, 486122
Fax	+65 68058138	