Operator Manual

Our energy working for you.™

Cummins Power Generation

Generator Set

Ford V-10 6.8L Engine with PowerCommand® 2100 Control

GGHG (Spec L)
GGHH (Spec L)

English
Original Instructions

9-2011

A034G614 (Issue 3)

cummins

Table of Contents

1. IMPORTANT SAFETY INSTRUCTIONS 1
   1.1 Warning, Caution and Note Styles Used In This Manual 1
   1.2 General Information 1
      1.2.1 General Safety Precautions 1
   1.3 Generator Set Safety Code 2
      1.3.1 Moving Parts Can Cause Severe Personal Injury Or Death 3
      1.3.2 Positioning of Generator Set 3
      1.3.3 Positioning of Generator Set - Open Sets 3
   1.4 Electrical Shocks and Arc Flashes Can Cause Severe Personal Injury or Death 3
      1.4.1 AC Supply and Isolation 4
   1.5 Fuel And Fumes Are Flammable 4
      1.5.1 Gaseous Fuels 5
      1.5.2 Spillage 5
      1.5.3 Fluid Containment 5
      1.5.4 Do Not Operate in Flammable and Explosive Environments 5
   1.6 Exhaust Gases Are Deadly 5
      1.6.1 Exhaust Precautions 6

2. INTRODUCTION 7
   2.1 About This Manual 7
   2.2 Schedule of Abbreviations 7
   2.3 Related Literature 8
      2.3.1 Further Information - Literature 9
   2.4 After Sales Services 9
      2.4.1 Maintenance 9
      2.4.2 Warranty 9
      2.4.3 How to Obtain Service 9

3. SYSTEM OVERVIEW 11
   3.1 Generator Set Identification 11
      3.1.1 Nameplate 11
   3.2 Generator Set Components 11
   3.3 Generator Set Rating 12
   3.4 Engine 13
      3.4.1 Engine Data 14
   3.5 Sensors 14
   3.6 Heaters 15
      3.6.1 Heater Supply and Isolation 15
   3.7 Mains (Utility) Powered Battery Charger 15
   3.8 Alarm Module 15
   3.9 Coolant Heater 16
   3.10 System Options 16

3.10.1 Normal Duty Air Cleaner 16
3.10.2 PowerCommand Universal Annunciator 17

4. CONTROL SYSTEM - PCC 2100 19
4.1 Control System Description 19
4.2 Control Panel Power On/Off Modes 20
4.2.1 Power On Mode 20
4.2.2 Screen Saver Mode 21
4.2.3 Sleep/Awake Mode 21
4.3 Battle Short Mode 21
4.4 Front Panel 22
4.4.1 Digital Display 23
4.4.2 Display Menu Selection Button 23
4.4.3 Home Button 24
4.4.4 Previous Main Menu Button 24
4.4.5 Emergency Stop Button 24
4.4.6 Running Indicator 25
4.4.7 Remote Start Indicator 25
4.4.8 Not in Auto 25
4.4.9 Analog AC Metering Panel 25
4.4.10 Shutdown Status 25
4.4.11 Warning Status Indicator 25
4.4.12 Fault Acknowledgement/Reset Button 26
4.4.13 Panel Lamp and Lamp (LED) Test Button 26
4.4.14 Manual Run/Stop Button 26
4.4.15 O/Manual/Auto Switch 26
4.4.16 Configurable Indicators 26
4.5 Control Menus 27
4.5.1 Main Menus 27
4.5.2 Adjusting Default Settings 29
4.5.3 System Messages 30
4.5.4 Controller Configuration Menu 30
4.5.5 Engine Menu 31
4.5.6 Alternator Menu 34
4.5.7 Adjust Menu 35
4.5.8 Faults Menu 38
4.5.9 System Menu 39
4.5.10 History Menu 40
4.5.11 About Menu 42

5. OPERATION - PCC 2100 45
5.1 Safety 45
5.2 Introduction 45
5.3 Maintenance 46
5.4 Starting 46
5.4.1 Starting - Safety Consideration 46
5.4.2 Operator’s Pre-start Checks 46

5.4.3 Starting at the Control Panel (Manual Mode) 47
5.4.4 Starting From a Remote Location (PTC or Remote Start Signal) - Auto Mode 48
5.4.5 Cold Starting With Loads 52
5.5 Stopping 52
5.5.1 Emergency Stop 52
5.5.2 Stopping at Control Panel (Manual Mode) 52
5.5.3 Stopping from Remote Location (Remote Stop Signal) - Auto Mode 53
5.6 Operating Recommendations 53
5.6.1 Running-in 53
5.6.2 No Load Operation 53
5.6.3 Exercise Period 53
5.6.4 Low Operating Temperature 54
5.6.5 High Operating Temperature 54

6. MAINTENANCE 55
6.1 Locking the Generator Set Out of Service 56
6.1.1 Immobilizing for Safe Working 56
6.1.2 Periodic Maintenance 57
6.2 Daily or Refueling Maintenance Procedures 60
6.2.1 General Information 60
6.2.2 Engine Operation Report 60
6.3 Cooling System 61
6.3.1 Coolant Level - Check 61
6.3.2 Cooling Fan - Inspect 62
6.3.3 Drive Belt - Inspection 63
6.3.4 Radiator - Check 64
6.4 Engine Oil – Level Check 64
6.5 Fluid Containment 65
6.6 Hoses and Fuel Lines - Check 65
6.7 Normal Duty Air Cleaner 66
6.7.1 Air Cleaner Element Removal 66
6.7.2 Air Cleaner Element Installation 67
6.8 Exhaust System 68
6.9 Generator Set Output - AC Electric System 68
6.10 DC Electrical System 69
6.11 Lead Acid Batteries 69
6.11.1 Storage 69
6.11.2 Safety Precautions 70
6.11.3 Battery Commissioning 70
6.11.4 Battery Maintenance 72
6.11.5 Electrolyte - Specific Gravity and Temperature 74
6.11.6 Battery Replacement 76
6.11.7 Electrolyte Levels and Bench Charging Rates 76
6.11.8 Battery Fault Finding 77

7. TROUBLESHOOTING 79
7.1 Control System 79

7.2 Safety Considerations 79
7.3 Fault Finding 80
7.4 Status Indicators - PCC 2100 80
7.4.1 Running Indicator 80
7.4.2 Remote Start Indicator 81
7.4.3 Not in Auto 81
7.4.4 Configurable Indicators 81
7.4.5 Shutdown Status 81
7.4.6 Warning Status Indicator 81
7.5 Fault/Status Codes - PCC 2100 81
7.5.1 Fault/Status Codes 81
7.5.2 Fault Messages 82
7.5.3 Fault Acknowledgement 82
7.5.4 Category A Fault Codes 83
7.5.5 Category B Fault Codes 83
7.5.6 Category C Fault Codes 83
7.5.7 Category D Fault Codes 83
7.5.8 Category E Fault Codes 83
7.5.9 PCC 2100 Fault Codes Table 83
7.5.10 Warning and Shutdown Codes 85
7.6 Line Circuit Breaker 88

8. BATTERY CHARGER 89
8.1 Battery Charger - 15 Amp @ 12 Volt and 12 Amp @ 24 Volt 89
8.1.1 Control Panel 90
8.1.2 Battery Charger Configuration 91
8.1.3 Battery Temperature Sensor 91
8.2 Circuits 92

9. MANUFACTURING FACILITIES 93
9.1 How to Obtain Service 93
9.1.1 Locating Your Distributor 93

1 Important Safety Instructions

SAVE THESE INSTRUCTIONS - This manual contains important instructions that should be followed during installation and maintenance of the generator set and batteries.

Safe and efficient operation can be achieved only if the equipment is properly operated and maintained. Many accidents are caused by failure to follow fundamental rules and precautions.

1.1 Warning, Caution and Note Styles Used In This Manual

The following safety styles and symbols found throughout this manual indicate potentially hazardous conditions to the operator, service personnel or the equipment.

DANGER: Warns of a hazard that will result in severe personal injury or death.

WARNING: Warns of a hazard that may result in severe personal injury or death.

CAUTION: Warns of a hazard or an unsafe practice that can result in product or property damage.

NOTE: A short piece of text giving information that augments the current text.

1.2 General Information

This manual should form part of the documentation package supplied by Cummins Power Generation with specific generator sets. In the event that this manual has been supplied in isolation please contact your authorized distributor.

NOTE: It is in the Operator's interest to read and understand all Warnings and Cautions contained within the documentation relevant to the generator set, its operation and daily maintenance.

1.2.1 General Safety Precautions

WARNING: Coolants under pressure have a higher boiling point than water. DO NOT open a radiator or heat exchanger pressure cap while the engine is running. Allow the generator set to cool and bleed the system pressure first. To prevent severe scalding, let the engine cool down before removing the coolant pressure cap. Turn the cap slowly, and do not open it fully until the pressure has been relieved.

WARNING: Used engine oils have been identified by some state or federal agencies as causing cancer or reproductive toxicity. When checking or changing engine oil, take care not to ingest, breathe the fumes, or contact used oil.

NOTE: Keep multi-class ABC fire extinguishers handy. Class A fires involve ordinary combustible materials such as wood and cloth; Class B fires involve combustible and flammable liquid fuels and gaseous fuels; Class C fires involve live electrical equipment. (ref. NFPA No. 10 in applicable region)

CAUTION: Make sure that rags are not left on or near the engine.

CAUTION: Make sure the generator set is mounted in a manner to prevent combustible materials from accumulating under the unit.

CAUTION: Remove all unnecessary grease and oil from the unit. Accumulated grease and oil can cause overheating and engine damage which present a potential fire hazard.

CAUTION: Keep the generator set and the surrounding area clean and free from obstructions. Remove any debris from the set and keep the floor clean and dry.

WARNING: Do not work on this equipment when mentally or physically fatigued, or after consuming any alcohol or drug that makes the operation of equipment unsafe.

WARNING: Substances in exhaust gases have been identified by some state or federal agencies as causing cancer or reproductive toxicity. Take care not to breath, ingest, or come into contact with exhaust gases.

WARNING: Do not store any flammable liquids, such as fuel, cleaners, oil, etc., near the generator set. A fire or explosion could result.

WARNING: Wear hearing protection when going near an operating generator set.

WARNING: To prevent serious burns, avoid contact with hot metal parts such as the radiator, the turbo charger, and the exhaust system.

WARNING: Use personal protective equipment when maintaining or installing the generator set. Examples of personal protective equipment include but are not limited to: safety glasses, protective gloves, hard hats, steel-toed boots, and protective clothing.

WARNING: Do not use starting fluids that evaporate. They are highly explosive.

CAUTION: Do not step on the generator set when entering or leaving the generator room. Parts can bend or break leading to electrical shorts, or to fuel, coolant, or exhaust leaks.

CAUTION: To prevent accidental or remote starting while working on the generator set, disconnect the negative (-) battery cable at the battery.

WARNING: Ethylene glycol, used as engine coolant, is toxic to humans and animals. Clean up spills and dispose of used engine coolant in accordance with local environmental regulations.

WARNING: Moving parts can cause severe personal injury or death. Hot exhaust parts can cause severe burns. Make sure all protective guards are properly in place before starting the generator set.

1.3 Generator Set Safety Code

Before operating the generator set, read the manuals and become familiar with them and the equipment. **Safe and efficient operation can be achieved only if the equipment is properly operated and maintained.** Many accidents are caused by failure to follow fundamental rules and precautions.

WARNING: Improper operation and maintenance can lead to severe personal injury or loss of life and property by fire, electrocution, mechanical breakdown, or exhaust gas asphyxiation. Read and follow all Safety Precautions, Warnings and Cautions throughout this manual and the documentation supplied with your generator set.

WARNING: Lifting and repositioning of the generator set must only be carried out using suitable lifting equipment, shackles, and spreader bars, in accordance with local guidelines and legislation, by suitably trained and experienced personnel. Incorrect lifting can result in severe personal injury, death and/or equipment damage. For more information, contact your authorized distributor.

1.3.1 Moving Parts Can Cause Severe Personal Injury Or Death

- Keep your hands, clothing, and jewelry away from moving parts.
- Before starting work on the generator set, disconnect the battery charger from its AC source, then disconnect the starting batteries, negative (**–**) cable first. This will prevent accidental starting.
- Make sure that fasteners on the generator set are secure. Tighten supports and clamps; keep guards in position over fans, drive belts, etc.
- Do not wear loose clothing or jewelry in the vicinity of moving parts or while working on electrical equipment. Loose clothing and jewelry can become caught in moving parts.
- If any adjustments must be made while the unit is running, use extreme caution around hot manifolds, moving parts, etc.

1.3.2 Positioning of Generator Set

The area for positioning the set should be adequate and level and the area immediately around the set must be free of any flammable material.

WARNING: On an enclosed generator set, the canopy doors must be locked before re-positioning and they must remain locked during transportation and sitting.

1.3.3 Positioning of Generator Set - Open Sets

The area for positioning the set should be adequate and level and the area immediately around the set must be free of any flammable material.

1.4 Electrical Shocks and Arc Flashes Can Cause Severe Personal Injury or Death

WARNING: Any work with exposed energized circuits with potentials of 50 Volts AC or 75 Volts DC or higher poses a significant risk of electrical shock and electrical arc flash. These silent hazards can cause severe injuries or death. Refer to standard NFPA 70E or equivalent safety standards in corresponding regions for details of the dangers involved and for the safety requirements.

Guidelines to follow when working on de-energized electrical systems:

- Use proper PPE. Do not wear jewelry and ensure that any conductive items are removed from pockets as these items can fall into equipment and the resulting short circuit can cause shock or burning. Refer to standard NFPA 70E for PPE standards.
- De-energize and lockout/tagout electrical systems prior to working on them. Lockout/Tagout is intended to prevent injury due to unexpected start-up of equipment or the release of stored energy. Please refer to the lockout/tagout section for more information.

- De-energize and lockout/tagout all circuits and devices before removing any protective shields or making any measurements on electrical equipment.
- Follow all applicable regional electrical and safety codes.

Guidelines to follow when working on energized electrical systems:

NOTE: **It is the policy of Cummins Inc. to perform all electrical work in a de-energized state. However, employees or suppliers may be permitted to occasionally perform work on energized electrical equipment only when qualified and authorized to do so and when troubleshooting, or if de-energizing the equipment would create a greater risk or make the task impossible and all other alternatives have been exhausted.**

NOTE: **Exposed energized electrical work is only allowed as per the relevant procedures and must be undertaken by a Cummins authorized person with any appropriate energized work permit for the work to be performed while using proper PPE, tools and equipment. In summary:**

- **Do not tamper with or bypass interlocks unless you are authorized to do so.**
- **Understand and assess the risks - use proper PPE. Do not wear jewelry and ensure that any conductive items are removed from pockets as these items can fall into equipment and the resulting short circuit can cause shock or burning. Refer to standard NFPA 70E for PPE standards.**
- **Ensure that an accompanying person who can undertake a rescue is nearby.**

1.4.1 AC Supply and Isolation

It is the sole responsibility of the customer to provide AC power conductors for connection to load devices and the means to isolate the AC input to the terminal box; these must comply to local electrical codes and regulations. Refer to the wiring diagram supplied with the generator set.

NOTE: **Local electrical codes and regulations (for example BS EN 12601:2001) may require the installation of a disconnect means for the generator set, either on the generator set or where the generator set conductors enter a facility.**

NOTE: **The AC supply must have the correct over current and earth fault protection according to local electrical codes and regulations. This equipment must be earthed (grounded).**

The disconnecting device is not provided as part of the generator set, and Cummins Power Generation accepts no responsibility for providing the means of isolation.

1.5 Fuel And Fumes Are Flammable

Fire, explosion, and personal injury or death can result from improper practices.

- DO NOT fill fuel tanks while the engine is running, unless the tanks are outside the engine compartment. Fuel contact with hot engine or exhaust is a potential fire hazard.
- DO NOT permit any flame, cigarette, pilot light, spark, arcing equipment, or other ignition source near the generator set or fuel tank.

- Fuel lines must be adequately secured and free of leaks. Fuel connection at the engine should be made with an approved flexible line. Do not use copper piping on flexible lines as copper will become brittle if continuously vibrated or repeatedly bent.
- Be sure all fuel supplies have a positive shutoff valve.
- Be sure the battery area has been well-ventilated prior to servicing near it. Lead-acid batteries emit a highly explosive hydrogen gas that can be ignited by arcing, sparking, smoking, etc.

1.5.1 Gaseous Fuels

- Natural gas is lighter than air, and will tend to gather under hoods. Propane is heavier than air, and will tend to gather in sumps or low areas. NFPA code requires all persons handling propane to be trained and qualified.

1.5.2 Spillage

Any spillage that occurs during fueling or during oil top-off or oil change must be cleaned up before starting the generator set.

1.5.3 Fluid Containment

If fluid containment is incorporated into the bedframe, it must be inspected at regular intervals. Any liquid present should be drained out and disposed of in line with local health and safety regulations. Failure to perform this action may result in spillage of liquids which could contaminate the surrounding area.

Any other fluid containment area must also be checked and emptied, as described above.

NOTE: Where spillage containment is not part of a Cummins supply, it is the responsibility of the installer to provide the necessary containment to prevent contamination of the environment, especially water courses/sources.

1.5.4 Do Not Operate in Flammable and Explosive Environments

Flammable vapor can cause an engine to overspeed and become difficult to stop, resulting in possible fire, explosion, severe personal injury and death. Do not operate a generator set where a flammable vapor environment can be created by fuel spill, leak, etc., unless the generator set is equipped with an automatic safety device to block the air intake and stop the engine. The owners and operators of the generator set are solely responsible for operating the generator set safely. Contact your authorized Cummins Power Generation distributor for more information.

1.6 Exhaust Gases Are Deadly

- Provide an adequate exhaust system to properly expel discharged gases away from enclosed or sheltered areas and areas where individuals are likely to congregate. Visually and audibly inspect the exhaust daily for leaks per the maintenance schedule. Make sure that exhaust manifolds are secured and not warped. Do not use exhaust gases to heat a compartment.
- Be sure the unit is well ventilated.

WARNING: Engine exhaust and some of its constituents are known to the state of California to cause cancer, birth defects, and other reproductive harm.

1.6.1 Exhaust Precautions

WARNING: Exhaust pipes and charge air pipes are very hot and they can cause severe personal injury or death from direct contact or from fire hazard.

WARNING: Hot exhaust gas can cause burns resulting in severe personal injury.

The exhaust outlet may be sited at the top or bottom of the generator set. Make sure that the exhaust outlet is not obstructed. Personnel using this equipment must be made aware of the exhaust position. Position the exhaust away from flammable materials - in the case of exhaust outlets at the bottom, make sure that vegetation is removed from the vicinity of the exhaust.

WARNING: Inhalation of exhaust gases can result in serious personal injury or death. Be sure deadly exhaust gas is piped outside and away from windows, doors, or other inlets to buildings. Do not allow to accumulate in habitable areas.

WARNING: Contaminated insulation is a fire risk which can result in severe personal injury.

The exhaust pipes may have some insulating covers fitted. If these covers become contaminated by fuel or oil, they must be replaced before the generator set is run.

To minimize the risk of fire, make sure the following steps are observed:

- Make sure that the engine is allowed to cool thoroughly before topping off the oil or draining the fuel filters.
- Clean the exhaust pipe thoroughly.

2 Introduction

2.1 About This Manual

The purpose of this manual is to provide the users with sound, general information. It is for guidance and assistance with recommendations for correct and safe procedures. Cummins Power Generation (CPG) cannot accept any liability whatsoever for problems arising as a result of following recommendations in this manual.

The information contained within the manual is based on information available at the time of going to print. In line with Cummins Power Generation policy of continuous development and improvement, information may change at any time without notice. The users should therefore make sure that before commencing any work, they have the latest information available.

Users are respectfully advised that, in the interests of good practice and safety, it is their responsibility to employ competent persons to carry out any installation work. Consult your authorized distributor for further installation information. It is essential that the utmost care is taken with the application, installation, and operation of any engine due to their potentially hazardous nature. Careful reference should also be made to other Cummins Power Generation literature. A generator set must be operated and maintained properly if you are to expect safe and reliable operation.

Should you require further assistance, contact your authorized distributor.

2.2 Schedule of Abbreviations

This list is not exhaustive. For example, it does not identify units of measure or acronyms that appear only in parameters, event/fault names, or part/accessory names.

AmpSentry and InPower are trademarks of Cummins Inc. PowerCommand is a registered trademark of Cummins Inc.

ACRONYM	DESCRIPTION	ACRONYM	DESCRIPTION
AC	Alternating Current	LED	Light-emitting Diode
AMP	AMP, Inc., part of Tyco Electronics	Mil Std	Military Standard
ASTM	American Society for Testing and Materials (ASTM International)	MMHG	Millimeters of Mercury
ATS	Automatic Transfer Switch	NC	Not Connected
AVR	Automatic Voltage Regulator	NC	Normally Closed
AWG	American Wire Gauge	NFPA	National Fire Protection Agency
CAN	Controlled Area Network	NO	Normally Open
CB	Circuit Breaker	NWF	Network Failure
CE	Conformité Européenne	OEM	Original Equipment Manufacturer
CFM	Cubic Feet per Minute	OOR	Out of Range
CGT	Cummins Generator Technologies	OORH / ORH	Out of Range High
CMM	Cubic Meters per Minute	OORL / ORL	Out of Range Low
CT	Current Transformer	PSI	Pounds per square inch

ACRONYM	DESCRIPTION	ACRONYM	DESCRIPTION
DC	Direct Current	PB	Push Button
ECM	Engine Control Module	PC	Personal Computer
ECS	Engine Control System	PCC	PowerCommand® Control
EMI	Electromagnetic interference	PGI	Power Generation Interface
EN	European Standard	PGN	Parameter Group Number
EPS	Engine Protection System	PI	Proportional/Integral
E-Stop	Emergency Stop	PID	Proportional/Integral/Derivative
FAE	Full Authority Electronic	PLC	Programmable Logic Controller
FMI	Failure Mode Identifier	PMG	Permanent Magnet Generator
FSO	Fuel Shutoff	PT	Potential Transformer
Genset	Generator Set	PTC	Power Transfer Control
GCP	Generator Control Panel	PWM	Pulse-width Modulation
GND	Ground	RFI	Radio Frequency Interference
HMI	Human-machine Interface	RH	Relative Humidity
IC	Integrated Circuit	RMS	Root Mean Square
INHG	Inches of Mercury	RTU	Remote Terminal Unit
ISO	International Organization for Standardization	SAE	Society of Automotive Engineers
kPA	kilo-Pascal	SPN	Suspect Parameter Number
LBNG	Lean-burn Natural Gas	SW_B+	Switched B+
LCD	Liquid Crystal Display	UL	Underwriters Laboratories
LCL	Low Coolant Level	UPS	Uninterruptible Power Supply
LCT	Low Coolant Temperature		

2.3 Related Literature

Before any attempt is made to operate the generator set, the operator should take time to read all of the manuals supplied with the generator set, and to familiarize themselves with the warnings and operating procedures.

CAUTION: A generator set must be operated and maintained properly if you are to expect safe and reliable operation. The Operator manual includes a maintenance schedule and a troubleshooting guide.

The relevant manuals appropriate to your generator set are also available:

- Operator Manual for GGHG/GGHH (A034G614)
- Installation Manual for GGHG/GGHH (A034G612)
- *Specification* and *Data Sheet* (For engineering data specific to the generator set)
- Application Manual T-030, *Liquid Cooled Generator Sets* (For application information)
- Parts Manual for GGHG/GGHH (0928-0242)
- Recommended Spares List (RSL) for GGHG/GGHH (RSL_458)

- Warranty Manual (F1117-0002)
- Global Commercial Warranty Statement (A028U870)
- Ford V10 Wiring Diagram (WH-0000-15)

2.3.1 Further Information - Literature

Contact your authorized distributor for more information regarding related literature for this product.

2.4 After Sales Services

We offer a full range of maintenance and warranty services.

2.4.1 Maintenance

WARNING: Incorrect service or parts replacement can result in severe personal injury, death, and/or equipment damage. Service personnel must be trained and experienced to perform electrical and/or mechanical service.

For customers who wish to have their generator sets expertly serviced at regular intervals your local distributor offers a complete maintenance contract package. This covers all items subject to routine maintenance and includes a detailed report on the condition of the generator set. In addition, this can be linked to a 24-hour call-out arrangement, providing year-round assistance if necessary. Specialist engineers are available to maintain optimum performance levels from customer's generator sets, and it is recommended that maintenance tasks are only undertaken by trained and experienced technicians provided by your authorized distributor.

2.4.2 Warranty

For details of the warranty coverage for your generator set, refer to the Global Commercial Warranty Statement (A028U870).

Extended warranty coverage is also available. In the event of a breakdown, prompt assistance can normally be given by factory trained service technicians with facilities to undertake all minor and many major repairs to equipment on site.

For further warranty details, contact your authorized distributor.

NOTE: Damage caused by failure to follow the correct coolant recommendations will not be covered by the warranty. Please contact your authorized distributor.

2.4.2.1 Warranty Limitations

For details of the warranty limitations for your generator set, refer to the Warranty Statement applicable to the generator set application.

2.4.3 How to Obtain Service

When a product requires servicing, contact your nearest Cummins Power Generation distributor. To locate your local Cummins Power Generation distributor, refer to **www.cumminspower.com** and select Distributor Locator. When contacting your distributor, always supply the complete Model, Specification, and Serial Number as shown on the nameplate.

2.4.3.1 Locating Your Distributor

In North America

Telephone +1-800-888-6626 (this is an automated service for touch-tone phones only) to contact the nearest Cummins Power Generation distributor in the United States or Canada. By selecting Option 1 (press 1), you will be automatically connected to the distributor nearest you.

If you are unable to contact a distributor using the automated service, consult the Yellow Pages. Typically, our distributors are listed under:

GENERATORS – ELECTRIC or

ENGINES – GASOLINE OR DIESEL

If you have difficulty arranging service or resolving an issue, please contact the Service Manager at the nearest Cummins Power Generation distributor for assistance.

When contacting your distributor, always supply the complete Model, Specification, and Serial Number as shown on the product nameplate.

Outside North America

If you are outside North America, telephone Cummins Power Generation at +1-763-574-5000 from 7:30 am to 4:00 pm, Central Standard Time, Monday through Friday, or fax +1-763-528-7229.

3 System Overview

This section provides an overview of the Generator Set.

3.1 Generator Set Identification

Each generator set is provided with a nameplate similar to that shown below. This provides information unique to each generator set.

3.1.1 Nameplate

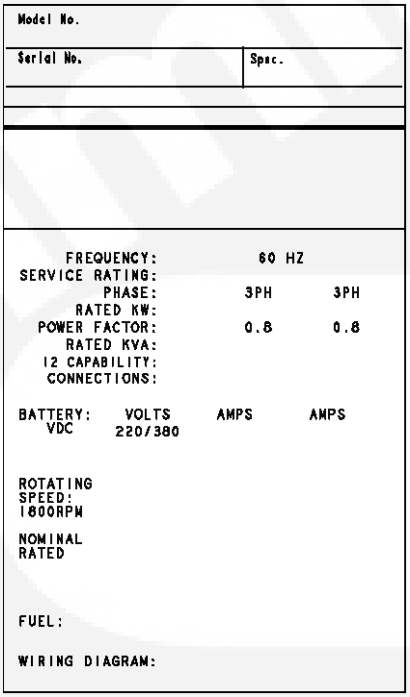

FIGURE 1. TYPICAL GENERATOR SET NAMEPLATE

3.2 Generator Set Components

The main components of a typical Ford V-10 6.8L engine generator set are shown below, and referred to within this section.

There are various options are listed although they may not be available for all models.

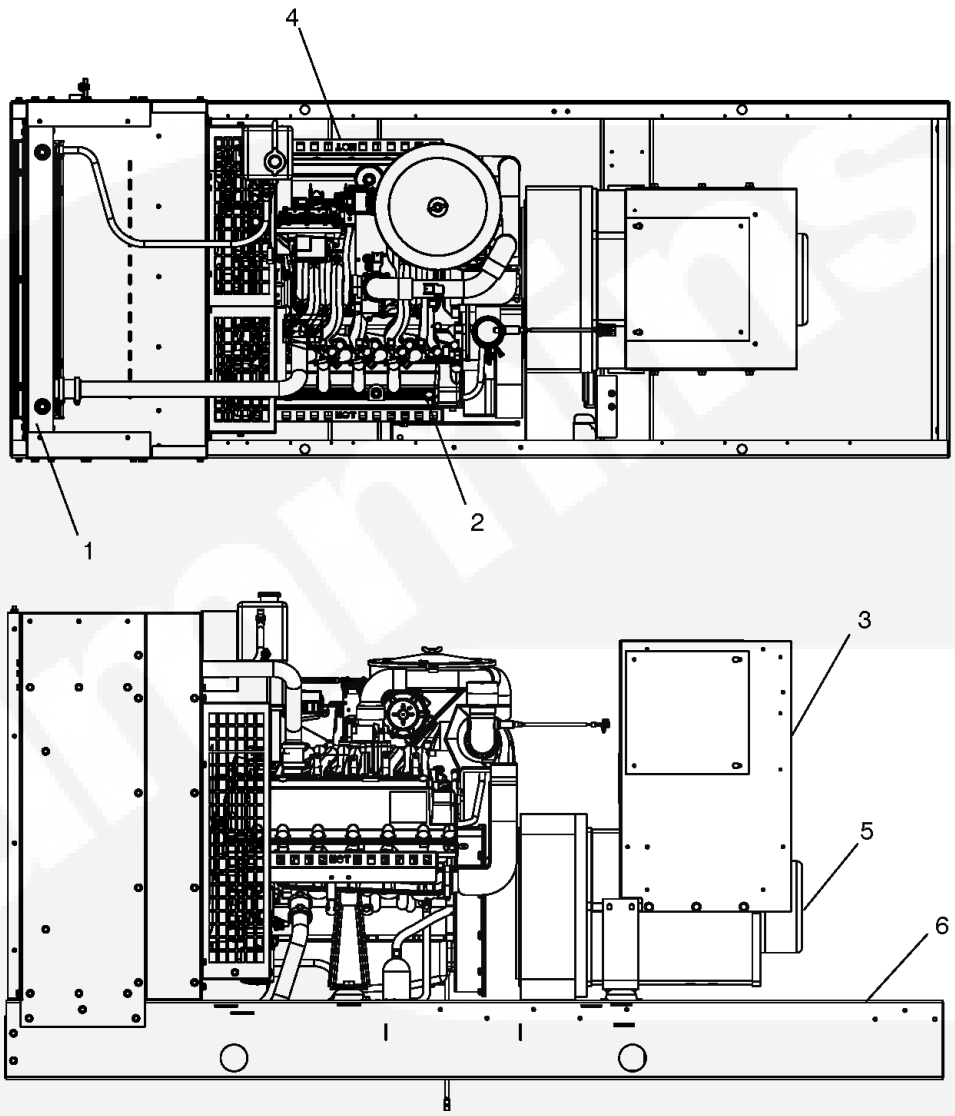

1	Radiator		(Not indicated)
2	Engine		Battery and Tray
3	Controller		Alarm Module
4	Battery		Battery Charger
5	Alternator		Engine Coolant Heater
6	Bed Frame		Alternator Heater

FIGURE 2. TYPICAL FORD V-10 6.8L ENGINE GENERATOR SET

3.3 Generator Set Rating

For details of your generator set rating, refer to the Generator Set nameplate. Refer to **Section 5.6 on page 53** for operation at temperatures or altitudes above those stated on the nameplate.

3.4 Engine

For additional engine specific information, refer to the relevant engine manual for your generator set.

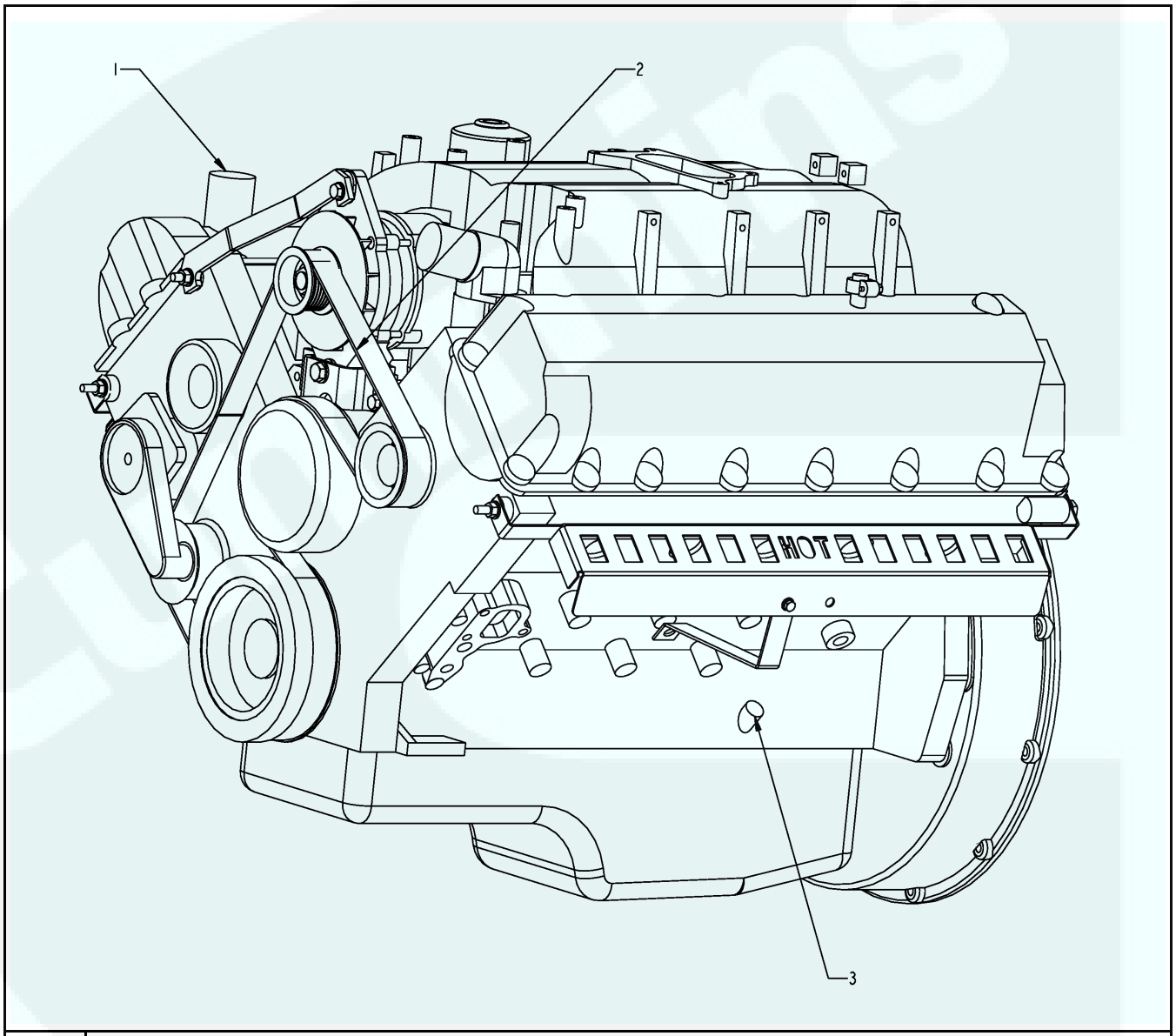

1	Oil filler cap
2	Fan belt
3	Dipstick

FIGURE 3. TYPICAL ENGINE COMPONENTS (FORD V-10 6.8L)

3.4.1 Engine Data

3.4.1.1 Engine Fuel Consumption

TABLE 1. FUEL CONSUMPTION (L/HR) AT 1500 RPM (50 HZ)

Model	GGHH	GGHH
Engine	**NG**	**LP**
Engine Performance Data at 60Hz[1]	**30.1**	**11.3**
1. Standby/Full Load Refer to Data Sheets for other applications. In line with the CPG policy of continuous improvement, these figures are subject to change.		

TABLE 2. FUEL CONSUMPTION (STANDBY/PRIME/50 HZ)

Model	**GGHH**
Standby cfh (m3/hr) LPG (Vapor or Liquid) Natural Gas	 399.4 (11.3) 1062.5 (30.1)

TABLE 3. FUEL CONSUMPTION (L/HR) AT 1800 RPM (60 HZ)

Model	GGHG	GGHG	GGHH	GGHH
Engine	**NG**	**LP**	**NG**	**LP**
Engine Performance Data at 60Hz[1]	**33.2**	**12.4**	**30.9**	**13.2**
1. Standby/Full Load Refer to Data Sheets for other applications. In line with the CPG policy of continuous improvement, these figures are subject to change.				

TABLE 4. FUEL CONSUMPTION (STANDBY/PRIME/60 HZ)

Model	**GGHG**	**GGHH**
Standby cfh (m3/hr) LPG (Vapor or Liquid) Natural Gas	 439.7 (12.4) 1173 (33.2)	 467 (13.2) 1090 (30.9)

3.5 Sensors

Various generator set parameters are measured by sensors, and the resulting signals are processed by the control board.

Engine-mounted sensors monitor a number of different systems, including:

- Lube Oil Pressure

- Cooling System Temperature

3.6 Heaters

CAUTION: Energizing heater(s) when the coolant system has been drained or if there is a suspicion that the coolant is frozen can result in equipment damage. Always make sure the radiator is filled to the recommended level before energizing the heater(s).

3.6.1 Heater Supply and Isolation

A heater supply is required for the operation of the engine and alternator heaters (if fitted).

NOTE: It is the sole responsibility of the customer to provide the power supply and the means to isolate the AC input to the terminal box. Cummins Power Generation accepts no responsibility for providing the means of isolation.

NOTE: This disconnecting device is not provided as part of the generator set.

3.7 Mains (Utility) Powered Battery Charger

This unit maintains the battery in a fully charged condition without over-charging. The unit also provides rapid charging, when necessary, at a current up to the rated output.

The charger's electronic control circuit allows the charger to be left in circuit during engine cranking and to operate in parallel with the charge alternator.

The charger will supply current to the battery system until the battery terminal voltage becomes equal to the set float voltage, at which point only a trickle charge current is present. When the battery becomes discharged due to a load being present and the terminal voltage falls, the charger will again supply current to restore the voltage of the battery to the float voltage.

CAUTION: Disconnect the battery charger before isolating the battery. Failure to do so can result in voltage spikes high enough to cause equipment damage and personal injury.

For more information on Battery Chargers see **Chapter 8 on page 89**.

3.8 Alarm Module

The Alarm Module provides audible warnings. It includes a push button switch to silence the horn. It also includes a red LED to announce an active alarm and an amber LED that indicates when the horn is silenced.

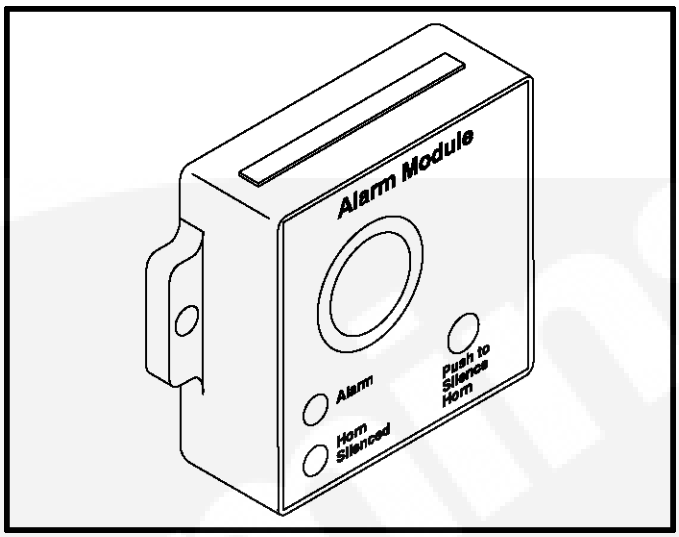

FIGURE 4. ALARM MODULE

3.9 Coolant Heater

A coolant heater keeps the engine coolant warm when the engine is shut down. It heats and circulates the coolant within the engine. This reduces start-up time and lessens engine wear caused by cold starts. It is electrically operated and thermostatically controlled.

Make sure the coolant heater is plugged into a grounded outlet. If an extension cord is used, it must be a grounded type.

3.10 System Options

3.10.1 Normal Duty Air Cleaner

The standard air cleaner assembly includes two air cleaner cannisters.

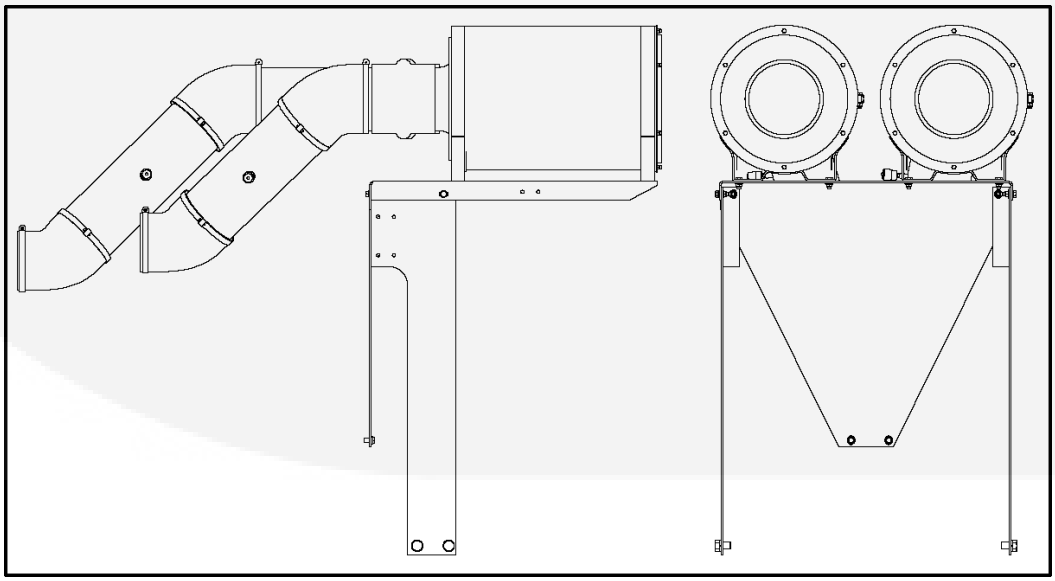

FIGURE 5. NORMAL AIR CLEANER ASSEMBLY

3.10.2 PowerCommand Universal Annunciator

A universal annunciator provides lamps and a horn to annunciate the operating status and fault conditions of an emergency power system. It is designed for connection to either a 12 VDC or a 24 VDC control system. It can be configured to be either a positive or negative signal device.

Two versions of the PowerCommand universal annunciator are available.

- Panel Mounted
- Panel with Enclosure

The universal annunciator can communicate using either a PCCNet or a Modbus network.

Refer to the annunciator owner's manual for more information.

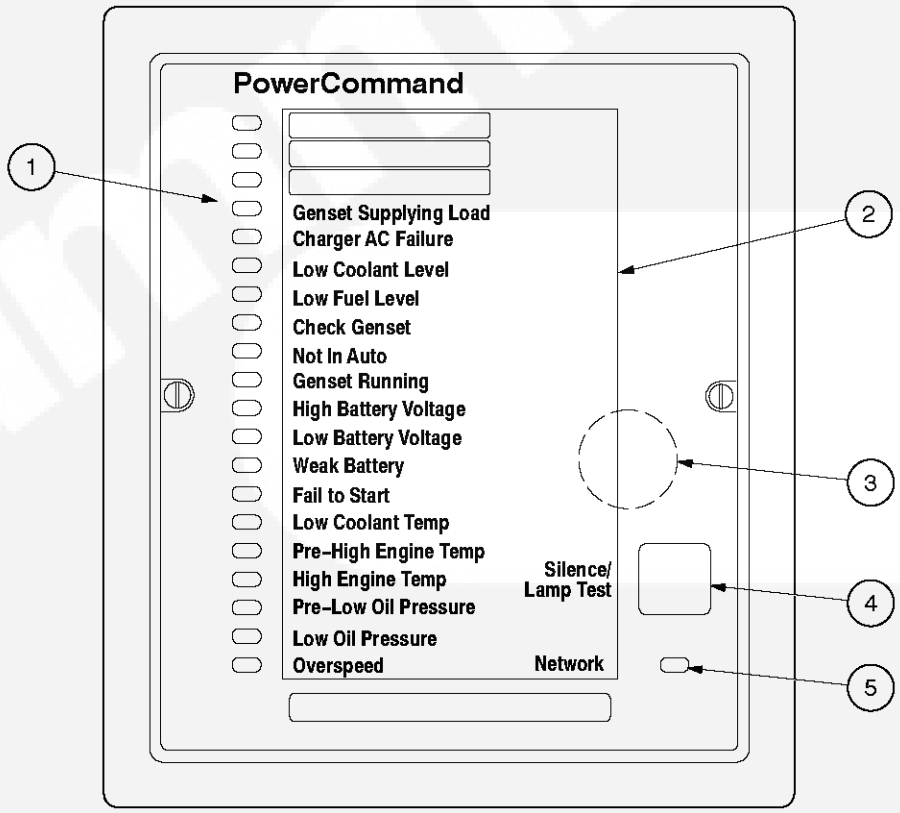

No.	Description	No	Description
1	System Status Lamps	4	Silence/Lamp Test Button
2	Insert Card	5	Network Status Lamp
3	Horn		

FIGURE 6. ANNUNCIATOR COMPONENTS

This page is intentionally blank.

4 Control System - PCC 2100

4.1 Control System Description

This manual covers the PowerCommand® Control 2100 (PCC2100) control module for single generator sets. All indicators, control switches/buttons and digital display are located on the face of the control panel as illustrated in the figure below.

The main control panel and its associated equipment are located in the Control Housing, which is mounted at the rear of the generator set. A Load Terminal Box may be mounted on either the left or right side of the housing, as required for the site.

The PCC2100 is a microprocessor-based control for generator sets. It provides fuel control and engine speed governing, main alternator voltage output regulation, and complete generator set control and monitoring. The control also monitors the health of the engine, alternator, and auxiliary systems continuously, and will affect an Automatic Shutdown if a serious fault occurs.

The PCC2100 operates in conjunction with an array of sensors and senders located on the engine, alternator and auxiliary systems. Data is passed between components over a digital data link.

An important function of the control system is to continuously monitor the generator set for faults. If a fault occurs during engine running, the control will provide an indication for the operator and, if the fault is serious, affect an automatic, fully programmed, shutdown. There are two fault level signals generated by the PCC2100. These two fault levels are:

1. **Warning:** signals an imminent or non-critical engine fault. The PCC2100 provides an indication only for this condition.
2. **Shutdown:** signals a potentially critical fault for the engine. The PCC2100 will automatically take the engine off-load and shut it down immediately, without a cooldown run.

The control systems operate on 12 or 24VDC battery power. Data backup is taken care of by a small rechargeable battery installed within the PCC2100 enclosure. Auxiliary equipment operates on low voltage AC power.

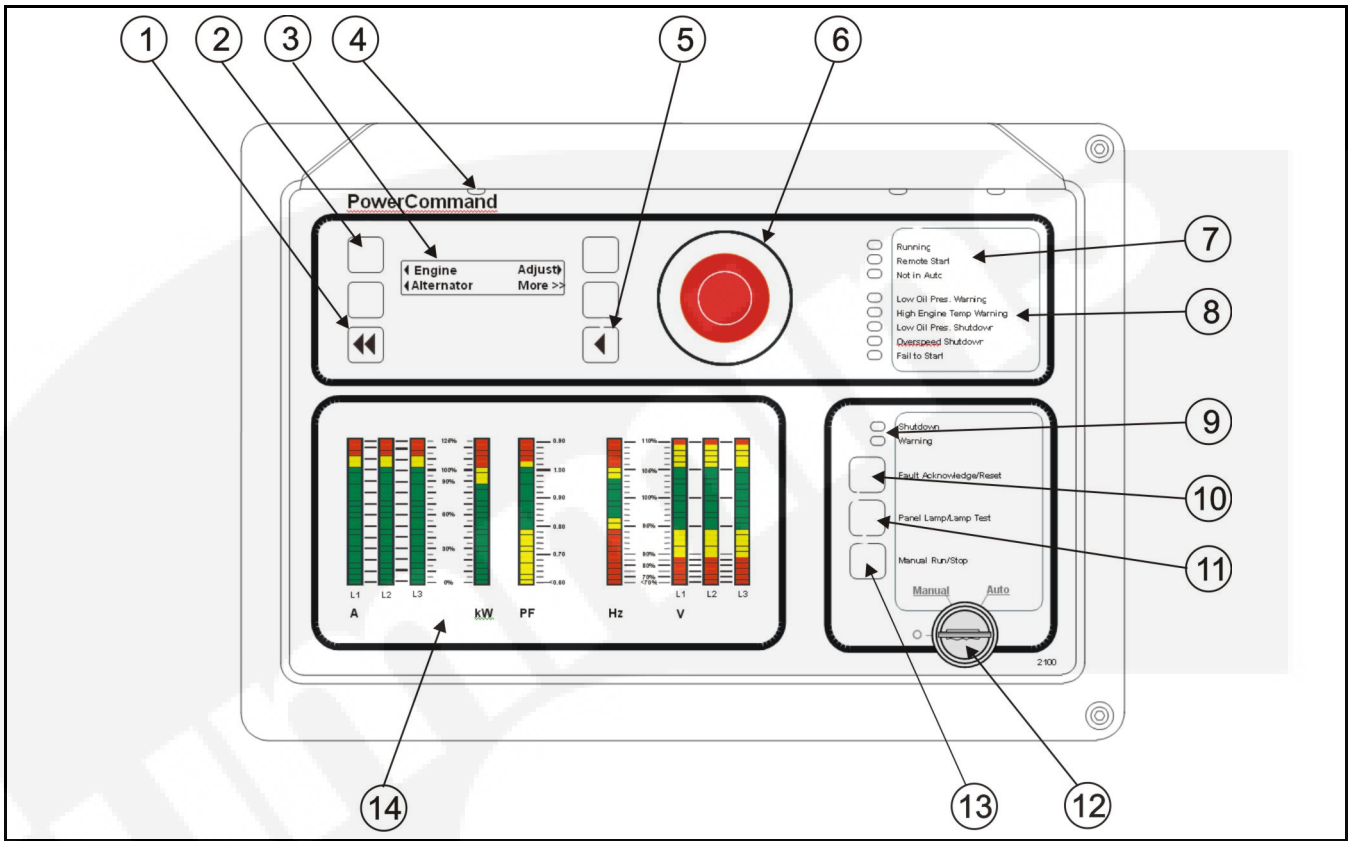

NO	DESCRIPTION	NO	DESCRIPTION
1	Home Button	8	Configurable Indicators
2	Menu Selection Button (1 of 4)	9	Shutdown & Warning Status Indicators
3	Digital Display	10	Fault Acknowledgement/Reset Button
4	Panel Lamp	11	Panel Lamp & Lamp Test Button
5	Previous Main Menu Button	12	O/Manual/Auto Key Switch (Mode Switch)
6	Emergency Stop Push Button	13	Manual Run/Stop Button
7	Running/Remote Start/Not in Auto Indicators	14	Analog AC Metering Panel (Optional)

FIGURE 7. FRONT PANEL

4.2 Control Panel Power On/Off Modes

The power on/off modes of the control panel and operating software are Power On, Screen Saver, and Sleep/Awake.

4.2.1 Power On Mode

In this mode, power is continuously supplied to the control panel. The control's operating software and control panel LEDs/graphical display will remain active until the Screen Saver mode is activated.

4.2.2 Screen Saver Mode

Power to the graphical display will be removed after 10 minutes (generator set not running or running). The 10 minute timer resets and begins after each control panel action (any button or switch selection) or signal received by the operating software. The bottom LEDs of the Analog AC Metering Panel (bar graphs) may stay On during Screen Saver mode, indicating that the operating software is active (Awake mode).

When a "Warning" signal (for example, low coolant temp) is sensed by the control will display the warning message. The control will remain active until the Fault Acknowledge button is pressed to clear the warning message and start the 10 minute timer.

4.2.3 Sleep/Awake Mode

In the Sleep mode, the control's operating software is inactive and the LEDs and the digital display on the control panel are all off. Sleep mode is a feature used to reduce battery power consumption when the control is not being used and the O/Manual/Auto switch is in the O position.

When all conditions are met (i.e., no unacknowledged faults and O/Manual/Auto switch is in the O position), the Sleep mode is activated.

The operating software is initialized and the digital display and control panel LEDs are turned on in response to moving/pressing the following control panel switch/buttons:

- Off/Manual/Auto switch
- Emergency Stop button
- Fault Acknowledge/Reset button
- Panel Lamp/Lamp Test button

To activate the control and view the menu display without starting the generator set, press the Fault Acknowledge or Panel Lamp button or move the mode switch from O to Manual.

The InPower™ service tool is required to enable or disable the Sleep mode. When shipped from the factory, Sleep mode is disabled. When disabled, the operating software will always remain active (Awake mode). If network and/or power transfer control (PTC) feature is installed, the sleep mode is not available.

☞ **NOTE: The InPower service tool is required to select the desired mode. Contact an authorized service center for assistance.**

4.3 Battle Short Mode

Battle Short mode is not a distinct mode of operation. The PowerCommand® control is still in the Off, Manual, or Auto mode while Battle Short mode is active. The PowerCommand® control still follows the appropriate sequence of operation to start and stop the generator set. Battle Short mode is a generator set mode of operation that prevents the generator set from being shutdown by all but a few, select, critical shutdown faults.

The purpose of Battle Short mode is to satisfy local code requirements, where necessary. To use this feature, the necessary software must be installed at the factory when the PowerCommand® control is purchased. Only authorized service personnel can enable this feature. When shipped from the factory, this feature is disabled.

NOTE: The Battle Short feature must be enabled or disabled using the InPower service tool.

WARNING: Use of the Battle Short mode feature can cause a fire or electrical hazard, resulting in severe personal injury or death and/or property and equipment damage. Operation of the set must be supervised during Battle Short operation.

This feature must only be used during supervised, temporary operation of the generator set. The faults that are overridden when in Battle Short mode can affect generator set performance, or cause permanent engine, alternator or connected equipment damage.

CAUTION: If this mode of operation is selected, the protection of load devices will be disabled. Cummins Power Generation will not be responsible for any claim resulting from the use of this mode.

CAUTION: All shutdown faults, including those overridden by Battle Short, must be acted upon immediately to ensure the safety and well being of the operator and the generator set.

Battle Short is turned on or off with an external switch connected to one of the two customer configured inputs or a soft switch on the operator panel.

When enabled, Battle Short switch input can be set using a Setup menu. To turn Battle Short mode on using the soft switch in the operator panel, Battle Short must be set to Operator Panel and enabled using the InPower service tool (default is Inactive).

When Battle Short mode is enabled, the Warning status indicator lights and code 1131 – Battle Short Active – is displayed.

When Battle Short mode is enabled and an overridden shutdown fault occurs, the shutdown lamp remains lit even though the set continues to run. Fault code 1416 – Fail to Shutdown – is displayed. If the fault is acknowledge, the fault message is cleared from the display but remains in the Fault History file as long as Battle Short mode is enabled.

Battle Short is suspended and a shutdown occurs immediately if any of the following critical shutdown faults occur:

- Speed Signal Lost (Loss of Speed Sense) - Fault code 121
- Overspeed - Fault code 234
- Local Emergency Stop - Fault code 1433
- Remote Emergency Stop - Fault code 1434
- Excitation Fault (Loss of Voltage Sense) - Fault code 2335

Or

The Battle Short feature is disabled after an overridden shutdown fault occurred while in Battle Short mode. Fault code 1123 – Shutdown After Battle Short – is then displayed.

4.4 Front Panel

The front panel contains the following components:

4.4.1 Digital Display

This two-line, 20-characters per line alphanumeric display is used to view menus of the menu-driven operating system. Refer to the menu trees later in this section. The display is also used to show warning and shutdown messages.

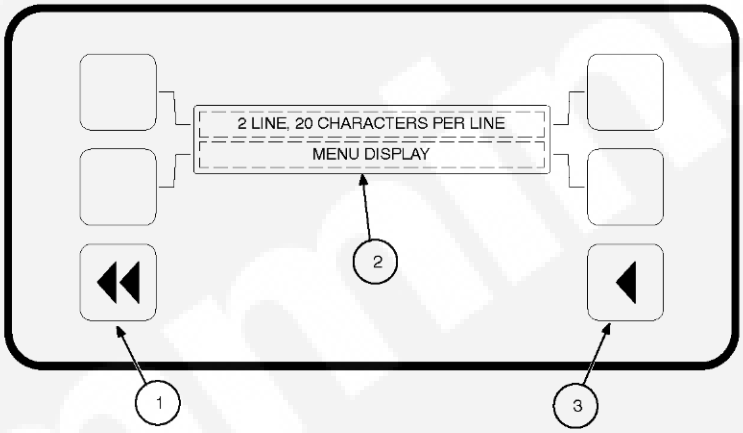

NO	Description
1	Home Button
2	Digital Display
3	Previous Main Menu Button

FIGURE 8. DIGITAL DISPLAY AND MENU SELECTION BUTTON

4.4.2 Display Menu Selection Button

Four momentary buttons-two on each side of the digital display window-are used to step through the various menu options and to adjust generator set parameters. A green triangle (◄ or ►), arrow (↑, ↓, ←, or →), >>, or plus/minus sign (+ or –) in the digital display adjacent to the button is shown when the button can be used (button is "active").

- In the digital display for main menus, the ◄ or ► symbols indicate that pressing the adjacent button causes the operating program to go to the selected submenu (e.g., Engine Menu).
- In the digital display, the More>> symbol indicates that pressing the adjacent button causes the operating program to go to the next main menu.
- In the digital display, the ↑ or ↓ symbols indicate that pressing the adjacent button causes the operating program to go to the next or previous submenu, as shown in the menu diagrams. Only the ↓ symbol is displayed in the first submenu. Only the ↑ is displayed in the last submenu. Both symbols are displayed in the rest of the submenus.
- In the digital display, the plus or minus symbols (+ or –) indicate that pressing the adjacent button can be used to change a parameter or value shown on the display.

  When there is a choice of two parameters, one parameter is associated with the + symbol and the other is associated with the – symbol.

  When changing values, pressing the button adjacent to the + symbol increases the value and pressing the button adjacent to the – symbol decreases the value. Only one numeric character of a field can be changed at a time.

- In the digital display, the ← or → symbol indicates that pressing the adjacent button causes the operating program to move the cursor to the next numeric character. The selected numeric character can then be changed by pressing the buttons adjacent to the + and – symbols. Only the → symbol is displayed when the cursor is on the first character of a field that can be changed. Only the ← is displayed when the cursor is on the last character. Both symbols are displayed when the cursor is on any other character.
- After adjusting values/parameters, pressing the ► symbol results in the changes being saved. **If the Home button or Previous Main Menu button is pressed before pressing the ► symbol, the changes are not saved.**

4.4.3 Home Button

Press this button (◄◄) to view the Home Menu. Refer to the menu trees that appear later in the manual.

4.4.4 Previous Main Menu Button

Press this button (◄) to view the previous Main Menu. All main menus include both types of green triangles (◄ and ►). Refer to the menu trees later in this manual.

NOTE: The up and down arrows (↑ and ↓) are used to navigate between the submenus.

4.4.5 Emergency Stop Button

Push this button in for emergency shutdown of the generator set. This will stop the generator set immediately and prevent starting of the set from any location (local and remote).

CAUTION: To avoid equipment damage, the Emergency Stop button must not be used for a normal shutdown, as this will prevent a cooling run in which the lubricating oil and engine coolant carry heat away from the engine combustion chamber and bearings in a safe manner.

If the generator set is not running, pushing the button in will prevent the starting of the engine, regardless of the Start signal source.

CAUTION: Ensure the remote start control is not active when the Emergency Stop is reset. The generator set may start after the Emergency Stop is reset upon receiving a remote start signal.

To reset:

1. Pull the button and allow it to pop out.
2. Turn the O/Manual/Auto switch to O.
3. Press the front panel Fault Acknowledge/Reset button.
4. Select Manual or Auto, as required.

NOTE: Emergency Stop shutdown can be reset only at the operator panel.

CAUTION: Ensure that the cause of the emergency stop is fully investigated and remedied before a fault Reset and generator Start are attempted.

NOTE: **On enclosed sets, an external Emergency Stop button is situated in close proximity to the control panel viewing window. For open generator sets, it is recommended that an additional Emergency Stop button be situated in close proximity to the plant room exit.**

4.4.6 Running Indicator

This green lamp is lit whenever the generator (local or remote) is running.

4.4.7 Remote Start Indicator

This green lamp indicates the control is receiving a remote run signal. When flashing, it indicates a load demand stop mode.

4.4.8 Not in Auto

This red lamp flashes continuously when the O/Manual/Auto switch is not in the Auto position.

NOTE: **If the switch is in the Auto position and the lamp is still flashing, service is required.**

4.4.9 Analog AC Metering Panel

This panel simultaneously displays 3-phase line to line AC volts and current, kW, power factor and frequency.

The meter panel is composed of a series of LEDs, that are configured in bar graphs for each function. The LEDs are color coded, with green indicating normal range values, amber for warning levels, and red for shutdown conditions.

Scales for each function are in % of nominal values. Resolution is 1% for values close to nominal, and increases at values further from nominal.

4.4.10 Shutdown Status

This red lamp is lit when the control detects a Shutdown condition. The generator set cannot be started when this lamp is on. After the condition has been corrected, the lamp can be reset by turning the O/Manual/Auto switch to the O position, and pressing the Fault Acknowledge button. The generator set cannot be started when this lamp is on.

Dependent upon the specific fault that occurs, the engine may or may not shut down immediately. A fault that could cause engine damage, causes an immediate engine shutdown (bypasses engine cooldown sequence). All other faults would allow the engine to run during the cooldown sequence before engine shutdown. In this case, the Shutdown Status indicator blinks during the cooldown period.

4.4.11 Warning Status Indicator

This yellow lamp is lit whenever the control detects a warning condition. After the condition is corrected, warning indicators can be reset by pressing the Fault Acknowledge button. (It is **not** necessary to stop the generator set if the fault becomes inactive during generator set operation.) In auto mode, warning indicators can also be reset by cycling the remote reset input after the condition is corrected.

Some warnings remain active after the condition is corrected and the control reset button is pressed. This will require the generator set to be shut down to reset the warning indicator.

4.4.12 Fault Acknowledgement/Reset Button

Press this button to acknowledge warning and shutdown messages after the fault has been corrected. Pressing this button clears the fault from the current fault list.

To acknowledge a Warning message, the O/Manual/Auto switch can be in any position. (It is not necessary to stop the generator set to acknowledge an inactive Warning condition.) To acknowledge a shutdown message with this button, the O/Manual/Auto switch must be in the O position.

4.4.13 Panel Lamp and Lamp (LED) Test Button

Press this button to turn the control panel lamps on or off. The lights will shut off after about ten minutes. Press and hold this button to test all front panel LEDs and meters. The meters will light one bar at a time.

4.4.14 Manual Run/Stop Button

This button starts and stops the generator set locally and will bypass the Time Delay to Start and Stop sequences. The O/Manual/Auto switch must be in the Manual position to enable this button.

4.4.15 O/Manual/Auto Switch

Manual position enables the use of the switch panel Manual Run/Stop button.

Auto position enables start/stop control of the engine from a remote location. (Disable the use of the switch panel Manual Run/Stop button.)

O (off) position prevents the starting of the set (local or remote).

CAUTION: If moved to the O position during set operation, this will cause an immediate engine shutdown (bypasses cooldown timers). Hot shutdowns should be avoided to prolong the reliability of the generator set. Hot shutdowns are logged by the system software.

NOTE: When the generator set is operating in the Remote Start Mode, removing the Remote Start Command does not shut off the engine if the load is more than 10 percent, the cooldown timer is set to zero, and the control is configured for a single unit (not in parallel). The generator set continues to operate until it runs out of fuel, the E-stop button is used, or the load is removed.

4.4.16 Configurable Indicators

The following configurable indicators (default values shown) can be changed with the InPower service tool. The configurable items are: change generator event and LED color (green, yellow or red), and enable/disable indicator.

The InPower service tool is required to select the desired settings. Contact an authorized service center for assistance.

4.4.16.1 Low Oil Pressure Warning Indicator

This yellow lamp indicates the oil pressure is lower than the normal range of operation.

4.4.16.2 High Engine Temperature Warning Indicator

This yellow lamp indicates the engine temperature is higher than the normal range of operation.

4.4.16.3 Low Oil Pressure Shutdown Indicator

This red lamp indicates the engine has shut down because of low oil pressure.

4.4.16.4 Overspeed Shutdown Indicator

This red lamp indicates the engine has shut down because of excessive speed.

4.4.16.5 Fail to Start Indicator

This red lamp indicates the engine failed to start.

4.5 Control Menus

4.5.1 Main Menus

The figure below shows the three major main menus available to the user. When viewing a submenu, you can press the previous main menu button at any time to view its main menu.

As shown in the illustration, each main menu can branch into one of four directions. Press the button next to "More>>" in the display to view the next Main menu. Main Menu 1 is redisplayed when you press the button next to "More>>" in the Main Menu 3 display.

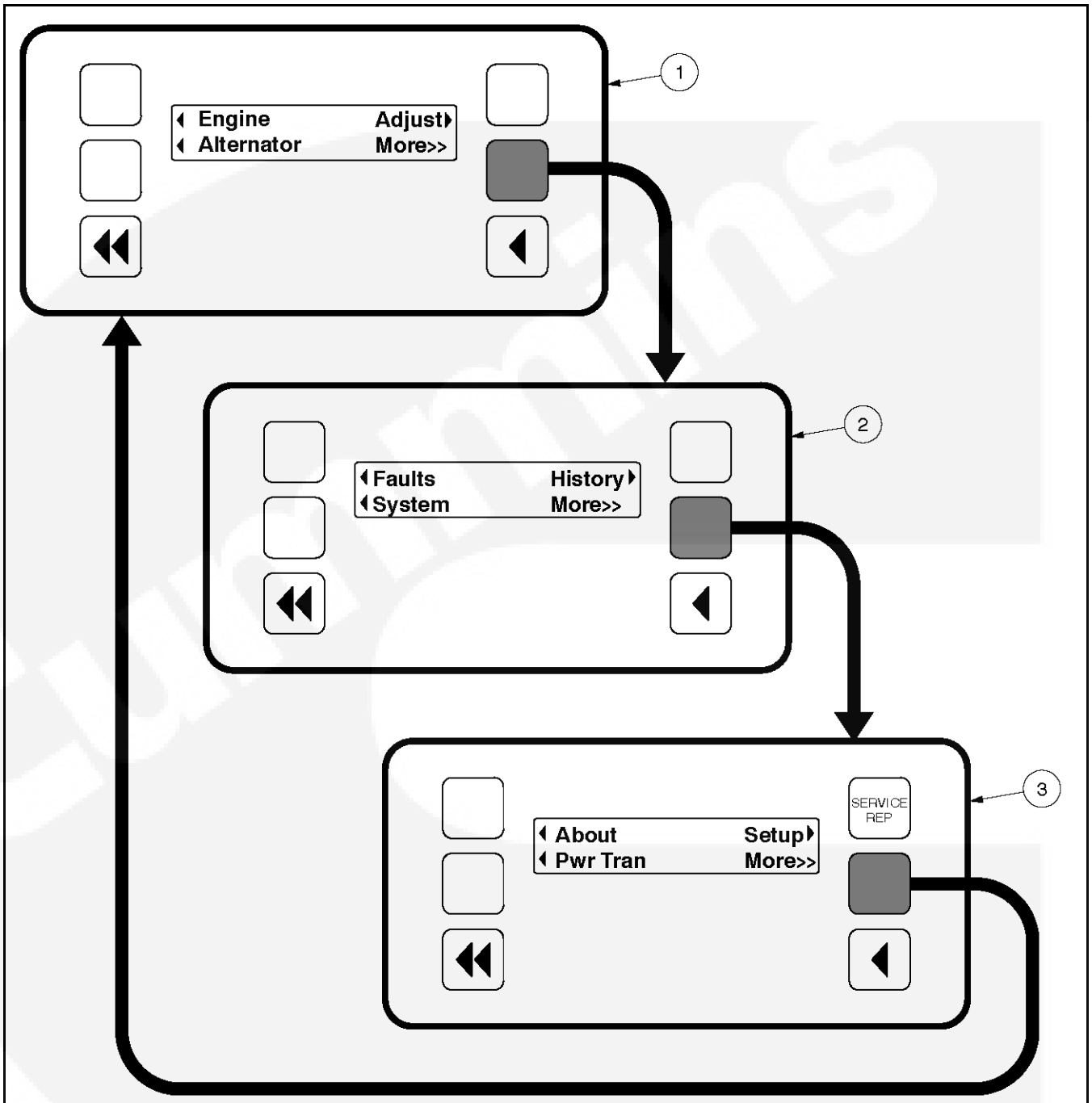

NO	DESCRIPTION	NO	DESCRIPTION
1	Main Menu 1	3	Main Menu 3
2	Main Menu 2		

FIGURE 9. MAIN MENUS

4.5.1.1 Main Menu 1

Main Menu 1 is also the Home menu. When viewing any of the other main menus or any submenu, you can press the home button to view this menu.

To display engine parameters, such as coolant temperature, oil pressure, oil temperature, etc., press the button next to the word "Engine" in the display. Refer to the Engine menu diagram.

To display alternator parameters, such as line-to-line voltage, line-to-neutral voltage, amperage, frequency, etc., press the button next to the word "Alternator" in the display. Turn to the Alternator menu diagram.

To adjust generator parameters, such as idle start, voltage, frequency, start delay, and stop delay, press the button next to the word "Adjust" in the display. Turn to the Adjust menu diagram.

To view one of the other main menus, press the button next to "More>>" in the display.

4.5.1.2 Main Menu 2

To display system faults, press the button next to the word "Faults" in the display. Up to 20 of the most recent/current faults can be displayed. Refer to the Faults menu diagram.

To view network system parameters, such as on the automatic transfer switch (ATS), Master, or Genset system, press the button next to the word "System" in the display. Refer to the System menu diagram.

To display historical engine parameters such as number of starts, engine hours, control hours, kilowatt hours, and genset duty cycle, press the button next to the word "History" in the display. Refer to the History menu diagram.

To view one of the other main menus, press the button next to "More>>" in the display.

4.5.1.3 Main Menu 3

To view parameters on the generator, such as model, standby rating, and software version, press the button next to the word "About" in the display. Refer to the About menu diagram.

To view power transfer parameters, such as source power, frequency, generator, utility, and active transfer timer, press the button next to the word "Pwr Tran" in the display. Refer to the Power Transfer Menu

Main Menu 3 also includes a link to the Setup menus. These menus can be viewed but changes to these menus are restricted to service personnel with the appropriate access code.

To view one of the other main menus, press the button next to "More>>" in the display.

4.5.2 Adjusting Default Settings

The Controller Configuration Menu can be used to adjust the following default settings:

- Language - Select from available loaded languages
- Temperature Units - Fahrenheit or Centigrade
- Fluid Pressure Units - kPA or PSI

For more information on adjusting these settings, turn to the Controller Configuration menu diagram.

4.5.3 System Messages

A system message pop-up screen is displayed when the event it is displaying becomes active. These pop-up screens remain displayed until pre-empted by another pop-up screen or until any display button is pressed. Once a button is pressed, the previous menu is redisplayed. To return to an active pop-up screen from the previous menu, select the following menu:

- *Engine* to redisplay Time Delay Idle
- *Faults* to redisplay Faults

Pop-up screens are displayed for the following:

- Faults
- Power Transfer Control timer
- Time Delay - Start, Stop, and Idle

An example of a Time Delay Idle pop-up screen is shown below. A countdown, in seconds, is included in the display.

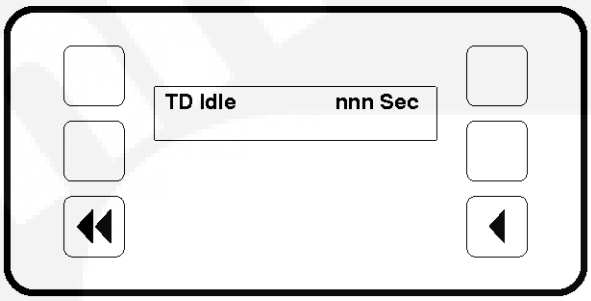

FIGURE 10. TIME DELAY IDLE POP-UP SCREEN

4.5.4 Controller Configuration Menu

Figure 11 on page 31 shows a block representation of the Controller Configuration menus. These menus are used to change the default language, temperature units, and pressure units to be displayed in menus.

To view the first Controller Configuration menu, make sure Main Menu 1 is displayed and simultaneously press the Home Menu and Previous Main Menu buttons.

As shown in the diagram, the Controller Configuration menu has three submenus.

- **Language Selected submenu:** Used to select desired language (default = English).
- **Temperature Units submenu:** Used to select Fahrenheit or Centigrade for temperature readings.
- **Fluid Pressure Units submenu:** Used to select PSI or kPA for pressure readings.

Press the buttons next to the up and down arrows in the digital display to navigate between the menus.

Press the button next to the ► symbol in the display until the + and - symbols are displayed.

Press the button next to the + or – symbol to select the desired option.

After selecting option, pressing the ► symbol results in the changes being saved. If the Home button or Previous Main Menu button is pressed before pressing the ► symbol, the changes are not saved.

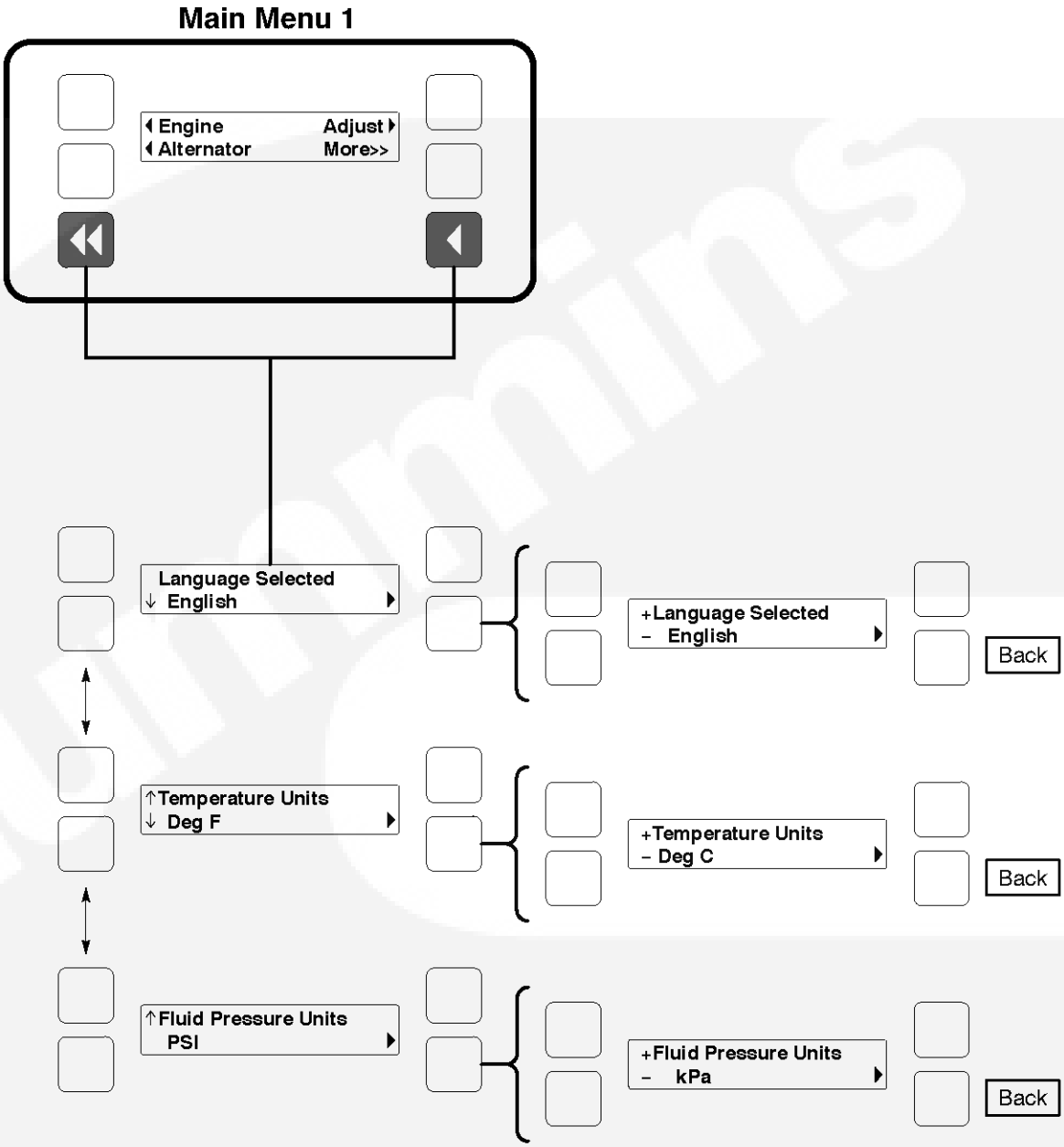

FIGURE 11. CONTROLLER CONFIGURATION MENU

4.5.5 Engine Menu

Figure 12 on page 33 shows a block representation of the Engine menu. If you press the button next to the word "Engine" in the display, the first Engine submenu is displayed.

As shown in the diagram, the Engine menu has seven submenus. The data in the submenus will vary according to the type and number of sensors provided with the engine.

- **Coolant Temperature submenu:** This submenu displays the engine coolant temperature which can be viewed in degrees Fahrenheit or Centigrade (see the **Section 4.5.4**).
- **Oil Pressure submenu:** This submenu displays the engine oil pressure which can be viewed in PSI or kPA (see **Section 4.5.4 on page 30**).
- **Oil Temperature submenu (Only available on some models):** This submenu displays the engine oil temperature which can be viewed in degrees Fahrenheit or Centigrade (see **Section 4.5.4 on page 30**).
- **Engine Speed submenu:** This submenu displays the engine RPM.
- **Battery Voltage submenu:** This submenu displays the engine battery voltage.
- **Governor Duty Cycle submenu:** This submenu displays the governor duty cycle (drive) levels in percentage of maximum.
- **Active Time Delay submenu:** This submenu displays the time delay that is currently active: warm-up, cooldown, start, or stop delays.

Press the buttons next to the ↓ and ↑ symbols in the digital display to navigate between the menus. Press the Home button or the Previous Main Menu button to return to Main Menu 1.

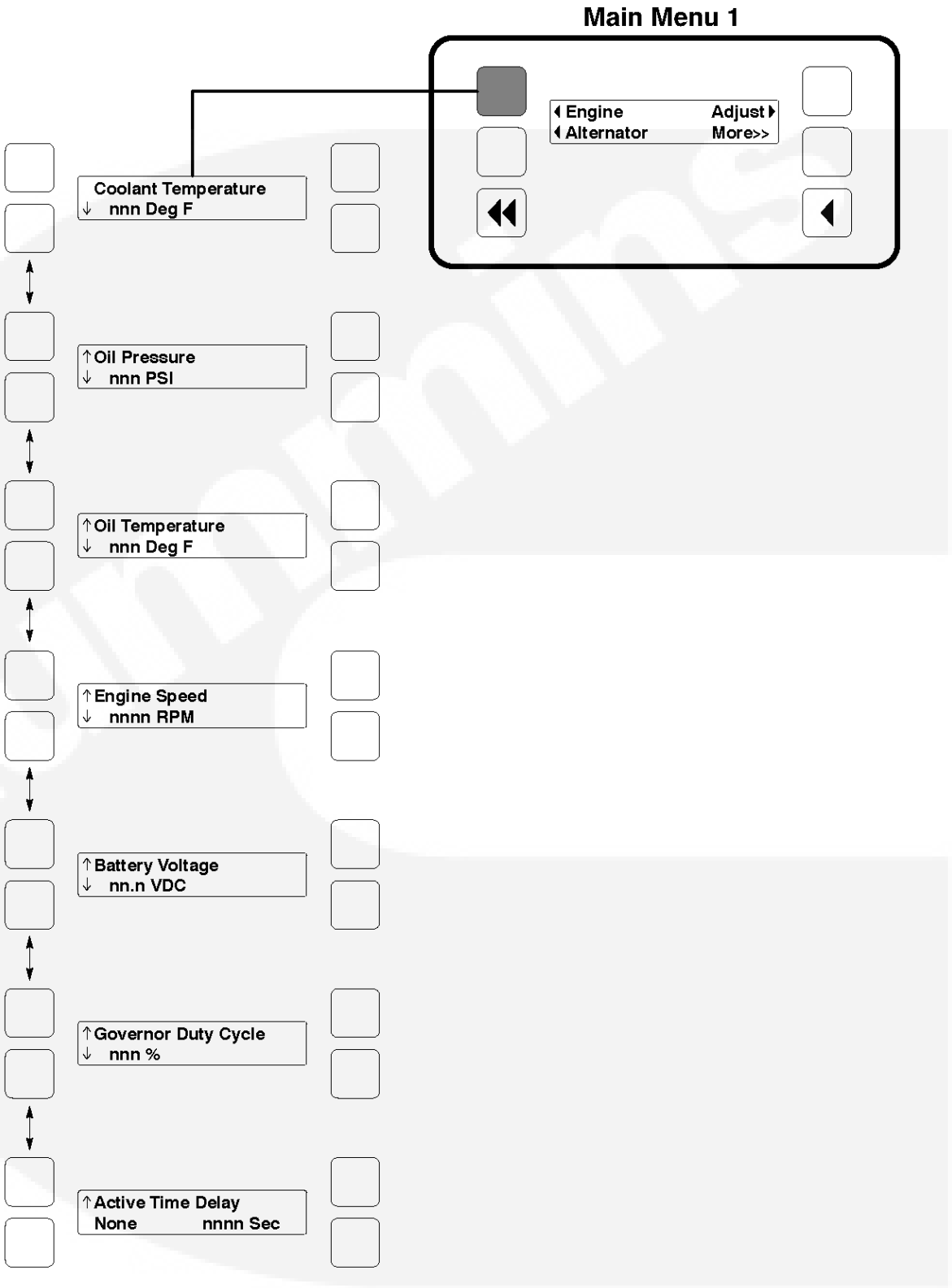

FIGURE 12. ENGINE MENU

4.5.6 Alternator Menu

Figure 13 on page 35 shows a block representation of the Alternator menu. If you press the button next to the word "Alternator" in the display, the first Alternator submenu is displayed.

As shown in the diagram, the Alternator menu has eleven submenus.

- **Line-to-Line Voltage submenu:** The voltages Line-to-Line (L1, L2 and L3) are measured between L1 to L2, L2 to L3 and L3 to L1, respectively. (Single phase - L1 to L2 only.)
- **Line-to-Neutral Voltage submenu:** Note that the Line-to -Neutral menu will not be displayed for a 3 phase/3 wire system. Single phase - L1 to N and L2 to N.
- **Amps submenu:** All phases. (Single phase - L1 and L2 only.)
- **Frequency submenu:** Generator set output frequency.
- **Total Real Power submenu:** This submenu displays the total amount of real power output, in kilowatts (kW).
- **Real Power submenu:** This submenu displays the amount of real power output for L1, L2, and L3, in kilowatts (kW). (Single phase - L1 and L2 only.)
- **Total Apparent Power submenu:** This submenu displays the total amount of apparent power output, in kilovolt amps (kVA).
- **Apparent Power submenu:** This submenu displays the amount of apparent power output for L1, L2, and L3, in kilovolt amps (kVA). (Single phase - L1 and L2 only.)
- **Total Power Factor submenu:** This submenu displays the power factor with leading/lagging indication.

  The PF reading will contain an asterisk if the power factor is leading (for example, Total PF 0.9).*
- **Power Factor submenu:** This submenu displays a power factor value for L1, L2, and L3. (Single phase - L1 and L2 only.)

  The PF reading will contain an asterisk if the power factor is leading (for example, PF L1 0.9).*
- **AVR Duty Cycle submenu:** This submenu displays the voltage regulator (drive) level in percentage of maximum. (Where maximum is 100% Duty Cycle, software clamps Duty Cycle maximum to 60% for PMG and 90% for shunt.)

Press the buttons next to the ↑ and ↓ arrows in the digital display to navigate between the menus. Press the Home button or the Previous Main Menu button to return to Main Menu 1.

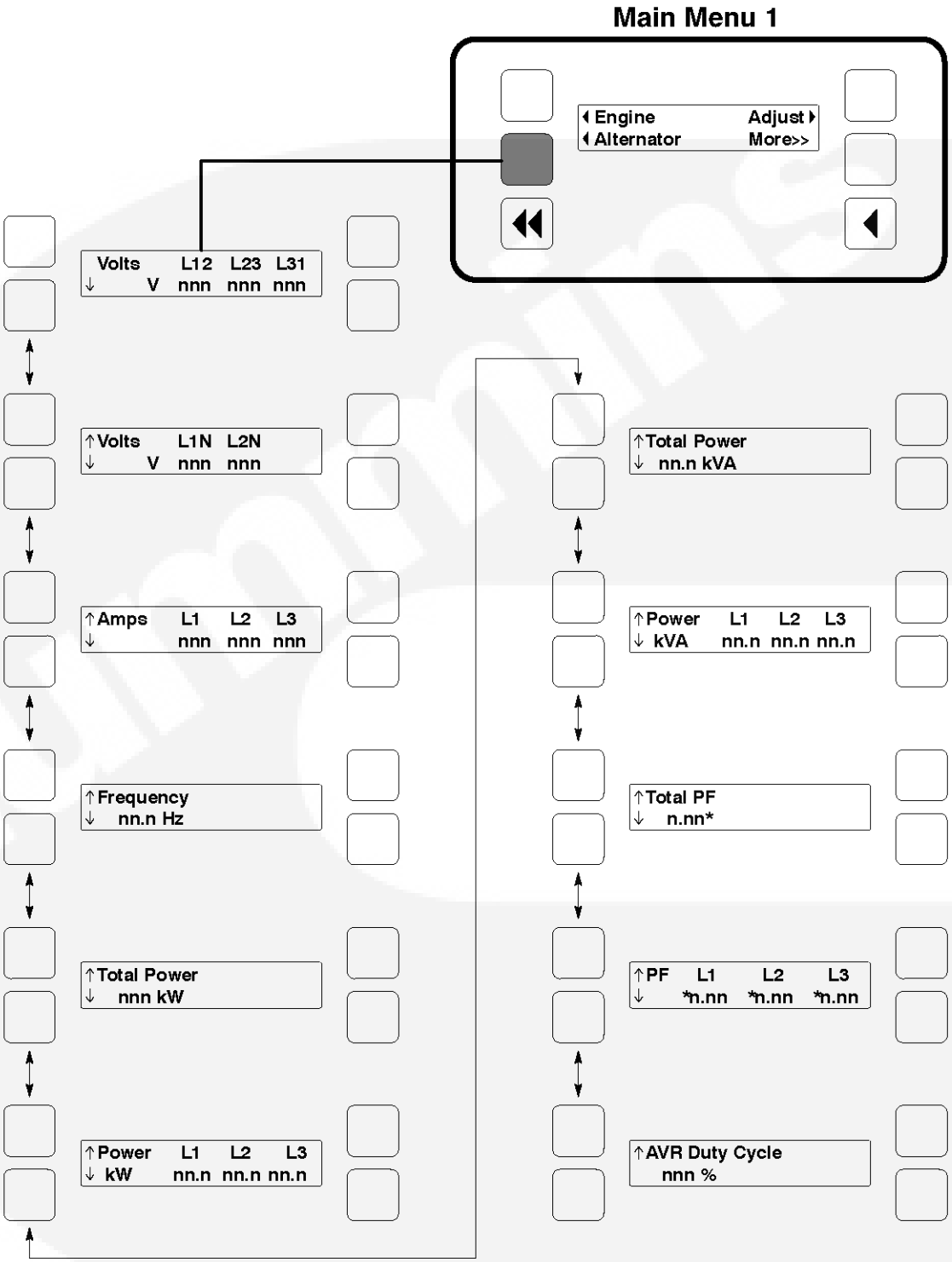

FIGURE 13. ALTERNATOR MENU

4.5.7 Adjust Menu

Figure 14 on page 37 shows a block representation of the Adjust menu. If you press the button next to the word "Adjust" in the display, the first Adjust submenu is displayed.

As shown in the diagram, the Adjust menu has six submenus. Each submenu includes a parameter or value that can be changed.

- **Voltage Adjust submenu:** Voltage can be adjusted to 5 percent of the nominal voltage. For example, if generator set output voltage is 208 volts, the voltage can be adjusted from 198 to 218 volts.

  If the displayed value is greater or less than the allowed (5%) range, the control will not except the entry and will return to the previous setting. Retry by entering a smaller change in one volt increments.

- **Frequency Adjust submenu:** Frequency can be adjusted to 5 percent of the nominal frequency. For example, if the generator set frequency is 60.0 Hz, the frequency can be adjusted from 57.0 to 63.0 Hz.
- **Start Delay submenu:** Start Delay can be set from 0 to 300 seconds (default = 0). (Enter 1 or more to enable.) This function is bypassed during a manual start/stop sequence.
- **Stop Delay submenu:** Stop Delay can be set from 0 to 600 seconds (default = 0). (Enter 1 or more to enable.) This function is bypassed during a manual start/stop sequence and engine shutdown faults.
- **Rated To Idle (Beginning Version 2.303):** Rated To Idle delay can be set from 0 to 10 seconds (default = 0). (Enter 1 or more to enable.) Entering a non-zero delay will cause the generator set to delay the transition to Cooldown At Idle.
- **Idle Start submenu (Only available on some models):** Idle Start can be enabled or disabled (default = Disable). This function is only enabled when the generator set is started in manual mode. Idle Start can also be enabled while the generator set is running in manual mode. (Auto/remote start is not affected by this setting.)

Press the buttons next to the ↑ and ↓ arrows in the digital display to navigate between the menus. Press the Home button or the Previous Main Menu button to return to Main Menu 1.

Adjusting Values/Parameters:

1. Press the button next to the ► symbol in the display until the + and - symbols are displayed.
2. If necessary, press the button next to the symbols to move to the numeric character you wish to change.
3. Press the button next to the + symbol to increase the value or select parameter; press the button next to the – symbol to decrease the value or select parameter.
4. After adjusting values/selecting parameters, pressing the ► symbol results in the changes being saved. (When adjusting values, make sure the cursor is on the last numeric character before pressing the ► symbol).

   If the Home button or Previous Main Menu button is pressed before pressing the ►

   symbol, the changes are not saved.

Enabling Idle Start will cause the genset to run in idle mode until Idle Start is disabled. A warning is displayed if genset is left in idle more than 10 minutes. Long periods of engine idling can eventually affect engine performance and may void engine warranty.

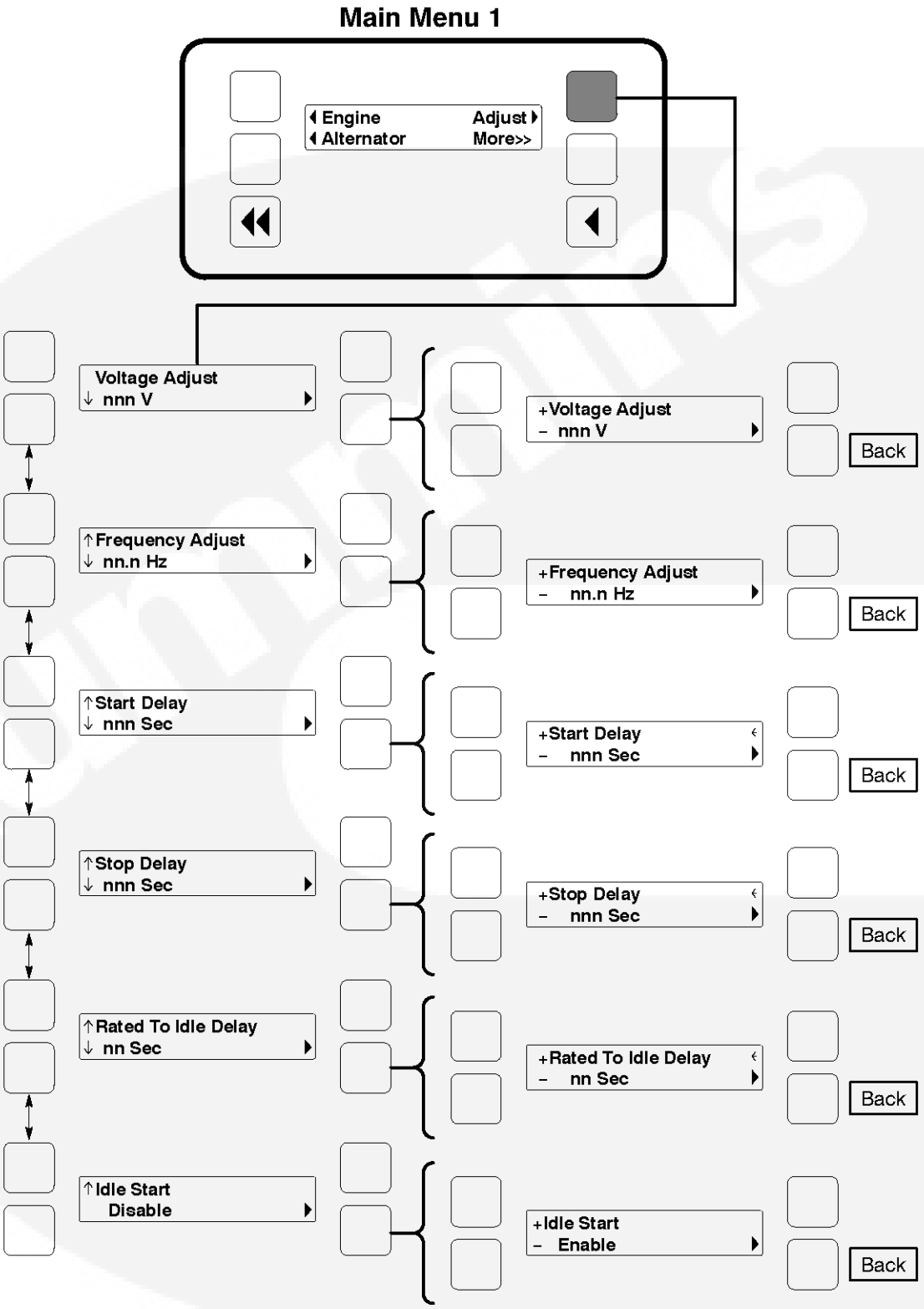

FIGURE 14. ADJUST MENU

4.5.8 Faults Menu

Figure 15 shows a block representation of the Faults menu. Up to 20 of the most recent faults can be viewed. An example of how a fault code is displayed is shown in Figure 16 on page 39.

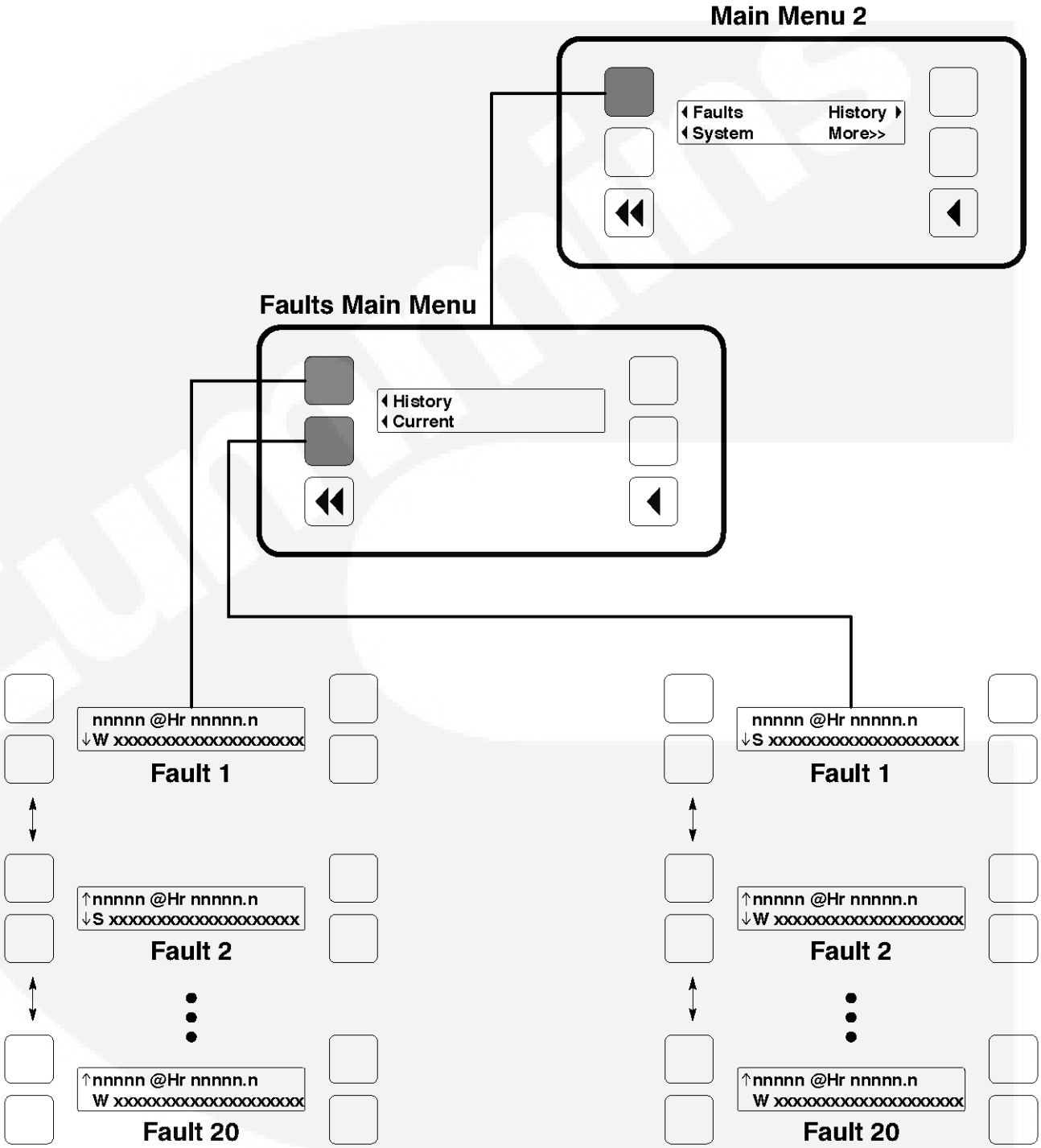

FIGURE 15. FAULTS MENU

The available menus are dependent on the number of faults that have occurred.

- **History submenu:** From the Faults Main Menu, press the button next to the word "History" in the display to view up to twenty of the most recent acknowledged faults. Press the buttons next to the ↑ and ↓ symbols in the digital display to navigate between the menus. Press the Previous Main Menu button to return to the Faults Main Menu.
- **Current Fault submenu:** From the Faults Main Menu, press the button next to the word "Current" in the display to view up to twenty of the most recent unacknowledged faults. Press the Previous Main Menu button to return to the Faults Main Menu.

If there are no faults, the ◄ symbol next to the word "Faults" is not displayed and no Fault menus are available.

If more than one fault has occurred, press the button next to the word "Fault" in the screen display to view the Faults Main Menu. As shown in the diagram, the Faults Main Menu has two submenus. Press the Previous Main Menu button to return to the Faults Main Menu. Press the Previous Main Menu button a second time to return to Main Menu 2.

Press the Home button at any time to return to Main Menu 1.

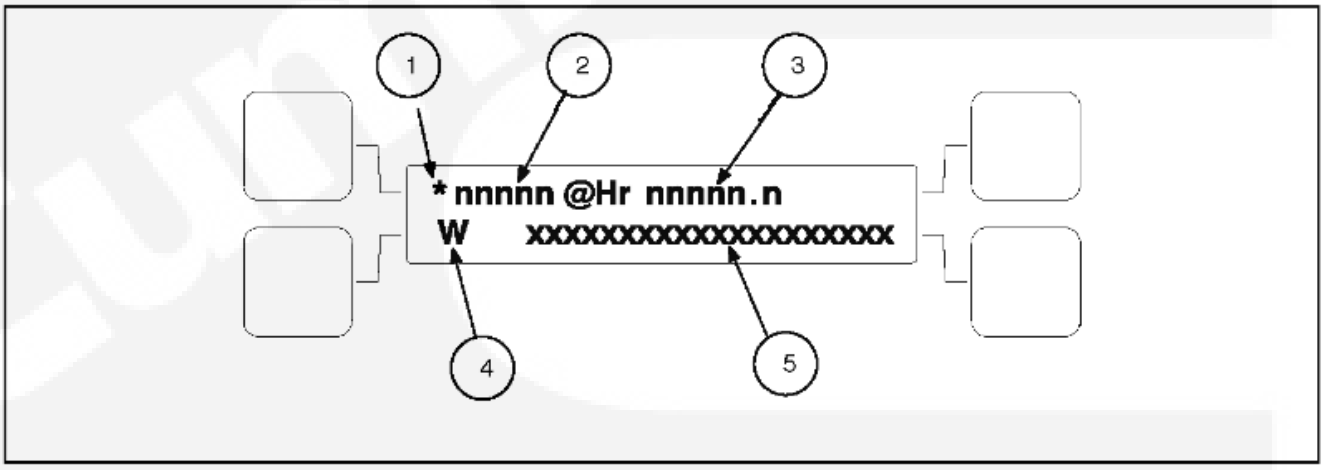

NO	DESCRIPTION	NO	DESCRIPTION
1	Asterisk = Active Fault	4	W=Warning S=Shutdown
2	Fault Code	5	Fault Description
3	Hour Fault Occurred		

FIGURE 16. HISTORY/CURRENT FAULT SUBMENU

4.5.9 System Menu

Figure 17 on page 40 shows a block representation of the System menu. If you press the button next to the word "System" in the display, the System Main Menu is displayed. This menu is displayed only if the network communications module (NCM) feature is installed. The System Main Menu allows you to view the status and load of other PCC equipment connected on a common network with the PCC 2100 control.

As shown in the diagram, the System Main Menu has one set of submenus.

- **Genset System submenus:** From the System Main Menu, press the button next to the word "Genset" in the display to view the first of up to 16 Genset System submenus. One generator set must be available in the network to display this submenu.

  The genset submenu allows viewing of the generator set name (configured with InPower), kW load and operational state.

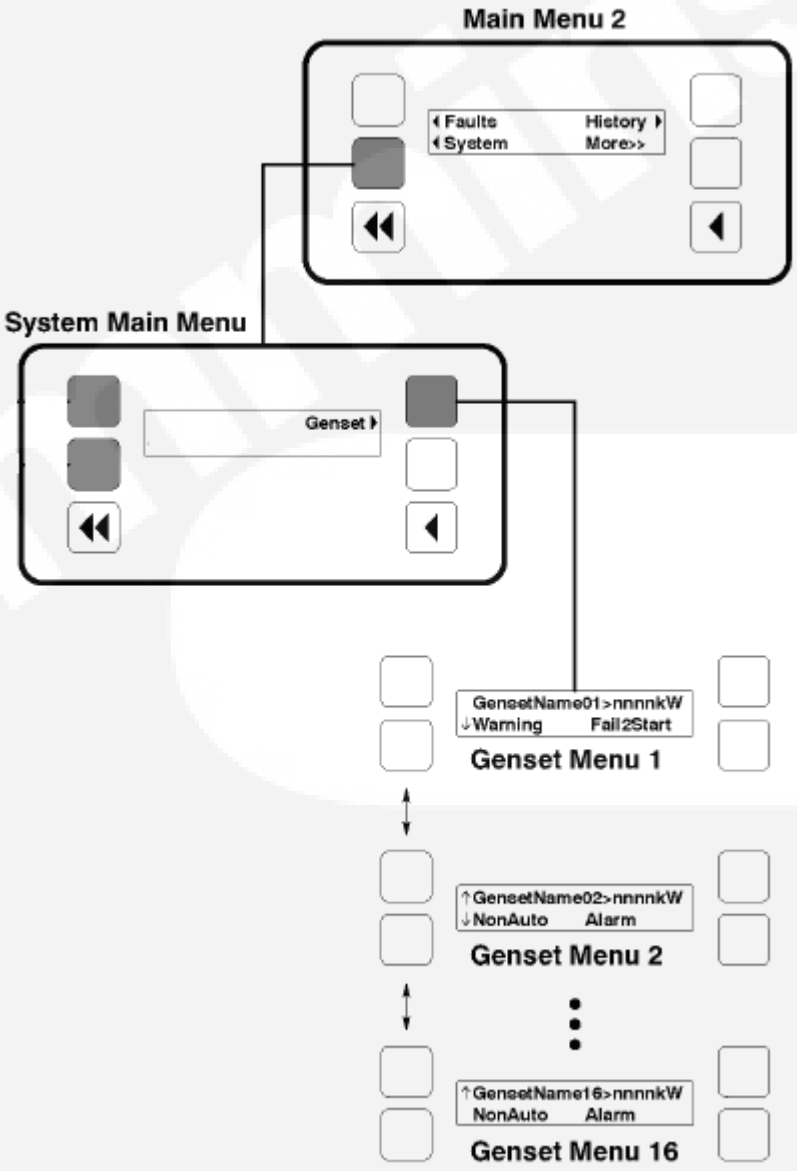

FIGURE 17. SYSTEM MENU

4.5.10 History Menu

Figure 18 on page 42 shows a block representation of the History menu. If you press the button next to the word "History" in the display, the first History submenu is displayed.

As shown in the diagram, the History menu has five submenus. This information is stored in non-volatile memory and will not be deleted due to loss of battery power.

- **Number of Starts submenu:** This submenu shows the number of engine starts.
- **Engine Hours submenu:** This submenu shows the number of operating hours for the engine.
- **Control Hours submenu:** This submenu shows the number of operating hours for the control.
- **Kilowatt Hours submenu:** This submenu shows the number of kilowatt (kW) or megawatt (MW) hours.
- **Genset Duty Cycle submenu:** This submenu shows the percent of genset operating hours that are less than 30 percent of rated load and percent of hours that are greater than 90 percent.

Press the buttons next to the ↑ and ↓ symbols in the digital display to navigate between the menus. Press the Previous Main Menu button to return to Main Menu 2. Press the Home button to return to Main Menu 1.

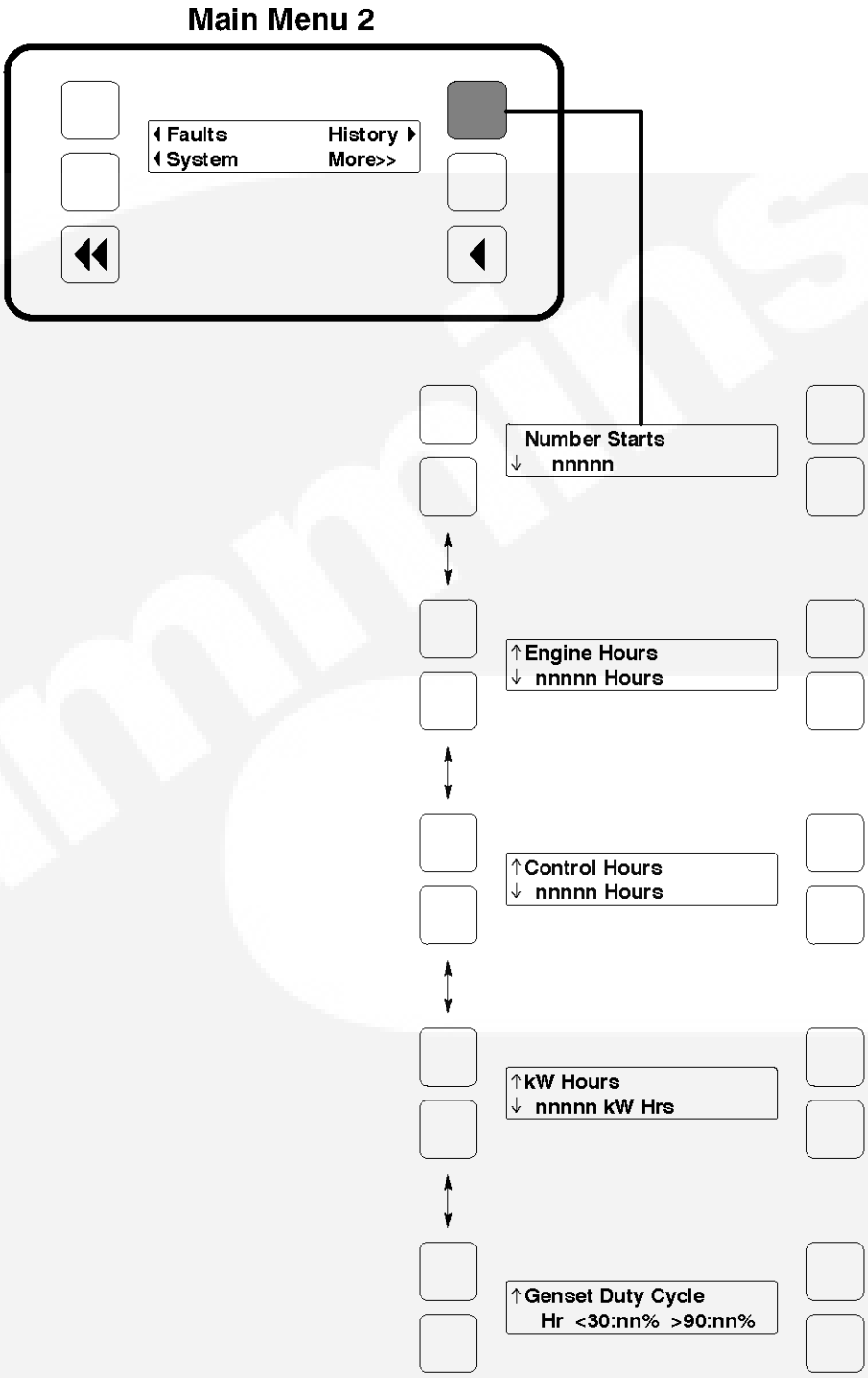

FIGURE 18. HISTORY MENU

4.5.11 About Menu

Figure 19 on page 43 shows a block representation of the About menu. If you press the button next to the word "About" in the display, the first About submenu is displayed.

As shown in the diagram, the About menu has three submenus.

- **Model submenu:** This submenu shows the generator set model.

- **Rating submenu:** This submenu shows the rating (Standby or Prime and number of kilowatts (kW)).
- **Software Version submenu:** This submenu shows the software version level. This information is required to service the generator set.

Press the buttons next to the ↑ and ↓ symbols in the digital display to navigate between the menus. Press the Previous Main Menu button to return to Main Menu 3. Press the Home button to return to Main Menu 1.

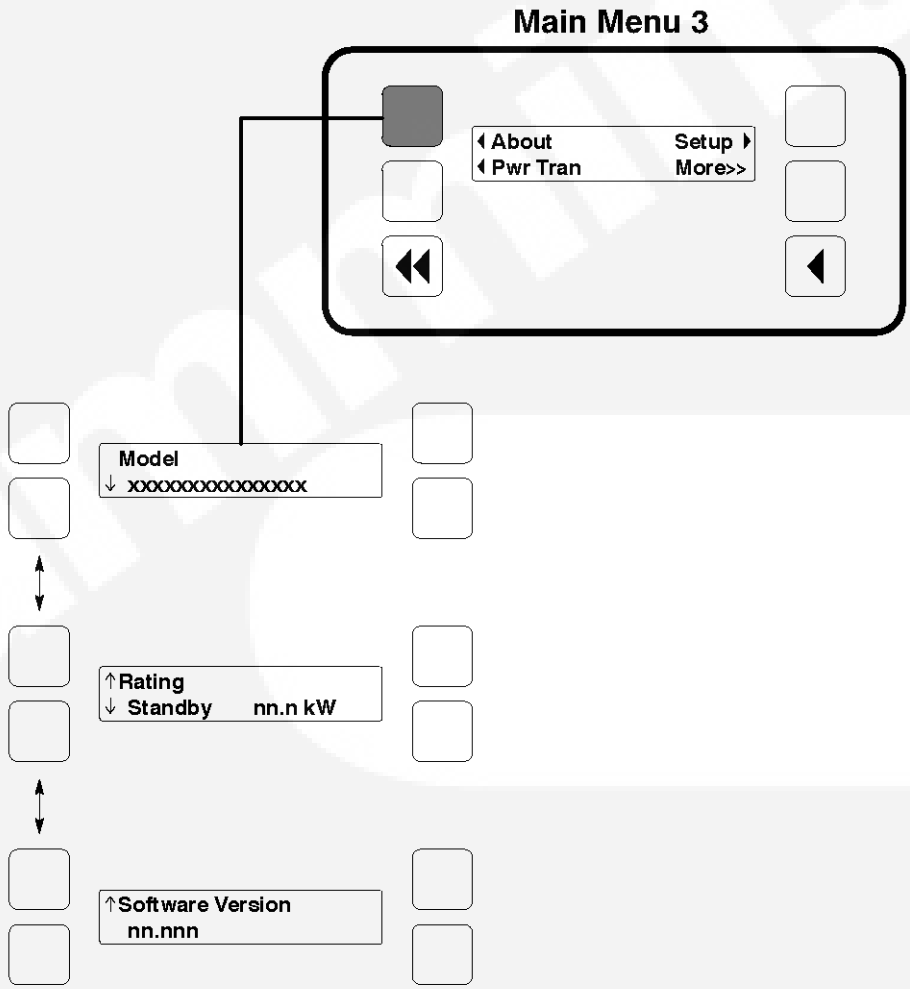

FIGURE 19. ABOUT MENU

This page is intentionally blank.

5 Operation - PCC 2100

5.1 Safety

Only trained and experienced personnel should carry out generator set operations. Before operating the system, the operator should become familiar with all the safety instructions, see Chapter 1 on page 1, together with the Health and Safety manual. Observe all of the WARNINGS and CAUTIONS at all times.

WARNING: Before operating the generator set become familiar with the equipment and how it is operated (including all controls, manually operated valves and alarm devices). Safe and efficient operation can ONLY BE achieved if the plant is operated correctly.

WARNING: Contacting high voltage components can cause severe personal injury or death by electrocution. Do not open the generator output box while the generator set is running. Read and observe all warnings and cautions in your generator set manuals.

CAUTION: Only technically qualified personnel should open the control housing. Voltages are present which can cause electrical shock, resulting in personal injury. Even with the power removed, improper handling of components can cause electrostatic discharge and damage circuit board components.

WARNING: Exhaust gases contain carbon monoxide, an odorless and colorless gas. Carbon monoxide is poisonous and can cause unconsciousness and death. Symptoms of carbon monoxide poisoning include:

- ***Dizziness***
- ***Nausea***
- ***Headache***
- ***Weakness and sleepiness***
- ***Throbbing in temples***
- ***Muscular twitching***
- ***Vomiting***
- ***Inability to think coherently***

IF YOU OR ANYONE ELSE EXPERIENCE ANY OF THESE SYMPTOMS, GET OUT INTO FRESH AIR IMMEDIATELY. If symptoms persist, seek medical attention. Shut down the unit and do not operate until it has been inspected and repaired.

Protection against carbon monoxide inhalation includes proper installation and regular, frequent visual and audible inspections of the complete exhaust system.

5.2 Introduction

This section describes the operation of the generator set. The text should be read in conjunction with the System Overview and the Control System Sections of this manual, together with the Operator's specific engine manual. This latter manual will contain further information regarding the running and care of the generator set and also specific equipment instructions that may differ from the standard generator set.

All indicators, control switches/buttons, and graphical display are located on the face of the Operator Panel.

5.3 Maintenance

To ensure maximum performance and reliability from your generator set, it is essential that certain components are inspected periodically and, where necessary, maintenance procedures are carried out, as detailed in **Chapter 6 on page 55**.

5.4 Starting

The following headings cover the systems used to start the generator set.

Before starting the generator set, make sure that the exhaust and fuel fittings are tight and properly positioned and that proper maintenance has been performed.

5.4.1 Starting - Safety Consideration

CAUTION: *One operator should be in complete charge, or working under the direction of someone who is in charge. Remember that, upon starting the engine, cables and switchgear will become energized, possibly for the first time. Furthermore, equipment that does not form part of the generator set installation may become electrically charged. Only authorized and competent personnel should carry out this work.*

CAUTION: *Do not use the Emergency Stop switch to shut down an engine unless a serious fault develops. The Emergency Stop push-switch must not be used for a normal shut-down as this will prevent a cooling down run in which the lubricating oil and engine coolant carry the heat away from the engine combustion chamber and bearings in a safe manner.*

CAUTION: *Avoid off-load running for other than short periods. A minimum loading of 30% is recommended. This loading will help to prevent the build up of carbon deposits in the injectors, due to unburnt fuel, and reduce the risk of fuel dilution of the engine lubricating oil. The engine must be shut down as soon as possible after the appropriate functions have been checked.*

5.4.2 Operator's Pre-start Checks

WARNING: Windings of high voltage, 601 to 15,000 volts, generator sets must be dry before the generator set is operated. Failure to make sure dry windings before start-up may result in catastrophic failure, severe personal injury and death.

- Fuel Supply - Make sure that the fuel tank is filled to the normal level and that all the valves required for operation are open. Make sure that there are no leaks and that all fittings are tight.
- Lubrication - Check the engine lubrication oil level and ensure that the correct level is always maintained.
- Coolant - Check the engine coolant level and ensure that the level is always maintained at the coolant expansion tank. Fill the cooling system to the bottom of the fill neck in the radiator fill or expansion tank. Do not check while the engine is hot.

NOTE: **Some radiators have two fill necks, both of which must be filled when the cooling system has been drained.**

CAUTION: Do not attempt to remove a radiator pressure cap while the generator set is running, or is stationary but hot. Hot coolant is under pressure in the radiator system. Contact with hot coolant can result in severe burns. Always allow it to cool before releasing the pressure and removing the cap.

CAUTION: It is essential that Cummins Power Generation's recommendations for the correct type and concentration of anti-freeze and DCA inhibitor are complied with. Warranty claims for damage will be rejected if the incorrect mix has been used. Consult your authorized distributor for the correct anti-freeze specifications and concentration for your operating conditions.

NOTE: **Generator sets may be shipped dry. They must be filled with the correct type and quantity of coolant before use. Be sure to check coolant level(s) before initial start.**

- Cooling Air Inlet / Outlets - Make sure that the cooling air inlets/outlets are unobstructed.
- Exhaust Outlet - Make sure that exhaust components are secured and not warped; that the exhaust outlet is unobstructed; that no combustible materials are near the system; and gases are discharged away from building openings. Make sure that there are no leaks and that all fittings are tight.
- Batteries - Make sure that the batteries are charged, that the electrolyte is at the correct level and that all connections are correct.
- Auxiliary AC Supplies - Make sure that all auxiliary equipment is receiving power from the customer's supply.
- Emergency Stop/Fire Detection Equipment - Make sure that all related equipment is fully operational.

5.4.3 Starting at the Control Panel (Manual Mode)

Turn the O/Manual/Auto switch to the Manual position and press the Manual Run/Stop button. This will activate the engine control system and the starting system. The starter will begin cranking and, after a few seconds, the engine will start and the starter will disconnect.

NOTE: **The InPower service tool is required to enable/disable the warm-up at idle feature and to adjust the time-out. When shipped from the factory, this feature is disabled.**

When the switch is in the Manual position, the control will complete the warm-up at idle feature if enabled. When the coolant reaches operating temperature or the warm-up time at idle time delay (0–300 seconds) is reached, whichever occurs first, the generator set will ramp to the rated speed and voltage.

When the switch is in the Manual position, the generator set can be operated in the idle mode (used for maintenance, troubleshooting, etc.). Refer to Section 4.5.7 on page 35 to enable/disable the idle feature.

If the engine does not start, the starter will disengage after a specified period of time and the control will indicate an overcrank shutdown.

The generator can be configured for a number of starting cycles (1–7) with set times for crank and rest periods for all starting modes (manual/remote). The default setting is for 3 start cycles, composed of 15 seconds of cranking and 15 seconds of rest.

To change the cycle number, and the crank and rest times, contact an authorized service center for assistance.

To clear a Fail to Start shutdown, place the O/Manual/Auto switch in the O position and press the Fault Acknowledge/Reset button. Wait two minutes for the starter motor to cool and then repeat the starting procedure. If the engine does not run after a second attempt, refer to the Troubleshooting section.

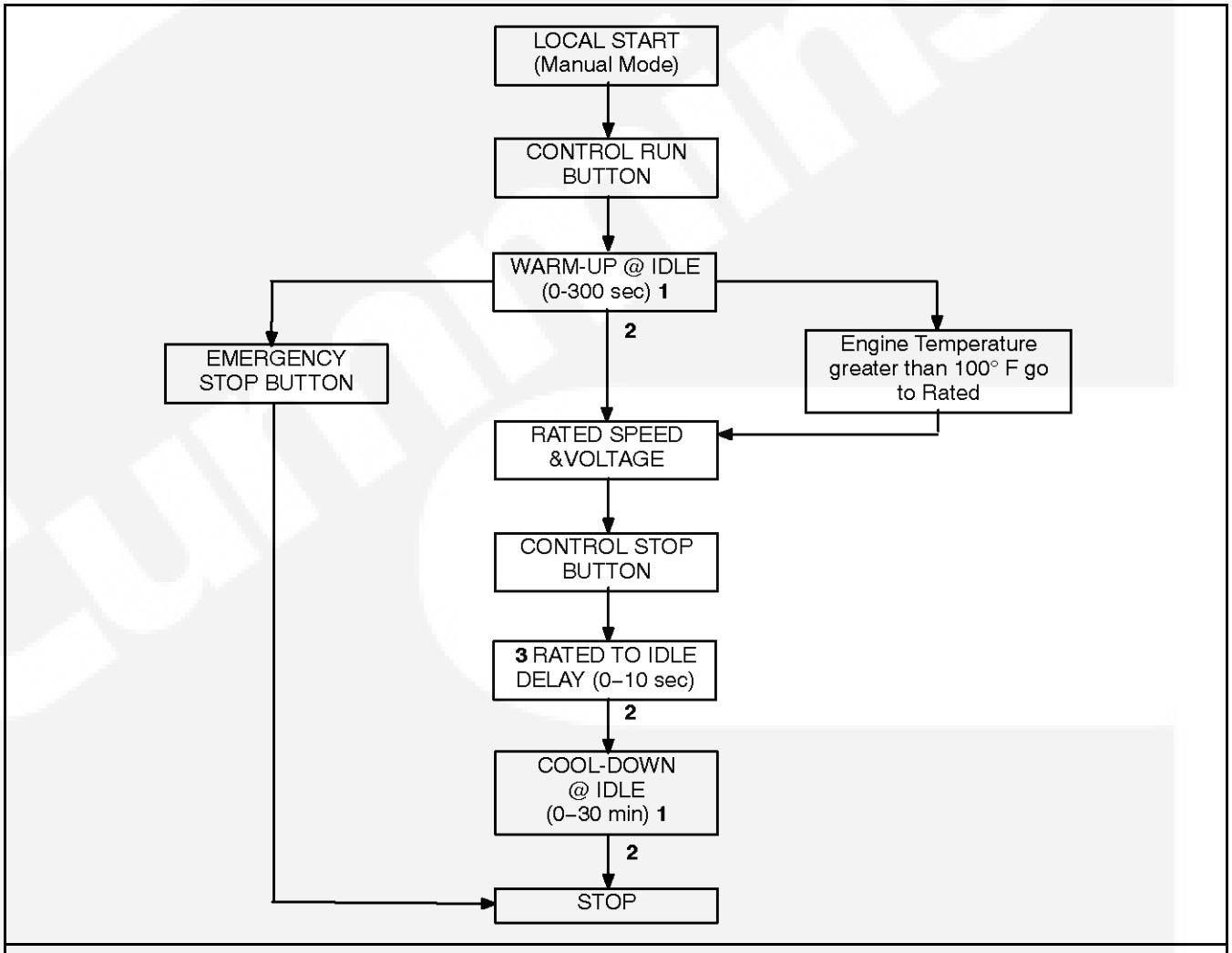

Note:
1. Warm-up/cooldown idle adjusted timeout with InPower
2. Timer expires
3. Beginning Version 2.303

FIGURE 20. STARTING AT THE CONTROL PANEL (MANUAL MODE)

5.4.4 Starting From a Remote Location (PTC or Remote Start Signal) - Auto Mode

Place the O/Manual/Auto switch in the Auto position. This allows the generator set to be started from a remote switch or device (e.g., transfer switch or optional PTC module).

In response to the Remote Start or the control detects the loss of S1 voltage (PTC option installed), the control lights the Remote Start indicator and initiates the starting sequence, shown in **Figure 21**.

If a switch is connected to the remote start input of the control and the PTC module is installed, this switch will function as a test switch. The PTC test sequence is shown in **Figure 22**.

When the switch is in the Auto position, the control will complete the time delay to start.

Refer to the **Section 4.5.7 on page 35** in this section to enable and change the time delay start/stop settings.

When the generator set is operating in the Remote Start Mode, removing the Remote Start Command does not shut off the engine if the load is more than 10%, the cooldown timer is set to zero, and the control is configured for a single unit (not in parallel). The generator set continues to operate until it runs out of fuel, the E-stop button is used, or the load is removed.

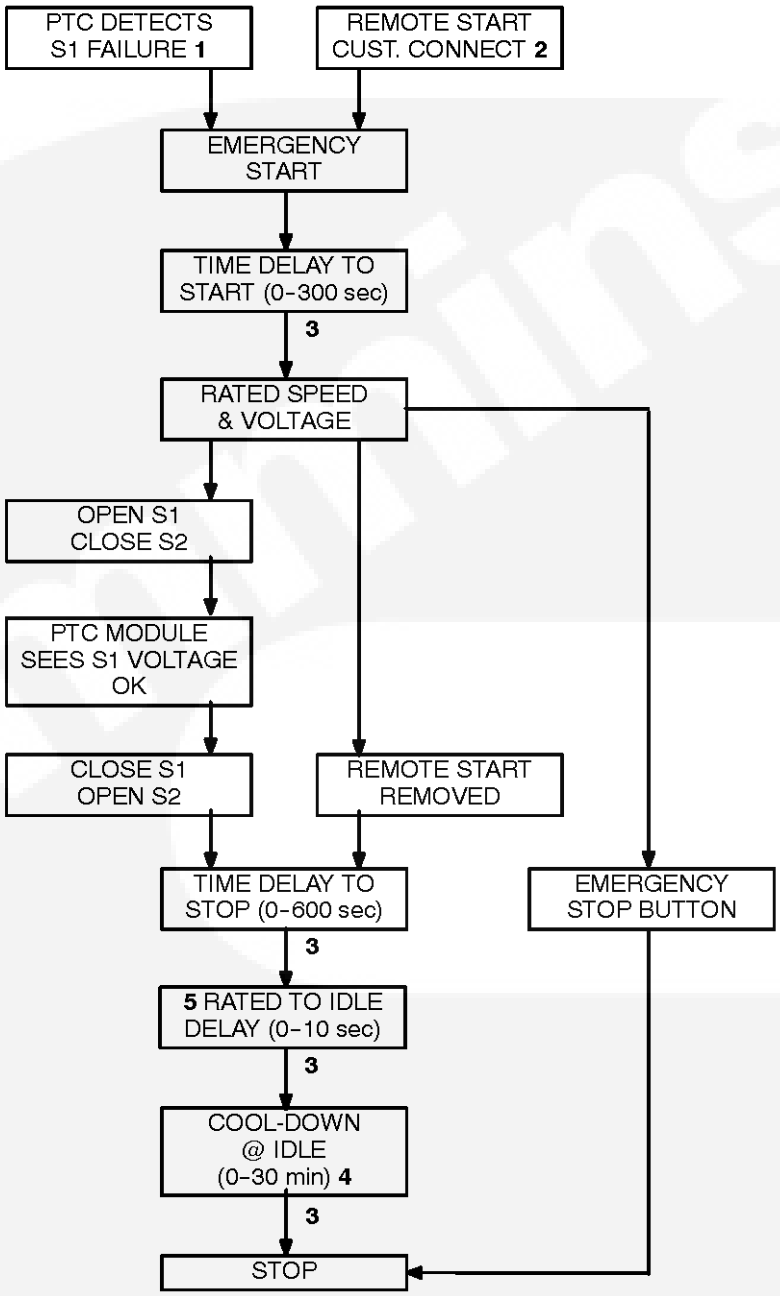

Note:
1. PTC feature installed only.
2. PTC feature not installed.
3. Timer exercise.
4. Cooldown adjusted timeout with InPower.
5. Beginning Version 2.303

FIGURE 21. STARTING FROM A REMOTE LOCATION (PTC OR REMOTE START SIGNAL) - AUTO MODE

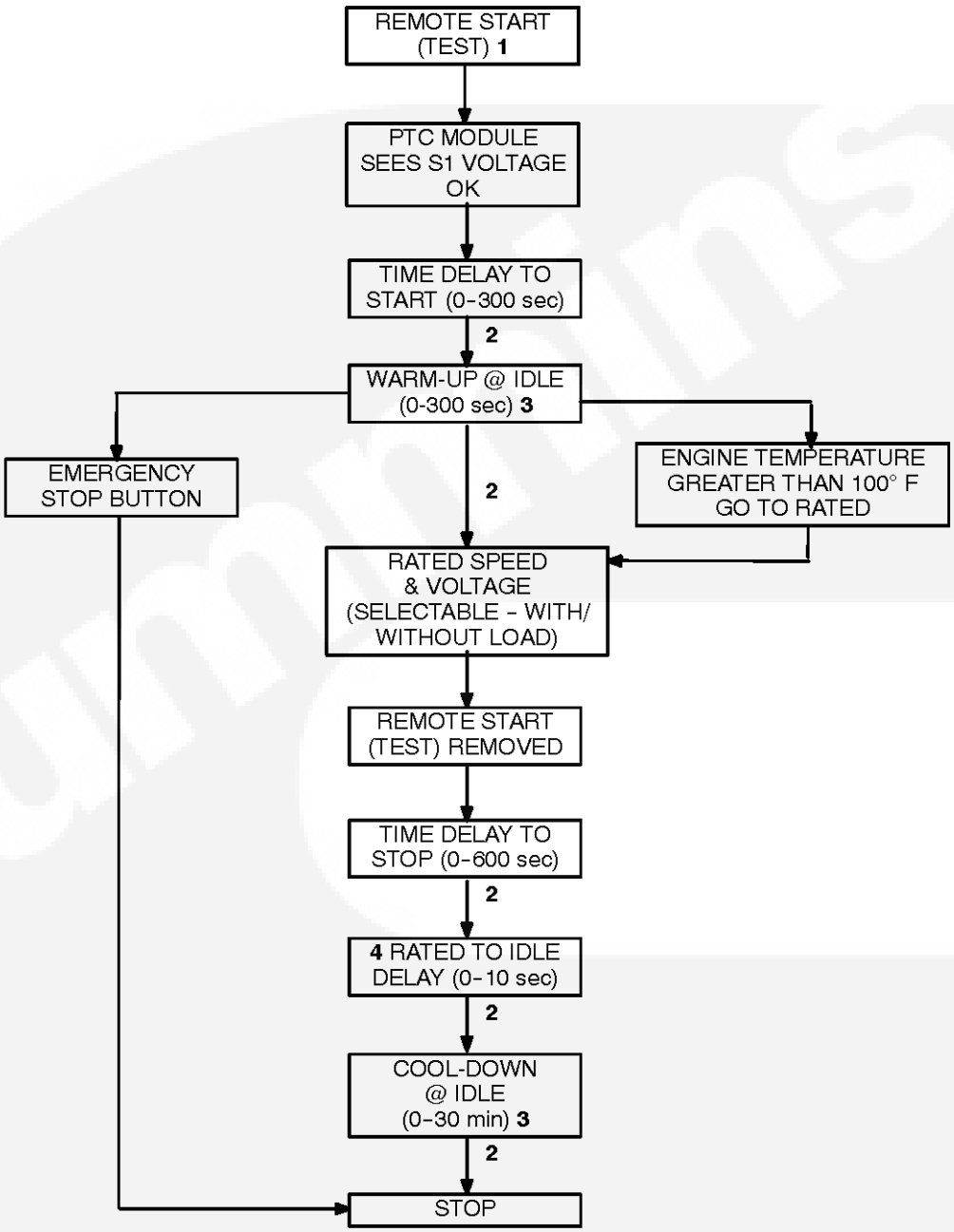

Note:
1. Remote (exercise) start sequence with PTC feature installed.
2. Timer expires.
3. Warm-up/cool-down idle adjustment time-out with InPower.
4. Beginning Version 2.303

FIGURE 22. PTC FEATURE REMOTE START TEST/EXERCISE SWITCH - AUTO MODE

5.4.5 Cold Starting With Loads

In accordance with NFPA 110, Cummins Power Generation recommends installing standby generator sets (life safety systems) equipped with engine jacket water coolant heaters in locations where the minimum ambient temperature is above 40º F (4º C). NFPA also requires that the engine jacket water coolant be maintained at a minimum of 90º F (32º C) and, for most applications, accept the emergency load in 10 seconds or less. Although most Cummins Power Generation generator sets will start in temperatures down to –25º F (–32º C) when equipped with engine jacket water coolant heaters, it might take more than 10 seconds to warm the engine up before a load can be applied when ambient temperatures are below 40º F (4º C).

The Engine Cold (Code 1435) message, in conjunction with illumination of the Warning LED, is provided to meet the requirements of NFPA 110. The engine cold sensing logic initiates a warning when the engine jacket water coolant temperature falls below 70º F (21º C). In applications where the ambient temperature falls below 40º F (4º C), a cold engine may be indicated even though the coolant heaters are connected. Under these conditions, although the generator set may start, it may not be able to accept load within 10 seconds. When this condition occurs, check the coolant heaters for proper operation. If the coolant heaters are operating properly, other precautions may be necessary to warm the engine before applying a load.

5.4.5.1 Checking Coolant Heater Operation

WARNING: Contact with the cooling system or engine can cause serious burns. Do not touch the cooling system or engine until they are cool.

Do not touch the cooling system outlet hose. The coolant heater is operating if radiant heat can be felt with your hand held close to the outlet hose and the engine is not running.

5.5 Stopping

5.5.1 Emergency Stop

The emergency stop button is located near the center of the upper part of the control panel. Push the button in for an emergency stop. The red Shutdown status LED is lit and the emergency stop message is displayed.

To reset:

1. Pull the emergency stop button out.
2. Turn the O/Manual/Auto switch to O.
3. Press the front panel Fault Acknowledge/ Reset button.
4. Select Manual or Auto, as required.

Emergency Stop shutdown status can be reset only at the operator control panel.

5.5.2 Stopping at Control Panel (Manual Mode)

If the set was started at the control panel (O/Manual/Auto switch in the Manual position), pressing the Manual Run/Stop button causes the set to complete its normal (Local Start) shutdown sequence.

The set stops after the cooldown at idle timer (0 to 30 minutes) has timed out.

NOTE: The InPower service tool is required to enable/disable the Cooldown At Idle feature. Contact an authorized service center for assistance.

Turning the O/Manual/Auto switch to the O position causes an immediate engine shutdown (bypasses Cooldown At Idle). If possible, this hot shutdown should be avoided to help prolong the reliability of the engine.

5.5.3 Stopping from Remote Location (Remote Stop Signal) - Auto Mode

If the control receives a remote stop signal or the control detects the return of S1 voltage (PTC option installed), the set completes its normal shutdown sequence. (The remote stop signal is actually the removal of the remote start signal to the control.)

The set stops after completing the Time Delay To Stop (0 to 600 seconds) and the cooldown at idle (0-30 minutes).

Refer to the Adjust submenu in on page 35 to enable and change the Time Delay To Stop setting. The InPower service tool is required to enable/disable the Cooldown At Idle feature. Contact an authorized service center for assistance.

5.6 Operating Recommendations

5.6.1 Running-in

Refer to the Maintenance section of this manual **Chapter 6 on page 55**. Special ‘running-in’ oils are not recommended for new or rebuilt Cummins engines. Use the same type of oil during ‘running-in’ as is used in normal operation.

The engine should be run at varying loads during the first few hours of operation to allow the components to 'bed in.' Avoid long periods of light load or full load running particularly during the early life of the engine.

5.6.2 No Load Operation

Periods of no-load operation should be held to a minimum. If it is necessary to keep the engine running for long periods of time when no electric output is required, best engine performance will be obtained by connecting a load of at least 30% rated load, but not to exceed rated load. Such a load could consist of a heater element or load bank.

5.6.3 Exercise Period

Generator sets on standby duty must be able to go from a cold start to being fully operational in a matter of seconds. This can impose a severe burden on engine parts.

Regular exercising keeps engine parts lubricated, prevents oxidation of electrical contacts and in general helps provide reliable engine starting.

Exercise the generator set at least once a month for a minimum of 30 minutes, under not less than 30 percent of the nameplate rating.

5.6.4 Low Operating Temperature

Use a coolant heater if a separate source of power is available. The optional heater will help provide reliable starting under adverse weather conditions. Be sure the voltage of the separate power source is correct for the heater element rating.

CAUTION: To avoid damage to the heater, be sure the cooling system is full before applying power to the heater.

5.6.5 High Operating Temperature

Refer to the generator set nameplate or the *Specification/Data Sheet* for the maximum ambient operating temperature, if applicable.

6 Maintenance

All maintenance tasks must be assessed for health and safety risks, the preventative measures identified must be actioned. Accompaniment is required for tasks where the presence of someone else will add significantly to the safety of the task.

Read, understand, and comply with all Caution and Warning notes in this section, those contained within **Chapter 1 on page 1**, and those contained within the documentation supplied with the generator set.

Ensure adequate lighting and staging (where required) are installed.

CAUTION: Only authorized and qualified maintenance technicians, who are familiar with the equipment and its operation, should carry out maintenance.

WARNING: Dependent upon the control system fitted, this unit may operate automatically and could start without warning.

CAUTION: Before carrying out any maintenance work, become familiar with ***Section 1.3 on page 2****, together with all the documentation supplied with the generator set.*

CAUTION: Always disconnect a battery charger from its AC source before disconnecting the battery cables. Failure to do so can result in voltage spikes high enough to damage the DC control circuits of the generator set.

WARNING: Accidental starting of the generator set while working on it can cause severe personal injury or death. Prevent accidental starting by disconnecting the starting battery cables (negative [–] first).

Ensure battery area has been well-ventilated before servicing the battery. Arcing can ignite explosive hydrogen gas given off by batteries, causing severe personal injury. Arcing can occur when cables are removed or replaced, or when the negative (–) battery cable is connected and a tool used to connect or disconnect the positive (+) battery cable touches the frame or other grounded metal part of the generator set.

Insulated tools must be used when working in the vicinity of the batteries. Always remove the negative (–) cable first and reconnect last.

Make sure hydrogen from the battery, engine fuel and other explosive fumes are fully dissipated. This is especially important if the battery has been connected to a battery charger.

WARNING: To complete maintenance tasks at height refer to local legislative requirements. Suitable equipment for performing these tasks must be used in accordance with the local guidelines and legislation. Failure to follow these instructions can result in severe personal injury or death.

WARNING: Do not use the skid (bedframe) or any part of the generator set as a means of access. Use of the generator set as access may result in severe personal injury or death and/or property and equipment damage.

WARNING: Before carrying out any maintenance work, lock off for safe working:

1. ***Press the off mode switch on the generator set control panel.***
2. ***As an additional precaution, press the Emergency Stop Button, and hold in for 30 seconds.***
3. ***Isolate all supplies to the generator set.***
4. ***Isolate the battery charger.***
5. ***Disconnect the battery.***

6. ***Remove the starter control wires.***
7. ***A suitable warning plate stating 'Maintenance in Progress' should be displayed prominently.***

WARNING: Some panel internal components may have live exposed terminations even if the generator set is not running. Isolate all external electrical supplies prior to access of the control panel. Voltages are present which can cause electrical shock, resulting in personal injury. Even with the power removed, improper handling of components can cause electrostatic discharge and damage circuit board components.

6.1 Locking the Generator Set Out of Service

Before any work is carried out for maintenance, etc., the generator set must be immobilized. Even if the generator set is put out of service by pressing the Off switch on the Operator Panel, the generator set cannot be considered safe to work on until the engine is properly immobilized as detailed in the following procedures.

NOTE: Refer also to the Operator's engine specific manual. This manual contains specific equipment instructions that may differ from the standard generator set.

WARNING: Before carrying out any maintenance, isolate all supplies to the generator set and any control panels. Render the set inoperative by disconnecting the plant battery.

WARNING: If the engine has been running recently, explosive gases (given off during battery charging) may be present in the vicinity of the batteries. Ignition of battery gases can cause severe personal injury. Make sure the area is well ventilated before disconnecting batteries.

6.1.1 Immobilizing for Safe Working

NOTE: Shut down the engine first.

To immobilize the engine:

1. Press the Off mode switch on the Operator Panel.
2. Press the Emergency Stop button. This will prevent the starting of the generator set regardless of the Start signal source and will therefore provide an additional safety step for immobilizing the generator set.

NOTE: When this Stop button is pressed, the Operator Panel will indicate the Shutdown condition by illuminating the red Shutdown status LED and displaying a message on the graphical LCD display.

NOTE: This fault will affect the Fault History memory bank.

3. As an additional precaution, thoroughly ventilate the plant room before disconnecting any leads.
4. Isolate and lock off the supply to the heater, where fitted.
5. Isolate and lock off the supply to the battery charger, where fitted.
6. Isolate the fuel supply to the engine.

7. Disconnect the starting batteries and control system batteries, (if separate). Disconnect the negative (**–**) cable first.
8. Fit warning notices at each of the above points to indicate Maintenance in Progress - Plant Immobilized for Safe Working.

6.1.2 Periodic Maintenance

The periodic maintenance procedures should be performed at whichever interval occurs first. At each scheduled maintenance interval, perform all previous maintenance checks that are due for scheduled maintenance.

The tabular data that follows give the recommended service intervals for a generator set on Standby service. If the generator set will be subjected to Prime usage or extreme operating conditions, the service intervals should be reduced accordingly. Consult your authorized distributor.

Some of the factors that can affect the maintenance schedule are:

- Use for continuous duty (prime power)
- Extremes in ambient temperature
- Exposure to elements
- Exposure to salt water
- Exposure to windblown dust or sand.

Consult with an authorized distributor if the generator set will be subjected to any extreme operating conditions and determine a suitable schedule of maintenance. Use the running time meter to keep an accurate log of all service performed for warranty support. Perform all service at the time period indicated, or after the number of operating hours indicated, whichever comes first.

6.1.2.1 Periodic Maintenance Schedule

TABLE 5. PERIODIC MAINTENANCE SCHEDULE - ONE DAY TO TWO YEARS

MAINTENANCE ITEMS	Daily or after 8 Hours	Weekly or after 50 Hours [6]	3 Months or after 250 Hours[4,6]	12 Months or after 500 Hours[4,6]	1000 Hours[4,6]	12 Months or after 1500 Hours [4,6]	2000 Hours [4,6]	2 Years [4,6]
Perform maintenance tasks as specified using Daily or Hourly periods – whichever is the sooner								
Check fuel level in tank	■							
Check Fuel lines and hoses	■[1]							
Check bedframe fluid containment (where fitted), drain if necessary	■[7]							
Check engine oil level	■[1]							
Check coolant level of radiator(s) (water jacket & LTA)	■[4]							
Check cooling fan blades	■							
Check all exhaust components, and hardware (fittings, clamps, fasteners, etc.)	■[1]							

MAINTENANCE ITEMS	Daily or after 8 Hours	Weekly or after 50 Hours [6]	3 Months or after 250 Hours[4,6]	12 Months or after 500 Hours[4,6]	1000 Hours[4,6]	12 Months or after 1500 Hours [4,6]	2000 Hours [4,6]	2 Years [4,6]
Check drive belt, condition and tension	■[2]							
Check air cleaner restriction indicator (where fitted)	■							
Check air intake system for leaks	■							
Check trailer equipment	■[7]							
Check alternator	■[11]		■[12]				■	
Check operation of Emergency Stop Button		■						
Check battery electrolyte level				■				
Check coolant lines and radiator hoses for wear and cracks				■[8]				
Check electrical connections (battery, starter motor and alternator connections)				■[8,9]				
Check engine ground				■[9]				
Check engine valve lash					■[10]			
Check alternator stator winding insulation resistance						■[13]		
Check alternator Bearings						■[8]		
Check connections in alternator terminal box						■		
Check aftercooler core							■	
Check engine mounts							■	
Check starting motor							■	
Check turbocharger							■	
Check water pump							■	
Drain water from fuel system primary filter/water separator	■[3]							
Drain fuel tank water and sediment		■[3]						
Clean radiator matrix			■					
Clean air cleaner element				■[8]				
Replace engine oil and filter		■[5]		■				
Replace water separator element				■				
Replace fuel system secondary filter				■				
Replace cooling system coolant								■

MAINTENANCE ITEMS	Daily or after 8 Hours	Weekly or after 50 Hours [6]	3 Months or after 250 Hours[4,6]	12 Months or after 500 Hours[4,6]	1000 Hours[4,6]	12 Months or after 1500 Hours [4,6]	2000 Hours [4,6]	2 Years [4,6]
■[1] – Check for oil, fuel, coolant, and exhaust system leaks. Check exhaust system audibly and visually with the generator set running. ■[2] – Visually check belt for evidence of wear or slippage. Replace if hard or brittle (to be undertaken by a Service Engineer). ■[3] – Drain one cup, or more, of fuel to remove water and sediment. ■[4] – To be undertaken by a Service Technician. ■[5] – Engine oil and filter should be replaced after the initial running-in period of 50 hours. Contact your authorized distributor. ■[6] – All maintenance checks and inspections listed at lesser maintenance intervals must be carried out at this time. ■[7] – Visually check trailer equipment/walk around inspection of generator set. ■[8] – Replace as necessary. ■[9] – Clean as necessary. ■[10] – Adjust as necessary. ■[11] – Visual inspection. ■[12] – Visual inspection and running audible check. ■[13] – Record resistance value.								

TABLE 6. PERIODIC MAINTENANCE SCHEDULE - 3000 HOURS TO SIX YEARS

Maintenance Items	3000 Hours[3,4]	2 Years or 3000 Hours[3,4]	4000 Hours	3 Years or 4500 Hours[3,4]	3 Years or 6000 Hours[3,4]	6 Years or 12000 Hours[3,4]
Check fuel injectors	■[1]					
Check aftercooler core		■[2]				
Check alternator vibration levels					■[2]	
Check alternator bearing housings						■
Check alternator winding condition						■
Check alternator rotating diode assembly						■
Replace cooling system coolant (commercial heavy duty)			■			
Replace cooling system coolant (ELC)						■
Replace alternator bearings						■
Replace alternator NDE o-ring						■
Add cooling system coolant extender (ELC)					■	
Clean and regrease alternator bearings				■		
■[1] – Replace as necessary. ■[2] – Clean as necessary. ■[3] – To be undertaken by a Service Technician. ■[4] – All maintenance checks and inspections listed at lesser maintenance intervals must be carried out at this time.						

6.2 Daily or Refueling Maintenance Procedures

Monitor fluid levels, oil pressure, and coolant temperature frequently. During operation, be alert for mechanical problems that could create unsafe or hazardous conditions. The following sections cover several areas that should be frequently inspected for continued safe operation.

NOTE: Components that have guards against inadvertent touching must be visually inspected only. Do not remove the guards to do the inspection.

6.2.1 General Information

Preventative maintenance begins with day-to-day awareness of the condition of the generator set.

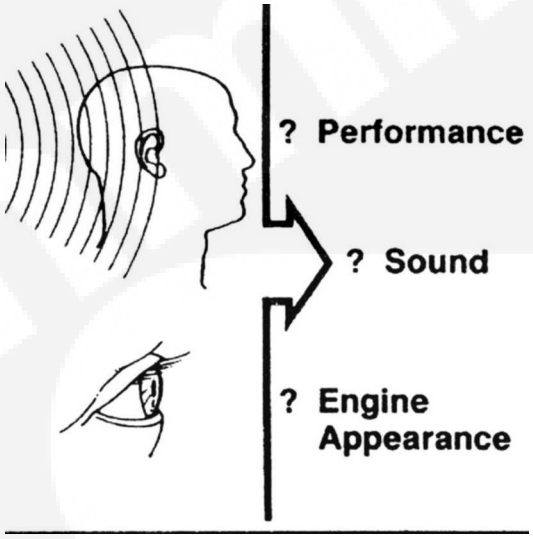

FIGURE 23. DAY-TO-DAY AWARENESS

Before starting the generator set, check the oil and coolant levels and look for:

- Leaks
- Loose or damaged parts
- Worn or damaged belts
- Any change in engine or generator set appearance.

6.2.2 Engine Operation Report

The engine must be maintained in good mechanical condition if the operator is to obtain optimum satisfaction from its use. Running reports are necessary to enable programmed or emergency servicing to be carried out.

Comparison and intelligent interpretation of the running report, together with a practical follow-up action will eliminate most failures and emergency repairs.

Most engine problems give an early warning. Look and listen for changes in engine performance, sound, or appearance that can indicate service or repair is needed. Some engine changes to look for and report on are:

- Low lubricating oil pressure

- Low power
- Abnormal water or oil temperature
- Unusual engine noise
- Excessive smoke
- Excessive use of coolant, fuel or lubricating oil
- Any coolant, fuel or lubricating oil leaks
- Misfire
- Vibration
- Excessive exhaust smoke.

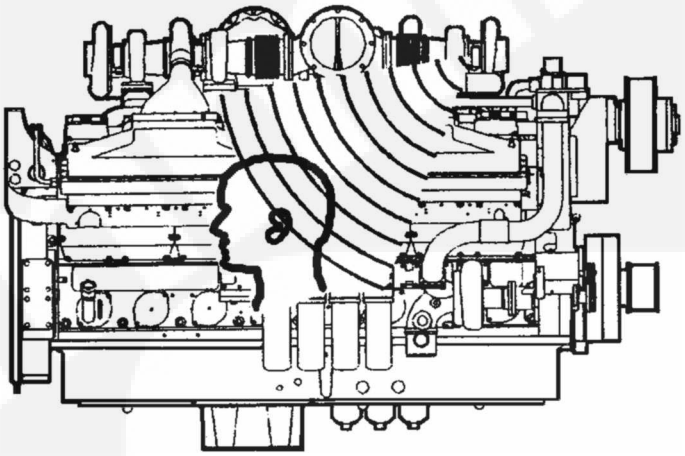

FIGURE 24. LOOK AND LISTEN FOR CHANGES IN PERFORMANCE

6.3 Cooling System

WARNING: ***Contact with hot coolant can result in serious scolding. Allow cooling system to cool before releasing pressure and removing water jacket radiator cap or LTA expansion tank cap.***

CAUTION: Loss of coolant can allow engine to overheat without protection of shutdown device, and cause severe damage to the engine. Maintain coolant level for proper operation of high engine temperature shutdown system.

6.3.1 Coolant Level - Check

WARNING: ***Do not remove the radiator cap from a hot engine; wait until the temperature is below 50 °C (122 °F) before removing pressure cap. Failure to do so can result in personal injury from heated coolant spray or steam. Remove filler cap slowly to release coolant system pressure.***

CAUTION: Avoid prolonged or repeated skin contact with antifreeze. Comply to all local health and safety regulations/codes when handling or disposing of antifreeze.

NOTE: Never use a sealing additive to stop leaks in the coolant system. This can result in a blocked coolant system and inadequate coolant flow causing the engine to overheat.

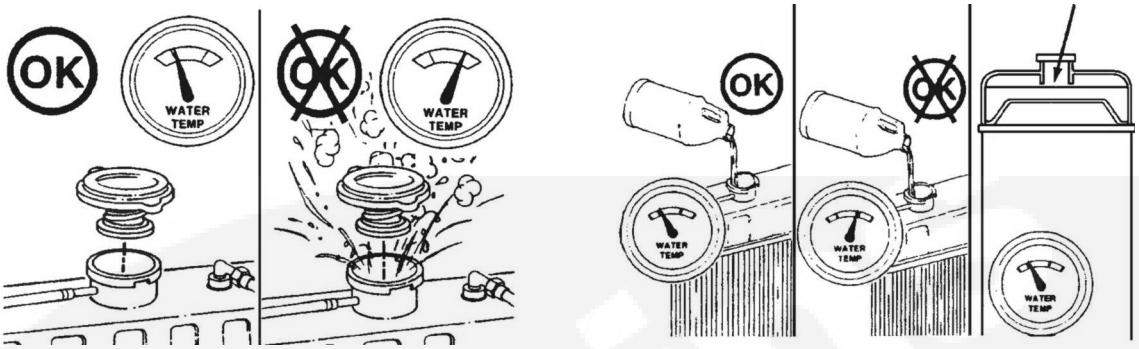

FIGURE 25. COOLANT LEVEL PROCEDURE

Coolant level must be checked daily. The standard coolant concentration is 50% Ethylene Glycol and water, this concentration must be maintained. Warranty claims for damage will be rejected if the incorrect mix of anti-freeze has been used. Consult your authorized distributor for the correct anti-freeze specifications and concentration for your operating conditions. The recommended antifreeze is Fleetguard® Compleat ES which is a low-silicate antifreeze, or its equivalent.

CAUTION: Do not add cold coolant to a hot engine. Engine castings can be damaged. Allow the engine to cool to below 50 °C (122 °F) before adding coolant.

NOTE: On applications that use a coolant recovery system, check to make sure the coolant is at the appropriate level on the coolant recovery tank dependent on engine temperature.

Fill the cooling system with coolant to the bottom of the fill neck in the radiator or expansion tank, with the coolant temperature at 50 °C (122 °F) or lower.

NOTE: Some radiators have two fill necks, both of which must be filled. Refer to the generator set specific drawings supplied with the set.

6.3.2 Cooling Fan - Inspect

WARNING: Personal injury can result from a fan blade failure. Never pull or pry on the fan, this can damage the fan blade(s) and cause fan failure.

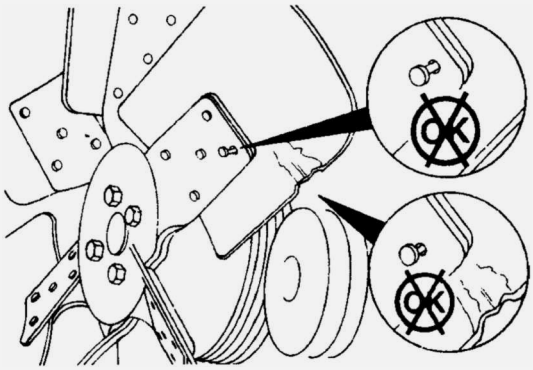

FIGURE 26. FAN INSPECTION

A visual inspection of the cooling fan is required daily. Check for cracks, loose rivets, and bent or loose blades.

Contact your authorized distributor if the fan is damaged.

6.3.3 Drive Belt - Inspection

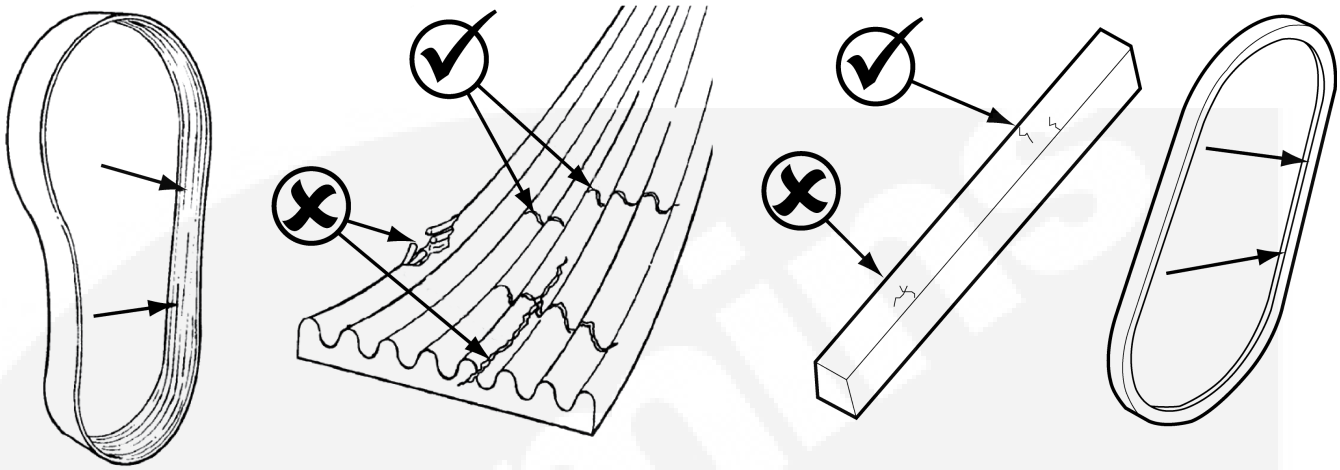

FIGURE 27. DRIVE BELT INSPECTION

Visually inspect the belt through the guarding.

Check for:

- Intersecting cracks. Small transverse (across the belt width) cracks are acceptable. Longitudinal (direction of belt length) cracks that intersect with transverse cracks are NOT acceptable.
- Frays or pieces of material missing.
- Glazed or cracked side walls.
- Uneven wear on sidewalls of belt.

CAUTION: Do not mix old and new V-belts on the same drive.

Contact your authorized distributor to have worn belts replaced.

Visually inspect sheaves through the guarding.

Check for:

- Damaged or worn grooves.
- Breaks on flanges of grooves
- Frays or pieces of material missing.
- Glazed or cracked side walls.
- Uneven wear on sidewalls of belt.

CAUTION: V-Belts should never ride in the bottom of the groove. Damaged or worn grooves should not be used.

NOTE: Keep foreign materials away from sheaves and belts as this may cause belt slip.

Contact your authorized distributor to have worn sheaves replaced.

6.3.4 Radiator - Check

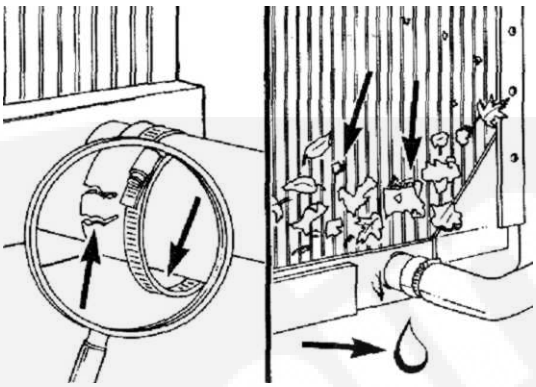

FIGURE 28. RADIATOR CHECK

Check for damaged hoses and loose and damaged hose clamps.

Inspect the exterior of the radiator (through the guarding) for obstructions. During the service life of a radiator a build up of foreign matter can obstruct the flow of air through the radiator cores, reducing the cooling capability. To continue the efficiency of the radiator, the core will require cleaning.

Cleaning of the radiator core must only be undertaken by suitably trained and experienced service personnel.

6.4 Engine Oil – Level Check

WARNING: Crankcase pressure can blow out hot oil and cause severe burns. Do NOT check oil while the generator set is operating.

CAUTION: Do not operate the engine with the oil level below the low mark or above the high mark. Overfilling can cause foaming or aeration of the oil while operation below the low mark may cause loss of oil pressure.

CAUTION: Prolonged and repeated skin contact with used engine oils can cause skin disorders or other bodily injury. Comply to all local health and safety regulations/codes when handling or disposing of used engine oil.

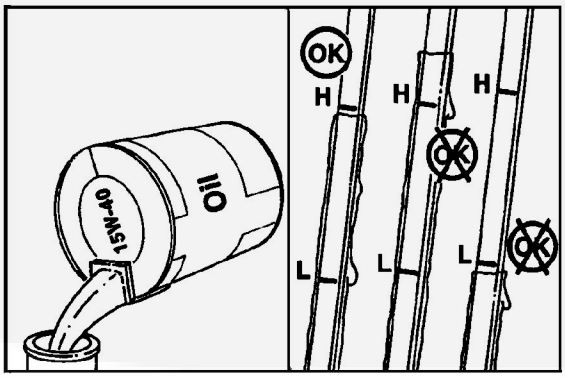

FIGURE 29. ENGINE OIL LEVEL CHECK

Check the engine oil level when the generator set is not running.

Never operate the engine with the oil level below the L (Low) mark, or above the H (High) mark. Wait at least fifteen minutes, after shutting off the engine, before checking the oil level. This allows time for the oil to drain back to the oil pan.

NOTE: **Use high-quality 15W-40 multi-viscosity lubricating oil such as Cummins Premium Blue® or its equivalent. Consult your authorized distributor for the correct lubricating oil for your operating conditions.**

6.5 Fluid Containment

The bedframe fluid containment area (if applicable) must be inspected at regular intervals and any liquid should be drained off and disposed off in line with local health and safety regulations. Failure to perform this action may result in spillage of liquids likely to contaminate the surrounding area.

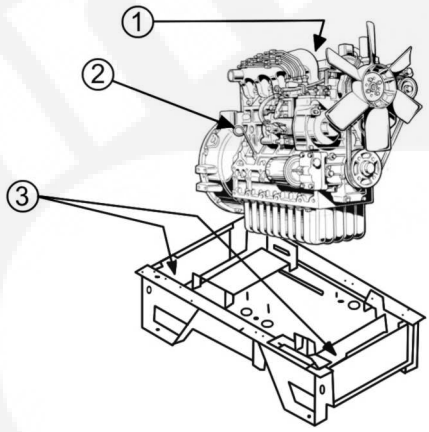

1	Oil Filler
2	Dip Stick
3	Containment Area

FIGURE 30. FLUID CONTAINMENT INSPECTION

Any other fluid containment area must also be checked and emptied, as above.

6.6 Hoses and Fuel Lines - Check

WARNING: ***Moving parts can cause severe personal injury or death. Use extreme caution around hot manifolds, moving parts, etc.***

To prevent serious burns, avoid contact with hot metal parts such as radiator, turbocharger and exhaust system.

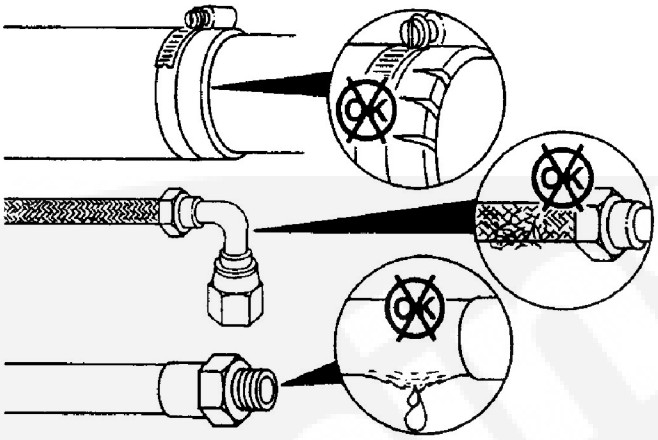

FIGURE 31. HOSES AND FUEL LINE INSPECTION

With the generator set operating, inspect the supply lines, return lines, filters, and fittings for leaks. Check any flexible sections for cuts, cracks and abrasions and ensure they are not rubbing against anything that could cause breakage. If any leaks are detected, shut down the generator set (if possible). Contact your authorized distributor and have the leaks corrected immediately.

6.7 Normal Duty Air Cleaner

6.7.1 Air Cleaner Element Removal

Normal duty air cleaners combine centrifuge cleaning with element filtering before air enters the engine.

CAUTION: Holes, loose-end seals, dented sealing surfaces, corrosion of pipes, and other forms of damage render the air cleaner inoperative and require immediate element replacement or engine damage can occur.

NOTE: Cummins Inc. does not recommend cleaning paper-type air cleaner elements. Elements that have been cleaned will clog, and airflow to the engine will be restricted.

1. Before disassembly, wipe dirt from the cover and the upper portion of the air cleaner.
2. Loosen the wing bolt (2) and remove the band clamp securing the dust pan (1).
3. Remove the dust shield (3) from the dust pan (1).
4. Clean the dust pan and shield.
5. Remove the wing nut (5) that secures the air cleaner element (4) in the air cleaner housing.
6. Inspect the rubber sealing washer on the wing nut.
7. Remove the dirty cleaner element (4). Dispose of the dirty element in accordance with local environmental agency requirements.

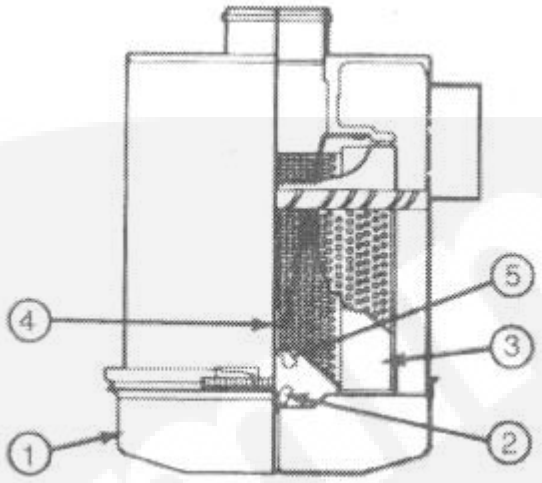

No.	Description	No.	Description
1	Dust Pan	4	Air Cleaner Element
2	Wing Bolt	5	Wing Nut
3	Dust Shield		

FIGURE 32. NORMAL DUTY AIR CLEANER

6.7.2 Air Cleaner Element Installation

1. Install the air cleaner element (4) in the air cleaner housing.
2. Inspect the rubber sealing washer and make sure it is in place under the wing nut (5).
3. Tighten the wing nut (5) that secures the element (4) in the air cleaner housing.
4. Assemble the dust shield (3) and the dust pan (1).
5. Position the dust shield (3) and dust pan (1) on the air cleaner housing and secure them with the band clamp wing bolt (2).

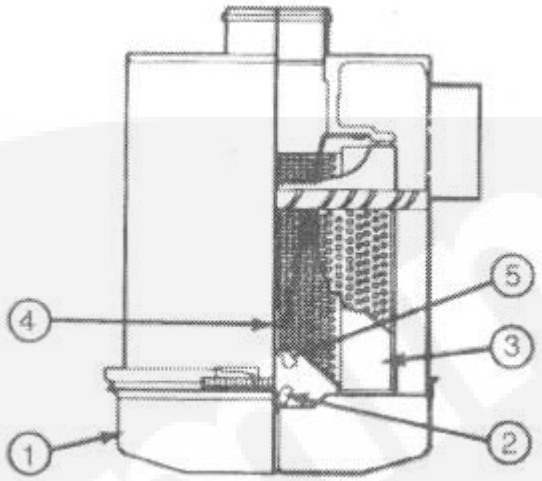

No.	Description	No.	Description
1	Dust Pan	4	Air Cleaner Element
2	Wing Bolt	5	Wing Nut
3	Dust Shield		

FIGURE 33. NORMAL DUTY AIR CLEANER

6.8 Exhaust System

WARNING: Exhaust components become very hot when the generator set is in use and remain hot for a period of time after the generator set has been shut down. These components can cause severe personal injury or death from contact. Allow these components to cool completely before performing any maintenance tasks.

WARNING: Inhalation of exhaust gases can result in serious personal injury or death. Be sure deadly exhaust gas is piped outside and away from windows, doors or other inlets to buildings. Do not allow to accumulate in habitable areas.

WARNING: Moving parts can cause severe personal injury or death. Use extreme caution around hot manifolds, moving parts, etc.

With the generator set operating, inspect the entire exhaust system visually and audibly including the exhaust manifold, muffler, and exhaust pipe without removing guarding and panels. Check for leaks at all connections, welds, gaskets and joints, and ensure that exhaust pipes are not heating surrounding areas excessively. If any leaks are detected, shut down the generator set (if possible). Contact your authorized distributor and have the leaks corrected immediately.

6.9 Generator Set Output - AC Electric System

Check the following while the generator set is operating:

- Frequency: The generator set frequency should be stable and the reading should be the same as the generator set nameplate rating (50 Hz / 1500 RPM or 60 Hz / 1800 RPM).

- AC Voltage: At no load, the line-to-line voltage(s) should be the same as the generator set nameplate rating.
- AC Ammeter: At no load, the current readings should be zero. With a load applied, each line current should be similar.
- Panel Lamps: When the Operating Panel is first connected to the DC supply, the system runs a check by illuminating each of the indicator lamps in turn.

6.10 DC Electrical System

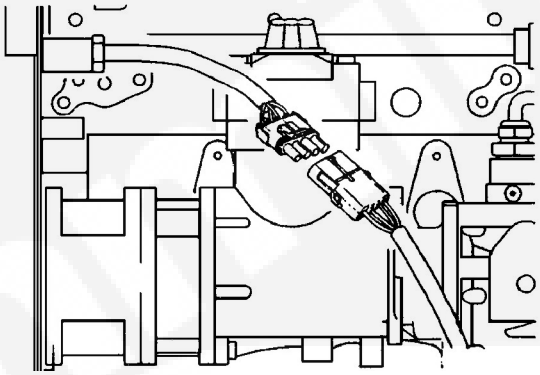

FIGURE 34. CHECK HARNESS CONNECTIONS

Check the terminals on the batteries for clean and tight connections. Loose or corroded connections create resistance, which can hinder starting. Clean and reconnect the battery cables if loose. Always disconnect both ends of the negative battery cable. Reconnect one end of the cable to the negative battery terminal and the other end to ground. This will ensure that any arcing will be away from the battery and least likely to ignite explosive battery gases.

WARNING: Ignition of explosive battery gases can cause severe personal injury. Do not use naked flames, smoke or cause sparks while servicing batteries.

6.11 Lead Acid Batteries

Batteries are an essential part of any standby generator system and some 90% of all generator failures are due to batteries.

It is therefore vital that batteries are stored, commissioned, and maintained as detailed here. Reference should also be made to the Battery Manufacturer's instructions.

Batteries are usually supplied with the generator in 'dry-charged' form. In order to commission dry-charged lead-acid batteries, pre-mixed electrolyte of the correct type and specific gravity must be added to the cells of the battery.

6.11.1 Storage

Dry-charged batteries should be stored in a cool, dry place, upright and with the vent caps securely in place.

Filled and charged batteries must be stored in a cool, dry, well ventilated place. Make sure that the vent caps are securely screwed down, or pushed home.

Batteries must never be stacked one on top of another and must be protected from the floor by a wooden pallet or suitably thick cardboard sheet

6.11.2 Safety Precautions

The handling and proper use of lead-acid batteries is not hazardous providing the correct precautions are observed and personnel are trained in their use.

6.11.2.1 General Precautions

CAUTION: Never lay tools or metal objects across the top of the battery. This can cause arcing that may ignite battery gases causing explosions resulting in personal injury.

CAUTION: Keep batteries upright to prevent spillage. Electrolyte is a dilute sulphuric acid that is harmful to the skin and eyes.

CAUTION: Use tools with insulated handles to prevent the risk of electric shock.

6.11.2.2 Fire Hazard

WARNING: Make sure that batteries are charged in a well ventilated area, away from naked flames and sparks.

WARNING: Before disconnecting the battery, always remove power from the mains powered battery charger (where fitted).

CAUTION: During the charging of a battery, explosive gases are given off. Keep the battery well ventilated and away from naked flames and sparks. ***NO SMOKING.***

Before disconnecting a battery, always remove power from the mains powered battery charger (where fitted) ***BEFORE*** *disconnecting the charger leads.*

When putting a battery into service on a generator set, connect the earth lead ***LAST****; when removing the battery, disconnect the earth lead* ***FIRST****.*

6.11.2.3 Fluid Hazard

CAUTION: Take care when filling batteries with electrolyte and always wear personal protective equipment.

WARNING: Never add undiluted sulfuric acid to a battery.

WARNING: Always wear an acid-proof protective apron, goggles and gloves when handling electrolyte. If electrolyte is splashed on the skin or in the eyes, flush the affected areas immediately with water and seek medical advice.

6.11.3 Battery Commissioning

NOTE: Commissioning is to be undertaken by suitably trained and qualified service personnel only.

Lead-acid batteries supplied in dry-charged form are commissioned using the following steps:

- Pre-Commissioning Procedure
- Filling the Electrolyte
- Charging

- Fitting the Battery to the Generator Set

6.11.3.1 Pre-Commissioning Procedure

1. Check for any mechanical damage to the battery case or terminals, and make sure that the battery is clean and dry.
2. Smear the battery terminals with petroleum jelly to prevent corrosion.
3. Remove the vent plugs and break any seals (if present), taking care not to damage the plates or separators. The broken seal will fall into the bottom of the chamber and do no harm.

6.11.3.2 Filling the Battery with Electrolyte

1. Fill each cell of the battery with dilute sulphuric acid (electrolyte) of the correct specific gravity (SG) as shown in **Table 7 on page 75**, and according to the levels given in **Table 8 on page 76** (8.2 liters (2.2 gallons) per standard battery).
2. The filling operation must be completed in one operation.
3. Allow the battery to soak for ten to fifteen minutes. If the electrolyte level has fallen, it should be restored by adding electrolyte of the correct SG to the levels given in **Table 8 on page 76**.
4. After filling, the battery must be placed on a commissioning charge within one hour. Charging must take place before any load is placed on the battery.

CAUTION: Failure to give this commissioning charge may impair the charge capacity and life of the battery.

6.11.3.3 Charging - Commissioning

1. Charge the battery at the current rating given in **Table 8 on page 76** for a minimum of four hours in order to ensure that the acid is sufficiently mixed within the battery. The charging period may need to be extended if the battery has been in storage.
2. At the end of the charging process, the electrolyte levels must be checked and restored if necessary by the addition of electrolyte of the correct SG. The vent caps must then be replaced.

NOTE: Any further topping-up of the electrolyte must be made using distilled or de-ionized water.

3. When the generator set is running, check the charge alternator output using an induction ammeter.

6.11.3.4 Fitting the Battery to the Generator Set

1. A battery must not be fitted to a generator set without charge if the SG of the electrolyte has fallen below 1.240 during storage.
2. Battery hold-down bolts must be tight but not over tight.
3. Re-smear the terminals with petroleum jelly, if necessary.
4. Fit the vents firmly in position and ensure that the battery is clean and dry.
5. Verify correct polarity when connecting the battery to the set. Even momentary incorrect connection can cause damage to the electrical system. Connect the positive generator cable FIRST, followed by the negative ground.

6. Terminal connections must be tight but not over tight.

6.11.4 Battery Maintenance

NOTE: Maintenance-free batteries are sealed and do not require the addition of electrolyte. Some manufacturers of maintenance-free batteries provide an 'eye' or some visible means of telling when the battery is discharged or approaching the end of its useful life.

Batteries require attention at all times, even when not working. A battery will not last if it is neglected. Maintenance is carried out as follows:

1. Keep the battery, and the battery area, clean and dry. Ensure that the vent caps are securely screwed down, or pushed home.
2. To avoid contamination of the battery, only clean it when the vent plugs are in place.
3. Keep the battery terminals and connections free from corrosion by lightly coating them with petroleum jelly.
4. Check the condition of the starting batteries every month or after 100 hours use whichever occurs first.

WARNING: Thoroughly ventilate battery area before working on the battery. Ignition of explosive battery gases can cause severe personal injury. Do not smoke while servicing batteries, or cause sparks or arcing that may ignite battery gases

CAUTION: Always disconnect a battery charger from its AC source before disconnecting the battery leads. Failure to do so can result in voltage spikes high enough to damage the DC control circuits of the generator set

WARNING: To prevent dangerous arcing, always disconnect the negative (-) ground cable from the battery before working on any parts of the electrical system or the engine. Discharge static electricity from body before touching batteries, by first touching a grounded metal surface

6.11.4.1 Cleaning Batteries

WARNING: Electrolyte is a dilute sulfuric acid that is harmful to the skin and eyes. Do not get the substance in your eyes or contact with skin. Wear goggles, protective rubber gloves, and apron when servicing batteries.

WARNING: In case of skin contact, immediately wash affected area with soap and water.

In case of eye contact, immediately flood eyes with large amounts of water for a minimum of fifteen minutes. Immediately call a physician.

Prevent a build up of dirt or corrosion by wiping the batteries with a damp cloth. Use a solution consisting of 1/4 lb (0.11 kg) of baking soda added to 1 quart (0.96 liters) of water to neutralize any possible acid. Be sure the vent plugs are tight to prevent any cleaning solution from entering the cells.

After cleaning, make sure the battery and surrounding areas are dry.

After making connections, coat the terminals with a light application of petroleum jelly to retard corrosion. Keep the battery terminals clean and tight. A loose connection can reduce battery standby time and cause battery fires.

6.11.4.2 Charging

Where generator sets are used infrequently, battery re-charging must take place when the SG drops below 1.220 (or 1.180 in tropical climates) until the SG in all cells rises and remains constant for three hours. In all cases where use is infrequent, batteries must be put on a monthly re-charge schedule to ensure that a fully charged condition is maintained.

CAUTION: NEVER allow a battery to become completely flat (fully discharged), or to stand in a discharged condition, or damage will result.

1. Remove the vent caps before carrying out charging.
2. Do not put a filled battery into storage without first giving the battery a commissioning charge.
3. Batteries must be given a further charge every six months at the normal initial charge rate until the voltage and SG cease to rise.
4. At the end of the charging process, the electrolyte levels must be checked and restored, if necessary, by the addition of electrolyte of the correct SG. The vent caps must then be replaced.

NOTE: Any further topping-up of the electrolyte must be made using distilled or de-ionized water.

6.11.4.3 Trickle / Boost Charging (Option)

The battery will automatically receive a 'trickle-charge' to prevent the battery becoming discharged below its optimum charge level by the battery charger (when switched ON).

During trickle-charging, not all cells in the battery receive the same charge; over a period of several months this may affect battery performance. It is therefore good practice to give batteries a regular charge at their full rate to return all cells to full capacity. This is referred to as boost-charging, or equalize-charging.

If the charger is fitted with a Boost Charge switch, the Boost position should be selected at intervals detailed by the battery manufacturer (normally around every six months).

CAUTION: Batteries should not be left on Boost Charge for extended periods as this will result in excessive water consumption, gassing, and may impair battery performance.

A Boost Charge not exceeding twice the bench charge rate may be used, providing that:

- The electrolyte temperature does not exceed 109 °F (43 °C).
- The battery volts do not reach 15 V (for a 12 V battery)

If either of these situations should arise, reduce the charge rate to the normal bench rate. For tropical climates the temperature must not exceed 120 °F (49 °C).

NOTE: The charge period should be extended:

- **To eight hours if the battery has been in storage for three months or more, at temperatures in excess of 86 °F (30 °C), or if humidity is above 80%.**
- **To twelve hours if the battery has been in storage for twelve months or more.**

At the end of the charging process, the electrolyte levels must be checked and restored if necessary by the addition of electrolyte of the correct SG. The vent caps must then be replaced.

NOTE: **Any further topping-up of the electrolyte must be made using distilled or de-ionized water.**

6.11.5 Electrolyte - Specific Gravity and Temperature

Maintenance-free batteries are sealed and do not require the addition of electrolyte. Some manufacturers of maintenance-free batteries provide an 'eye' or some visible means of telling when the battery is discharged or approaching the end of its useful life.

6.11.5.1 Checking Electrolyte Level

CAUTION: Never add tap or well water and never allow the battery electrolyte to drop below the top of the plates otherwise damage will occur.

CAUTION: Do not add water in freezing weather unless the engine will run long enough (two to three hours) to assure a thorough mixing of water and electrolyte.

Check the level of the electrolyte (acid and water solution) in the batteries at least every month or 100 hours of operation, whichever occurs first. Maintain the electrolyte to the levels indicated in **Table 8 on page 76** by the addition of distilled water only and recharge. Replace the vent plugs once filling is completed.

If the cell is low, check case for leaks.

Keep the battery case clean and dry. An accumulation of moisture will lead to a more rapid discharge and battery failure.

6.11.5.2 Checking Specific Gravity Using a Hydrometer

Use a hydrometer to check the specific gravity (SG) of the electrolyte in each battery cell.

Hold the hydrometer vertical and take the reading.

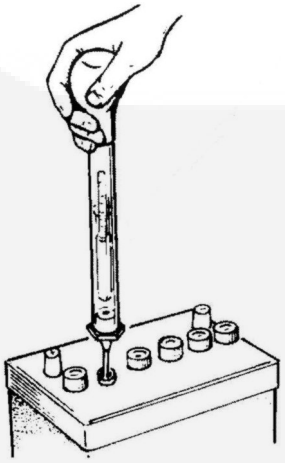

FIGURE 35. CHECKING SPECIFIC GRAVITY

6.11.5.3 Checking Specific Gravity Using a Refractometer

Follow the instructions included with the refractometer. Obtain a small drop of liquid and place it under the clear plastic cover to check the specific gravity (SG) of the electrolyte in each battery cell.

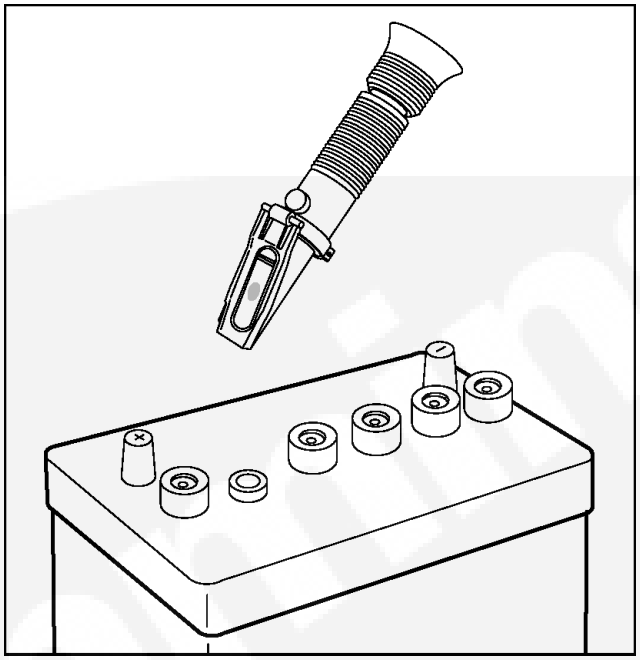

FIGURE 36. TYPICAL BATTERY ACID REFRACTOMETER

6.11.5.4 Specific Gravity Values for Batteries

A fully charged battery will have a corrected specific gravity of 1.260 at 77 ºF (25 ºC). Charge the battery if the reading is below 1.215.

Hold the hydrometer vertical and take the reading. A fully charged battery will have a corrected specific gravity of 1.260 at 77 ºF (25 ºC). Charge the battery if the reading is below 1.215.

TABLE 7. SPECIFIC GRAVITY

SPECIFIC GRAVITY		
TEMPERATURE	For Filling New Cells	At end of Charge
Ambient temperature normally below 32 °C	1.270	1.270 – 1.290
Ambient Temperature frequently above 32 °C	1.240	1.240 – 1.260
Maximum permissible temperature of electrolyte during charge	113 °F (45 °C)	113 °F (45 °C)

Table 7 on page 75 shows the specific gravity (SG) of electrolyte, corrected to 77 ºF (25 ºC). Correct the SG reading for other temperatures by subtracting seven gravity points (0.007) for every 18 ºF (10 ºC) the electrolyte temperature is above 80 ºF (27 ºC). Apply the correction formula as follows:

1. For every 18 ºF (10 ºC) above 77 ºF (25 ºC), subtract 0.007 (7 points)
2. For every 18 ºF (10 ºC) below 77 ºF (25 ºC), add 0.007 (7 points)

For example: if the specific gravity at 77 ºF (25 ºC) is 1.260, then the specific gravity at 59 ºF (15 ºC) is 1.267.

6.11.6 Battery Replacement

Always replace the starting battery with the same number and type (e.g. vented, lead acid). Properly dispose of battery in accordance with local environment agency requirements.

WARNING: Do not mutilate or burn the battery in a fire for disposal. Burning the battery may cause an explosions which can result in severe personal injury or death. Damage to the case will release electrolyte which is harmful to the skin and eyes and is also toxic.

6.11.7 Electrolyte Levels and Bench Charging Rates

The following table shows the electrolyte level expected at a range of bench charging rates.

TABLE 8. ELECTROLYTE LEVELS

Battery Type	Electrolyte Level Above Plates (mm)	Bench Charging Rate (A/hour)		Battery Type	Electrolyte Level Above Plates (mm)	Bench Charging Rate (A/hour)
1	8	3		325	8	20
7	8	3.5		327	8	11
15	8	4		328	8	20
16	8	4		329	8	20
17	8	9		332	8	25
35	8	3.5		333	8	11
36	8	3.5		386	8	6
37	8	4		404	8	7
38	8	4		414	8	20
46	8	6		415	8	20
47	8	3		471	8	15
48	8	4		484	8	25
49	8	4		501	8	9
63	8	4		511	8	10
65	8	5		521	8	12
67	8	7		531	8	13
68	8	7		541	8	15
69	8	7		543	8	15
70	8	7		591	8	14
71	8	6		602	8	8
72	8	8		612	8	9
73	8	6		635	16	12
74	8	7		643	16	9
75	8	7		644	16	12
77	8	4		645	16	9
78	12	5		646	16	8

83	8	3.5		647	16	12
84	8	4		648	16	12
85	8	5		649	16	9
90	12	7		655	16	12
91	8	6		656	16	12
92	12	5		663	16	9
93	8	6		664	16	9
97	8	6		665	16	9
154	4	3.5		678	8	6
175	8	7		679	16	9
191	6	6		701	8	16
221	8	8		702	8	20
222	8	12		703	8	25
279	8	6		711	8	16
312	8	14		712	8	20
313	8	14		713	8	25
315	8	14		721	8	15
319	8	14		722	8	20
320	8	14		732	8	15
321	8	14		733	8	20
322	8	14		769	8	45
324	8	20				

NOTE: **If not listed in the above table use the bench rate given in the catalog, or charge at a current equal to 10% of the nominal capacity at the twenty hour rate (Amperes/hour), or 5% of the reserve capacity in minutes.**

NOTE: **Batteries of the 800 series should be prepared in accordance with the instructions supplied with each battery.**

6.11.8 Battery Fault Finding

The following table shows some typical faults, their possible causes and remedies.

TABLE 9. FAULT FINDING

Symptom	Possible Fault	Remedy

Battery completely discharged	Poor battery terminal connection	Clean connections, replace and tighten
	Charge alternator / alternator connection fault	Contact your nearest Cummins Power Generation distributor
	Mains battery charger / charger connections fault / mains supply fault	Check battery charger, charger mains supply and charger connections
	Blown fuse	Replace fuse
	Battery fault	Remove and check using specialist equipment
	Newly installed battery shipped dry	Fill with electrolyte and give commissioning charge
Battery low charge	Poor battery connection	Clean connections, reconnect and tighten securely
	Charge alternator / alternator connection fault	Contact your nearest Cummins Power Generation distributor
	Mains battery charger / charger connections fault	Check battery charger and charger connections
	Inequality in cell charge	Boost (equalize) charge required; when complete, recheck voltage and specific gravity
	Battery fault	Remove and check using specialist equipment
Battery overcharged	Charge alternator fault	Contact your nearest Cummins Power Generation distributor
	Mains battery charge fault	Check mains battery charger
	Low battery fluid level	Check the charger; it may not be shutting off when the charge is complete.
Battery terminals getting hot	Poor battery connection	Clean connections, reconnect and tighten securely
		Check charging mechanism, auto shut-off

7 Troubleshooting

Fault code information, together with Warning and Shutdown information, is provided in this section to assist in locating and identifying the possible causes of faults in the generator set system. Refer also to the Operator's engine specific manual. This latter manual contains additional information regarding the running and care of the generator set and also specific equipment instructions that may differ from the standard generator set.

7.1 Control System

The generator set control system continuously monitors engine sensors for abnormal conditions, such as low oil pressure and high coolant temperature. If any of these conditions occur, the control will light a yellow Warning lamp or a red Shutdown lamp and will display a message on the graphical display panel. In the event of an engine shutdown fault (red Shutdown LED), the control will stop the engine immediately.

7.2 Safety Considerations

All maintenance tasks must be assessed for health and safety risks, the preventative measures identified must be actioned. Accompaniment is required for tasks where the presence of someone else will add significantly to the safety of the task.

The installation of a generator set can be designed for remote starting. When troubleshooting a generator set that is shut down, make sure that the generator set cannot be accidentally re-started. Refer to **Section 6.1 on page 56**.

WARNING: High voltages are present when the generator set is running. Do not open the output box while the generator set is running.

WARNING: Some panel internal components may have live exposed terminations even if the generator set is not running. Isolate all external electrical supplies prior to access of the control panel.

WARNING: Contacting high voltage components can cause severe personal injury or death by electrocution. Keep the output box covers in place during troubleshooting. Only personnel trained and experienced in performing electrical servicing should carry out testing and/or adjustments.

CAUTION: Always disconnect a battery charger from its AC source before disconnecting the battery cables. Failure to do so can result in voltage spikes high enough to damage the DC control circuits of the generator set.

WARNING: Ventilate the battery area before working on or near the battery. Wear goggles. Stop the generator set and disconnect the battery charger before disconnecting the battery cables. Disconnect the negative (–) cable first and reconnect it last.

WARNING: Ignition of explosive battery gases can cause severe personal injury or death. Arcing at battery terminals, light switch or other equipment, flame, pilot lights and sparks, can ignite battery gas. Do not smoke, or switch inspection light on or off near battery. Discharge static electricity from body before touching batteries by first touching a grounded metal surface.

WARNING: Accidental starting of the generator set while working on it can cause severe personal injury or death. Prevent accidental starting by disconnecting the starting battery cables (negative (–) first).

7.3 Fault Finding

Should a fault condition occur during operation, follow the procedures in the following tables to locate and correct the problem. For any symptom not listed, contact your authorized distributor for assistance.

Before starting any fault finding, ensure that the following basic checks are carried out:

- All switches and controls are in their correct positions
- The fuel oil level is correct
- The lubricating oil level is correct
- The coolant level is correct
- The radiator matrix is free from obstruction
- The battery charge condition is satisfactory and the connections are secure
- The generator set electrics and alternator connections are secure
- The panel connections are secure
- The protection circuits have been reset
- Blown fuses have been replaced
- Tripped contactors or circuit breakers have been reset

WARNING: Many troubleshooting procedures present hazards that can result in severe personal injury or death. Only qualified service personnel with knowledge of fuels, electricity, and machinery hazards should perform service procedures.

Review safety precautions listed within Chapter 1 on page 1 of this manual together with the documentation supplied with the generator set.

7.4 Status Indicators - PCC 2100

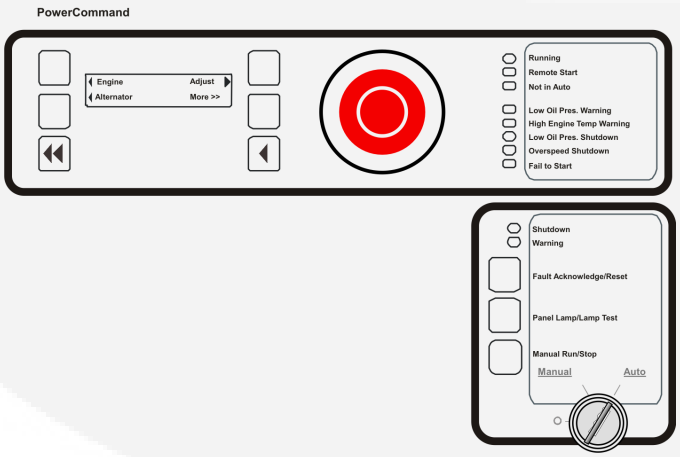

7.4.1 Running Indicator

This green lamp is lit whenever the generator (local or remote) is running.

7.4.2 Remote Start Indicator

This green lamp indicates the control is receiving a remote run signal. When flashing, it indicates a load demand stop mode.

7.4.3 Not in Auto

This red lamp flashes continuously when the O/Manual/Auto switch is not in the Auto position.

NOTE: **If the switch is in the Auto position and the lamp is still flashing, service is required.**

7.4.4 Configurable Indicators

The following configurable indicators (default values shown) can be changed with the InPower service tool. The configurable items are: change generator event and LED color (green, yellow or red), and enable/disable indicator.

The InPower service tool is required to select the desired settings. Contact an authorized service center for assistance.

7.4.5 Shutdown Status

This red lamp is lit when the control detects a Shutdown condition. The generator set cannot be started when this lamp is on. After the condition has been corrected, the lamp can be reset by turning the O/Manual/Auto switch to the O position, and pressing the Fault Acknowledge button. The generator set cannot be started when this lamp is on.

Dependent upon the specific fault that occurs, the engine may or may not shut down immediately. A fault that could cause engine damage, causes an immediate engine shutdown (bypasses engine cooldown sequence). All other faults would allow the engine to run during the cooldown sequence before engine shutdown. In this case, the Shutdown Status indicator blinks during the cooldown period.

7.4.6 Warning Status Indicator

This yellow lamp is lit whenever the control detects a warning condition. After the condition is corrected, warning indicators can be reset by pressing the Fault Acknowledge button. (It is **not** necessary to stop the generator set if the fault becomes inactive during generator set operation.) In auto mode, warning indicators can also be reset by cycling the remote reset input after the condition is corrected.

Some warnings remain active after the condition is corrected and the control reset button is pressed. This will require the generator set to be shut down to reset the warning indicator.

7.5 Fault/Status Codes - PCC 2100

7.5.1 Fault/Status Codes

WARNING: ***Many troubleshooting procedures present hazards that can result in severe personal injury or death. Only trained and experienced service personnel with knowledge of fuels, electricity, and machinery hazards should perform service procedures.***

Accidental starting of the generator set while working on it can cause severe personal injury or death. Prevent accidental starting by disconnecting the starting battery leads (negative [–] first).

The fault codes have been divided into five categories to help you determine what corrective action to take for safe operation of the generator set. Use the Fault Codes table to find the category (CTG) and fault description for all codes.

NOTE: Gaps in the code numbers are for codes that do not apply to this generator set. Some of the codes listed are feature dependent and will not be displayed by this control.

7.5.2 Fault Messages

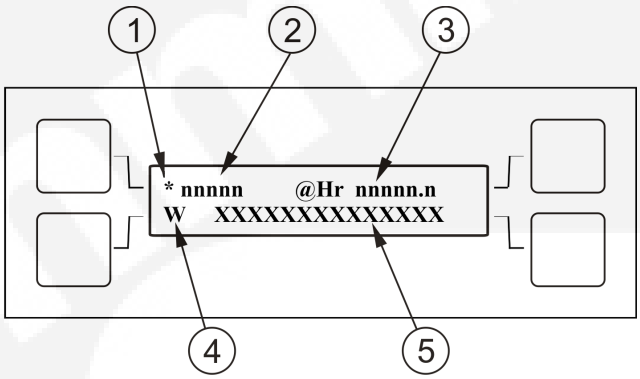

NO.	Description
1	Asterisk indicates Active Fault
2	Fault Code
3	Hour Fault Occurred
4	W = Warning, S = Shutdown
5	Fault Description

FIGURE 37. FAULT MESSAGE DISPLAY SCREEN

A Fault message is an indicator of a Warning or Shutdown condition. It includes the fault number, and a short description. It also includes where the fault occurred if the generator set control did not detect the fault and is simply reporting the fault. **Faults/Status Codes on page 81** provides a list of the fault codes, types, and message displayed.

Active and acknowledged faults may be viewed in the Faults menu.

7.5.3 Fault Acknowledgement

Shutdown faults must be acknowledged after the fault has been corrected. If in Auto or Manual mode, the control must be set to Stop mode (Off). Faults are cleared from the control panel display by pressing the Reset button.

Faults are re-announced if they are detected again after being acknowledged. Refer to **Fault Acknowledgement/Reset Button on page 82**.

NOTE: Faults may also be acknowledged when in Auto mode and the Remote Start command is removed. Contact you authorized distributor for this option.

7.5.4 Category A Fault Codes

This category pertains to engine or alternator shutdown faults that require immediate repair by trained and experienced service personnel (generator set non-operational). The control prevents the generator set from being re-started if a shutdown fault has not been corrected.

7.5.5 Category B Fault Codes

This category consists of faults that can affect generator set performance or can cause engine, alternator, or connected equipment damage. Operate the generator set only when it is powering critical loads and cannot be shut down. These faults require repair by trained and experienced service personnel.

7.5.6 Category C Fault Codes

This category consists of faults that do not affect generator set performance, but require repair by trained and experienced service personnel. These codes indicate a defective harness or wiring problem.

These codes can also indicate a defective engine sensor, leaving no engine protection. (Without this protection, engine damage can occur without detection).

CAUTION: Continued operation may void the generator set warranty if damage occurs that relates to this type of fault condition.

7.5.7 Category D Fault Codes

This category consists of faults that are repairable by site personnel. Service will be required by trained and experienced service personnel if site personnel cannot resolve the problem after taking the corrective actions suggested in the *Customer Input Faults* section of this chapter.

7.5.8 Category E Fault Codes

This category indicates non-critical operational status of the generator set, external faults, or customer fault inputs. These faults require repair by trained and experienced service personnel.

7.5.9 PCC 2100 Fault Codes Table

TABLE 10. FAULT CODES TABLE FOR PCC 2100

CTG	CODE	LAMP	DISPLAYED
A	121	Shtdn	Speed Signal Lost
C	135	Wrng	Oil Pressure Sensor H
C	141	Wrng	Oil Pressure Sensor L
D	143	Wrng	Pre-Low Oil Pres
C	144	Wrng	Coolant Sensor High
C	145	Wrng	Coolant Sensor Low
D	146	Wrng	Pre-High Coolant Temp
D	151	Shtdn	High Coolant Temp
D	197	Wrng	Low Coolant Level

CTG	CODE	LAMP	DISPLAYED
A	234	Shtdn	Overspeed
D	235	Shtdn	Low Coolant Leve
D	359	Shtdn	Fail To Start
D	415	Shtdn	Low Oil Pressure
D	441	Wrng	Low Bat Voltage
D	442	Wrng	High Bat Voltage
A	1123	Shtdn	Shutdown After BS
E	1124	Wrng	Delayed Shutdown
E	1131	Wrng	Battle Sh Active
E	1311	Shtdn/Wrng	Customer Input #1
E	1312	Shtdn/Wrng	Customer Input #2
E	1313-1316	Shtdn/Wrng	Network Fault 1 through 4
E	1317	Shtdn/Wrng	Customer Input #3
B	1318	Wrng	Customer Input #4
A	1334	Shtdn	Crit Scaler OR
B	1335	Wrng	Noncrit Scaler OR
C	1416	Wrng	Failt to Shutdown
D	1417	Wrng	Pwr Down Error
D	1433	Shtdn	Emergency Stop
D	1434	Shtdn	Remote E-stop
D	1435	Wrng	Low Coolant Temp
D	1438	Shtdn	Fail to Crank
D	1442	Wrng	Weak Battery
D	1443	Shtdn	Battery Failed
B	1444	Wrng	kW Overload
A	1445	Shtdn	Short Circuit
A	1446	Shtdn	High AC Voltage
A	1447	Shtdn	Low AC Voltage
D	1448	Shtdn	Under Frequency
A	1449	Wrng	Over Frequency
A	1452	Wrng	Gen CB Not Close
A	1453	Wrng	Gen CB Not Open
A	1459	Shtdn	Reverse Power
A	1461	Shtdn	Loss of Field
C	1466	Wrng	Modem Failure
C	1468	Wrng	Network Error
A	1469	Shtdn	Speed/Hz Match
B	1477	Wrng	Over Current

CTG	CODE	LAMP	DISPLAYED
A	1472	Shtdn	Over Current
E	2323-2326	Shtdn/Wrng	Network Fault 5 through 8
B	2327	Wrng	PTC Fault
E	2329	Wrng	Low S1 Frequency
E	2331	Wrng	Low S1 Voltage
A	2335	Shtdn	Excitation Fault
A	2336	Shtdn	Memory Error
C	2337	Wrng	Pwr Tran Disabled
C	2338	Wrng	Pwr Tran Failure
E	2339	Wrng	Pwr Down Enabled
B	2341	Wrng	High Control Temp
E	2342	Wrng	Too Long in Idle (10 min)
E	2358	Wrng	High S1 Voltage
E	2396	Wrng	S1 CB Not Close
E	2397	Wrng	S1 CB Not Open
C	2966	Wrng	PTC Timeout
C	2967	Wrng	Governor Fault
C	2968	Wrng	AVR Fault
C	2969	Wrng	LON Failure
A	2972	Shtdn	Field Overload

7.5.10 Warning and Shutdown Codes

WARNING: Many troubleshooting procedures present hazards which can result in severe personal injury or death. Only trained and experienced service personnel with knowledge of fuels, electricity, and mechanical hazards should perform service procedures. Review safety precautions.

7.5.10.1 Code 143 - Pre-Low Oil Pres

Corrective Action: Indicates the engine oil pressure has dropped to an unacceptable level. If the generator is powering critical loads and cannot be shut down, wait until the next shutdown period and then follow code **415** procedure.

7.5.10.2 Code 146 - Pre-High Cool Tmp

Corrective Action: Indicates the engine has begun to overheat (coolant temperature has risen to an unacceptable level). If the generator is powering non-critical and critical loads and cannot be shut down, use the following:

1. Reduce the load if possible by turning off non-critical loads.
2. Check air inlets and outlets and remove any obstructions to airflow.

If engine can be stopped, follow code **151** procedure.

7.5.10.3 Code 151 - High Coolant Temp Alarm

Corrective Action: Indicates the engine has overheated (coolant temperature has risen above the shutdown trip point). Allow the engine to cool down completely before proceeding with the following checks:

1. Check the coolant level and replenish if low. Look for coolant leaks and repair if necessary.
2. Check for obstructions to cooling airflow and correct as necessary.
3. Check fan belt and repair or tighten if necessary.
4. Check the blower fan and circulation pumps on remote radiator installations.
5. Reset the control and restart after locating and correcting the problem.

7.5.10.4 Code 197 - Low Coolant Level

Corrective Action: Indicates engine coolant level has fallen to an unacceptable level. If the generator is powering critical loads and cannot be shut down, wait until the next shutdown period, and then follow **235 Coolant Level Alarm** procedure. If the engine can be stopped, follow **235** procedure.

7.5.10.5 Code 235 - Low Coolant Level

Corrective Action: Indicates engine coolant level has fallen below the alarm trip point. Allow the engine to cool down completely before proceeding.

1. Check the coolant level sight glass at LTA top tank. Replenish if low.
2. Look for possible coolant leakage points and repair if necessary.
3. Reset the control and restart after locating and correcting the problem.

7.5.10.6 Code 359 - Fail To Start

Corrective Action: Indicates a possible fuel system problem. (Engine cranks but fails to start)

1. Open any closed fuel shutoff valve.
2. Check for dirty or plugged air filter and replace if necessary (see Maintenance section).
3. Fuel delivery to the set is inadequate. Contact an authorized service center for service.
4. Reset the control and restart after correcting the problem.

7.5.10.7 Code 415 - Low Oil Pressure

Corrective Action: Indicates engine oil pressure has dropped below the shutdown trip point. Check oil level, lines and filters. If the oil system is OK but oil level is low, replenish. Reset the control and restart.

7.5.10.8 Code 441 - Low Bat Voltage

Corrective Action: Indicates battery voltage supply to the control is approaching a low level at which unpredictable operation will occur.

1. Discharged or defective battery. Check the battery charger fuse. Recharge or replace the battery.
2. Poor battery cable connections. Clean the battery cable terminals and tighten all connections.

3. Check battery charge voltage float level if applicable (raise float level).

.

7.5.10.9 Code 442 - High Bat Voltage

Corrective Action: Indicates battery voltage supply to the control is approaching a high level at which damage to the control can occur. Check the float level on the battery charger if applicable (lower float level).

7.5.10.10 Code 1311, 1312, 1317, 1318 - Customer Input #1-#4

Corrective Action: The nature of the fault is an optional customer selection. Example inputs: Low Fuel Day Tank, Water In Fuel, Ground Fault, Low Starting Hydraulic Pressure, Low Starting Air Pressure, etc.

Each of the fault functions can be programmed (using the InPower service tool), as follows:

- Enable/disable input (Default: enable)
- Status, Warning, or Shutdown (Default: #1-None, #2 and #3-Warning)
- Active closed or open (Default: closed [ground])
- Change the display name using up to 19 characters (Default: #1- Customer Fault 1, #2-Ground Fault, #3-Low Fuel)

7.5.10.11 Code 1417 - Power Down Error

Corrective Action: Indicates that the control can not power down due to some unknown condition. Possible drain on battery. Contact an authorized service center for service.

7.5.10.12 Code 1433 - Emergency Stop

Corrective Action: Indicates local Emergency Stop. To reset the local/remote Emergency Stop button:

1. Pull the button out.
2. Move the O/Manual/Auto switch to O.
3. Press the front panel Fault Acknowledge/Reset button.
4. Select Manual or Auto, as required.

7.5.10.13 Code 1434 - Remote E-Stop

Corrective Action: Indicates remote Emergency Stop. See code 1433 to reset.

7.5.10.14 Code 1435 - Low Coolant Temp

Generator set is not operating. This warning occurs when the engine coolant temperature is 70° F (21° C) or lower.

☞ **NOTE: In applications where the ambient temperature falls below 40° F (4° C), Low Coolant Temp may be indicated even though the coolant heaters are operating.**

Corrective Action: Indicates engine coolant heater is not operating or is not circulating coolant. Check for the following conditions:

1. Coolant heater not connected to power supply. Check for blown fuse or disconnected heater cord and correct as required.

2. Check for low coolant level and replenish if required. Look for possible coolant leakage points and repair as required.

7.5.10.15 Code 1438 - Fail To Crank

Indicates possible fault with control, speed sensing or starting system. See code **441** for corrective action.

7.5.10.16 Code 1442 - Weak Battery

Correctice Action: Indicates that during cranking, the battery voltage is at or below the weak battery warning trip point for a time greater than or equal to the weak battery set time. See code **441** for corrective action.

7.5.10.17 Code 1443 - Battery Failed

Corrective Action: Dead battery - engine will not start. See code **441** for corrective action.

7.5.10.18 Code 1448 - Under Frequency

Corrective Action: Indicates possible fuel system problem or overload condition.

1. Check for dirty or plugged air filter and replace if necessary (see Maintenance section).
2. Check operation by disconnecting load and restarting generator set.
3. Fuel system requires adjustment. Contact an authorized service center for service.
4. Fuel delivery to the set is inadequate. Contact an authorized service center for service.
5. Reset the control and restart after correcting the problem.

7.5.10.19 Code 2342 - Too Long in Idle

Corrective Action: Indicates the generator set has been in Idle mode too long (10 minutes maximum).

7.6 Line Circuit Breaker

A line circuit breaker is mounted in the generator output box. If the load exceeds the circuit breaker current rating, the line circuit breaker will open, preventing the generator from being overloaded. If the circuit breaker trips, locate the source of the overload and correct as necessary. Manually reset the breaker to reconnect the load to the generator.

8 Battery Charger

8.1 Battery Charger - 15 Amp @ 12 Volt and 12 Amp @ 24 Volt

There are two types of 15/12-amp PowerCommand battery chargers (see **Figure 38 on page 90**). All 15/12-amp battery chargers have a 20 amp DC circuit breaker switch on the front of the battery charger. The 120, 208, and 240 VAC battery chargers include two 10 amp AC circuit breaker switches, while the 277, 380, 416, 480, and 600 VAC battery chargers include two AC fuse holders.

Refer to the battery charger owner's manual for more information.

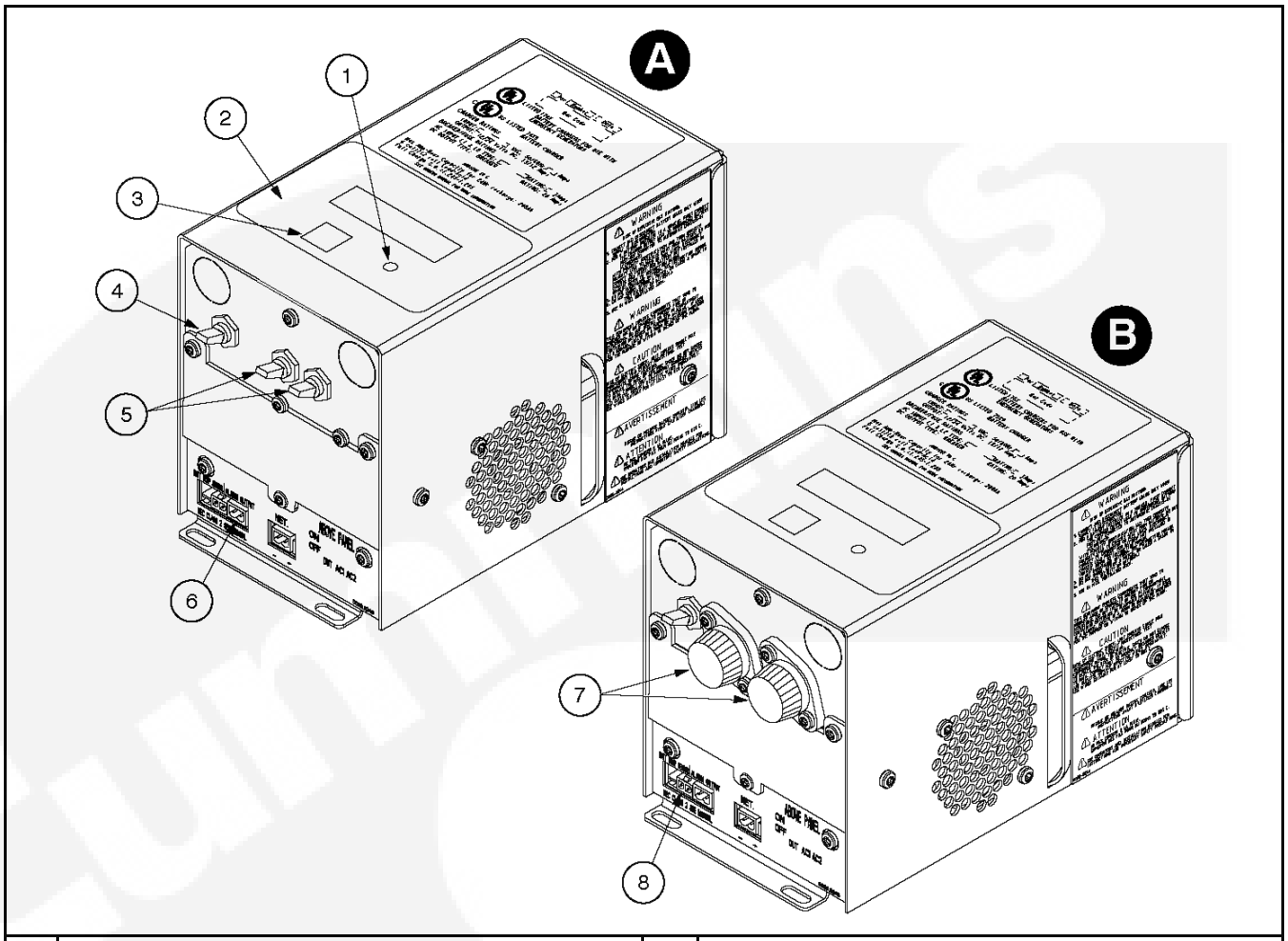

A	120, 208, and 240 VAC Battery Charger	4	20 Amp DC Circuit Breaker Switch (Shown in the "On" position)
B	277, 380, 416, 480, and 600 VAC Battery Charger	5	10 Amp AC Circuit Breaker Switches (Shown in the "On" position)
1	Status LED	6	Fault Alarm Output Connector
2	Control Panel	7	10 Amp AC Fuse Holders
3	Reset Button	8	Connector for Optional Battery Temperature Sensor

FIGURE 38. 15/12-AMP POWERCOMMAND BATTERY CHARGERS

8.1.1 Control Panel

The 15/12-amp charger control panel includes a digital display, a Reset button, and an LED status indicator.

- The 2-line x 16-character digital display displays menus and faults.
- The Reset button is used to select menu options and to clear fault messages.
- The status LED displays the appropriate color for the following conditions.
  - **Green** - On solid indicates unit is charging.
  - **Amber** - On solid indicates equalizing.

- **Red** - On solid indicate a fault condition. The fault number is shown on the digital display.

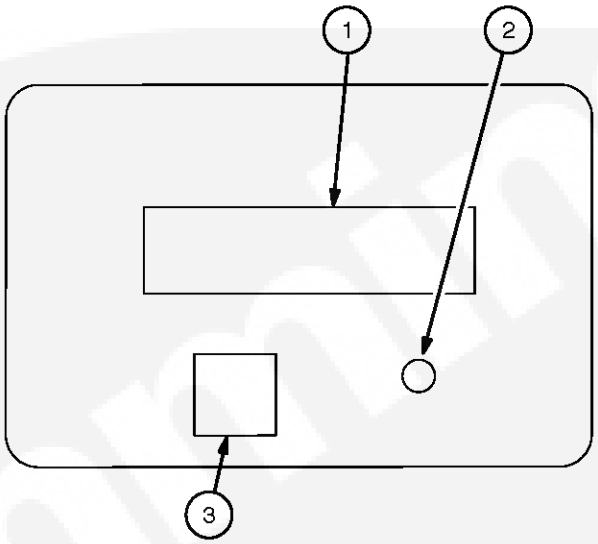

No.	Description	No.	Description
1	Digital Display	3	Reset Button
2	LED/Status Indicator		

FIGURE 39. CONTROL PANEL

8.1.2 Battery Charger Configuration

The **RESET** button on the control panel is used to configure the battery charger. More information on the Setup menus is included in the Battery Charger Operator Manual (901-0107).

- **Battery Voltage and Type** - The battery charger must be correctly configured, using the Setup menus, for the correct battery voltage and type before it is connected to the battery. The battery voltage can be set for 12 or 24 VDC (default = 12 VDC). The battery type can be set for Lead-Acid, Gel, or AGM batteries (default = Lead-Acid).

☞ **NOTE: A factory installed battery charger is set up for the proper DC battery voltage requested on the production order, with the Lead-Acid battery type selected as the default.**

- **Float Voltage** - Various float voltages can be configured using the Setup menus. Consult your battery datasheet for the best possible choice.
- **Battery Equalization** - Battery equalization is available for Lead-Acid batteries that are completely charged, using the Equalize Battery screen in the Setup menus. When battery equalization is in process, the LED status indicator turns amber.

8.1.3 Battery Temperature Sensor

A connector for the battery temperature sensor option is located on the front on the battery charger. When used to monitor battery temperature, this sensor is connected from the battery charger to the positive terminal of the battery. A fault message (fault code 2263) is displayed if the battery temperature is too high (reaches 131 degrees F [55 degrees C]).

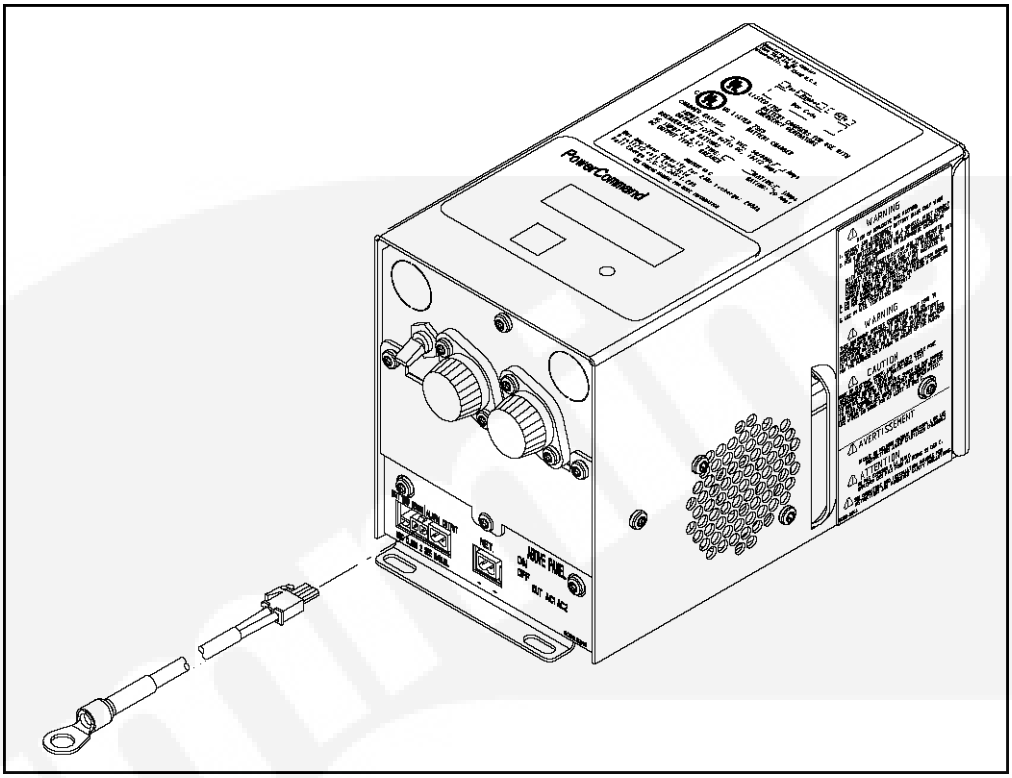

FIGURE 40. TEMPERATURE SENSOR

8.2 Circuits

For generator set specific information, refer to the drawings and circuit diagrams provided with your generator set.

9 Manufacturing Facilities

NORTH AMERICA	EMEA, CIS	ASIA PACIFIC
Cummins Power Generation Limited 1400 73rd Ave. NE Minneapolis, MN 55432 USA	Cummins Power Generation Limited Columbus Avenue Manston Park Manston, Ramsgate Kent CT12 5BF United Kingdom	Cummins Power Generation Limited 10 Toh Guan Road #07-01 TT International Tradepark Singapore 608838
Phone +1 763 574 5000 Toll Free +1 800 888 6626 Fax +1 763 574 5298	Phone +44 1843 255000 Fax +44 1843 255902	Phone +65 6417 2388 Fax +65 6417 2399
BRAZIL	**CHINA**	**INDIA**
Rua Jati, 310, Cumbica Guarulhos, SP 07180-900 Brazil	Cummins Power Generation 2 Rongchang East Street, Beijing Economic – Technological Development Area Beijing 100176, P.R.China	35A/1/2, Erandawana Pune 411 038 India
Phone +55 11 2186 4195 Fax +55 11 2186 4729	Phone +86 10 5902 3000 Fax +86 10 5902 3199	Phone +91 020 6602 7525 Fax +91 020 6602 8090
LATIN AMERICA	**MEXICO**	
3350 Southwest 148th Ave. Suite 205 Miramar, FL 33027 USA	Eje 122 No. 200 Zona Industrial San Luis Potosi, S.L.P. 78395 Mexico	
Phone +1 954 431 551 Fax +1 954 433 5797	Phone +52 444 870 6700 Fax +52 444 824 0082	

9.1 How to Obtain Service

When a product requires servicing, contact your nearest Cummins Power Generation distributor. To locate your local Cummins Power Generation distributor, refer to **www.cumminspower.com** and select Distributor Locator. When contacting your distributor, always supply the complete Model, Specification, and Serial Number as shown on the nameplate.

9.1.1 Locating Your Distributor

In North America

Telephone +1-800-888-6626 (this is an automated service for touch-tone phones only) to contact the nearest Cummins Power Generation distributor in the United States or Canada. By selecting Option 1 (press 1), you will be automatically connected to the distributor nearest you.

If you are unable to contact a distributor using the automated service, consult the Yellow Pages. Typically, our distributors are listed under:

GENERATORS – ELECTRIC or

ENGINES – GASOLINE OR DIESEL

If you have difficulty arranging service or resolving an issue, please contact the Service Manager at the nearest Cummins Power Generation distributor for assistance.

When contacting your distributor, always supply the complete Model, Specification, and Serial Number as shown on the product nameplate.

Outside North America

If you are outside North America, telephone Cummins Power Generation at +1-763-574-5000 from 7:30 am to 4:00 pm, Central Standard Time, Monday through Friday, or fax +1-763-528-7229.

cummins

Copyright © 2011 Cummins Power Generation, Inc. All rights reserved.
Cummins, the "C" logo, and "Our energy working for you." are trademarks of Cummins Inc.