GOLD'S GYM®

STRIDE TRAINER 350i

www.workoutwarehouse.com

USER'S MANUAL

Model No. GGEL62915.1
Serial No. _____

Write the serial number in the space above for reference.

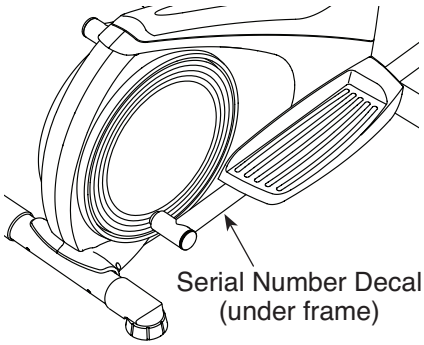

ACTIVATE YOUR WARRANTY

To register your product and activate your warranty today, go to www.workoutwarehouse.com/registration.

CUSTOMER CARE

For service at any time, go to www.workoutwarehouse.com.

Or call 1-877-776-4777
Mon.–Fri. 6 a.m.–6 p.m. MT
Sat. 8 a.m.–12 p.m. MT

Please do not contact the store.

⚠ CAUTION

Read all precautions and instructions in this manual before using this equipment. Keep this manual for future reference.

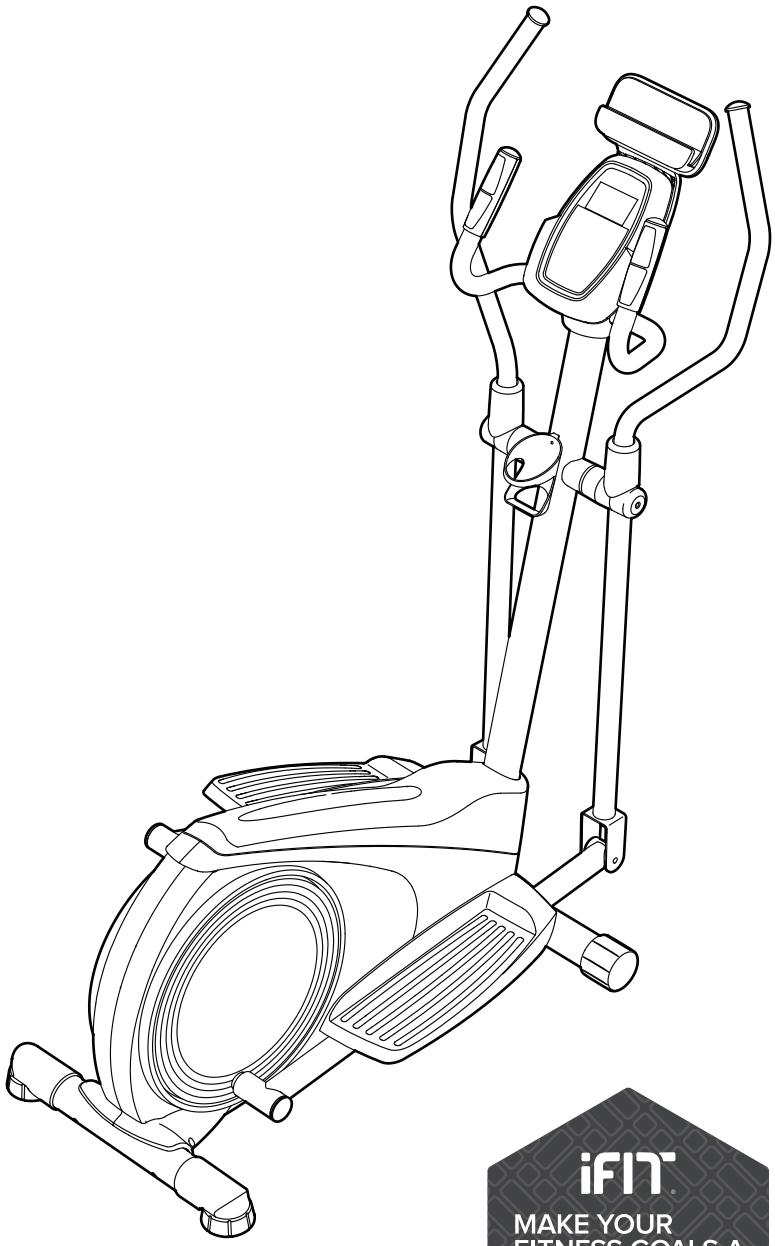

iFIT
MAKE YOUR FITNESS GOALS A REALITY
IFIT.COM

TABLE OF CONTENTS

WARNING DECAL PLACEMENT 2
IMPORTANT PRECAUTIONS 3
BEFORE YOU BEGIN 5
PART IDENTIFICATION CHART 6
ASSEMBLY 7
HOW TO USE THE ELLIPTICAL 16
FCC INFORMATION 23
MAINTENANCE AND TROUBLESHOOTING 24
EXERCISE GUIDELINES 26
PART LIST 29
EXPLODED DRAWING 30
ORDERING REPLACEMENT PARTS . . . . . Back Cover
LIMITED WARRANTY . . . . . Back Cover

WARNING DECAL PLACEMENT

This drawing shows the location(s) of the warning decal(s). **If a decal is missing or illegible, see the front cover of this manual and request a free replacement decal. Apply the decal in the location shown.** Note: The decal(s) may not be shown at actual size.

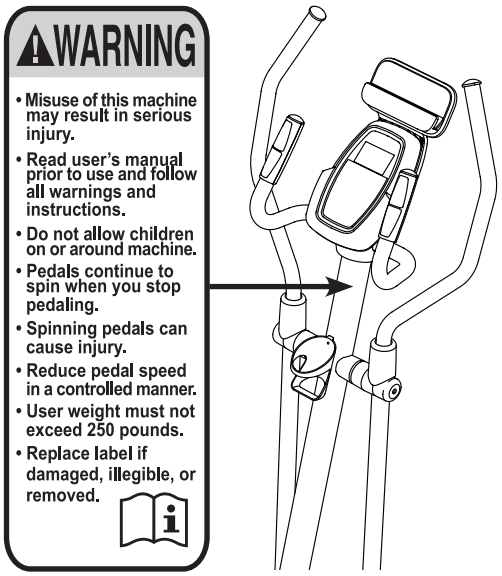

GOLD'S GYM is a registered trademark of Gold's Gym International, Inc. This product is manufactured and distributed under license from Gold's Gym Merchandising, Inc. IFIT is a registered trademark of ICON Health & Fitness, Inc. App Store is a trademark of Apple Inc., registered in the U.S. and other countries. Android and Google Play are trademarks of Google Inc. The BLUETOOTH® word mark and logos are registered trademarks of Bluetooth SIG, Inc. and are used under license. IOS is a trademark or registered trademark of Cisco in the U.S. and other countries and is used under license.

IMPORTANT PRECAUTIONS

⚠ WARNING: To reduce the risk of serious injury, read all important precautions and instructions in this manual and all warnings on your elliptical before using your elliptical. ICON assumes no responsibility for personal injury or property damage sustained by or through the use of this product.

1. It is the responsibility of the owner to ensure that all users of the elliptical are adequately informed of all precautions.
2. Before beginning any exercise program, consult your physician. This is especially important for persons over age 35 or persons with pre-existing health problems.
3. Use the elliptical only as described in this manual.
4. The elliptical is intended for home use only. Do not use the elliptical in a commercial, rental, or institutional setting.
5. Keep the elliptical indoors, away from moisture and dust. Do not put the elliptical in a garage or covered patio, or near water.
6. Place the elliptical on a level surface, with at least 3 ft. (0.9 m) of clearance in the front and rear of the elliptical and 2 ft. (0.6 m) on each side. To protect the floor or carpet from damage, place a mat under the elliptical.
7. Inspect and properly tighten all parts each time the elliptical is used. Replace any worn parts immediately.
8. Keep children under age 12 and pets away from the elliptical at all times.
9. The elliptical should not be used by persons weighing more than 250 lbs. (113 kg).
10. Wear appropriate clothes while exercising; do not wear loose clothes that could become caught on the elliptical. Always wear athletic shoes for foot protection while exercising.
11. Hold the handlebars or the upper body arms when mounting, dismounting, or using the elliptical.
12. The heart rate monitor is not a medical device. Various factors may affect the accuracy of heart rate readings. The heart rate monitor is intended only as an exercise aid in determining heart rate trends in general.
13. The elliptical does not have a freewheel; the pedals will continue to move until the flywheel stops. Reduce your pedaling speed in a controlled way.
14. Keep your back straight while using the elliptical; do not arch your back.
15. Over exercising may result in serious injury or death. If you feel faint, if you become short of breath, or if you experience pain while exercising, stop immediately and cool down.

PROTECT

YOUR FITNESS EQUIPMENT WITH AN EXTENDED SERVICE PLAN

Your new fitness equipment is not an ordinary purchase; it is an investment in your health and well being for years to come.

As the leading provider of manufacturer's extended service plans, ICON strives to protect your equipment and your future.

Please review the following service plans and find one that best fits your needs.

PREVENTIVE MAINTENANCE SERVICE PLANS

Equipment Price	3-Year Plan	5-Year Plan
$0.00 to $1000.00	$199.99	$289.99
$1001.00 to $1500.00	$259.99	$379.99
$1501.00 to $2500.00	$339.99	$489.99
(Bikes/Systems Only) $0.00 to $2500.00	$139.99	NA

Features:

- Includes an annual preventive maintenance and performance check at your convenience
- Unlimited in-home repairs; no shipping required
- Covers parts and labor on all manufacturer's defects, as well as wear and tear on parts
- Up to 5 years of coverage available

STANDARD SERVICE PLANS

Equipment Price	1-Year Plan	2-Year Plan	3-Year Plan
$0.00 to $300.00	$29.99	$39.99	$59.99
$301.00 to $1000.00	$89.99	$119.99	$149.99
$1001.00 to $2000.00	$109.99	$139.99	$179.99
$2001.00 to $3000.00	$179.99	$209.99	$239.99

Features:

- Unlimited in-home repairs; no shipping required
- Covers parts and labor on all manufacturer's defects, as well as wear and tear on parts
- Up to 3 years of coverage available

To protect your fitness equipment today, please call Customer Care at 1-800-677-3838.
Or, visit us online at www.utserv.com.

UTS
UNIVERSAL TECHNICAL SERVICES

BEFORE YOU BEGIN

Thank you for selecting the new GOLD'S GYM® STRIDE TRAINER 350I elliptical. The STRIDE TRAINER 350I provides a selection of features designed to make your workouts at home more effective and enjoyable.

For your benefit, read this manual carefully before you use the elliptical. If you have questions after reading this manual, please see the front cover of this manual. To help us assist you, note the product model number and serial number before contacting us. The model number and the location of the serial number decal are shown on the front cover of this manual.

Before reading further, please familiarize yourself with the parts that are labeled in the drawing below.

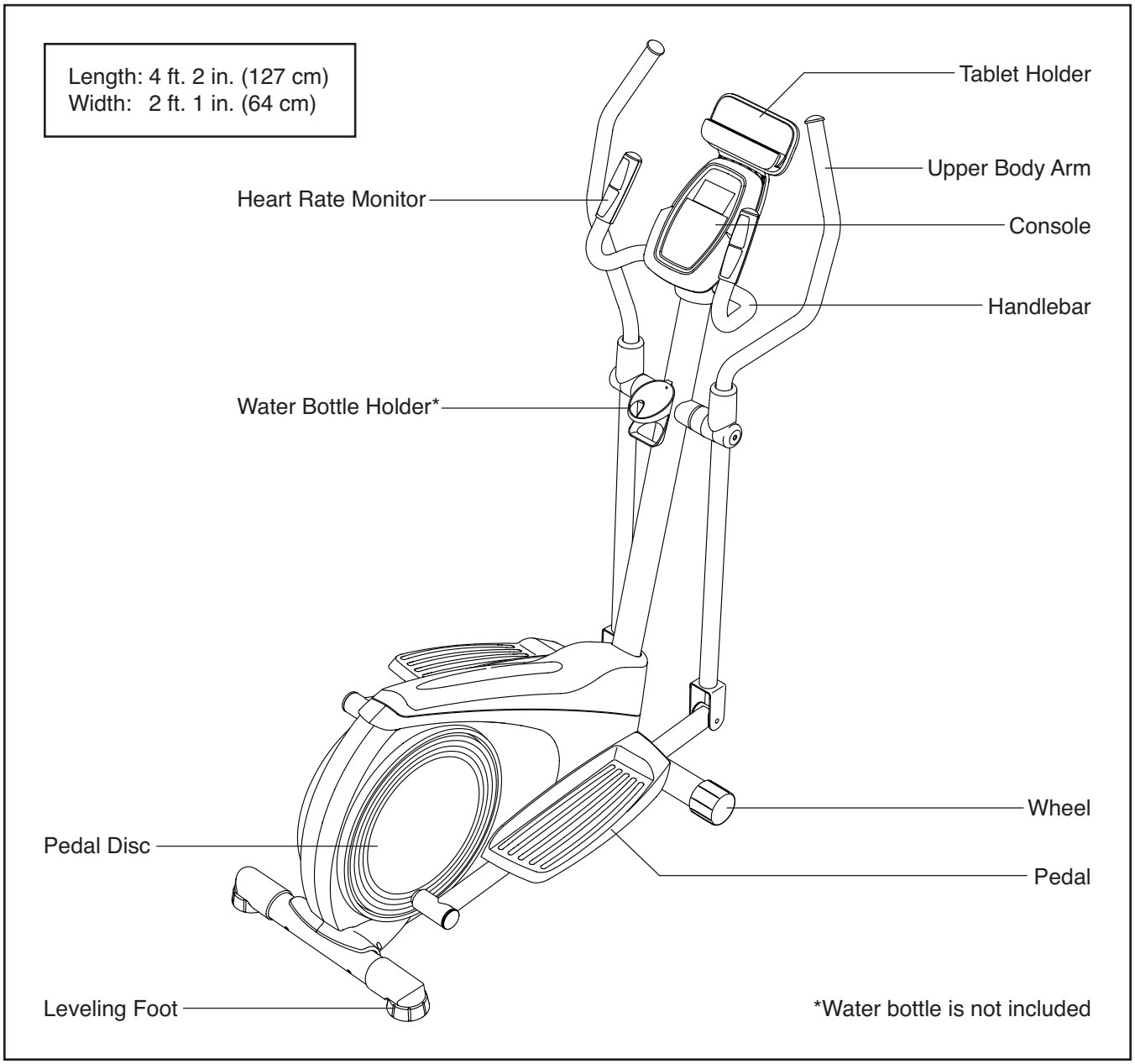

PART IDENTIFICATION CHART

Use the drawings below to identify the small parts needed for assembly. The number in parentheses below each drawing is the key number of the part, from the PART LIST near the end of this manual. The number following the key number is the quantity needed for assembly. **Note: If a part is not in the hardware kit, check to see if it has been preassembled.**

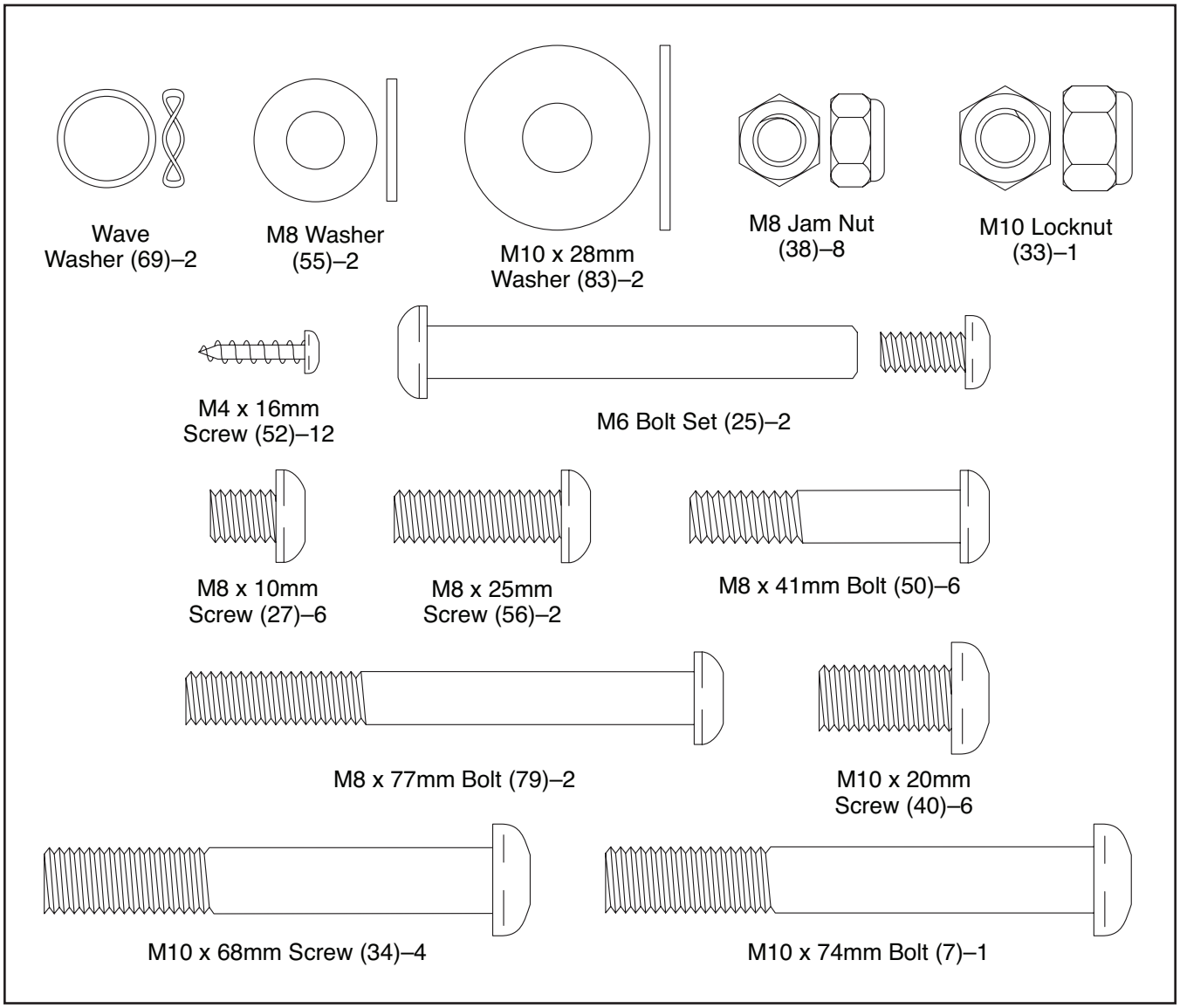

ASSEMBLY

- To hire an authorized service technician to assemble this product, call 1-800-445-2480.
- Assembly requires two persons.
- Place all parts in a cleared area and remove the packing materials. Do not dispose of the packing materials until you finish all assembly steps.
- Left and right parts are marked “L” or “Left” and “R” or “Right.”
- To identify small parts, see page 6.
- In addition to the included tool(s), assembly requires the following tools:

one adjustable wrench

one Phillips screwdriver 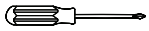

one rubber mallet

Assembly may be easier if you have a set of wrenches. To avoid damaging parts, do not use power tools.

1. **Go to www.workoutwarehouse.com/registration on your computer and register your product.**
   - activates your warranty
   - saves you time if you ever need to contact Customer Care
   - allows us to notify you of upgrades and offers

   Note: If you do not have Internet access, call Customer Care (see the front cover of this manual) and register your product.

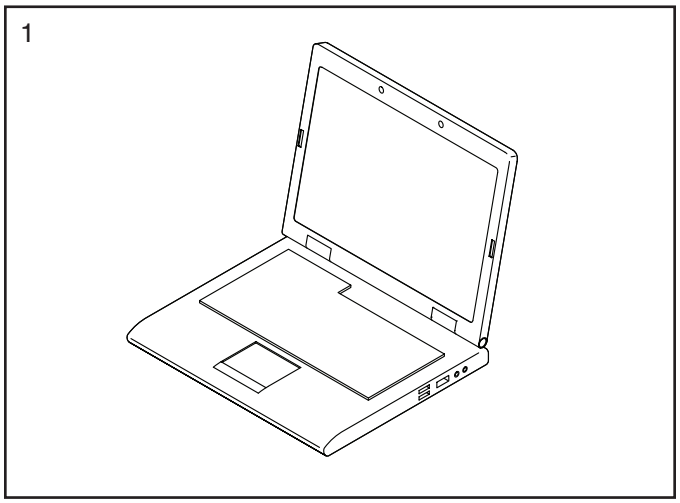

2. Identify the Front Stabilizer (63), which has Wheels (21).

   Orient the Front Stabilizer (63) as indicated by the sticker. **Make sure that the large holes in the Front Stabilizer are facing the Frame (1).**

   While a second person lifts the front of the Frame (1), attach the Front Stabilizer (63) to the Frame with two M10 x 68mm Screws (34).

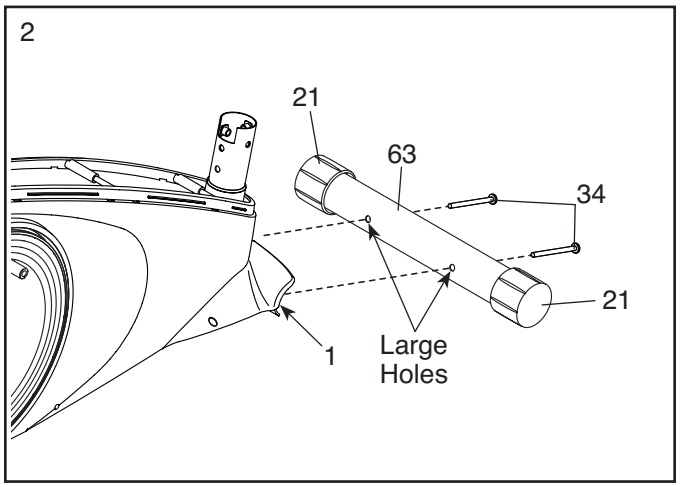

3. Orient the Rear Stabilizer (9) as indicated by the sticker.

   While a second person lifts the rear of the Frame (1), attach the Rear Stabilizer (9) to the Frame with two M10 x 68mm Screws (34).

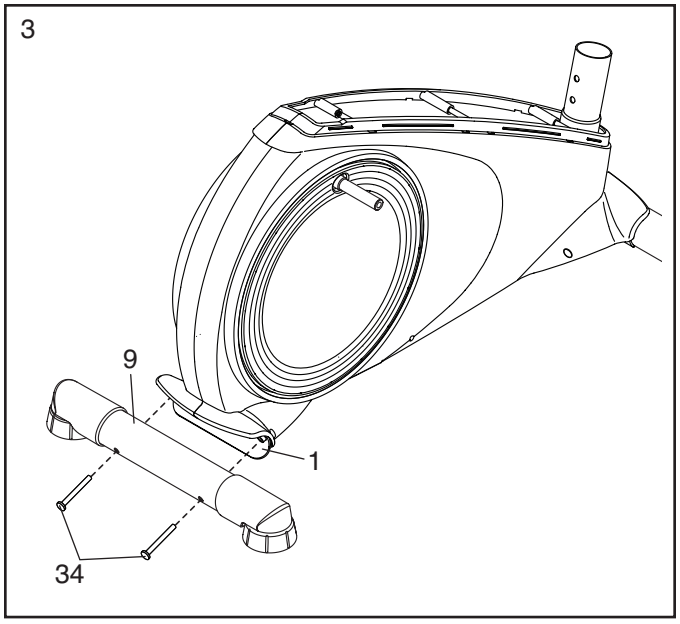

4. Orient the Upright (2) and the Top Shield (41) as shown. Slide the Top Shield upward onto the Upright. **Do not remove the wire ties from the Upright.**

   Next, slide the Upright (2) onto the Frame (1).

   Attach the Upright (2) with four M10 x 20mm Screws (40), an M10 x 74mm Bolt (7), and an M10 Locknut (33). **Do not tighten the Screws and the Bolt yet.**

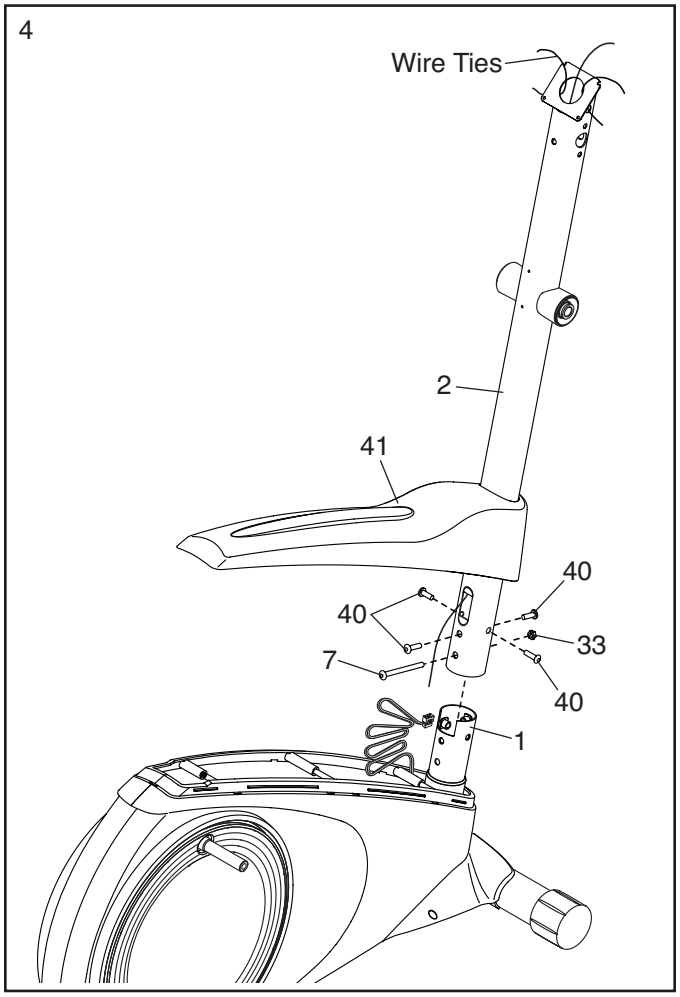

5. **See the inset drawing.** Locate the wire tie in the lower end of the Upright (2). Tie the wire tie to the Wire Harness (73). Next, pull the upper end of the wire tie until the Wire Harness is routed through the Upright.

   Tip: To prevent the Wire Harness (73) from falling into the Upright (2), secure the Wire Harness with the wire tie.

   Next, slide the Top Shield (41) downward to the Frame (1). **Do not press the Top Shield into place yet.**

   Then, attach the Water Bottle Holder (29) to the Upright (2) with two M4 x 16mm Screws (52).

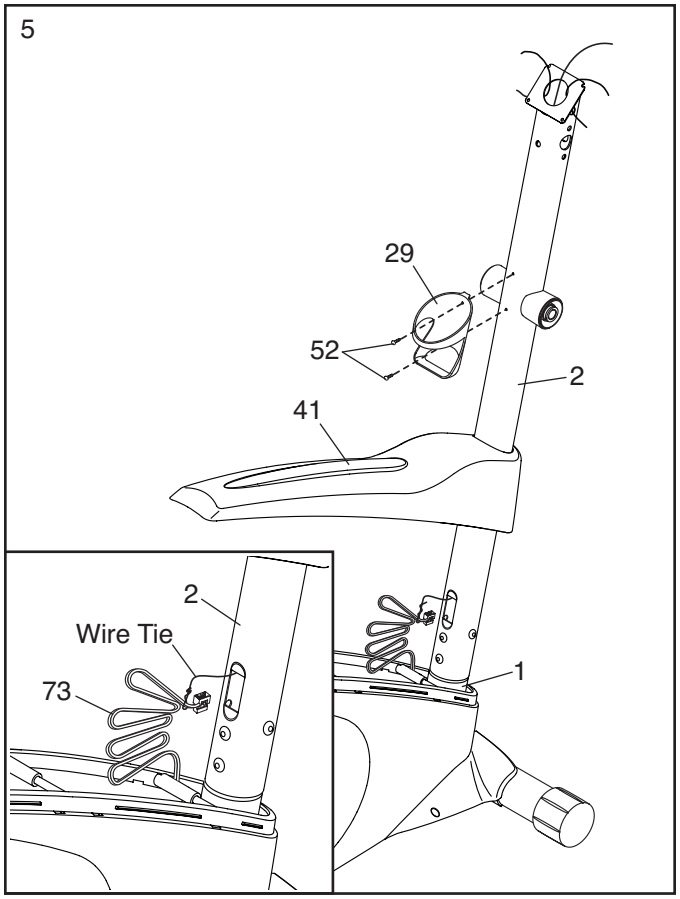

6. Identify the Left and Right Handlebars (85, 86).

   Tip: Avoid pinching the Pulse Wires (84). Attach the Left and Right Handlebars (85, 86) to the Upright (2) with an M8 x 77mm Bolt (79) and an M8 Jam Nut (38). **Do not tighten the Bolt yet.**

   Make sure that the M8 x 77mm Bolt (79) is inserted through the bottom hole in the Left and Right Handlebars (85, 86) and the Upright (2).

   Next, locate the wire ties inside the Upright (2). Tie the lower ends of the wire ties to the Pulse Wires (84). Then, pull the upper ends of the wire ties upward out of the top of the Upright.

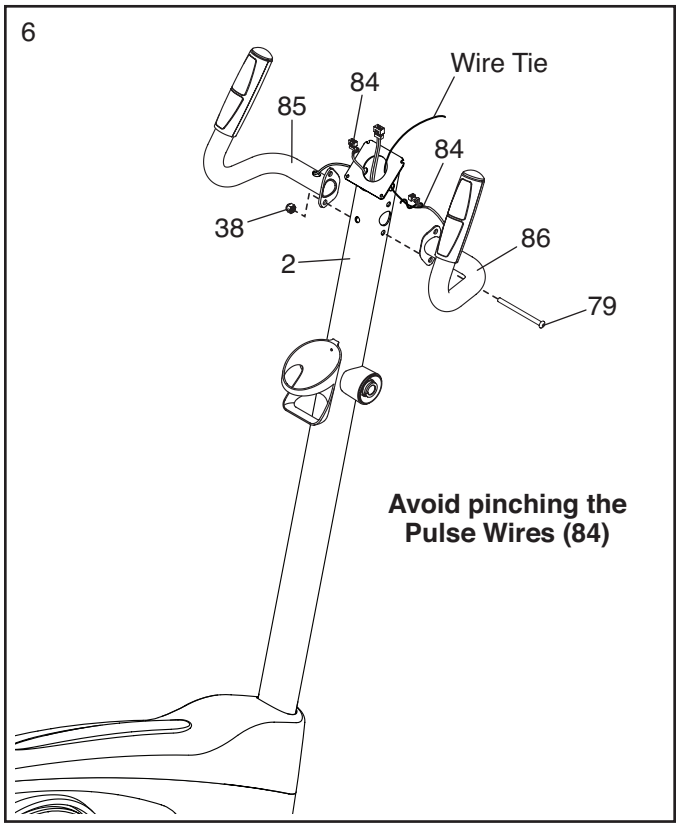

7. The Console (23) can use four AA batteries (not included); alkaline batteries are recommended. Do not use old and new batteries together or alkaline, standard, and rechargeable batteries together. **IMPORTANT: If the Console has been exposed to cold temperatures, allow it to warm to room temperature before you insert batteries. Otherwise, you may damage the console displays or other electronic components.**

   Remove the battery cover from the back of the Console (23), and insert batteries into the battery compartment. **Make sure to orient the batteries as shown by the diagram inside the battery compartment.** Then, reattach the battery cover.

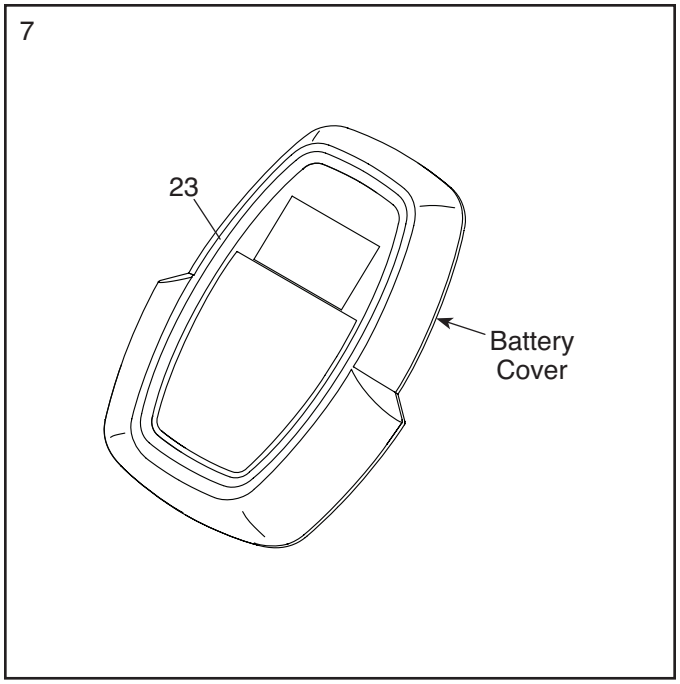

8. Untie and discard the wire ties on the Wire Harness (73) and the Pulse Wires (84).

   While a second person holds the Console (23) near the Upright (2), connect the console wires to the Wire Harness (73) and to the Pulse Wires (84).

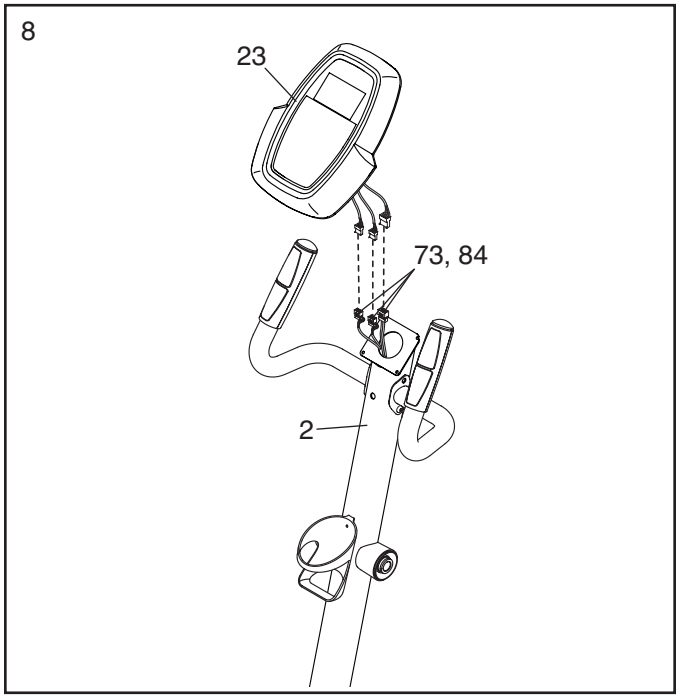

9. Insert the excess wire into the Upright (2) or into the Console (23).

   Press the Rear Upright Cover (75) into the Upright (2). Have a second person hold the Rear Upright Cover in place.

   Tip: Avoid pinching the wires. Attach the Console (23) to the Upright (2) with four M4 x 16mm Screws (52); **start all the Screws, and then tighten them.**

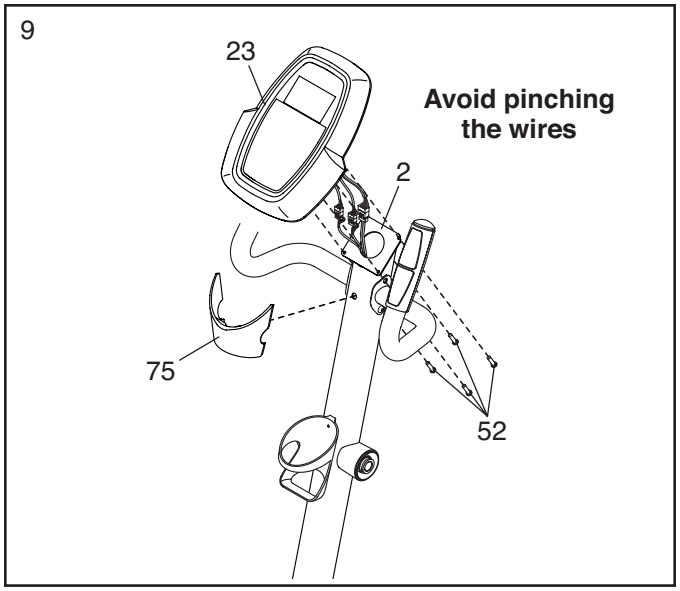

10. Finish attaching the Left and Right Handlebars (85, 86) to the Upright (2) with an M8 x 77mm Bolt (79) and an M8 Jam Nut (38).

    Tip: While inserting the M8 x 77mm Bolt (79), avoid pinching or damaging the wires inside the Upright (2).

    See step 6. Tighten the M8 x 77mm Bolt (79).

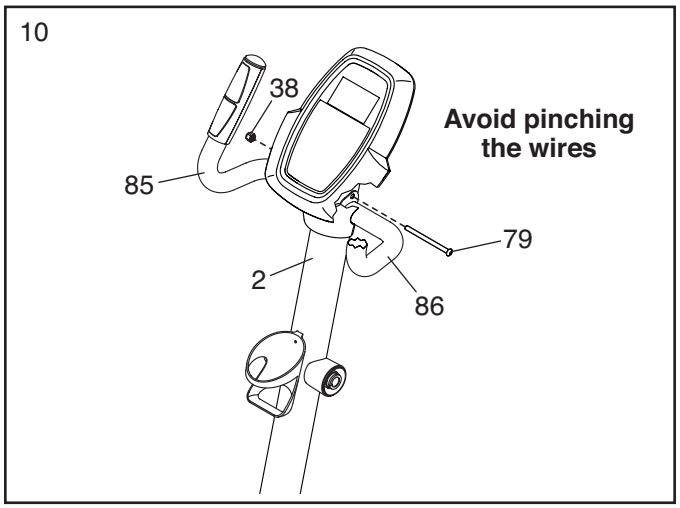

11. Attach the Front Upright Cover (81) to the Upright (2) and to the Rear Upright Cover (75) with two M4 x 16mm Screws (52).

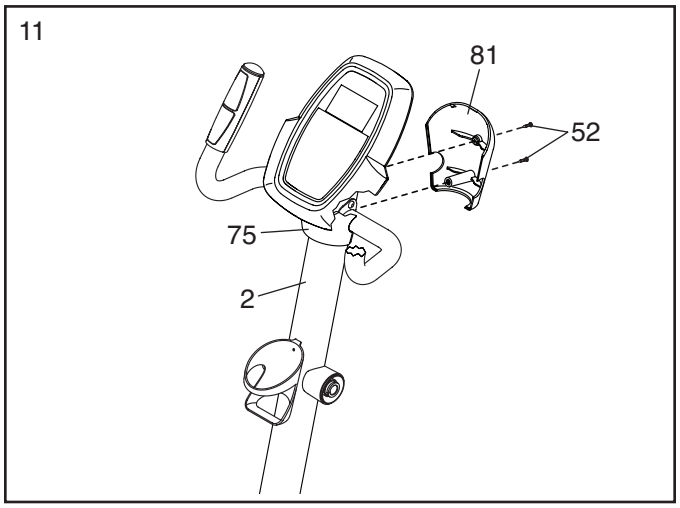

12. Identify the Right Upper Body Arm (8).

Slide an Upper Body Arm Cover (42) upward onto the Right Upper Body Arm (8).

Next, insert the Right Upper Body Arm (8) into an Upper Body Leg (5).

Tip: Have a second person hold the Upper Body Arm Cover (42) while you perform this action:

Attach the Right Upper Body Arm (8) to the Upper Body Leg (5) with three M8 x 41mm Bolts (50) and three M8 Jam Nuts (38). **Make sure that the Jam Nuts are inside the hexagonal holes.**

Assemble the Left Upper Body Arm (6) and the other Upper Body Leg (5) in the same way.

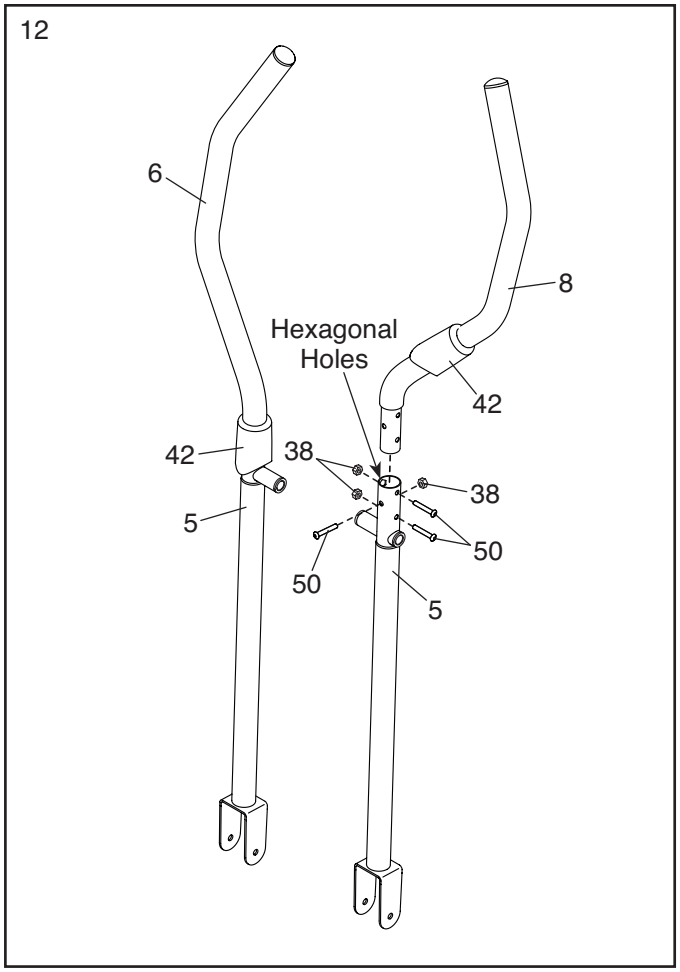

13. Insert the Pivot Axle (26) into the Upright (2), and center the Pivot Axle.

Using a small plastic bag to keep your fingers clean, apply a generous amount of the included grease to both ends of the Pivot Axle (26).

Then, slide a Wave Washer (69) onto each side of the Pivot Axle (26).

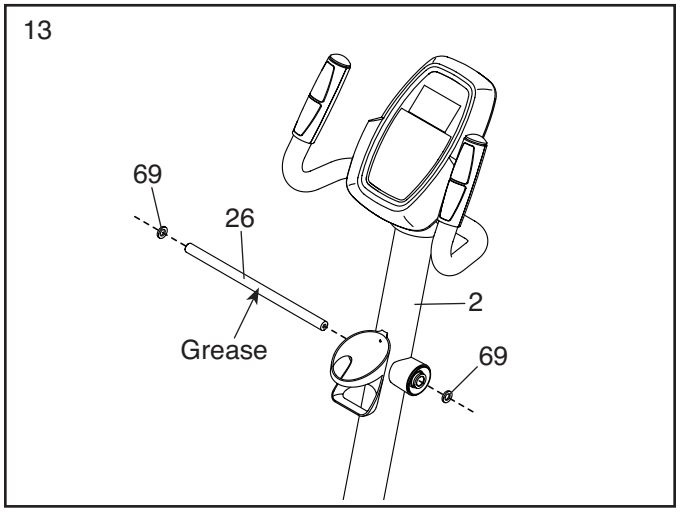

14. Orient an Upper Body Arm Spacer (47) as shown. Slide the Upper Body Arm Spacer onto the right side of the Pivot Axle (26).

    Next, slide the Right Upper Body Arm (8) onto the right side of the Pivot Axle (26).

    Repeat these actions on the other side of the elliptical.

    Tighten an M8 x 25mm Screw (56) and an M8 Washer (55) into each end of the Pivot Axle (26) **at the same time.**

    Next, slide the right Upper Body Arm Cover (42) upward. Then, press the tabs on an Axle Cap (46) into the Upper Body Arm Spacer (47). **Repeat this action on the other side of the elliptical.**

    Then, slide the Upper Body Arm Cover (42) downward to cover the M8 x 41mm Bolts (not shown). **Repeat this action on the other side of the elliptical.**

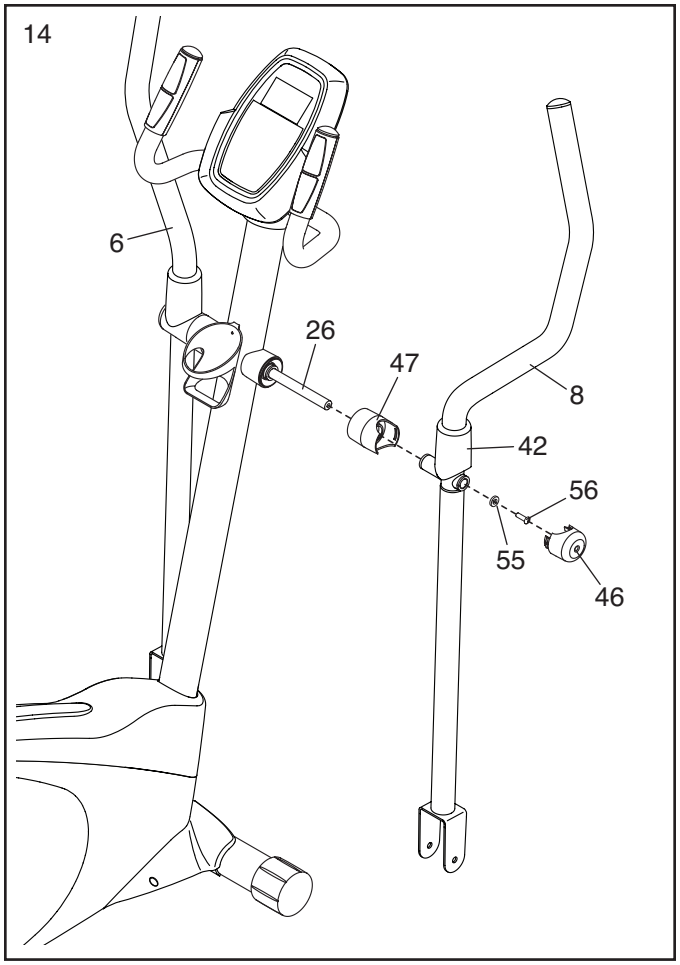

15. Identify the Right Pedal (14) and the Right Pedal Arm (12).

    Attach the Right Pedal (14) to the Right Pedal Arm (12) with three M8 x 10mm Screws (27); **start all the Screws, and then tighten them.**

    Assemble the Left Pedal (not shown) and the Left Pedal Arm (not shown) in the same way.

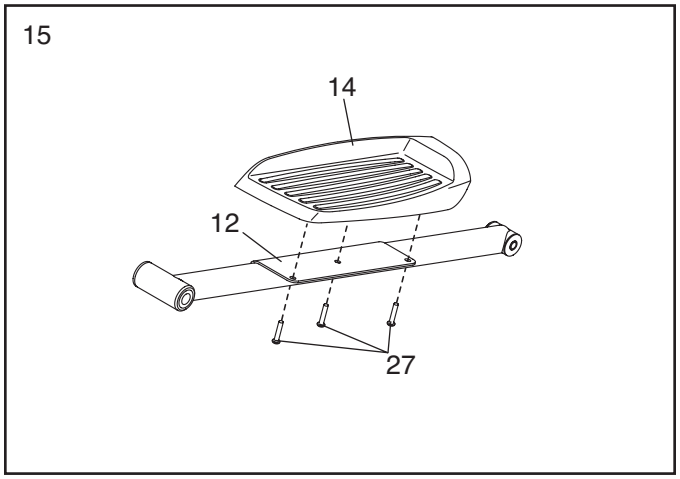

16. Apply a small amount of grease to the axle on the Right Crank Arm (80).

Slide the Right Pedal Arm (12) onto the axle on the Right Crank Arm (80).

Next, slide an M10 x 28mm Washer (83) onto an M10 x 20mm Screw (40), and tighten the Screw into the axle.

Then, press a Pedal Arm Cap (74) into the Right Pedal Arm (12).

Repeat this step on the other side of the elliptical.

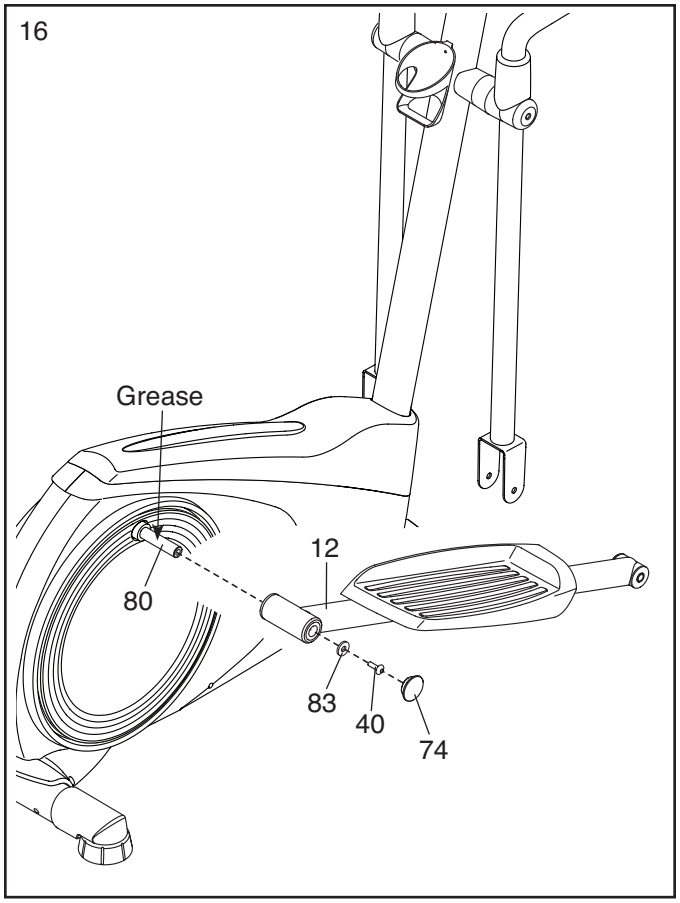

17. **See assembly steps 4 and 5.** Tighten the M10 x 20mm Screws (40) and the M10 x 74mm Bolt (7). Then, press the Top Shield (41) into place.

Apply a small amount of grease to an M6 Bolt Set (25).

Hold the end of the Right Pedal Arm (12) inside the bracket on the right Upper Body Leg (5).

Attach the right Upper Body Leg (5) to the Right Pedal Arm (12) with the M6 Bolt Set (25).

Repeat this step on the other side of the elliptical.

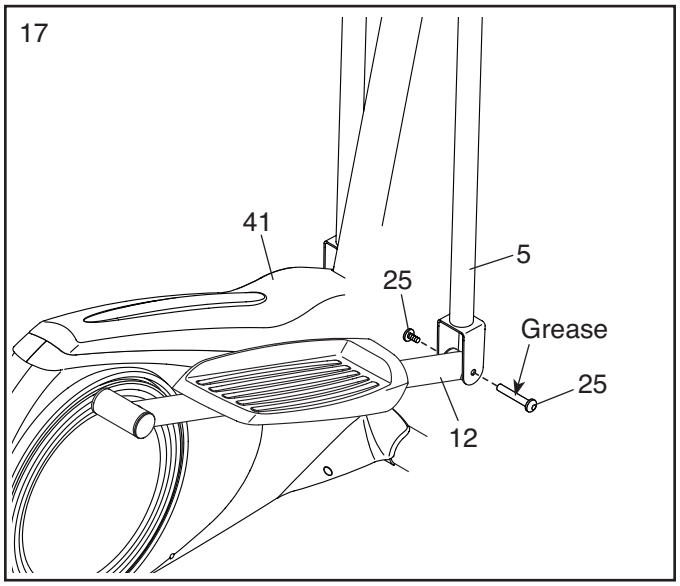

18. Attach the Tablet Holder (32) to the back of the Console (23) with four M4 x 16mm Screws (52); **start all the Screws, and then tighten them.**

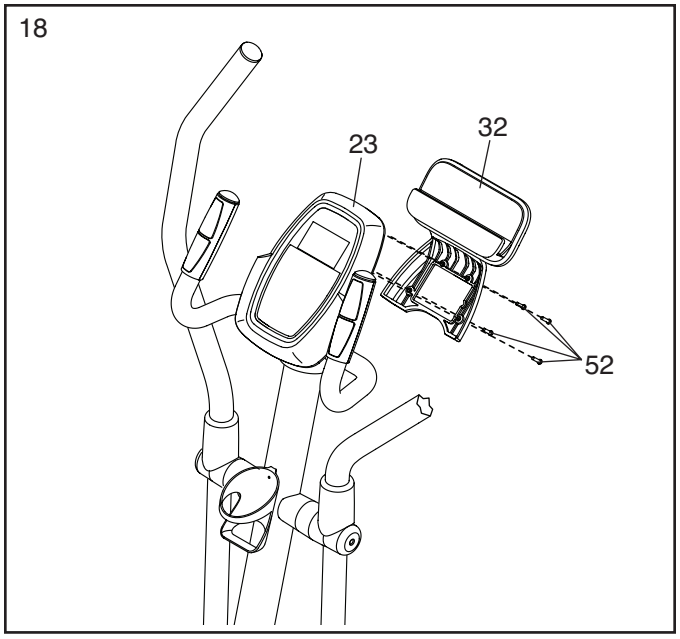

19. **Make sure that all parts of the elliptical are properly tightened.** Note: Extra parts may be included. To protect the floor or carpet from damage, place a mat under the elliptical.

HOW TO USE THE ELLIPTICAL

HOW TO MOVE THE ELLIPTICAL

Due to the size and weight of the elliptical, moving it requires two persons. Stand in front of the elliptical, hold the upright, and place one foot against one of the front wheels. Pull on the upright and have a second person lift the rear stabilizer until the elliptical will roll on the wheels. Carefully move the elliptical to the desired location, and then lower it to the floor.

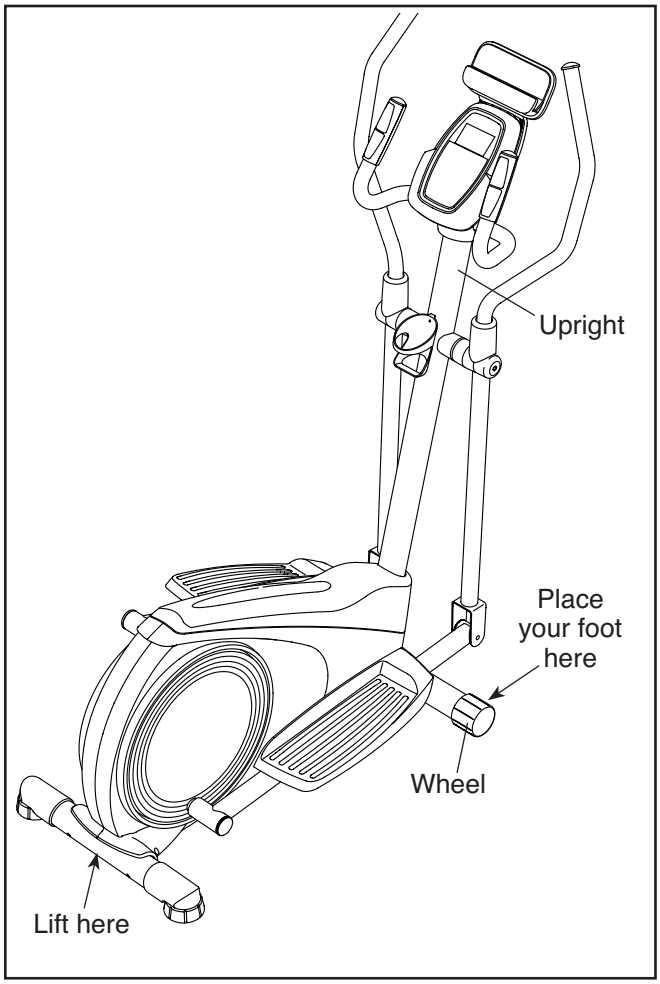

HOW TO EXERCISE ON THE ELLIPTICAL

To mount the elliptical, hold the handlebars or the upper body arms and step onto the pedal that is in the lowest position. Then, step onto the other pedal.

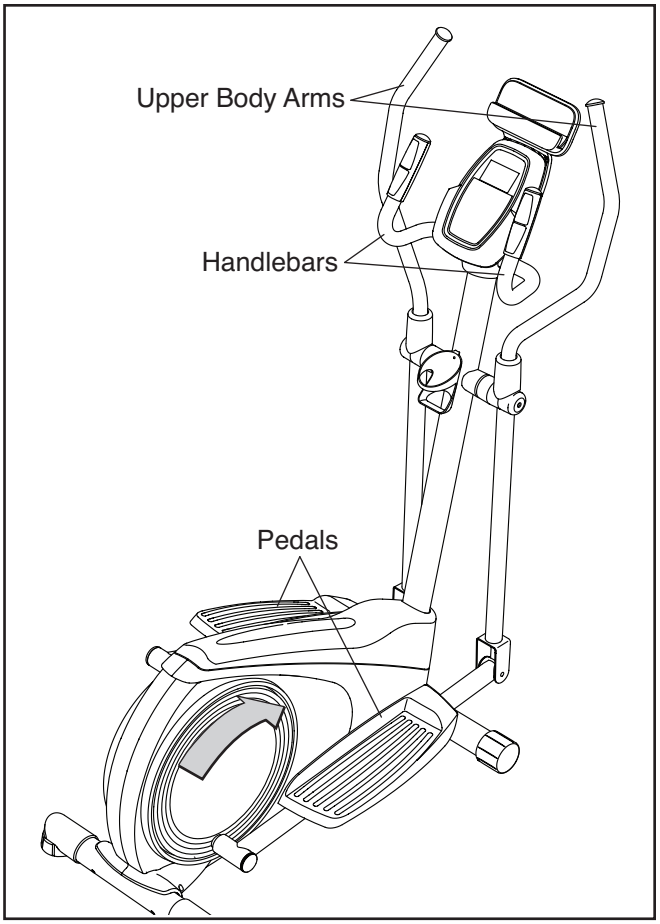

Push the pedals until they begin to move with a continuous motion. **Note: The pedal discs can turn in either direction. It is recommended that you move the pedal discs in the direction shown by the arrow; however, for variety, you can turn the pedal discs in the opposite direction.**

To dismount the elliptical, wait until the pedals come to a complete stop. **Note: The elliptical does not have a free wheel; the pedals will continue to move until the flywheel stops.** When the pedals are stationary, step off the highest pedal first. Then, step off the lowest pedal.

HOW TO LEVEL THE ELLIPTICAL

If the elliptical rocks slightly on your floor during use, turn one or both of the leveling feet beneath the rear stabilizer until the rocking motion is eliminated.

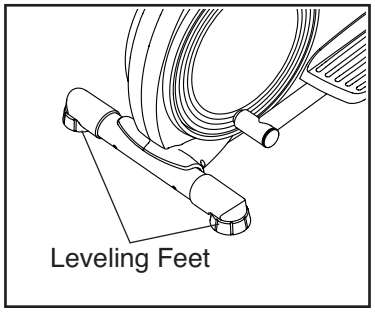

HOW TO USE THE TABLET HOLDER

IMPORTANT: The tablet holder was designed for use with most full-size tablets and smart phones. Do not place any other electronic device or object into the tablet holder.

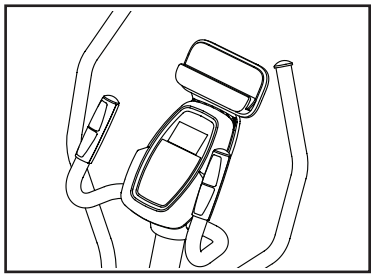

To insert a tablet or smart phone into the tablet holder, set the bottom edge of the tablet or smart phone in the tray. **Make sure that the tablet or smart phone is firmly secured in the tablet holder.** Reverse these actions to remove the tablet or smart phone from the tablet holder. holder.

CONSOLE DIAGRAM

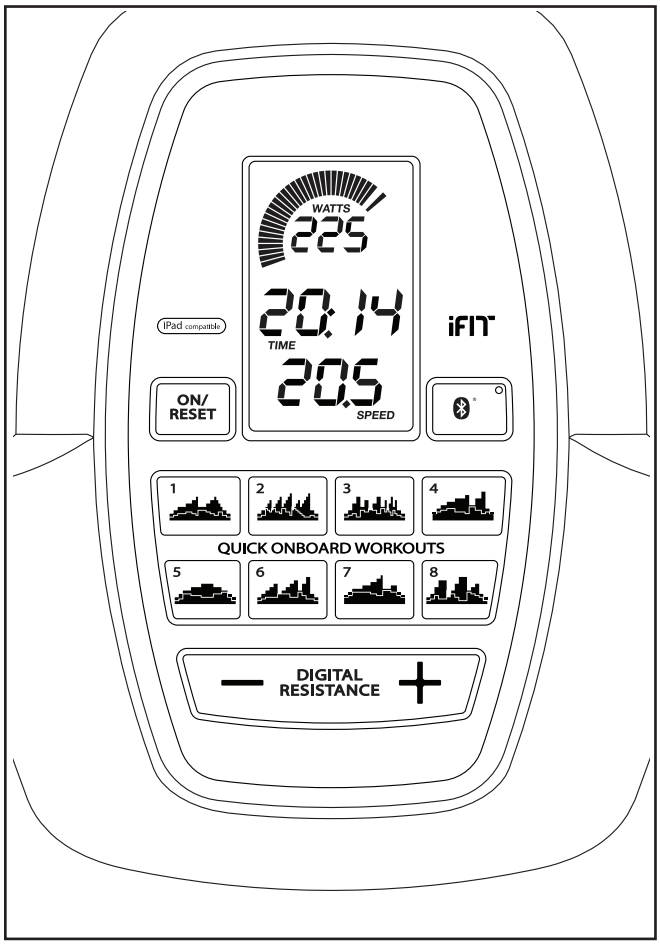

FEATURES OF THE CONSOLE

The advanced console offers an array of features designed to make your workouts more effective and enjoyable.

When you use the manual mode of the console, you can change the resistance of the pedals with the touch of a button. As you pedal, the console will provide continuous exercise feedback. You can even measure your heart rate using the handgrip heart rate monitor or a compatible heart rate monitor. **See page 22 for information about purchasing an optional chest heart rate monitor.**

The console also offers a selection of quick onboard workouts that automatically change the resistance of the pedals and prompt you to vary your pedaling pace while guiding you through an effective workout.

You can also connect your smart device to the console and use an iFit® app to record and track your workout information.

To use the manual mode, see page 19. **To use a quick onboard workout,** see page 21.

To connect your smart device to the console, see page 22. **To connect your heart rate monitor to the console,** see page 22. **To change console settings,** see page 23.

Before using the console, make sure that batteries are installed (see assembly step 7 on page 10). If there is a sheet of plastic on the display, remove the plastic.

HOW TO USE THE MANUAL MODE

1. **Turn on the console.**

   Press any button or begin pedaling to turn on the console.

   When you turn on the console, the displays will turn on, a tone will sound, and the console will be ready for use.

2. **Select the manual mode.**

   When you turn on the console, the manual mode will be selected automatically.

   If you have selected a workout, reselect the manual mode by pressing the On/Reset button.

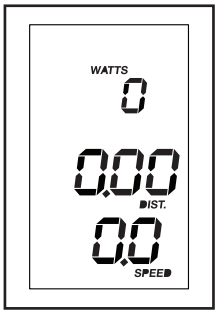

3. **Begin pedaling and change the resistance of the pedals as desired.**

   As you pedal, change the resistance of the pedals by pressing the Digital Resistance increase and decrease buttons.

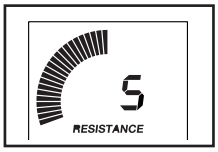

   Note: After you press the buttons, it will take a moment for the pedals to reach the selected resistance level.

4. **Follow your progress with the displays.**

   The speed meter—This display will provide a visual representation of your pedaling speed. As you increase or decrease your pedaling speed, bars will appear or disappear in the speed meter.

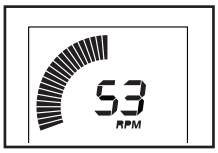

   Note: During a quick onboard workout, this display will show a target speed zone for each segment of the workout.

   The upper display—This display will show your pedaling speed in revolutions per minute (RPM) and your power output in watts. The display will change every few seconds.

   This display will also show the resistance level of the pedals for a few seconds each time the resistance level changes.

   This display will also show your heart rate (BPM) when you use the handgrip heart rate monitor or a compatible heart rate monitor (see step 5).

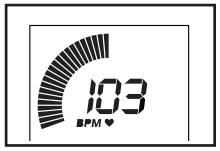

   The center display—This display will show the distance (Dist.) you have pedaled in miles or kilometers and the elapsed time. The display will change every few seconds.

   Note: During a quick onboard workout, the display will show the time remaining in the workout instead of the elapsed time.

   The lower display—This display will show your pedaling speed in miles per hour or kilometers per hour and the approximate number of calories (Cals.) you have burned. The display will change every few seconds.

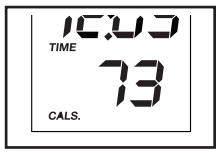

   To pause the console, stop pedaling. When the console is paused, the displays will pause. To continue your workout, simply resume pedaling.

   To reset the displays to zero, press the On/Reset button.

   Note: The console can show pedaling speed and distance in either miles or kilometers. To change the unit of measurement, see THE SETTINGS MODE on page 23.

5. **Measure your heart rate if desired.**

You can measure your heart rate using either the handgrip heart rate monitor or a compatible heart rate monitor. **For information about purchasing an optional chest heart rate monitor, see page 22.**

The console is compatible with all BLUETOOTH® Smart heart rate monitors. To connect your heart rate monitor to the console, see page 22.

Note: If you use both heart rate monitors at the same time, the BLUETOOTH Smart heart rate monitor will have priority.

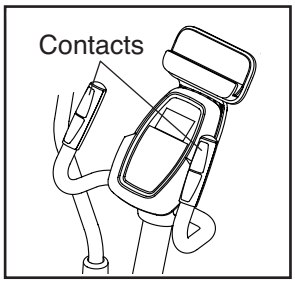

If there are sheets of plastic on the metal contacts on the handgrip heart rate monitor, remove the plastic. In addition, make sure that your hands are clean. To measure your heart rate, hold the handgrip heart rate monitor with your palms resting against the contacts. **Avoid moving your hands or gripping the contacts tightly.**

When your pulse is detected, your heart rate will be shown in the upper display. **For the most accurate heart rate reading, hold the contacts for at least 15 seconds.**

If your heart rate is not shown, make sure that your hands are positioned as described. Be careful not to move your hands excessively or to squeeze the contacts tightly. For optimal performance, clean the contacts using a soft cloth; **never use alcohol, abrasives, or chemicals to clean the contacts.**

6. **When you are finished exercising, the console will turn off automatically.**

If the pedals do not move for several seconds, a series of tones will sound, the console will pause, and displays will pause.

If the pedals do not move for several minutes, the console will turn off and the displays will be reset.

HOW TO USE A QUICK ONBOARD WORKOUT

1. **Turn on the console.**

   Press any button or begin pedaling to turn on the console.

   When you turn on the console, the displays will turn on, a tone will sound, and the console will be ready for use.

2. **Select a quick onboard workout.**

   To select a quick onboard workout, press the desired Quick Onboard Workouts button. The name of the workout will appear in the display.

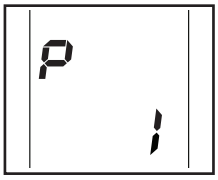

3. **Start the workout.**

   Begin pedaling to start the workout.

   Each workout is divided into one-minute segments. One resistance level and one target speed are programmed for each segment. Note: The same resistance level and/or target speed may be programmed for consecutive segments.

   At the end of each segment of the workout, a series of tones will sound, and the resistance level for the next segment will appear in the upper display for a few seconds to alert you. The resistance of the pedals will then change.

   The speed meter will show two flashing bars that represent the target speed zone for the segment; the target speed zone includes a range of speeds that are within a few RPMs of the target speed for the segment. The solid bars represent your actual pedaling speed.

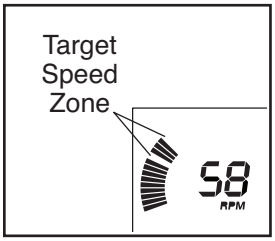

   As you exercise, keep your pedaling speed within the target speed zone for the current segment by increasing or decreasing your pedaling speed or by increasing or decreasing the resistance of the pedals.

   IMPORTANT: The target speed is intended only to provide motivation. Make sure to pedal at a speed and a resistance level that is comfortable for you.

   If the resistance level for the current segment is too high or too low, you can manually override the setting by pressing the Digital Resistance buttons. **IMPORTANT: When the current segment of the workout ends, the pedals will automatically adjust to the resistance level programmed for the next segment.**

   If you stop pedaling for several seconds, a series of tones will sound and the workout will pause.

   To restart the workout, simply resume pedaling. The workout will continue until the last segment of the workout ends.

4. **Follow your progress with the displays.**

   See step 4 on page 19.

5. **Measure your heart rate if desired.**

   See step 5 on page 20.

6. **When you are finished exercising, the console will turn off automatically.**

   See step 6 on page 20.

HOW TO CONNECT YOUR SMART DEVICE TO THE CONSOLE

1. **Download and install the iFit app on your smart device.**

   On your iOS® or Android™ smart device, open the App Store℠ or the Google Play™ store, search for the free iFit app, and then install the app on your smart device. **Make sure that the BLUETOOTH option is enabled on your smart device.**

   Then, open the iFit app and follow the instructions to set up an iFit account and customize settings.

2. **Connect your smart device to the console.**

   Follow the instructions in the iFit app to connect your smart device to the console.

   When a connection is established, the LED on the console will flash blue. Press the Bluetooth Smart button on the console to confirm the connection; the LED on the console will then turn solid blue.

3. **Record and track your workout information.**

   Follow the instructions in the iFit app to record and track your workout information.

4. **Disconnect your smart device from the console if desired.**

   To disconnect your smart device from the console, press and hold the Bluetooth Smart button on the console for 5 seconds; the LED on the console will light while the button is held and turn off when the button is released.

   Note: All BLUETOOTH connections between the console and other devices (including any smart devices, heart rate monitors, and so forth) will be disconnected.

THE OPTIONAL CHEST HEART RATE MONITOR

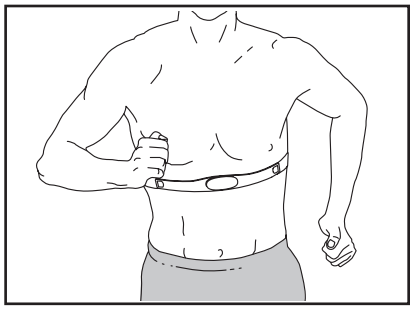

Whether your goal is to burn fat or to strengthen your cardiovascular system, the key to achieving the best results is to maintain the proper heart rate during your workouts. The optional chest heart rate monitor will enable you to continuously monitor your heart rate while you exercise, helping you to reach your personal fitness goals. **To purchase a chest heart rate monitor, please see the front cover of this manual.**

Note: The console is compatible with all BLUETOOTH Smart heart rate monitors.

HOW TO CONNECT YOUR HEART RATE MONITOR TO THE CONSOLE

The console is compatible with all BLUETOOTH Smart heart rate monitors.

To connect your BLUETOOTH Smart heart rate monitor to the console, press the Bluetooth Smart button on the console. When a connection is established, the LED on the console will flash red twice.

Note: If there is more than one compatible heart rate monitor near the console, the console will connect to the heart rate monitor with the strongest signal.

To disconnect your heart rate monitor from the console, press and hold the Bluetooth Smart button on the console for 5 seconds; the LED on the console will light while the button is held and turn off when the button is released.

Note: All BLUETOOTH connections between the console and other devices (including any smart devices, heart rate monitors, and so forth) will be disconnected.

THE SETTINGS MODE

The console features a settings mode that allows you to select a unit of measurement for the console and to view console usage information.

To select the settings mode, press and hold down the On/Reset button until the settings mode information appears in the display.

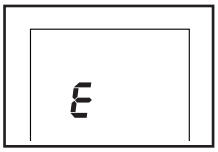

The console can show pedaling speed and distance in either miles or kilometers. The upper display will show the selected unit of measurement. An E for English miles or an M for metric kilometers will appear in the display. To change the unit of measurement, press the 2 Quick Onboard Workouts button repeatedly.

Note: When you replace the batteries, it may be necessary to reselect the unit of measurement.

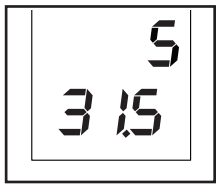

Press the 1 Quick Onboard Workouts button to view the total distance and the total time. The center display will show the total time (in hours) that the console has been used since the elliptical was purchased. The lower display will show the total distance (in miles or kilometers) that the elliptical has been pedaled.

To exit the settings mode, press the On/Reset button twice.

FCC INFORMATION

This equipment has been tested and found to comply with the limits for a Class B digital device, pursuant to part 15 of the FCC Rules. These limits are designed to provide reasonable protection against harmful interference in a residential installation. This equipment generates, uses, and can radiate radio frequency energy and, if not installed and used in accordance with the instructions, may cause harmful interference to radio communications. However, there is no guarantee that interference will not occur in a particular installation. If this equipment does cause harmful interference to radio or television reception, which can be determined by turning the equipment off and on, try to correct the interference by one or more of the following measures:

- Reorient or relocate the receiving antenna.
- Increase the separation between the equipment and the receiver.
- Connect the equipment into an outlet on a circuit different from that to which the receiver is connected.
- Consult the dealer or an experienced radio/TV technician for help.

FCC CAUTION: To assure continued compliance, use only shielded interface cables when connecting to computer or peripheral devices. Changes or modifications not expressly approved by the party responsible for compliance could void the user's authority to operate this equipment.

MAINTENANCE AND TROUBLESHOOTING

MAINTENANCE

Regular maintenance is important for optimal performance and to reduce wear. Inspect and properly tighten all parts each time the elliptical is used. Replace any worn parts immediately.

To clean the elliptical, use a damp cloth and a small amount of mild dish soap. **IMPORTANT: Keep liquids away from the console and keep the console out of direct sunlight. During storage, remove the batteries from the console.**

CONSOLE TROUBLESHOOTING

Most console problems are the result of low batteries. To replace the batteries, see assembly 7 on page 10.

If the handgrip heart rate monitor does not function properly, see step 5 on page 20.

HOW TO ADJUST THE REED SWITCH

If the console does not display correct feedback, the reed switch should be adjusted.

Using a standard screwdriver, remove the Top Shield (41).

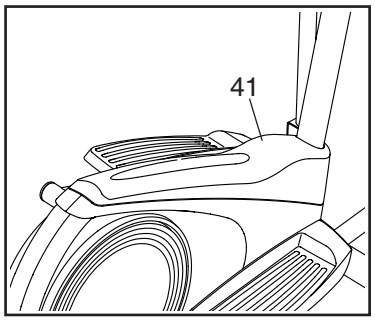

Note: For clarity, the right pedal disc is not shown in the drawing below.

Locate the Reed Switch (53). Loosen, but do not remove, the M4 x 16mm Screw (52).

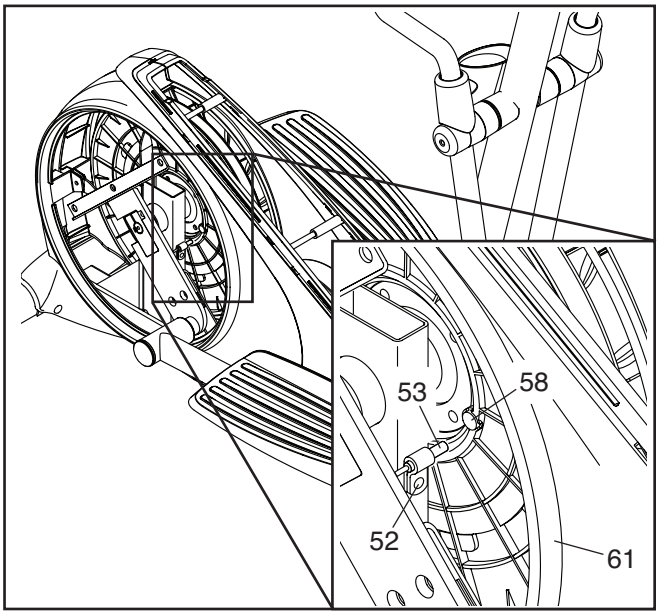

Next, rotate the Pulley (61) until a Magnet (58) is aligned with the Reed Switch (53). Slide the Reed Switch slightly toward or away from the Magnet. Then, retighten the M4 x 16mm Screw (52). Rotate the Pulley for a moment.

Repeat these actions until the console displays correct feedback.

When the reed switch is correctly adjusted, reattach the top shield.

HOW TO ADJUST THE DRIVE BELT

If you can feel the pedals slip while you are pedaling, even when the resistance is adjusted to the highest level, the drive belt may need to be adjusted.

To adjust the drive belt, you must remove the pedal arms, the pedal discs, and the left shield.

First, see step 17 on page 14 and step 16 on page 14 and remove the Left and Right Pedal Arms (11, 12).

Next, see EXPLODED DRAWING A on page 30. Using a standard screwdriver, remove the left and right Pedal Discs (15).

Next, remove all of the M4 x 16mm Screws (52) from the Left and Right Shields (3, 4).

Next, remove the two M6 x 18mm Screws (43). Then, remove the Left Shield (3).

Next, loosen the M8 x 22mm Screw (65), and turn the M10 x 60mm Bolt (62) until the Drive Belt (19) is tight.

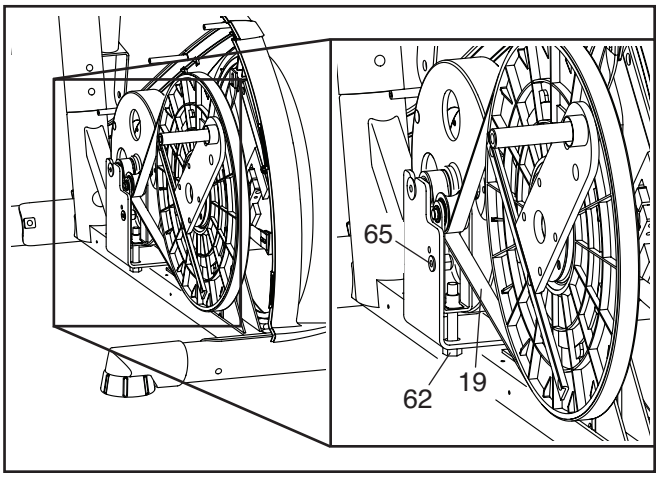

When the Drive Belt (19) is tight, tighten the M8 x 22mm Screw (65).

Then, reattach the shields, the pedal discs, and the pedal arms.

EXERCISE GUIDELINES

⚠ WARNING: Before beginning this or any exercise program, consult your physician. This is especially important for persons over age 35 or persons with pre-existing health problems.

The heart rate monitor is not a medical device. Various factors may affect the accuracy of heart rate readings. The heart rate monitor is intended only as an exercise aid in determining heart rate trends in general.

These guidelines will help you to plan your exercise program. For detailed exercise information, obtain a reputable book or consult your physician. Remember, proper nutrition and adequate rest are essential for successful results.

EXERCISE INTENSITY

Whether your goal is to burn fat or to strengthen your cardiovascular system, exercising at the proper intensity is the key to achieving results. You can use your heart rate as a guide to find the proper intensity level. The chart below shows recommended heart rates for fat burning and aerobic exercise.

165	*155*	*145*	*140*	*130*	*125*	*115*	💗
145	*138*	*130*	*125*	*118*	*110*	*103*	💗
125	*120*	*115*	*110*	*105*	*95*	*90*	♥
20	*30*	*40*	*50*	*60*	*70*	*80*	

To find the proper intensity level, find your age at the bottom of the chart (ages are rounded off to the nearest ten years). The three numbers listed above your age define your "training zone." The lowest number is the heart rate for fat burning, the middle number is the heart rate for maximum fat burning, and the highest number is the heart rate for aerobic exercise.

Burning Fat—To burn fat effectively, you must exercise at a low intensity level for a sustained period of time. During the first few minutes of exercise, your body uses carbohydrate calories for energy. Only after the first few minutes of exercise does your body begin to use stored fat calories for energy. If your goal is to burn fat, adjust the intensity of your exercise until your heart rate is near the lowest number in your training zone. For maximum fat burning, exercise with your heart rate near the middle number in your training zone.

Aerobic Exercise—If your goal is to strengthen your cardiovascular system, you must perform aerobic exercise, which is activity that requires large amounts of oxygen for prolonged periods of time. For aerobic exercise, adjust the intensity of your exercise until your heart rate is near the highest number in your training zone.

WORKOUT GUIDELINES

Warming Up—Start with 5 to 10 minutes of stretching and light exercise. A warm-up increases your body temperature, heart rate, and circulation in preparation for exercise.

Training Zone Exercise—Exercise for 20 to 30 minutes with your heart rate in your training zone. (During the first few weeks of your exercise program, do not keep your heart rate in your training zone for longer than 20 minutes.) Breathe regularly and deeply as you exercise; never hold your breath.

Cooling Down—Finish with 5 to 10 minutes of stretching. Stretching increases the flexibility of your muscles and helps to prevent post-exercise problems.

EXERCISE FREQUENCY

To maintain or improve your condition, complete three workouts each week, with at least one day of rest between workouts. After a few months of regular exercise, you may complete up to five workouts each week, if desired. Remember, the key to success is to make exercise a regular and enjoyable part of your everyday life.

SUGGESTED STRETCHES

The correct form for several basic stretches is shown at the right. Move slowly as you stretch; never bounce.

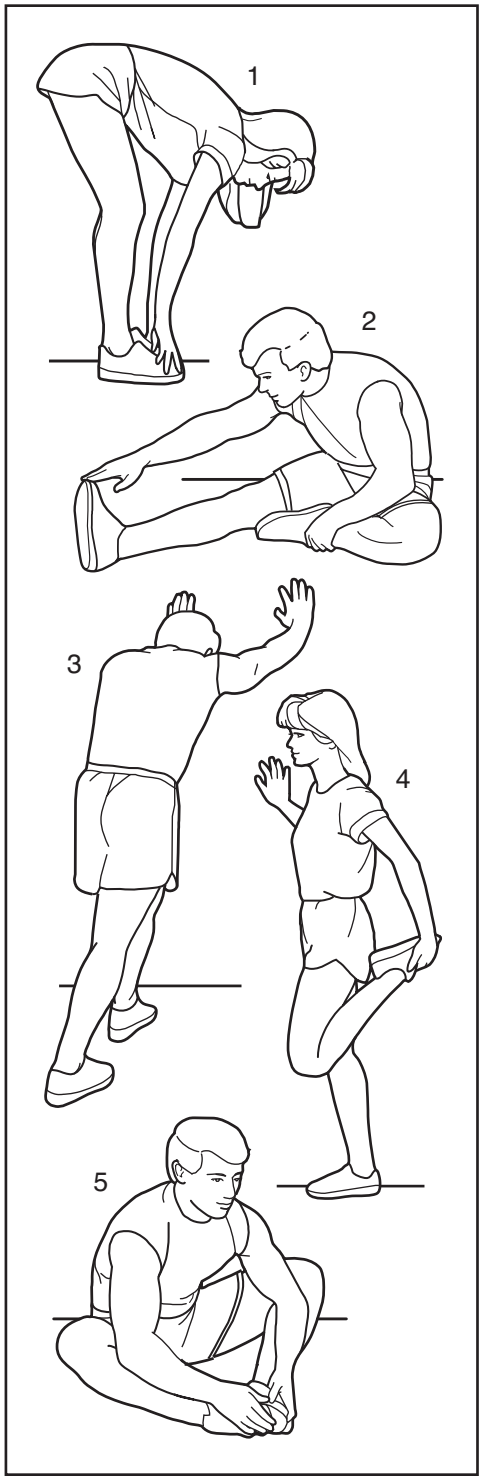

1. Toe Touch Stretch

Stand with your knees bent slightly and slowly bend forward from your hips. Allow your back and shoulders to relax as you reach down toward your toes as far as possible. Hold for 15 counts, then relax. Repeat 3 times. Stretches: Hamstrings, back of knees and back.

2. Hamstring Stretch

Sit with one leg extended. Bring the sole of the opposite foot toward you and rest it against the inner thigh of your extended leg. Reach toward your toes as far as possible. Hold for 15 counts, then relax. Repeat 3 times for each leg. Stretches: Hamstrings, lower back and groin.

3. Calf/Achilles Stretch

With one leg in front of the other, reach forward and place your hands against a wall. Keep your back leg straight and your back foot flat on the floor. Bend your front leg, lean forward and move your hips toward the wall. Hold for 15 counts, then relax. Repeat 3 times for each leg. To cause further stretching of the achilles tendons, bend your back leg as well. Stretches: Calves, achilles tendons and ankles.

4. Quadriceps Stretch

With one hand against a wall for balance, reach back and grasp one foot with your other hand. Bring your heel as close to your buttocks as possible. Hold for 15 counts, then relax. Repeat 3 times for each leg. Stretches: Quadriceps and hip muscles.

5. Inner Thigh Stretch

Sit with the soles of your feet together and your knees outward. Pull your feet toward your groin area as far as possible. Hold for 15 counts, then relax. Repeat 3 times. Stretches: Quadriceps and hip muscles.

NOTES

PART LIST

Model No. GGEL62915.1 R0715A

Key No.	Qty.	Description
1	1	Frame
2	1	Upright
3	1	Left Shield
4	1	Right Shield
5	2	Upper Body Leg
6	1	Left Upper Body Arm
7	1	M10 x 74mm Bolt
8	1	Right Upper Body Arm
9	1	Rear Stabilizer
10	1	Key
11	1	Left Pedal Arm
12	1	Right Pedal Arm
13	1	Left Pedal
14	1	Right Pedal
15	2	Pedal Disc
16	1	Left Crank Arm
17	1	Eddy Mechanism
18	1	Shield Bracket
19	1	Drive Belt
20	2	Rear Stabilizer Cap
21	2	Wheel
22	1	Belt Idler
23	1	Console
24	2	Foam Grip
25	2	M6 Bolt Set
26	1	Pivot Axle
27	6	M8 x 10mm Screw
28	1	M6 Washer
29	1	Water Bottle Holder
30	1	Left Crank Spacer
31	2	Bearing
32	1	Tablet Holder
33	1	M10 Locknut
34	4	M10 x 68mm Screw
35	1	M10 x 25mm Screw
36	2	M3 x 16mm Screw
37	2	Outer Pedal Arm Bushing
38	8	M8 Jam Nut
39	2	Inner Pedal Arm Bushing
40	6	M10 x 20mm Screw
41	1	Top Shield
42	2	Upper Body Arm Cover
43	2	M6 x 18mm Screw
44	2	Small Upper Body Arm Cap
45	1	M6 x 14mm Screw
46	2	Axle Cap
47	2	Upper Body Arm Spacer
48	2	Frame Spacer
49	6	Upper Body Arm Bushing
50	6	M8 x 41mm Bolt
51	4	M10 x 22mm Washer
52	32	M4 x 16mm Screw
53	1	Reed Switch/Wire
54	1	Clamp
55	3	M8 Washer
56	2	M8 x 25mm Screw
57	1	Mechanism Axle
58	2	Magnet
59	2	Wiring Clamp
60	4	Front Pedal Arm Bushing
61	1	Pulley
62	1	M10 x 60mm Bolt
63	1	Front Stabilizer
64	8	Mushroom Fastener
65	1	M8 x 22mm Screw
66	2	M6 Locknut
67	2	M10 Thin Locknut
68	1	Right Crank Spacer
69	2	Wave Washer
70	2	Leveling Foot
71	1	M8 Locknut
72	1	Resistance Motor
73	1	Wire Harness
74	2	Pedal Arm Cap
75	1	Rear Upright Cover
76	4	M8 x 10mm Hex Screw
77	1	Resistance Cable
78	1	M4 x 16mm Bright Screw
79	2	M8 x 77mm Bolt
80	1	Right Crank Arm
81	1	Front Upright Cover
82	1	Wire Bushing
83	2	M10 x 28mm Washer
84	2	Pulse Wire
85	1	Left Handlebar
86	1	Right Handlebar
87	2	Pulse Grip
*	–	Assembly Tool
*	–	Grease Packet
*	–	User’s Manual

Note: Specifications are subject to change without notice. For information about ordering replacement parts, see the back cover of this manual. *These parts are not illustrated.

EXPLODED DRAWING A

Model No. GGEL62915.1 R0715A

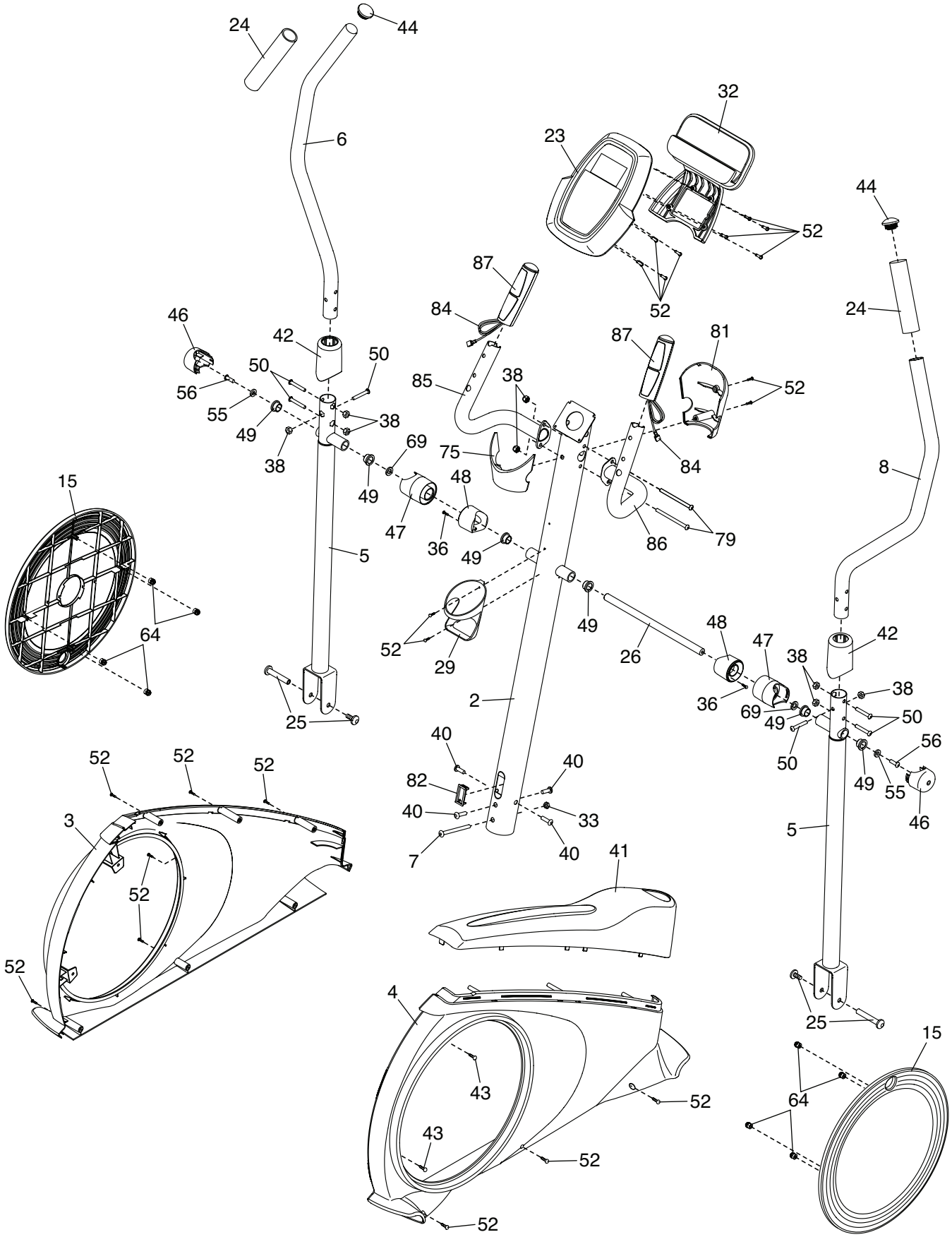

EXPLODED DRAWING B

Model No. GGEL62915.1 R0715A

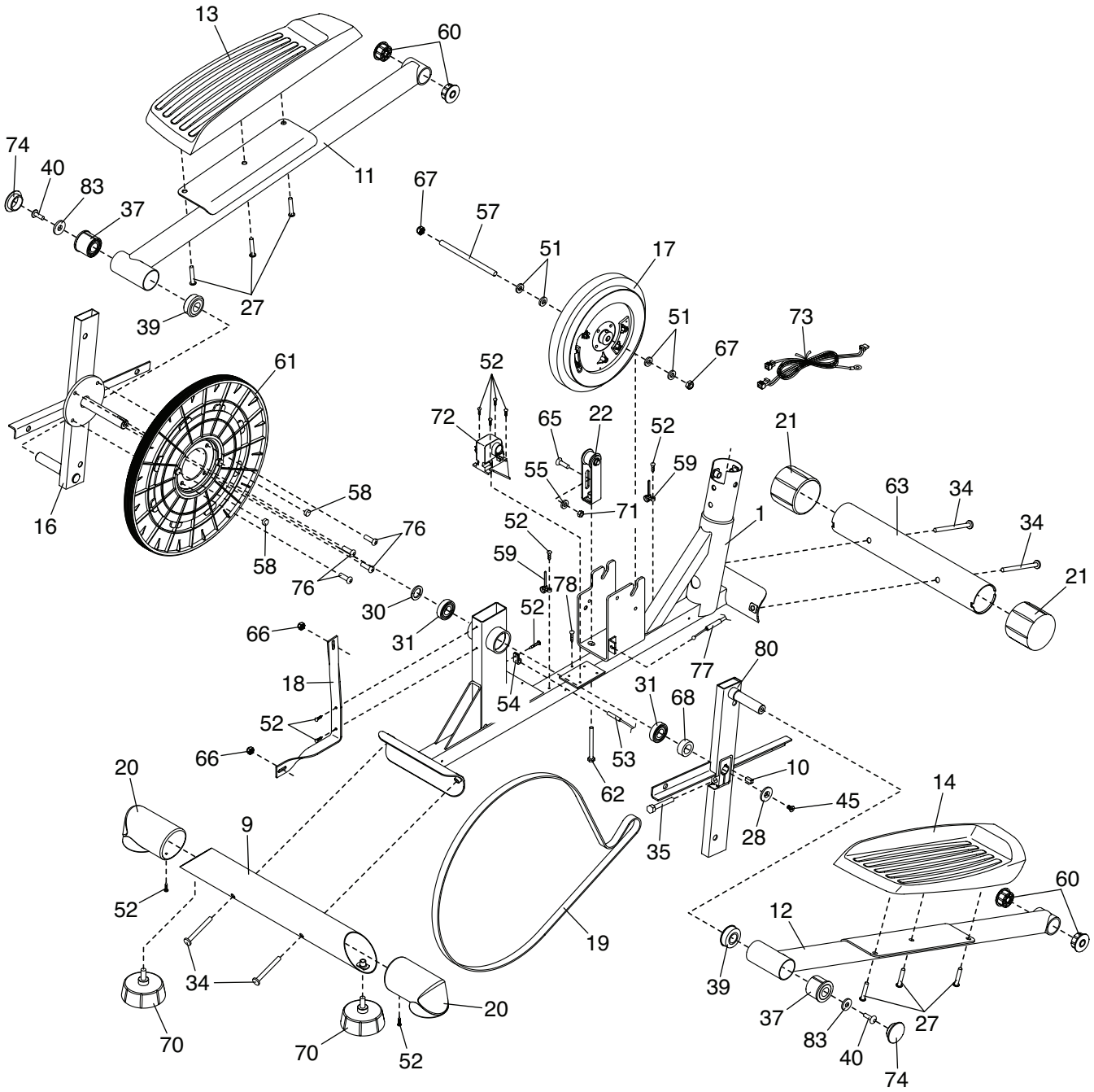

ORDERING REPLACEMENT PARTS

To order replacement parts, please see the front cover of this manual. To help us assist you, be prepared to provide the following information when contacting us:

- the model number and serial number of the product (see the front cover of this manual)
- the name of the product (see the front cover of this manual)
- the key number and description of the replacement part(s) (see the PART LIST and the EXPLODED DRAWING near the end of this manual)

LIMITED WARRANTY

IMPORTANT: To protect your fitness equipment with an extended service plan, see page 4.

ICON Health & Fitness, Inc. (ICON) warrants this product to be free from defects in workmanship and material, under normal use and service conditions. Parts and labor are warranted for ninety (90) days from the date of purchase.

This warranty extends only to the original purchaser (customer). ICON's obligation under this warranty is limited to repairing or replacing, at ICON's option, the product through one of its authorized service centers. All repairs for which warranty claims are made must be preauthorized by ICON. If the product is shipped to a service center, freight charges to and from the service center will be the customer's responsibility. If replacement parts are shipped while the product is under warranty, the customer will be responsible for a minimal handling charge. For in-home service, the customer will be responsible for a minimal trip charge. This warranty does not extend to freight damage to the product. This warranty will automatically be voided if the product is used as a store display model, if the product is purchased or transported outside the USA, if all instructions in this manual are not followed, if the product is abused or improperly or abnormally used, or if the product is used for commercial or rental purposes. No other warranty beyond that specifically set forth above is authorized by ICON.

ICON is not responsible or liable for indirect, special, or consequential damages arising out of or in connection with the use or performance of the product; damages with respect to any economic loss, loss of property, loss of revenues or profits, loss of enjoyment or use, or costs of removal or installation; or other consequential damages of any kind. Some states do not allow the exclusion or limitation of incidental or consequential damages. Accordingly, the above limitation may not apply to the customer.

The warranty extended hereunder is in lieu of any and all other warranties, and any implied warranties of merchantability or fitness for a particular purpose are limited in their scope and duration to the terms set forth herein. Some states do not allow limitations on how long an implied warranty lasts. Accordingly, the above limitation may not apply to the customer.

This warranty provides specific legal rights; the customer may have other rights that vary from state to state.

ICON Health & Fitness, Inc., 1500 S. 1000 W., Logan, UT 84321-9813

Part No. 374144 R0715A

Printed in China © 2015 ICON Health & Fitness, Inc.