ZD200 Series

Direct Thermal Printers

User's Guide

ZEBRA

212089-02EN

ZEBRA and the stylized Zebra head are trademarks of Zebra Technologies Corporation, registered in many jurisdictions worldwide. All other trademarks are the property of their respective owners. ©2019 Zebra Technologies Corporation and/or its affiliates. All rights reserved.Information in this document is subject to change without notice. The software described in this document is furnished under a license agreement or nondisclosure agreement. The software may be used or copied only in accordance with the terms of those agreements.

For further information regarding legal and proprietary statements, please go to:

COPYRIGHTS: www.zebra.com/copyright
WARRANTY: www.zebra.com/warranty
END USER LICENSE AGREEMENT: www.zebra.com/eula
SOFTWARE: www.zebra.com/linkoslegal

Terms of Use

Proprietary Statement

This manual contains proprietary information of Zebra Technologies Corporation and its subsidiaries ("Zebra Technologies"). It is intended solely for the information and use of parties operating and maintaining the equipment described herein. Such proprietary information may not be used, reproduced, or disclosed to any other parties for any other purpose without the express, written permission of Zebra Technologies.

Product Improvements

Continuous improvement of products is a policy of Zebra Technologies. All specifications and designs are subject to change without notice.

Liability Disclaimer

Zebra Technologies takes steps to ensure that its published Engineering specifications and manuals are correct; however, errors do occur. Zebra Technologies reserves the right to correct any such errors and disclaims liability resulting therefrom.

Limitation of Liability

In no event shall Zebra Technologies or anyone else involved in the creation, production, or delivery of the accompanying product (including hardware and software) be liable for any damages whatsoever (including, without limitation, consequential damages including loss of business profits, business interruption, or loss of business information) arising out of the use of, the results of use of, or inability to use such product, even if Zebra Technologies has been advised of the possibility of such damages. Some jurisdictions do not allow the exclusion or limitation of incidental or consequential damages, so the above limitation or exclusion may not apply to you.

Publication Date

May 2019

About

This guide is for integrators and operators of the Zebra ZD200 Series desktop printers. Use this guide to install, change configuration, operate, and physically support the product.

Other online resources are available to support this printer include:

- “How To” videos
- Product specifications
- Accessories, supplies, parts, and software links
- Various setup and configuration guides
- Programmer’s manuals
- Software to connect and use your product
- Firmware
- Fonts
- Utilities
- Knowledge base and support contacts
- Warranty and repair links

Use this link to get to your Online product support resources:

- ZD200 Series Direct Thermal Printer — www.zebra.com/zd200d-info

Zebra OneCare Printer Service and Support

For maximum productivity, we can help your business ensure its Zebra printers are Online and ready for business. See the descriptions of the Zebra OneCare service and support options available for your printers Online at this link: www.zebra.com/zebraonecare

Document Conventions

The following graphic icons are used throughout the documentation set. These icons and their associated meanings are described below.

Caution • If the precaution is not heeded, the user could receive minor or moderate injury.

Eye Injury Caution • If the precaution is not taken, the user's eyes could be damaged. EXAMPLE: Wear protective eyewear when installing or removing E-rings, C-clips, snap rings, springs, and mounting buttons. These are under tension and could fly off.

Electrical Shock Caution • If the precaution is not taken, the user could receive an electrical shock. EXAMPLE: Turn off (O) the printer and disconnect it from the power source before performing the following procedure.

Hot Surface Caution • If the precaution is not taken, the user could be burned. EXAMPLE: The printhead may be hot and could cause sever burns. Allow the printhead to cool.

Product Damage Caution • If the precaution is not taken, the product could be damaged. EXAMPLE: Unplugging the computer without properly shutting it down may corrupt the data on your hard drive.

ESD Caution • If the precaution is not taken, the product electronics could be damaged by an electrostatic discharge. EXAMPLE: Observe proper electrostatic safety precautions when handling static-sensitive components such as circuit boards and printheads.

Important • The text here indicates information that is important for the user to know. EXAMPLE: Run the setup.exe file for the product BEFORE connecting the product to your printer.

Note • The text here indicates information that is supplemental for the user to know and that is not required to complete a task. EXAMPLE: Refer to zebra.com for complete information on product warranties.

Contents

Terms of Use 2
Proprietary Statement 2
Product Improvements 2
Liability Disclaimer 2
Limitation of Liability 2
Publication Date 2

• About 3

Zebra OneCare Printer Service and Support 3
Document Conventions 4

• Contents 5

• Introduction 9

4-inch Desktop Thermal Printers 9
Common Desktop Printer Features: 9
4-inch Desktop Printer Options: 10
Zebra Label Printing Solution 11
Modes of Printing 11
What's in the Box? 12
Unpack and Inspect the Printer 13

• Printer Features 14

External Printer Features 14
Inside the ZD200 Series Direct Thermal Printers 15
Label Dispenser Option (factory installed only) 16
Cutter Option (factory installed only) 16

• Controls and Indicators 17

User Interface 17
User Interface Controls 18
FEED Button Modes 19
FEED Button Modes - Power ON 19
FEED Button Modes - Power OFF 20

Contents

• **Setup** **21**

Printer Setup Overview 21
Select a Location for the Printer 22
Attaching Power 23
Getting Ready to Print 24
Preparing and Handling Media 24
Media Storage Tips 24
Loading Roll Media 25
Setting Media Sensing by Media type 25
Instructions for media loading: 26
Run a SmartCal Media Calibration 31
SmartCal Procedure 31
Test Printing with the Configuration Report 32
Detecting a Media Out Condition 33
Connecting your Printer to a Computer 34
Interface Cable Requirements 34
Wi-Fi and Bluetooth Classic Wireless Connectivity Option 37

• **Setup for Windows® OS** **38**

Windows to Printer Communication Setup (Overview) 38
install Windows® Printer Drivers 39
Setting Up the Wi-Fi Print Server Option 39
Configure Using the ZebraNet Bridge's Connectivity Wizard 40
Using a Configuration Script 46
Bluetooth Option Configuration 48
Connecting to a Windows Vista® SP2 or Windows 7® Central Device 50
Connecting the Printer to a Windows 8 OS 53
Connecting the Printer to a Windows 10 OS 54
After Your Printer is Connected 57

• **Print Operations** **59**

Thermal Printing 59
Replacing Supplies while Using the Printer 59
Sending Files to the Printer 59
Determining Your Printer's Configuration Settings 60
Select a Print Mode 60
Adjusting the Print Quality 60
Adjusting the Print Width 61
Replacing Supplies while Using the Printer 61
Printing on Fan-Fold Media 62
Printing with Externally Mounted Roll Media 64
Externally Mounted Roll Media Considerations: 64
Using the Label Dispenser Option 65

Printer Fonts 69
Identifying Fonts in Your Printer 69
Localizing the Printer with Code Pages 69
Asian fonts and Other Large Font Sets 70
Media Roll Adapters 71

• Maintenance 72

Cleaning 72
Cleaning Supplies 72
Recommended Cleaning Schedule 73
Cleaning the Printhead 75
Media Path Cleaning 76
Sensor Cleaning 79
Platen Cleaning and Replacement 80
Updating Printer Firmware 84
Other Printer Maintenance 84
Fuses 84

• Troubleshooting 85

Resolving Alerts and Errors 85
Alert: Media Path 85
Alert: PRINTHEAD OVER TEMP 87
Alert: PRINTHEAD SHUTDOWN 88
Alert: PRINTHEAD UNDER TEMP 88
Resolving Print Issues 89
Issue: No Print on the Label 90
Issue: Labels Are Distorted in Size or Print Area Start Position Varies 90
Communication Issues 91
Issue: Label Job Sent, Data Transfers, But No Print 91
Miscellaneous Issues 92
Issue: Settings are Lost or Ignored 92
Issue: Non-continuous labels act as Continuous labels. 93
Issue: Printer Locks-Up 93
Printer Diagnostics 94
Printer Network (and Bluetooth) Configuration Report 95
Manual Calibration 96
Communications Diagnostics 97

• Interface Connector Wiring 99

Universal Serial Bus (USB) Interface 99

• **Dimensions** **100**

• **Media** **106**

Types of Thermal Media 107

Determining Thermal Media Types 107

General Media and Print Specifications 108

• **ZPL Configuration** **111**

Managing the ZPL Printer Configuration 111

Configuration Setting to Command Cross-reference 113

Printer Memory Management and Related Status Reports 116

ZPL Programming for Memory Management 116

Introduction

This section introduces the Zebra® ZD200 Series 4-inch desktop direct thermal label printers. The overview includes the printer's features and options, and what ships with your new printer.

This document covers the following ZD-series desktop printer models: ZD220 and ZD230

- ZD200 Series Direct Thermal Printer — www.zebra.com/zd200d-info

4-inch Desktop Thermal Printers

The Zebra® 4-inch Desktop printers are compact label printers with essential features and options.

The ZD200 direct thermal printers can support:

- ZD220 model has a print speed of 102 mm/sec (4 ips - inches per second).
- ZD230 model has a maximum print speed of 152 mm/s (6 ips - inches per second) and 102 mm/sec (4 ips - inches per second) default speed.
- ZD200 models have a 203 dpi (dots per inch print density).
- ZPL ™ and EPL Zebra printer programming languages.

Common Desktop Printer Features:

- OpenAccess ™ design for simplified media loading.
- Color-coded "touch points" for operator controls and media guides.
- Simple single control button and single multi colored status indicator.
- Zebra's printer operating system — an open platform with software tools needed to integrate, manage, and maintain the printer.
- Media roll support:
  - Outer Diameter (O.D.): Up to 127 mm (5 inch) and
  - Inner Diameter (I.D.) roll cores:12.7 mm (0.5 inch), 25.4 mm (1 inch), and an optional 1.5 inch (38.1 mm) media core adapter set.
- Half width Movable Media Sensor provides compatibility with a wide range of media types:
  - Compatible with full or partial width black mark media - center to left side of media.
  - Compatible with notched or slotted media - center to left side of media.
  - Center position transmissivity sensor for use with label gap/web media.
- On–the–fly OpenType and TrueType font scaling and import, Unicode, resident scalable font (Swiss 721 Latin 1 font), and a selection of resident bitmap fonts.

- Backwards compatibility focused technology eases printer replacement:
  - Drop in replacement of legacy Zebra desktop printers. The printer accepts both EPL and ZPL programming languages.
- Universal Serial Bus (USB) 2.0 interface
- Factory installed network models support printer configuration via a setup utility running on mobile devices.
- XML-Enabled printing—allows XML communications for barcode label printing, eliminating license fees and print server hardware and lowering customization and programming costs.
- Zebra ™ Global Printing Solution – supports Microsoft Windows keyboard encoding (and ANSI), Unicode UTF-8 and UTF 16 (Unicode Transformation Formats), XML, ASCII (7 and 8 bit used by legacy programs and systems), basic single and double byte font encoding, JIS and Shift-JIS (Japanese International Standards), Hexadecimal encoding, and custom character mapping (DAT table creation, font linking, and character remapping).
  - Printers have the Simplified Chinese SimSun font pre-installed (China only).
- A minimum of 50 MB of internal (E:\) printer memory for storing forms, fonts, and graphics.

4-inch Desktop Printer Options:

- Factory Installed Wired and Wireless options:
  - Wi-Fi (802.11ac – includes a/b/g/n), Bluetooth Classic 4.X (3.X compatible).
  - Factory installed Internal Ethernet Print Server (LAN, RJ-45 connector) — supports 10Base-T, 100Base-TX and fast Ethernet 10/100 auto-switching networks for wired connectivity.
- Media Core Adapter kit include adapters for media rolls with Outer Diameters (O.D.) up to 127 mm (5 inches):
  - 38.1 mm (1.5 inch) I.D. media cores.
- Asian Language support with printer configuration options for the large Simplified and Traditional Chinese, Japanese, or Korean character sets.

Zebra Label Printing Solution

The printer is just one of three (3) parts of a printing solution. To print; you need a printer (ZD200 Series), compatible media (direct thermal media), and software (driver, applications or programming) to tell the printer what to do and print. The printer can print without being connected to other devices or systems.

The media may be labels, tags, tickets, receipt paper, fan-fold stacks, tamper proof labels, etc.

Zebra assists you with label design and print with the free label and form design software: ZebraDesigner for Windows PC operating systems.

The Zebra web site or your reseller will be able to help you identify media for your desired use case.

Modes of Printing

You can operate this printer in many different modes and media configurations:

- Direct thermal printing (which uses heat sensitive media to print).
- Standard Tear-Off mode allows you to tear off each label/receipt or batch print a strip of labels and tear them off after it is printed.
- Label Dispense Mode: If an factory optional dispenser is installed, the backing material can be peeled away from the label as it is printed. After this label is removed, the next one is printed.
- Media Cutting: If a factory optional media cutter is installed, the printer can cut the label liner between labels, receipt paper or tag stock.
- Stand-alone: The printer can print without being directly connected to a computer. An auto running label format/form (programming based).
- Shared network printing: Printers configured with factory installed Ethernet (LAN) and Wi-Fi interface options include an internal print server.

What's in the Box?

After unpacking, make sure you have all parts shown below. Follow the procedures for inspecting the printer to familiarize yourself with printer parts so you can follow the instructions in this book.

Printer

USB Cable

Printer Documentation

Power Supply

Power Cord varies by locale or region

What is Not Included in the Box

Print Media

(Labels, Paper, etc.)

Unpack and Inspect the Printer

When you receive the printer, immediately unpack it and inspect for shipping damage.

- Save all packing materials.
- Check all exterior surfaces for damage.
- Open the printer and inspect the media compartment for damage to components.

If you discover shipping damage upon inspection:

- Immediately notify the shipping company and file a damage report. Zebra Technologies Corporation is not responsible for any damage to the printer incurred during shipment, and will not cover the repair of this damage under its warranty policy.
- Keep all packaging material for shipping company inspection.
- Notify your authorized Zebra® reseller.

See the Zebra Web site for 'How To' videos on packing and unpacking your printer. Use this link to get to your Online printer support resources:

ZD200 Series Direct Thermal Printer — www.zebra.com/zd200d-info

Opening and Closing the Printer

Open: To access the media compartment, pull the release latches towards you and lift the cover. Check the media compartment for loose or damaged components.

Close: Lower the top cover. Press down in the middle of the cover in front until the cover snaps closed.

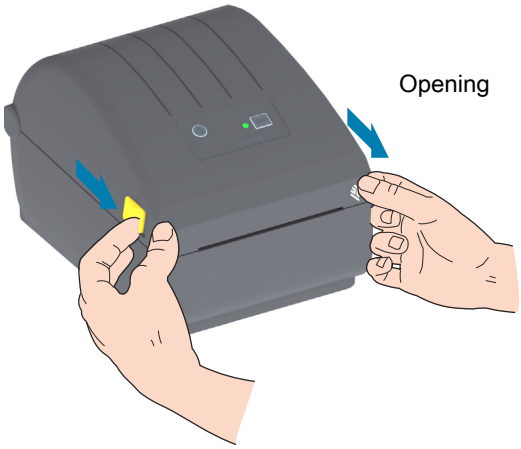

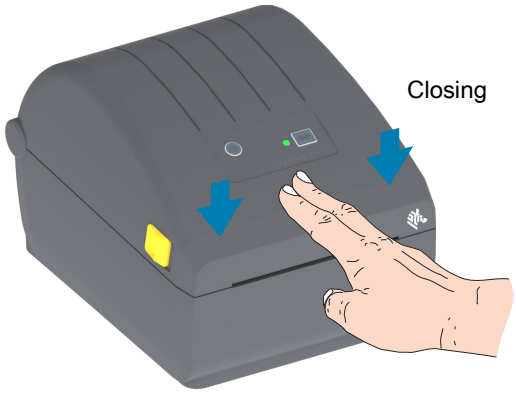

ESD Caution • The discharge of electrostatic energy that accumulates on the surface of the human body or other surfaces can damage or destroy the printhead and other electronic components used in this device. You must observe static-safe procedures when working with the printhead or the electronic components under the top cover.

Printer Features

This section will help you identify features of these Zebra® 4-inch ZD200 Series Direct Thermal label printers. ‘How to’ videos on the Zebra Web site include a Printer Features video; as well as; other printer setup and task specific videos. Links to these printers are:

- ZD200 Series Direct Thermal Printer — www.zebra.com/zd200d-info

External Printer Features

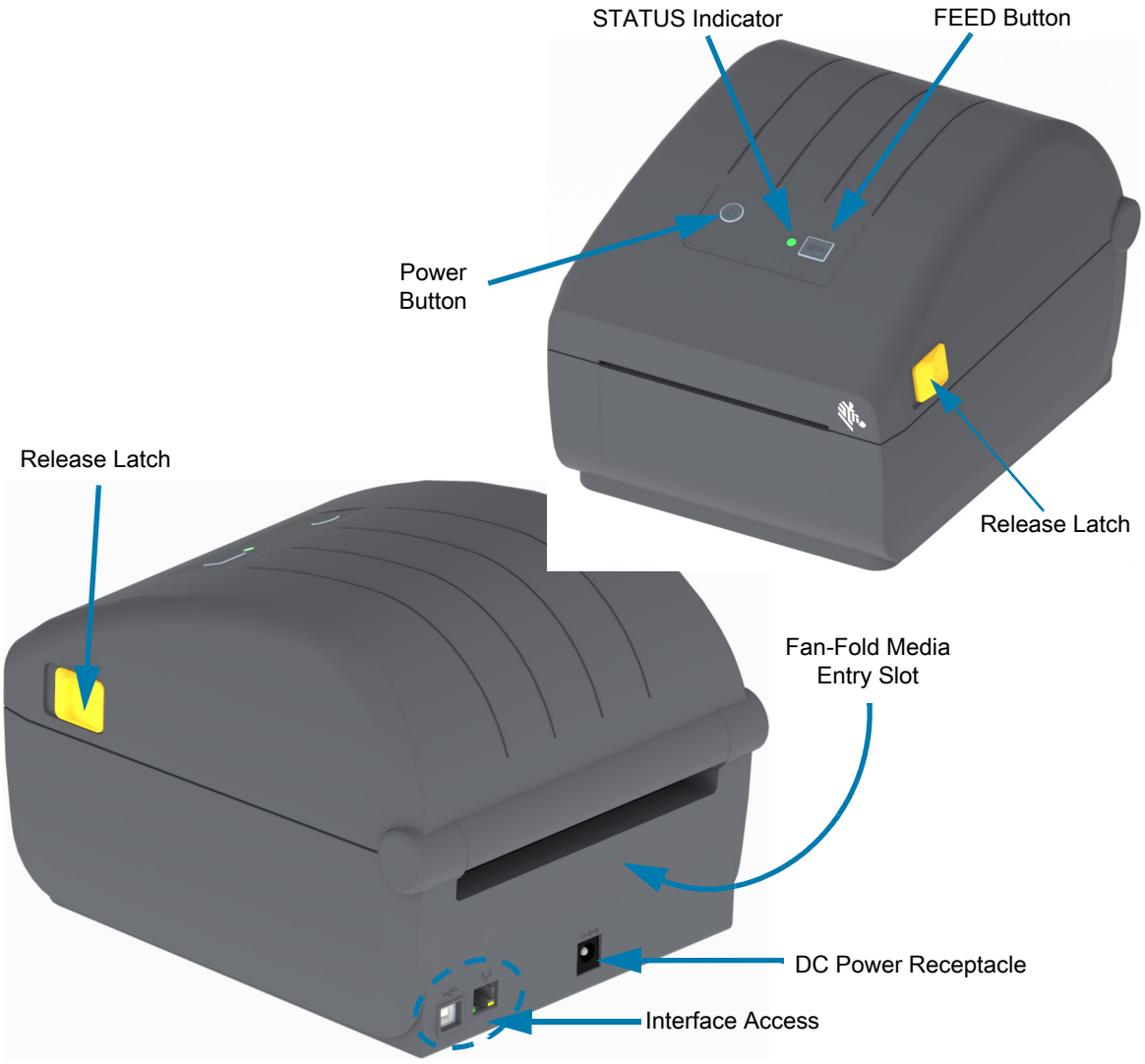

Inside the ZD200 Series Direct Thermal Printers

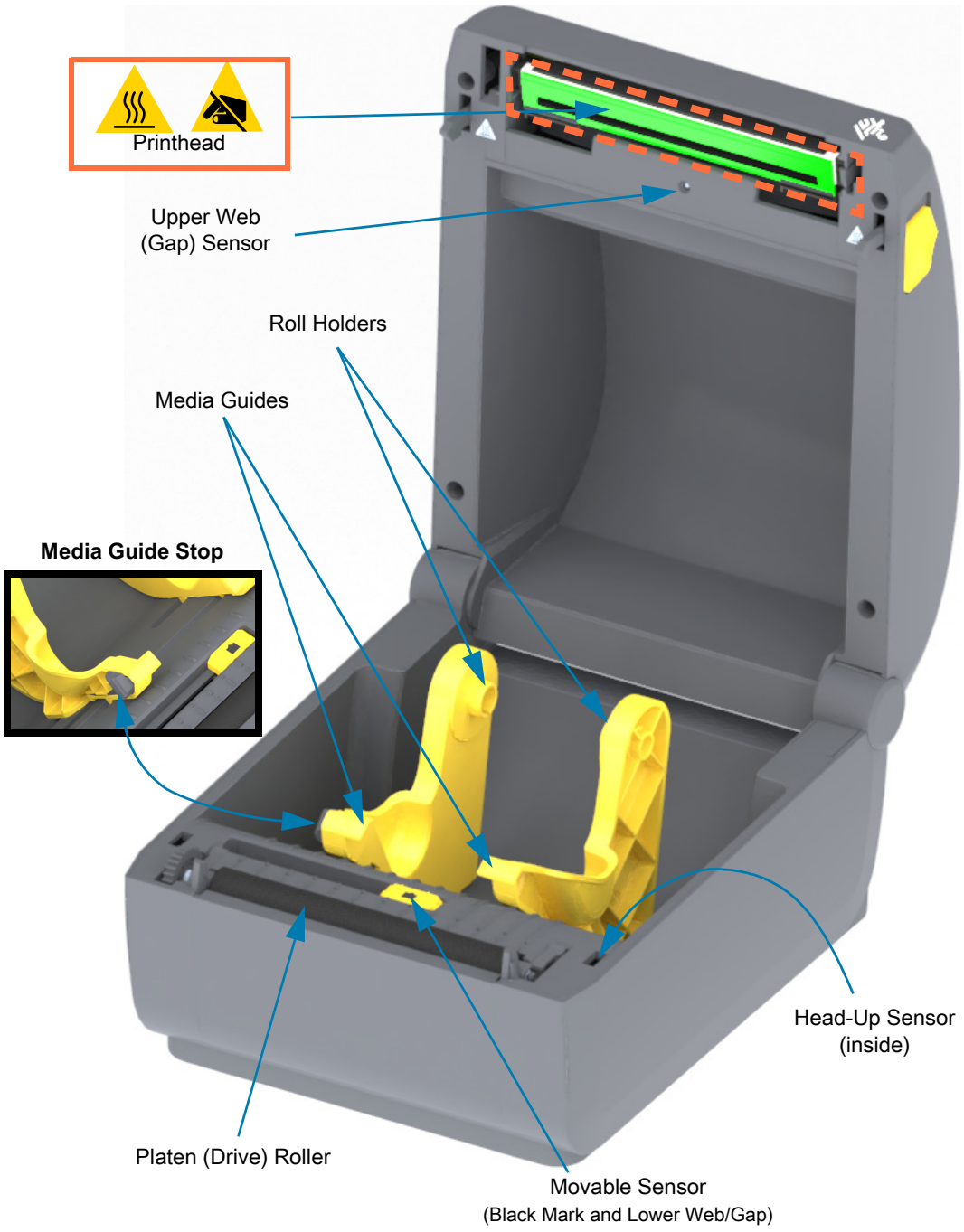

Label Dispenser Option (factory installed only)

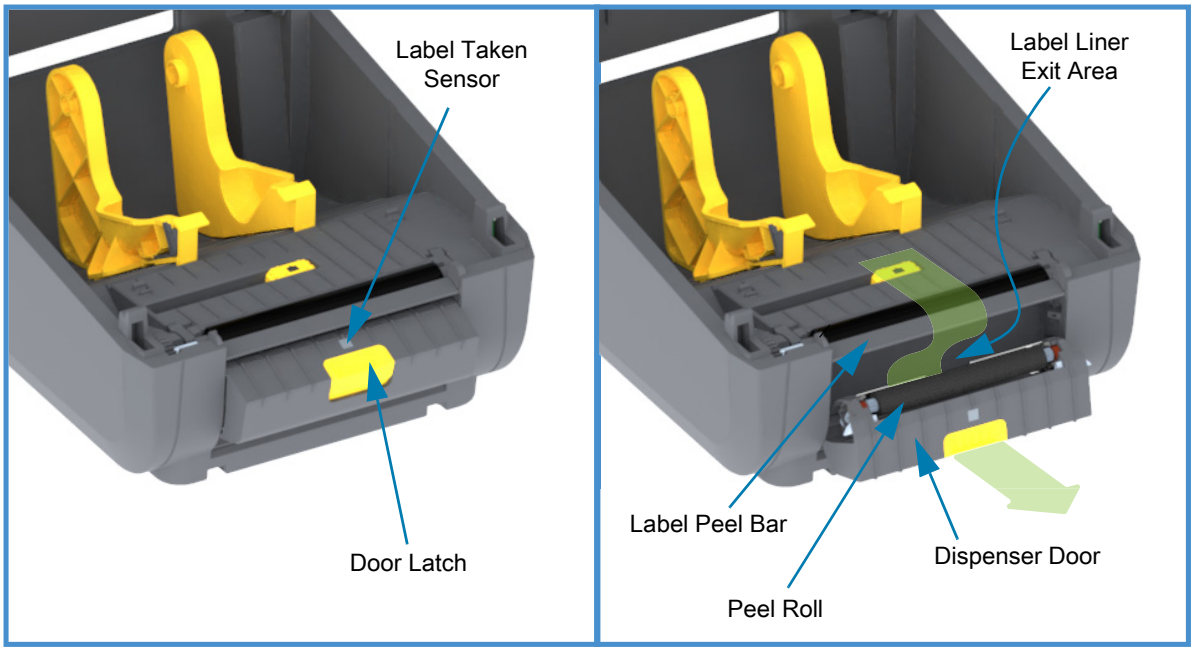

Cutter Option (factory installed only)

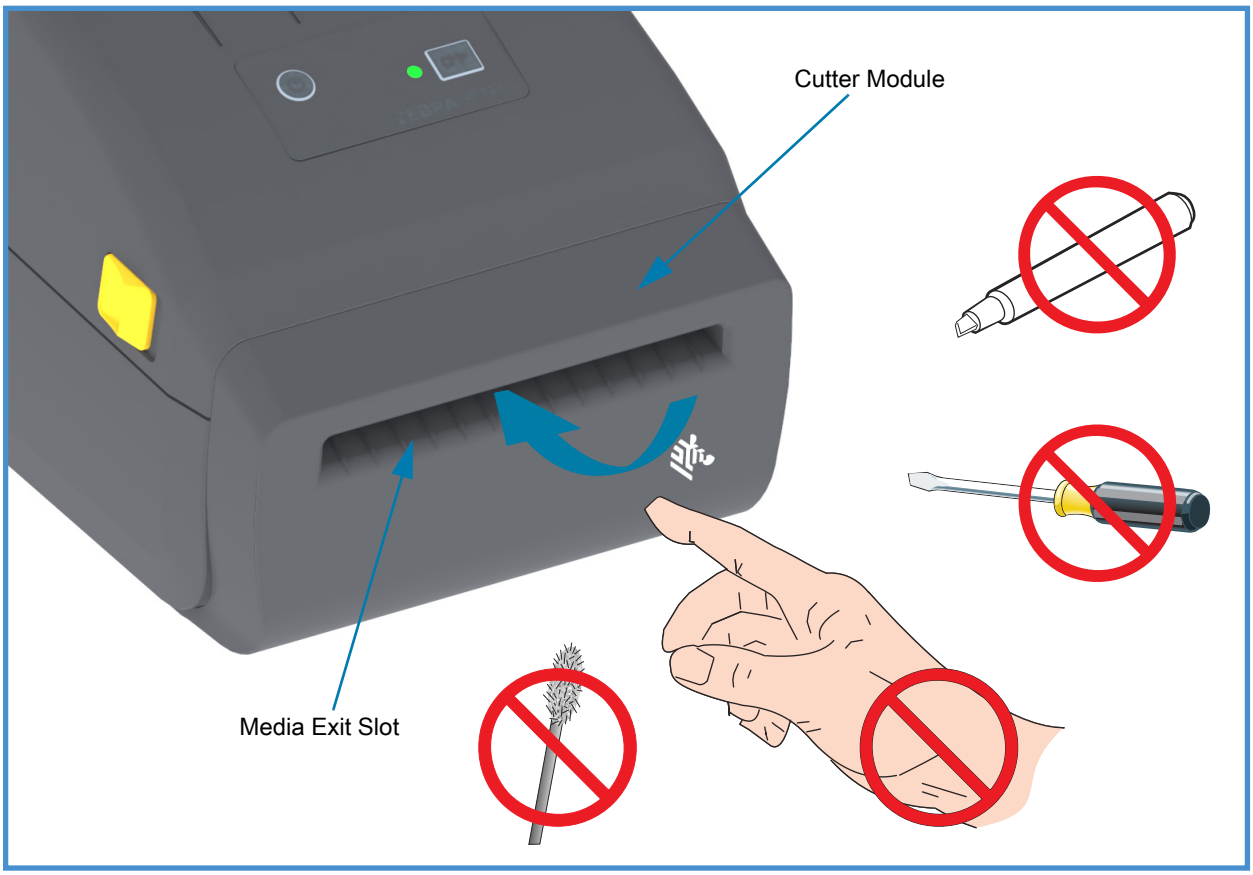

Controls and Indicators

User Interface

The user controls are found on the front on top of the printer. This interface provides basic control and status needed by an operator.

The interface consists of a Power button, a multi-function FEED button, and a single tri-color STATUS Indicator. The buttons are modal and change behaviors depending upon what the print is doing. Using the two (2) buttons and the STATUS Indicator light, an operator can perform a variety of functions, such as:

- Calibration of media (labels, paper, tags, etc.)
- Print a Configuration Report
- Reset the Printer Settings to Default Configuration
- Enter a 'Forced' firmware download mode.
- Enter and exit Diagnostic (Dump) Mode used to debug programming and printer communications.

Printer operating status is reported by a single indicator light. The STATUS Indicator light provides a range of printer status.

- This interface supports operator tasks of replacing printing supplies (labels, receipt paper, etc.).
- Status indicator lights typically use color to show the operator the functional status of the printer. The STATUS Indicator light may be Off (not lit), it can Flash (blink), or be ON.
  - **Red** is 'needs attention'.
  - **Green** is for 'ready' or 'functioning'.
  - **Amber** (orange/yellow) is for busy or active process (boot-up, over-temperature cooling cycle, etc.).
  - The STATUS Indicator can be blinking (off and on) and alternate between colors in a variety of patterns that denote various printer activities, and operational status.

User Interface Controls

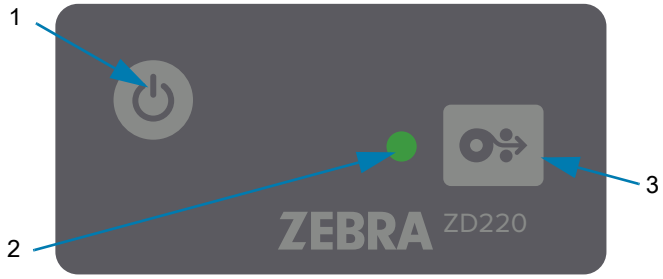

1. **Power Button** — Turns power ON and OFF in the printer.
   - **Power ON** — Press the Power button once for less than two (2) seconds and the printer turns on. The STATUS Indicator light will turn on Amber while the printer does self diagnostics, configuration checks, and integrate optional components which will take several seconds to complete.

     The Status Indicator will turn solid GREEN (or Flashing Green) indicating the printer is ready for normal print operations.
   - **Power OFF / Shutdown** — **Press and Hold the button for 4-9 seconds.** The printer will turn OFF.
2. **STATUS Indicator** — The STATUS Indicator for provides the operator basic printer health and operational status. This indicator is also serves as a power indicator. These are STATUS Indicator light behaviors for normal printer operation.

   - **Green** — **Printer Ready** for print and data activity.

   - **Flashing Green** — **Normal Operation**. Printer may be communicating or processing data.

   - **Double Flashing Green** (2 short flashes of green followed by a long green) — **Printer is Paused**.

   - **Flashing Red** — **Media Alert**. The printer is out of media (paper, labels, tags, etc.), media sensing failure, printer is open, or a cut error.

     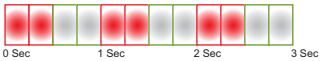

   - **Flashing Amber** — **Over Temp**. The printhead is over temperature and must cool to resume printing.

   - **Flashing Red, Red, Green** — **Critical Over Temp** (temperature) — The printhead or motor has failed.

3. **FEED (Advance) Button** — The FEED button is a multi-function button. With the printer ON, pressing the FEED button longer than two (2) seconds initializes the Power On FEED Button modes
   - **Feed One Label** — Pressing the FEED button [and releasing before two (2) seconds] when the printer is not printing, causes the printer to advance media one (1) blank form/format length (label, receipt, tag, ticket, etc.).
   - **Reprint Last Label** (activated via a SGD command: **`ezpl.reprint_mode`** or ZPL **`^JJ`** `command parameters` **`D`** `and` **`E`** use the FEED button as the 'applicator signal') - The intended purpose of this feature is to allow reprint of a failed media print. If the printer runs out of media (paper, labels, etc.), then the printer can re-print the last label (print form/format). The print buffer that stores the print image available for reprint is cleared when the printer gets turned off or is reset.
   - **Pressing the FEED button while printing** will stop print activities and place the printer into a 'Pause' state. The printer will complete printing a label that is printing before it pauses.
   - **Pressing the FEED button while in Pause state** will return the printer to normal operation of the first three. If printing a multi label (form/format) job or another print job is waiting to print in the print queue, then the printer will resume printing.

FEED Button Modes

The printer includes some advanced features that are accessed via the FEED button. The operator observes the STATUS Indicator light pattern changes to select each Advanced mode.

FEED Button Modes - Power ON

The Power ON advanced modes are designed to help with printer configuration and print setup. By pressing and holding the FEED button when the printer is ON and Ready (green STATUS Indicator) for two (2) seconds, the printer enters Advanced mode. These Advanced modes are:

- **Printing a Configuration Report** (One Single Flash)

  The STATUS Indicator flashes once. If you release the FEED button here, a Configuration Report prints and exits Advanced mode.
- **Media Calibration** (Two Flash) - Calibrates the printer for the installed media (labels, paper, tags, etc.) using Smart Cal routine to set media (label) sensing parameters

  Continue holding the FEED button, the STATUS Indicator will flash twice. If you release the FEED button here, the printer begins measuring media and then setting the start of the media position and exits Advanced mode.
- **Reset Factory Defaults** (Three Flash) - Resets the printer to the factory default settings.

  Continue holding the FEED button, the STATUS Indicator will flash three times. If you release the FEED button here, the printer Resets to Factory Defaults (the equivalent of the ZPL `^JUN` command) and exits Advanced mode.
- **Return to normal operating mode.** Release the FEED Button two (2) or more seconds after the third flash sequence.

FEED Button Modes - Power OFF

The Power OFF advanced modes are used to update and troubleshoot the printer. By pressing and holding the FEED button when the printer is turned ON, the printer enters Forced Firmware Download mode.

Load a roll of media for printing.

- **Forced Download Mode**

Waiting

Data Transferring

Booting Up

Ready - Firmware Updated

The STATUS Indicator alternates Amber and Red. If you release the FEED button here, the printer begins waiting for data to begin download (of the printer firmware file).

Your printer firmware may be configured to calibrate to the installed media and print a Configuration Report.

- **Begin Normal Printer Bootup**

Continuing to hold the FEED Button for three (3) seconds the STATUS Indicator turns Amber, releasing the FEED button here allows the printer to boot-up normally.

Booting Up

Ready

- **Enter Data Diagnostics Mode**

Continuing to hold the FEED Button for three (3) or more seconds the printer boot-up into Diagnostic (Hex Data Dump). The FEED Button may be released at anytime after the three (3) seconds.

The printer prints:

```
**********************
 * Entering Diag Mode *
**********************
```

- **Return to normal operating mode.** Release the FEED Button two (2) or more seconds after the leaving the Data Diagnostic Mode or simply hold the FEED button down for five (5) or more seconds after the STATUS indicator is green.

Setup

This section assists you in setting up and operating your printer. The setup process can be broken down into two (2) phases: hardware setup and host system (software/driver) setup. This section covers the physical hardware setup needed to print your first label.

Printer Setup Overview

- Place the printer in a safe location with access to power and where you can connect interface cables or wirelessly to the system.
- Attach the printer and power supply to a grounded AC power source.
- Select and prepare media for your printer.
- Load the media.
- Turn the printer ON. Calibrate the media with a SmartCal Media calibration.
- Print a 'Configuration Report' to verify basic printer operation.
- Turn the printer OFF.
- Choose a method to communicate via a wired or wireless connection to your printer. Available wired local connections are:
  - USB port
  - Factory Installed Ethernet (LAN) Option
- Attach the printer cable to the network or host system (printer OFF).
- Begin second phase of printer setup: typically Setup for Windows® OS.

Select a Location for the Printer

The printer and media need a clean safe area with moderate temperatures to have optimal print operations.

Select a location for the printer that meets these conditions:

- **Surface:** The surface where the printer will be located must be solid, level, and of sufficient size and strength to hold the printer with media.
- **Space:** The area where the printer will be located must include enough space for opening the printer (media access and cleaning), and for printer access to connectivity and power cords. To allow for proper ventilation and cooling, leave open space on all sides of the printer.

Important • Do not place any padding or cushioning material under or around the base of the printer because this restricts air flow and could cause the printer to overheat.

- **Power:** Put the printer close to an easily accessible power outlet.
- **Data Communication Interfaces:** Please ensure that cabling and Wi-Fi or Bluetooth radios do not exceed the maximum distance specified by the communication protocol standard or product data sheet for this printer. Radio signal strength can be reduced by physical barriers (objects, walls, etc.).
- **Data Cables**: Cables should not be routed with or near power cords or conduits, fluorescent lighting, transformers, microwave ovens, motors or other sources of electrical noise and interference. These interference sources may cause problems with communications, host system operation, and printer functionality.
- **Operating Conditions:** Your printer is designed to function in a wide range of environments.
  - **Operational Temperature:** 40° to 105°F (5° to 41°C)
  - **Operational Humidity:** 10 to 90% non-condensing
  - **Non-Operational Temperature:** -40° to 140°F (-40° to 60°C)
  - **Non-Operational Humidity:** 5 to 85% non-condensing

Attaching Power

Caution • Never operate the printer and power supply in an area where they can get wet. Serious personal injury could result!

Note • Set up your printer so that you can handle the power cord easily if needed. Some processes for setup or troubleshooting issues may ask you to remove power. Separate the power cord from the power supply receptacle or AC electrical outlet to make certain the printer cannot carry electrical current.

1. Plug the power supply into the printer's DC power receptacle.
2. Insert the AC power cord into the power supply.
3. Plug the other end of the AC power cord into an appropriate AC electrical outlet. Note that AC outlet end of the power cord's plug type can vary by region.
4. The active power light will turn on green if power is on at the AC outlet.

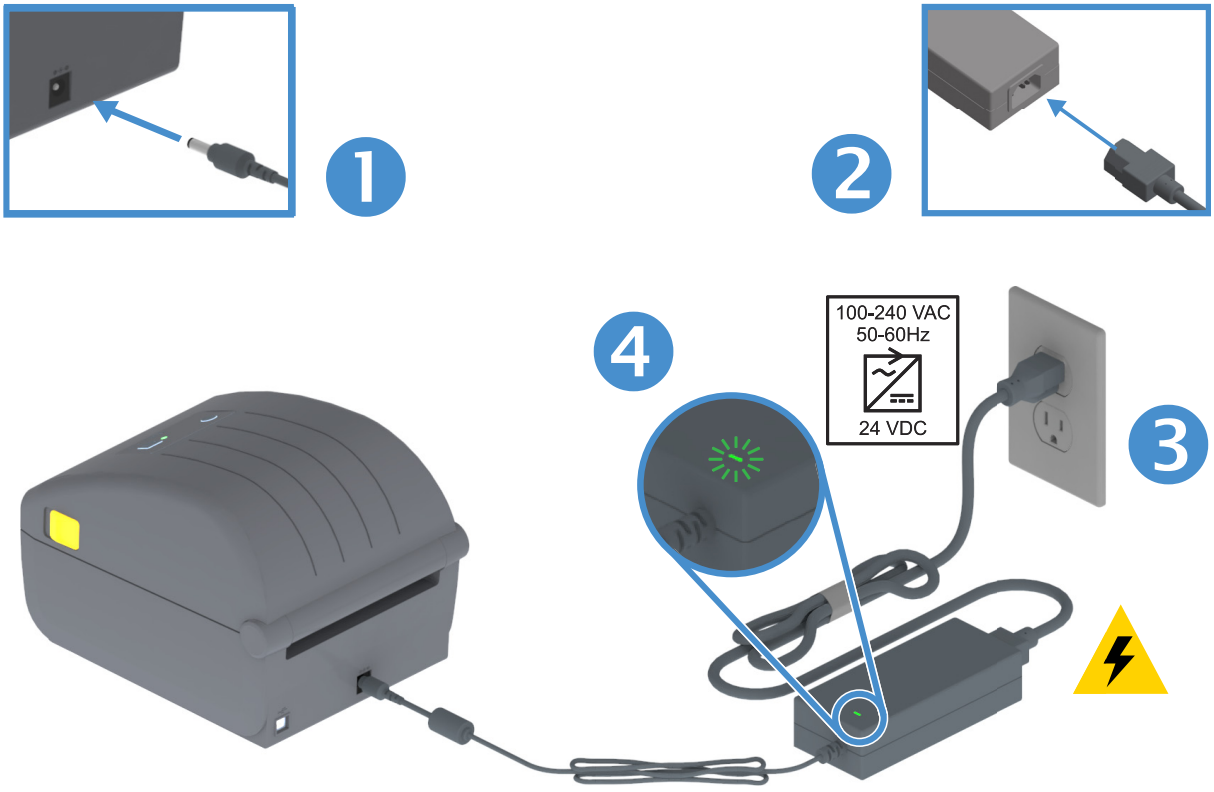

Important • Ensure the appropriate power cord with a three (3) prong plug and an IEC 60320-C13 connector are used at all times. These power cords must bear the relevant certification mark of the country in which the product is being used.

Getting Ready to Print

The printer setup cannot be completed without media. The media may be labels, tags, tickets, receipt paper, fan-fold stacks, tamper proof labels, etc. Ideally choose the same media used for normal operation. This will help you identify any setup and real application issues while using this guide. The printer does not come with media.

The Zebra Web site or your reseller may be able to help you select the right media for your intended printing application. Find media at: www.zebra.com/supplies

Preparing and Handling Media

Careful handing and storage of your media is important in order to maximize print quality. If the media becomes contaminated or dirty, it can damage the printer and cause defects in the printed image (voids, streaks, discoloration, compromise the adhesive, etc.).

Important • During manufacturing, packaging, handling and storage, the outside length of media may become dirty or contaminated. We recommend removing the outside layer of the media roll or stack. This will remove any contaminants which might be transferred onto the printhead during normal operation.

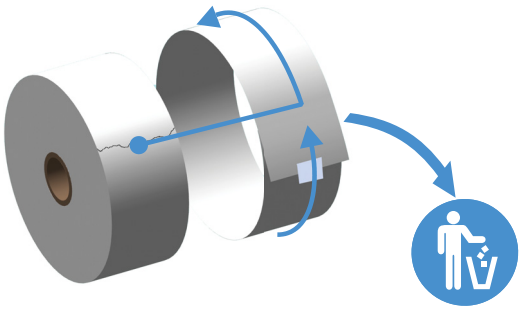

Media Storage Tips

- Store media in a clean, dry, cool, dark area. Direct thermal media is chemically treated to be heat sensitive. Direct sunlight or heat sources may ‘expose’ the media.
- Do not store media with chemicals or cleaning products.
- Leave media in its protective packaging until it is going to be put in the printer.
- Many media types and label adhesives have a ‘shelf life’ or expiration date. Always use the oldest, viable (non-expired) media first.

Loading Roll Media

The printers support the three basic types of media:

- **Continuous** (receipt, etc.) with no marks to define print length,
- **Marked media** (black lines, black marks, notches, or holes) to define print length
- **Label media** that uses the sensor to look through the media backing (liner) to see the beginning and end of labels on the roll.

The printer utilizes two (2) sensing methods to accommodate a wide range of media

- Center area transmissive sensing for continuous media and gap/web label media.
- Half width movable (reflective) sensing for print format (length) using black marks, black lines, notches or holes.

Setting Media Sensing by Media type

- **For web/gap media**, the printer senses the differences between the label and the liner to determine the print format length.
- **For continuous roll media**, the printer only senses the media's characteristics. The print format's length is set by programming (driver or software) or the last stored form's length.
- **For black mark media**, the printer senses the beginning of the mark and the distance to the start of the next black mark to measure the print format length.
- **For other common media and setting variations**, see one of the following:
  - Using the Label Dispenser Option after you have loaded media using this procedure.
  - See Printing on Fan-Fold Media.

Instructions for media loading:

This procedure works for Tear-Off (standard bezel), Label Dispense and Media Cutting printer options.

1. Open the printer. Pull the release latch levers toward the front of the printer.

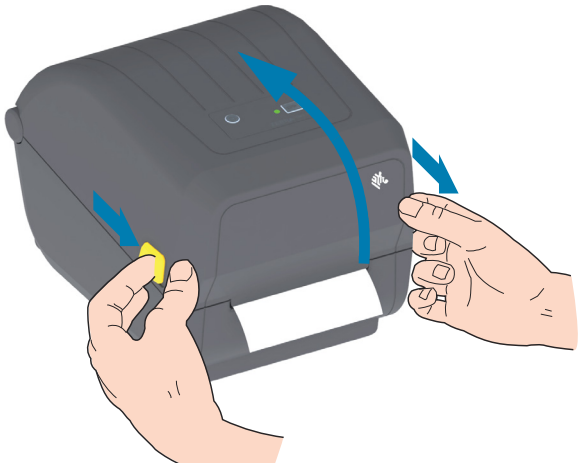

2. Open the media roll holders. Orient the media roll so that its printing surface will face up as it passes over the platen (drive) roller. Pull the media guides open with your free hand and place the media roll on the roll holders and release the guides. Verify the roll turns freely. The roll must not sit in the bottom of the media compartment.

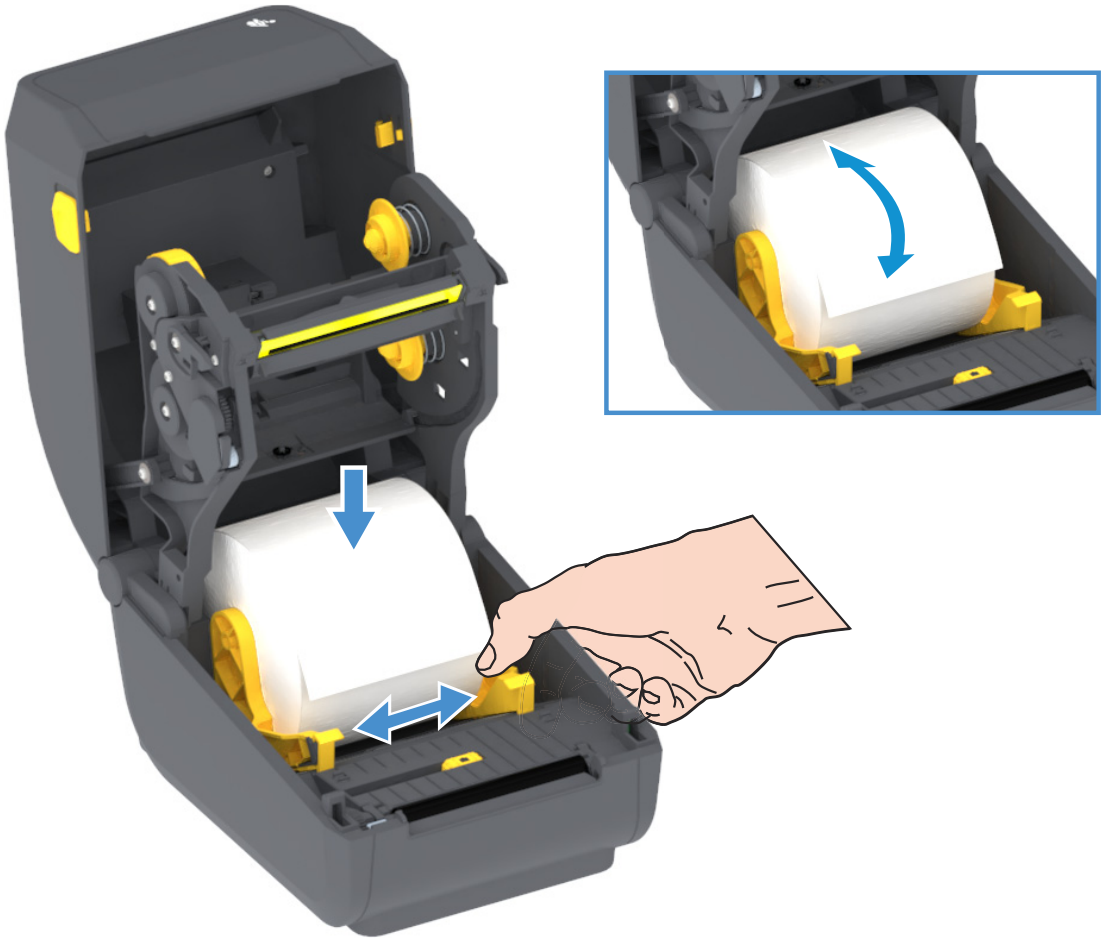

3. Pull the media so that it extends out of the front of the printer.

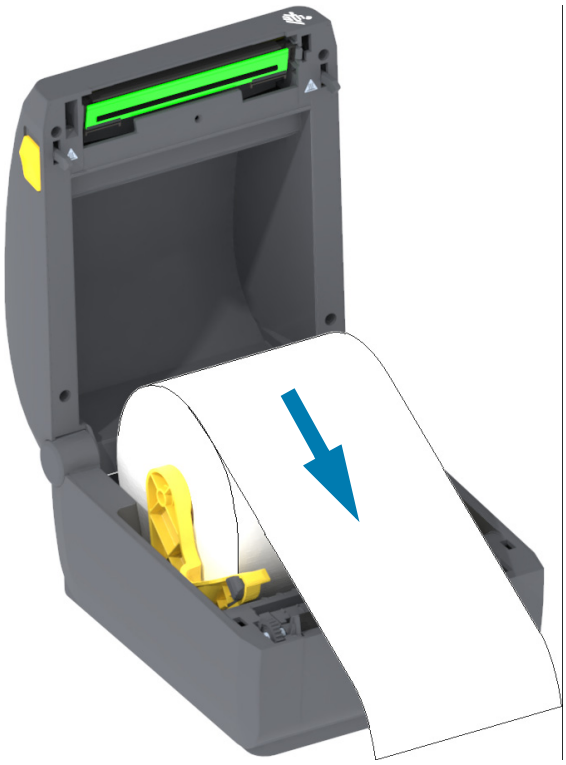

4. Push the media under both of the media guides.

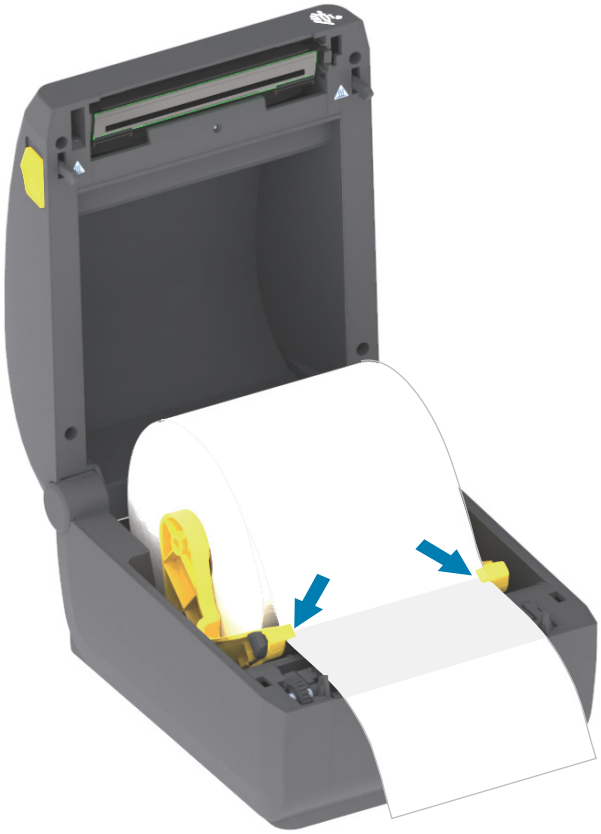

5. Flip the media up and align the movable media sensor for your media type.
    - **For continuous roll receipt type media or label media** without black marks or notches, align the media to the default center position.
    - **For black mark (black line, notches or holes) backed media**, adjust the sensor position so the sensor aligns to the center of the black mark. Avoid the center area of the media to only use black mark sensing for operation with black marks.

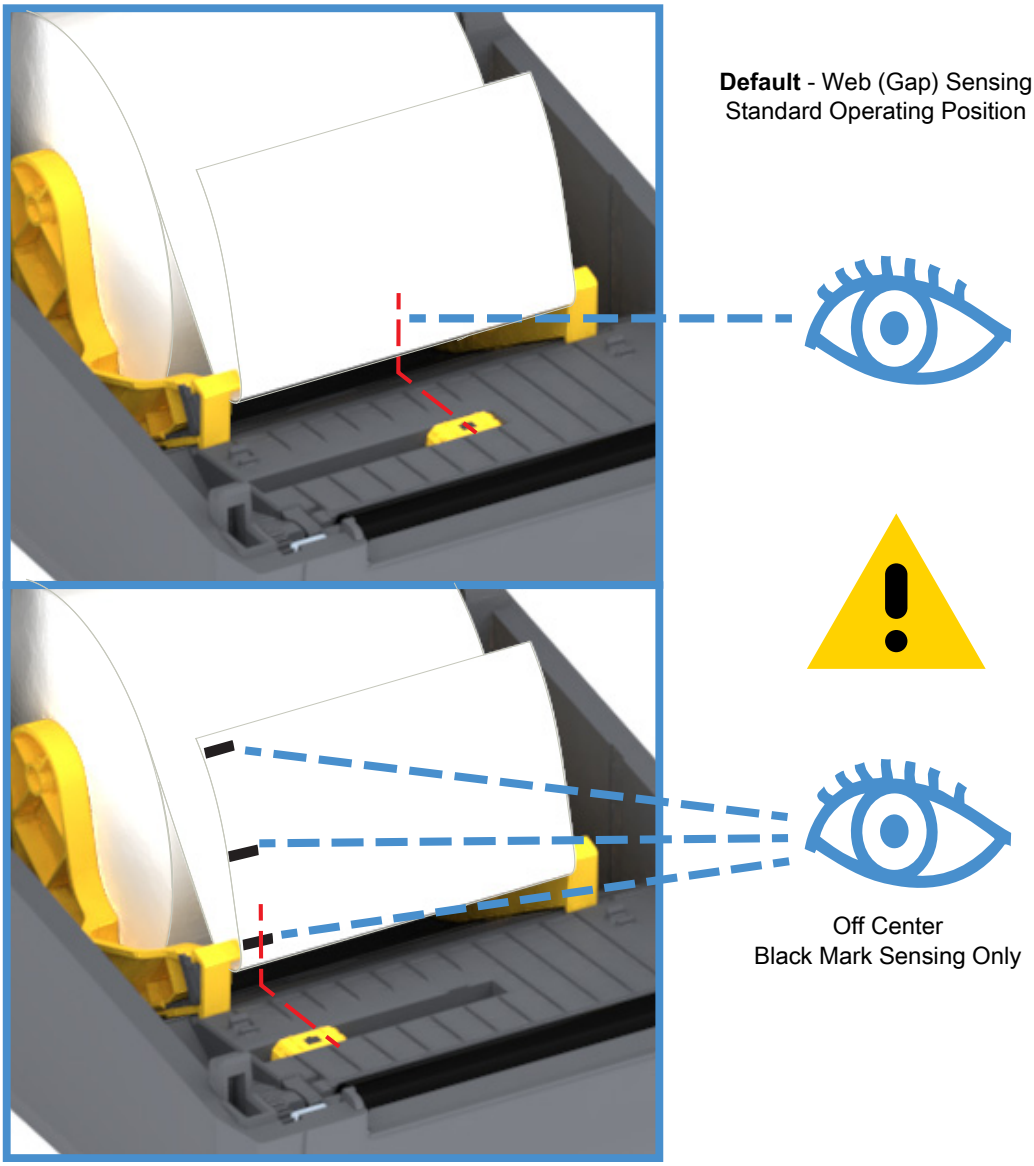

Using the Movable Sensor

The movable sensor is a dual function sensor. It provides transmissive (sees through media) and reflective media sensing. The printer can use either sensing method, but not both at the same time.

The movable sensor has single sensor position for Web/Gap media, the **Default** position.

The movable sensor allows the printer to use media with **black marks** or **notches** (holes through the media) on the back side of the media (or media liner). The sensor aligns to the middle of black marks or notches not in the center of the media roll to avoid Web/Gap sensing array.

Adjusting the Movable Sensor for Black Marks or Notches

The black mark sensing looks for non-reflective surfaces such as black marks, black lines, notches or holes on the back of the media which do not reflect the sensor's near infrared light beam back to the sensor's detector. The sensor light and its black mark detector are next to each other under the sensor cover.

Position the movable sensor's alignment arrow to the middle of the black mark or notch in the underside of the media. Sensor alignment should be set as far as possible from the edge of media but where 100% of the sensor window is covered by the mark. When printing, the media can move from side to side ±1mm (due to media variations and edge damage due to handling). Notches cut into the side of the media can also become damaged.

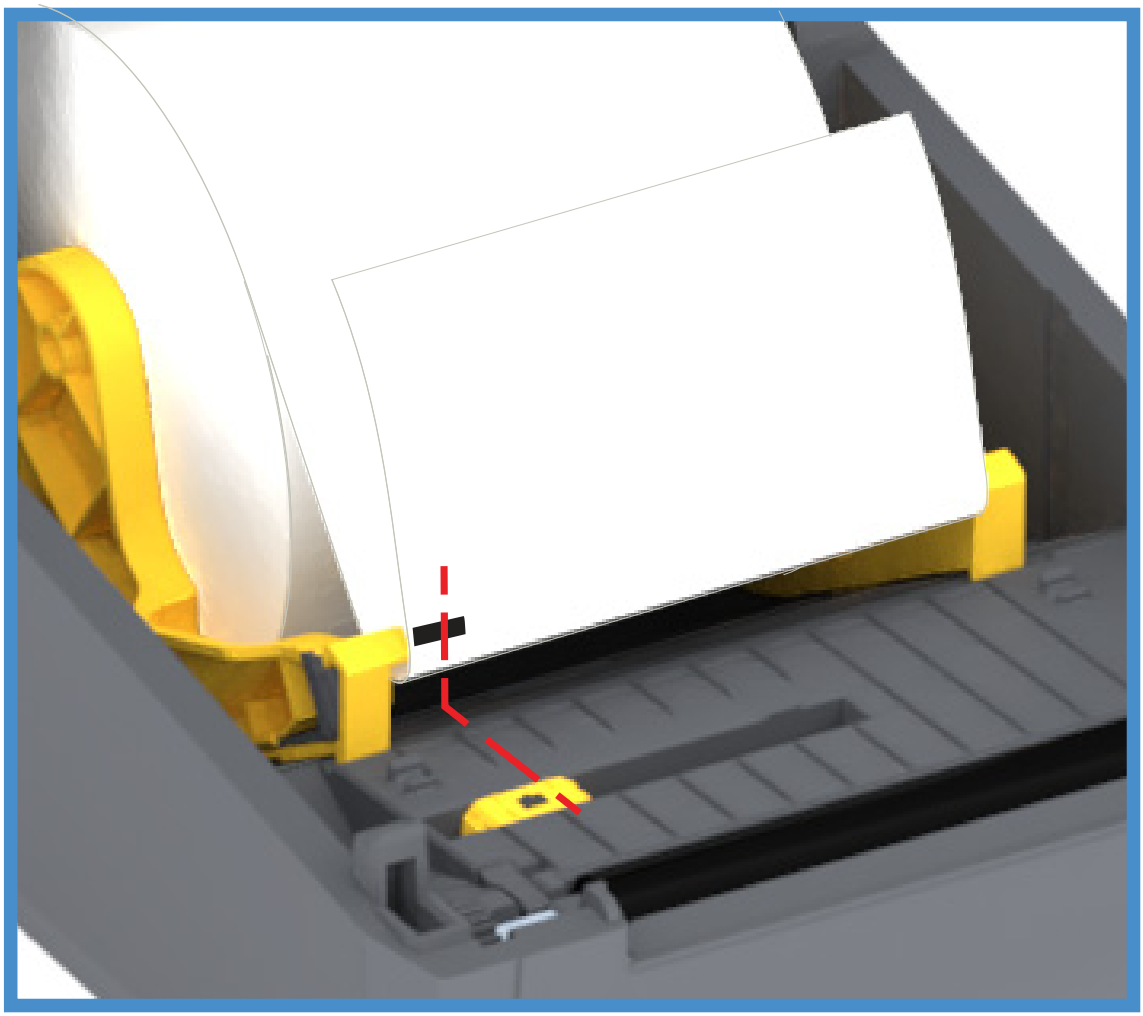

Loading Roll Media (continued)

1. **Cutter Models** - For printers with the optional cutter module installed, thread the media through cutter's media slot and pull it out the front of the printer.

2. Close the printer. Press down until the cover snaps closed.

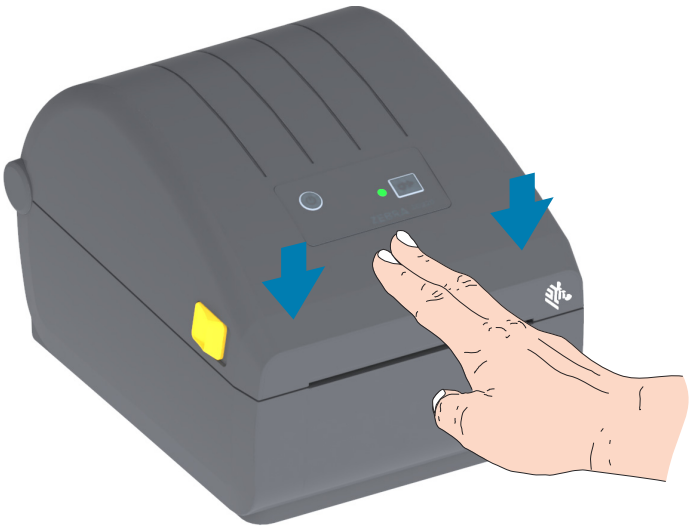

You may need a calibrate your printer for the media. The printer's sensors need to adjust to sense the label, the liner, and the distance between labels to operate properly. When reloading the same media (size, vendor, and batch), you can just press the FEED (Advance) button once to prepare the media for printing.

Run a SmartCal Media Calibration

The printer needs to set the media parameters prior to printing for optimal operation. The printer will automatically determine media type (web/gap, black mark/notch, or continuous) and measure media characteristics.

Important • After the initial calibration to a specific media is completed, it is not required to perform additional calibrations each time the media is replaced. The printer automatically measures the media to adjust for small changes in the media characteristics while printing.

Pressing the FEED (Advance) button once or twice after a new roll (from the same batch) of media has been installed, will synchronize the labels. It is then ready to continue printing.

SmartCal Procedure

1. Make sure the media is loaded properly in the printer and the top cover of the printer is closed.
2. Press the POWER button to turn the printer on.
3. Once the printer is in the Ready state (STATUS Indicator is solid green), press and hold the FEED button for two (2) seconds and the STATUS Indicator flashes the first time. Continue to hold the FEED button until it has flashed 2 more times and immediately release the FEED button.
4. The printer will measure a few labels and adjust media sensing levels.
5. When the printer stops, the STATUS indicator will turn solid green.

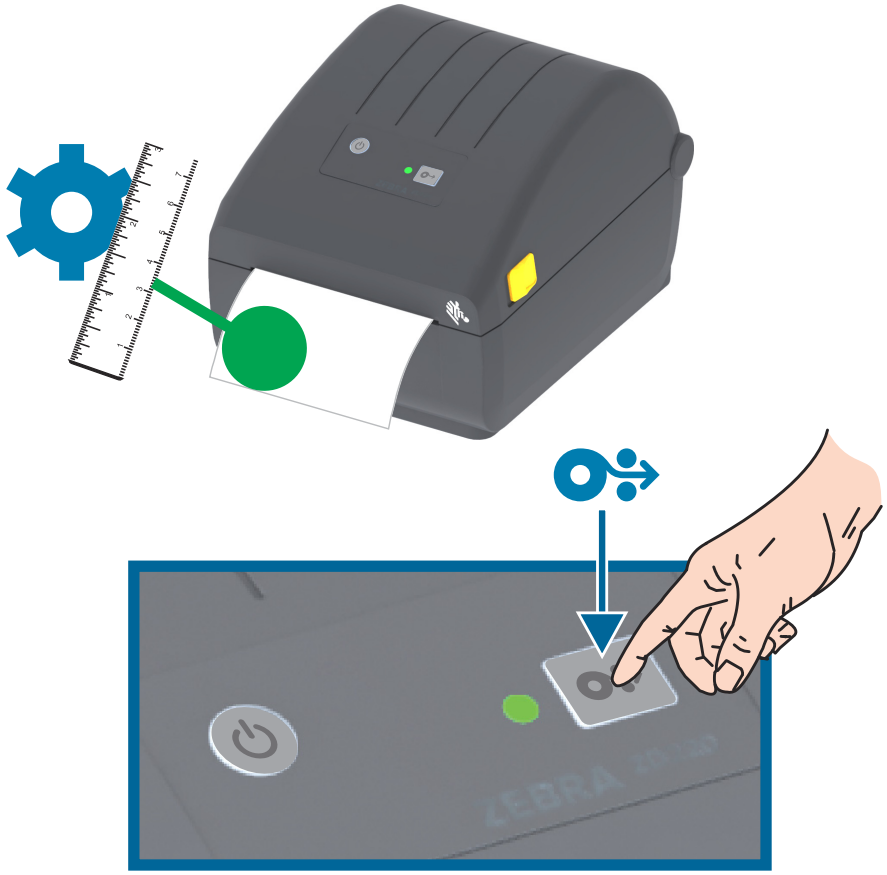

Test Printing with the Configuration Report

Before you connect the printer to a computer, make sure that the printer is in proper working order. You can do this by printing a configuration report. The information on the Configuration Report's printout may be helpful with printer installation and troubleshooting of your printer.

1. Make sure the media is loaded properly in the printer and the top cover of the printer is closed.
2. Turn the printer ON.
3. Once the printer is in the ready state (STATUS indicator is solid green), press and hold the FEED button for approximately two (2) seconds and the STATUS Indicator blinks off once and release.
4. The Printer and Network Configuration Reports (shown below) will be printed.
5. When the printer stops, the STATUS Indicator will turn solid green.

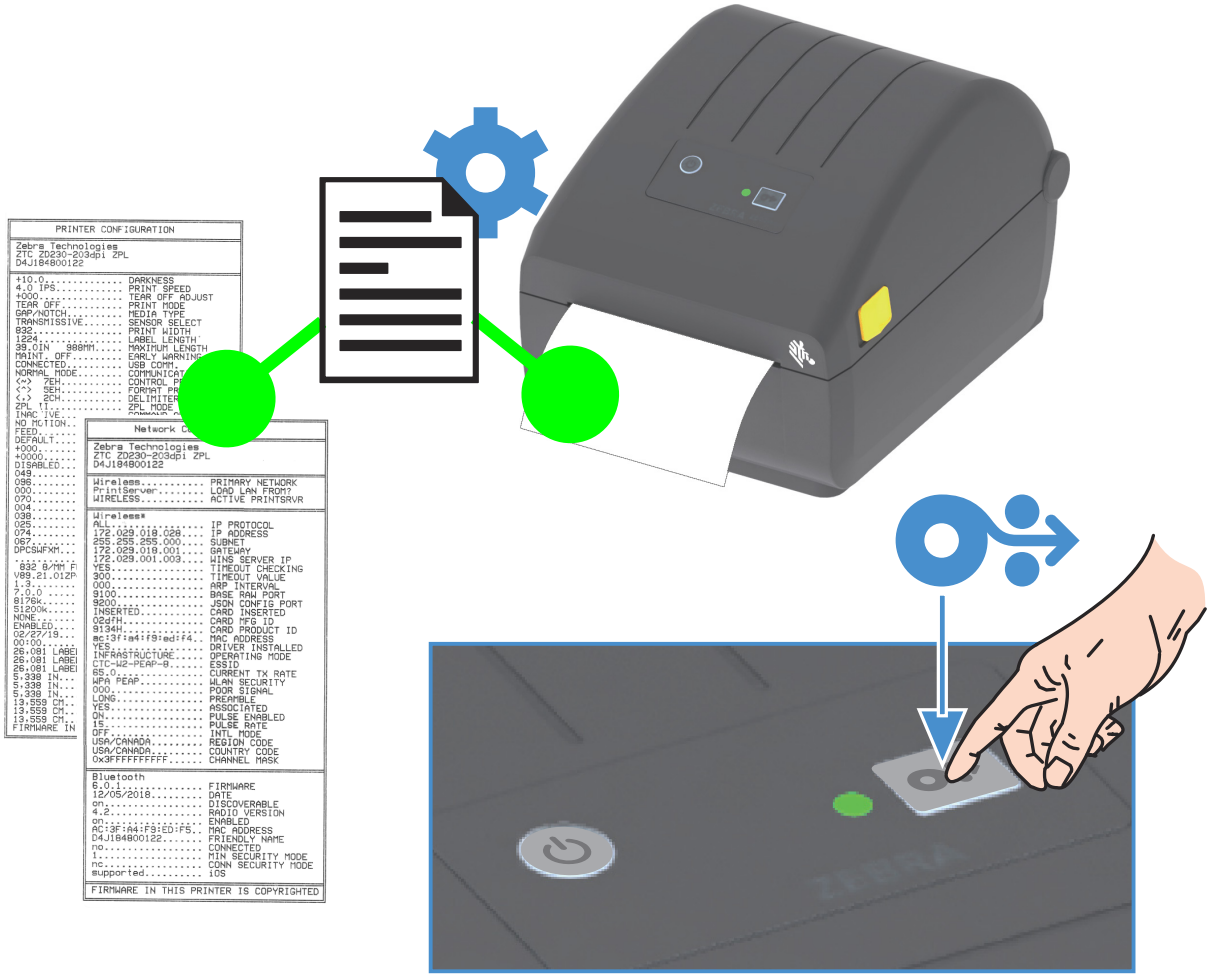

If you cannot get these reports to print, then see Troubleshooting.

Detecting a Media Out Condition

When you run out of media, your printer will report a 'Media Out' condition with the STATUS Indicator flashing red. This is part of the normal media usage cycle.

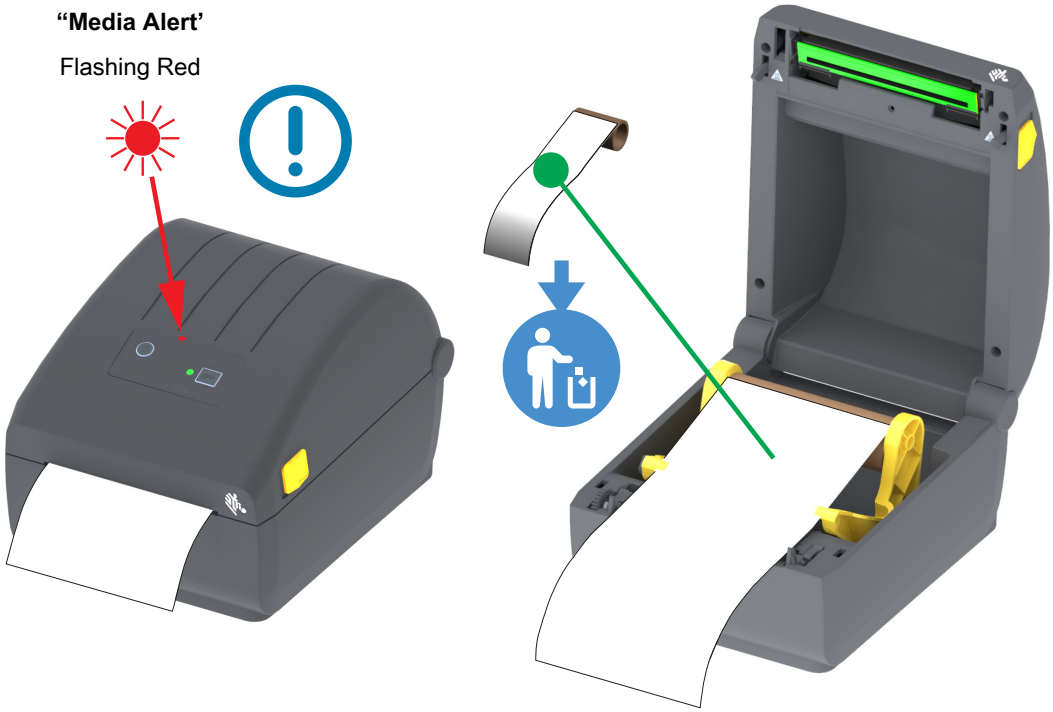

Recovering from a Media Out condition

1. Open the printer.
2. Observe that the media is at the end or nearly at the end of the roll with a label missing from the liner.
3. Remove the remaining media and roll core.
4. Insert a new roll of media. See Loading Roll Media.
    - If you are installing more of the same media, just load the new media and press the FEED (Advance) button once to resume printing.
    - If you are loading different media (size, vendor, or even batch is different), then reloading media followed by a SmartCal is needed to ensure optimal operation.
    - Note that changing media size (length or width) usually requires you to change the programmed media dimensions or the active label format in the printer.

Important • Sometimes a label may be missing some where in the middle of your roll of labels (not at the end of media). This will also cause a 'Media Out" condition. To recover, just pull the media past the missing label until the next label is over the platen roller. Close the printer. Press the FEED (Advance) button once. The printer will resynchronize the label position and will be ready to resume printing.

Connecting your Printer to a Computer

The printer supports a variety of interface options and configurations. These include:

- Universal Serial Bus (USB 2.0) interface - Standard.
- Ethernet (LAN) - Factory Installed Option.
- Internal Wi-Fi (802.11ac) and Bluetooth Classic 4.1 (3.0 Compatible) - Factory Installed Option.
  - WiFi models include Bluetooth Low Energy (low speed connection) for printer configuration using software running on an Android or iOS device.

Pre-install Windows® Printer Drivers

Install the Zebra Setup Utilities (ZSU) before applying power to the printer connected to the PC. The utility installs the Zebra Windows drivers first. The ZSU installation wizard will then prompt you turn on the printer. Follow the instructions to complete your printer installation.

The Zebra Setup Utility is designed to assist you with installing your printer. The cabling and unique parameters for each of these physical printer communication interfaces is discussed in the following pages to assist you with making configuration setup choices prior to and immediately following applying power. The Zebra Setup Utilities configuration wizards will instruct you to turn the printer's power on at the appropriate time to complete the installation of your printer.

For more details on configuring network (Ethernet or Wi-Fi) and Bluetooth communication, see the following guides:

- Wired and Wireless Print Server User Guide
- Bluetooth Wireless Guide

Interface Cable Requirements

Data cables must be of fully shielded construction and fitted with metal or metalized connector shells. Shielded cables and connectors are required to prevent radiation and reception of electrical noise.

To minimize electrical noise pickup in the cable:

- Keep data cables as short as possible (1.83 m [6 foot] recommended).
- Do not tightly bundle the data cables with power cords.
- Do not tie the data cables to power wire conduits.

Important • This printer complies with FCC "Rules and Regulations," Part 15, for Class B Equipment, using fully shielded data cables. Use of un-shielded cables may increase radiated emissions above the Class B limits.

USB Interface

Universal Serial Bus (version 2.0 compliant) provides a fast interface that is compatible with your existing PC hardware. USB's "plug and play" design makes installation easy. Multiple printers can share a single USB port/hub.

When using a USB cable, verify that the cable or cable packaging bears the "Certified USB ™ " mark (see below) to guarantee USB 2.0 compliance.

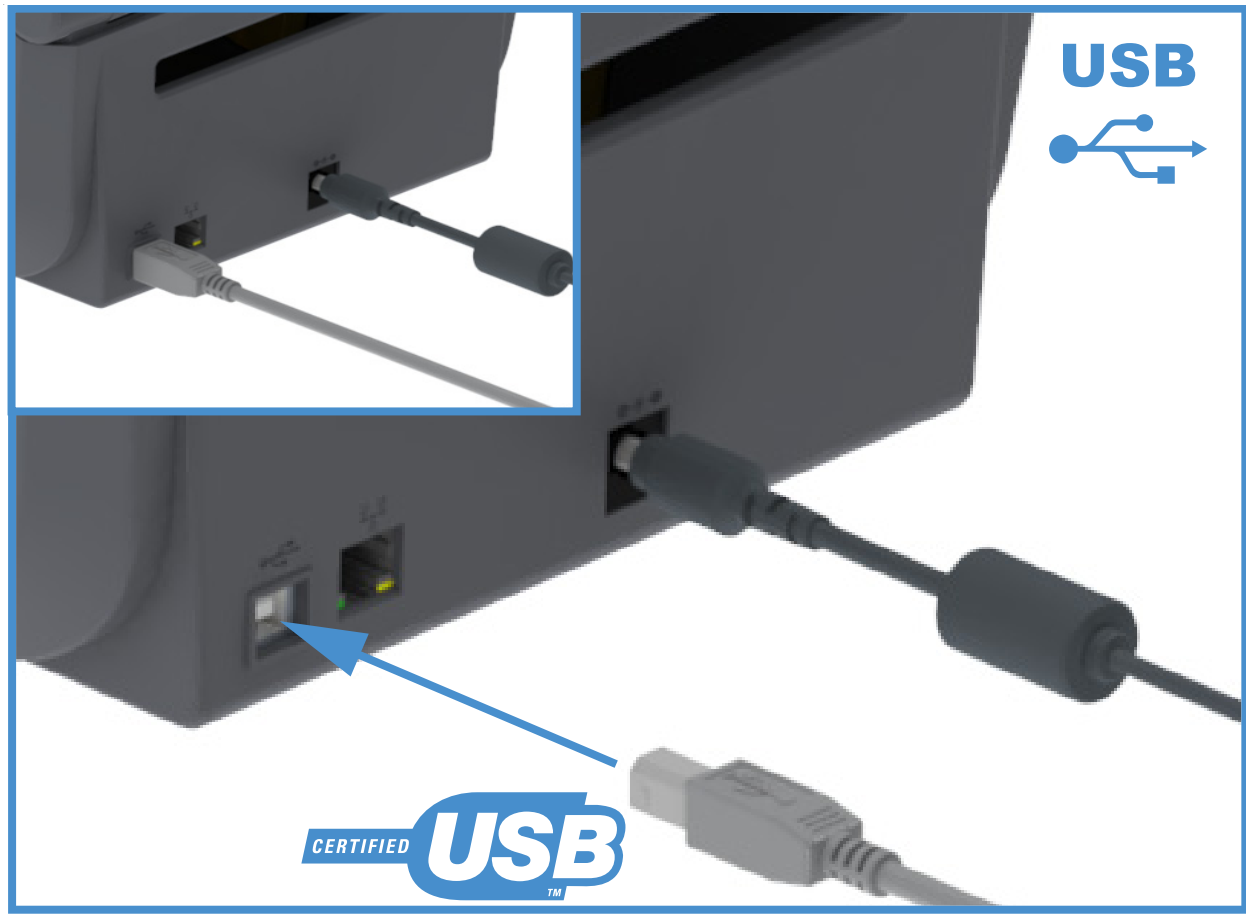

Ethernet (LAN, RJ-45)

The printer requires UTP RJ45 Ethernet cable rated CAT-5 or better.

The printer has a built-in network print server. For more information on configuring your printer to run on a compatible Ethernet based network, see the Wired and Wireless Print Server users guide. The printer must be configured to run on your network. The print server on board your printer can be accessed through the printer's print server Web pages.

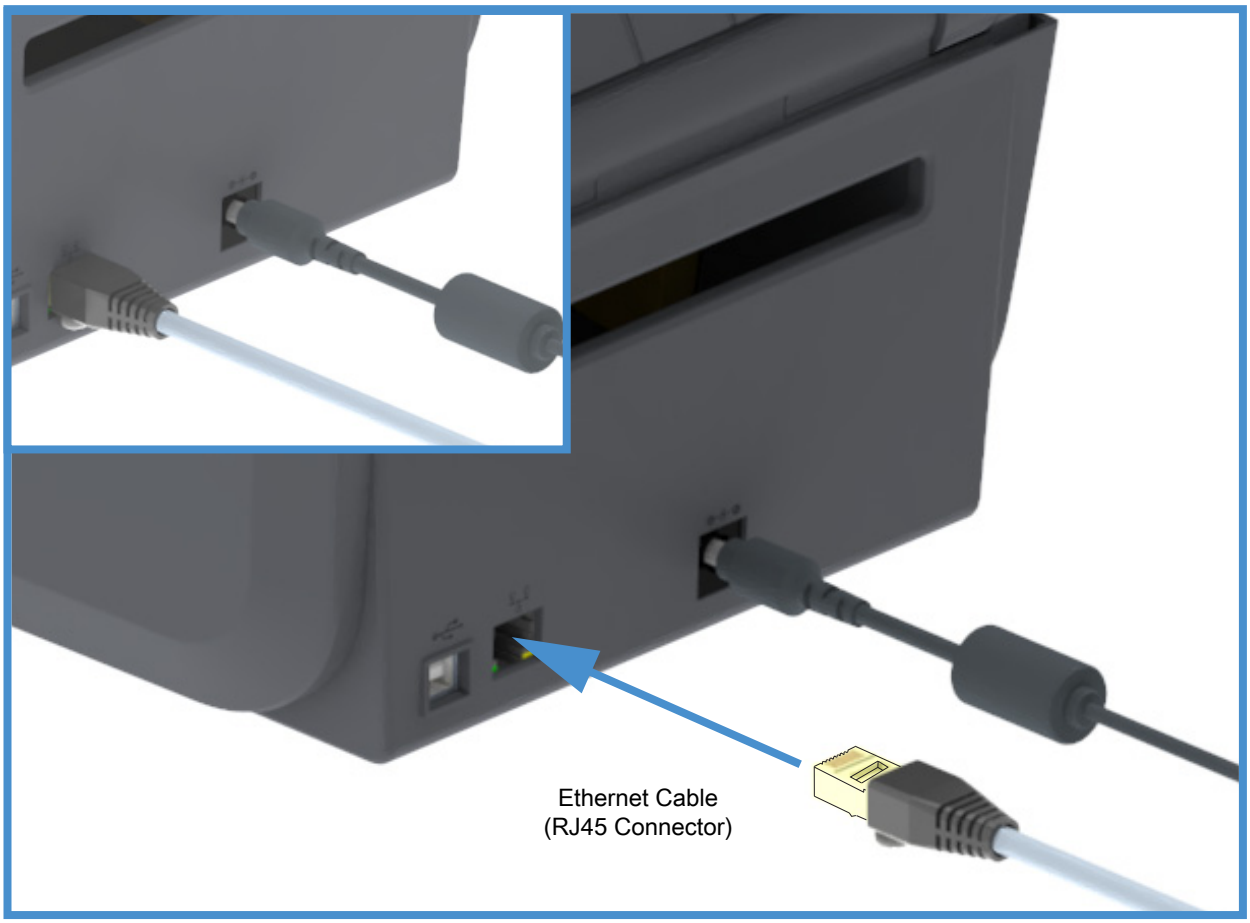

Ethernet Status/Activity Indicators

The Ethernet connector on the printer has two (2) status/activity indicators that are partially visible to provide interface status at the connector.

LED Status	Description
Both OFF	No Ethernet link detected
Green	100 Mbps link detected
Green with the Amber flashing	100 Mbps link and Ethernet activity detected
Amber	10 Mbps link detected
Amber with the Green flashing	10 Mbps link and Ethernet activity detected

Assigning an IP Address for Network Access

All devices on an Ethernet network (LAN and WLAN) require a network IP (Internet Protocol) address. The printer's IP address is needed to access the printer for printing and printer configuration. The five different ways to assign an IP address are:

- DHCP (Dynamic Host Connection Protocol) - Default setting
- Zebra Setup Utilities (includes the ZebraDesigner Windows printer driver)
- Telnet
- Mobile Apps
- ZebraNet Bridge

DHCP for Personal Networks

The printer by default is set to operate on an Ethernet LAN or Wi-Fi network with DHCP. This setting is intended primarily for personal networks. The network automatically provides a new network IP address each time the printer is turned on. The Windows printer driver uses a Static IP address to connect to the printer. The IP address set in the printer driver will need to be changed to access the printer if its assigned IP address has changed after the printer's initial installation.

Managed Networks

Using the printer in a structured network (LAN or Wi-Fi) requires a network administrator to assign the printer a Static IP address and other settings needed to operate on the network properly.

Print Server - Default User ID and Password

There are some features that require the default User ID and/or default password to access the printer's print server or if you have the Wi-Fi option in the printer. The Factory Default Values are shown below:

- **User ID**: **admin**
- **Password**: **1234**

Wi-Fi and Bluetooth Classic Wireless Connectivity Option

This guide covers basic configuration of your Internal Wi-Fi Print Server and Bluetooth Classic 4.X wireless connectivity option.This manual only covers installing the Wi-Fi as part of the Wi-Fi and Bluetooth Classic wireless connectivity option in the Setting Up the Wi-Fi Print Server Option. See the Zebra Web site for **Wired and Wireless Print Server User Guide** for more information on the printer's Ethernet operation.

This manual only covers installing the Bluetooth as part of the Wi-Fi and Bluetooth Classic wireless connectivity option in the Bluetooth Option Configuration. See the Zebra Web site for **Bluetooth Wireless Guide** for more information on the printer's Bluetooth operation.

Setup for Windows® OS

The section helps you setup communications between your printer and the Windows operating system environment.

Windows to Printer Communication Setup (Overview)

For supported Windows Operating systems (most common) with a Local (wired) connection:

1. **Download the Zebra Setup Utilities** from the Zebra web site.
   - ZD200 Series Direct Thermal Printer — www.zebra.com/zd200d-info
2. **Run**' **the Zebra Setup Utilities** from your Download directory.
3. **Click on 'Install New Printer'** and run the install wizard.
4. Select 'Install Printer'.and select your printer's model number from the list of ZDesigner printers.
5. Select the USB port and connect to the PC. Use the USB interfaces to assist Wizard guided installation of networked or Bluetooth Classic (4.0).
6. Turn the printer ON and configure printer communications for your interface type.
7. Use the Windows driver to print a 'Test Print' to verify operation with Windows.

install Windows® Printer Drivers

Install the Zebra Setup Utilities (ZSU) before applying power to the printer connected to the PC (running a Zebra driver supported Windows operating system). The utility installs the Zebra Windows drivers first. The ZSU installation wizard will then prompt you to apply the printer power. Continue to follow the instructions to complete your printer installation.

The Zebra Setup Utility is designed to assist you setting up printer communication on a PC running the Windows operating system. The cabling and unique parameters for each of these physical printer communication interfaces is discussed in the following pages to assist you with making configuration setup choices prior to and immediately following applying power. The Zebra Setup Utilities configuration wizards will instruct you to turn the printer's power on at the appropriate time to complete the installation of your printer.

For more details on installing Ethernet (network) and Bluetooth interfaces:

- Wired and Wireless Print Servers User Guide
- Bluetooth Wireless Guide

Setting Up the Wi-Fi Print Server Option

This section covers basic configuration of your internal Wi-Fi Print Server option. For more detailed information, refer to the **Wired and Wireless Print Servers User Guide**.

Note • The wireless radio option, which includes Wi-Fi, Bluetooth classic and Bluetooth low energy, is only available as a factory installed configuration.

You may configure your printer for wireless operation in the following ways. This basic guide covers only the first option, the **Connectivity Wizard**.

- **Through the Connectivity Wizard**, which writes a ZPL script for you. On the last screen of the utility, you may choose to send the command directly to your printer, or you may choose to save the ZPL script to a file. The saved ZPL file has several purposes:
  - The file can be sent to the printer through any available connection (serial, parallel, USB, or wired print server).
  - The file can be resent to the printer after the network settings have been restored to factory defaults.
  - The file can be sent to multiple printers that will use the same network settings.
- **Through ZPL** script that you write yourself. Use the **^WX** command to set the basic parameters for security type. You can send the command through any available connection (serial, parallel, USB, or wired print server). Refer to the ZPL Programming Guide for more information on this option.
- **Through Set/Get/Do (SGD) commands** that you send to the printer. Begin with wlan.security to set the wireless security type. Depending on which security type that you select, other SGD commands will be necessary to specify other parameters. You can send the commands through any available connection (serial, parallel, USB, or wired print server). Refer to the ZPL Programming Guide for more information on this option.

Configure Using the ZebraNet Bridge's Connectivity Wizard

Note • The preferred tool for connecting and configuring your printers to cloud, WLAN, and LAN; is now Link-OS Profile Manager. You can get Profile Manager and ZebraNet Bridge Enterprise (local and LAN configurations) utility is available through http://www.zebra.com/software. ZebraNet Bridge Enterprise version 1.2.5 or later is required to configure the printer correctly for use.

The Connectivity Wizard, which is part of this software, allows you to configure your printer easily for wireless operation by writing the appropriate ZPL script for you. Use this utility when you are first installing the wireless print server or after you set the network options back to factory defaults.

Note • You can only set up one print server at a time with the Connectivity Wizard. To configure multiple print servers (wired and wireless), run the program once for each print server.

To use the Connectivity Wizard, complete these steps:

1. If it is not already installed, install ZebraNet Bridge Enterprise on your computer.

   You can get the program from the Zebra Web site at http://www.zebra.com/software.

2. Launch the ZebraNet Bridge Enterprise program.

   If you are prompted for a serial number, you may click Cancel. You will still be able to use the Connectivity Wizard.

3. From the Menu bar, select Tools > Connectivity Wizard. The Connectivity Wizard opens.

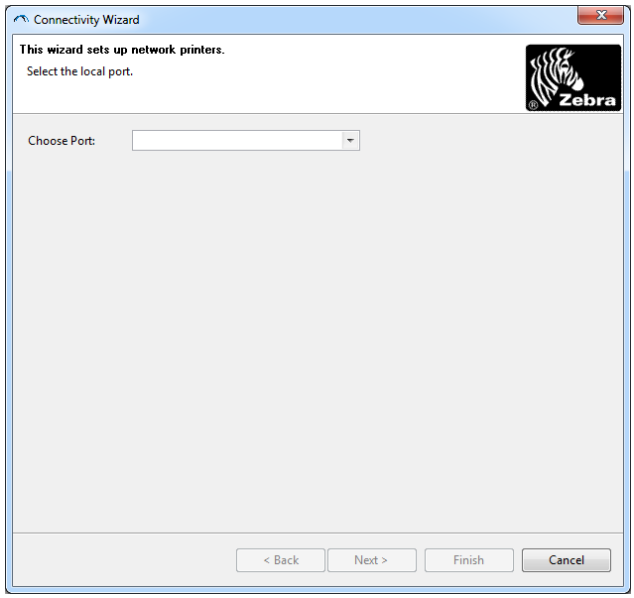

4. From the Choose Port list, select the port to which your printer is connected.
   - If you will save the file without sending it to the printer, you may select any available port.
   - If you select File, you will be asked to browse to the location of the file you want to save.
   - If you select a serial port, the serial configuration information appears below the 'Choose Port' list. If necessary, change the serial communication settings to match your printer's settings.

Note • If a port is in use by another device, it will not be included in the drop-down list.

5. Click Next.

   The wizard prompts for the print server device to configure.

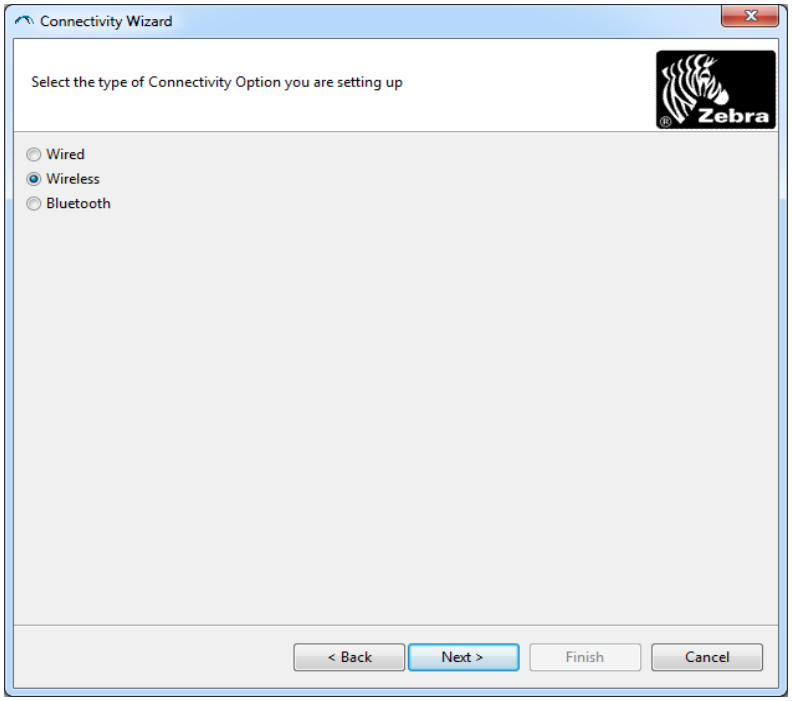

6. Select Wireless and then click Next.

   The wizard prompts you for the type of printer you are using.

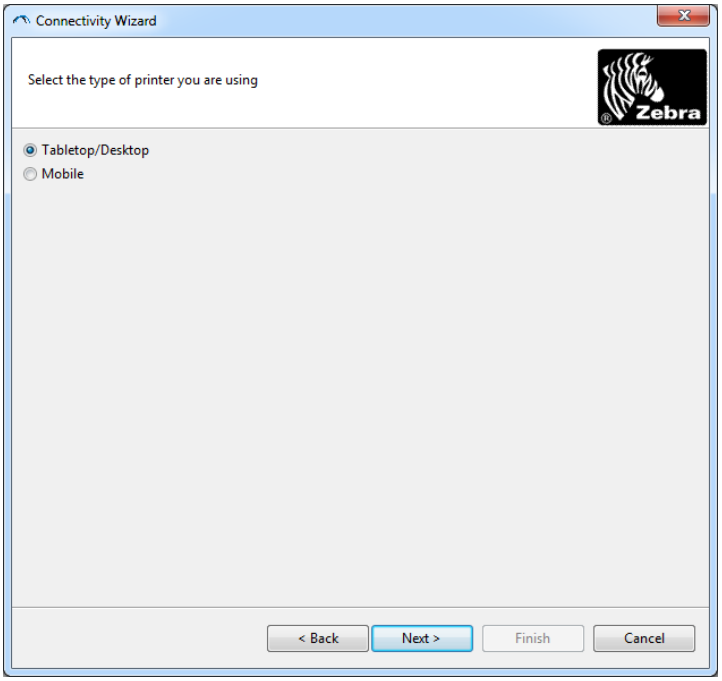

7. Select the type of printer you are using and then click Next.
   The wizard prompts for the wireless IP information.

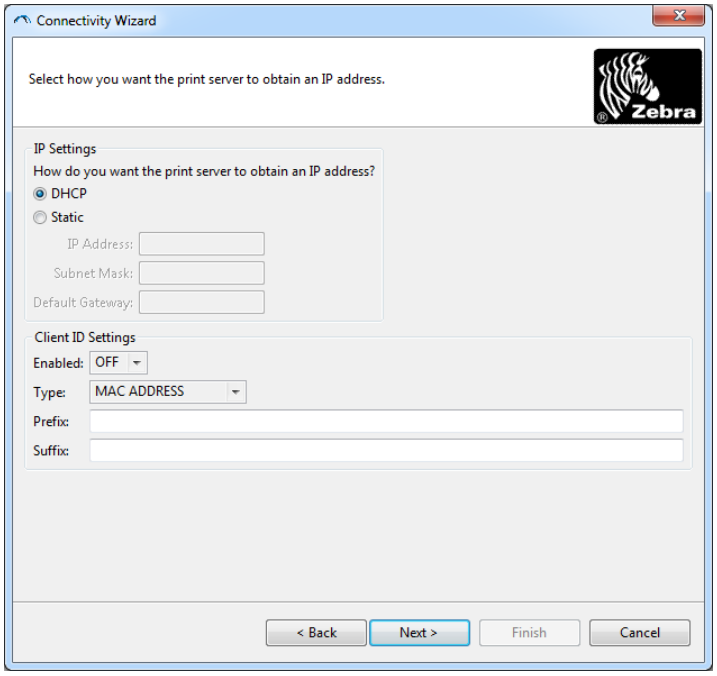

8. Enable the DHCP (dynamic) or Static IP option.
   - **DHCP**
     1. Select DHCP and click Next.
     2. Continue with step 9.
   - **Static** (**IP**)
     3. Select Static.
     4. The IP settings fields are activated.
     5. Enter the IP Address, Default Gateway, and Subnet Mask for the wireless print server. Contact your network administrator for the correct values.
     6. Continue with step 9.

9. Click Next.

   The Wireless Settings window opens.

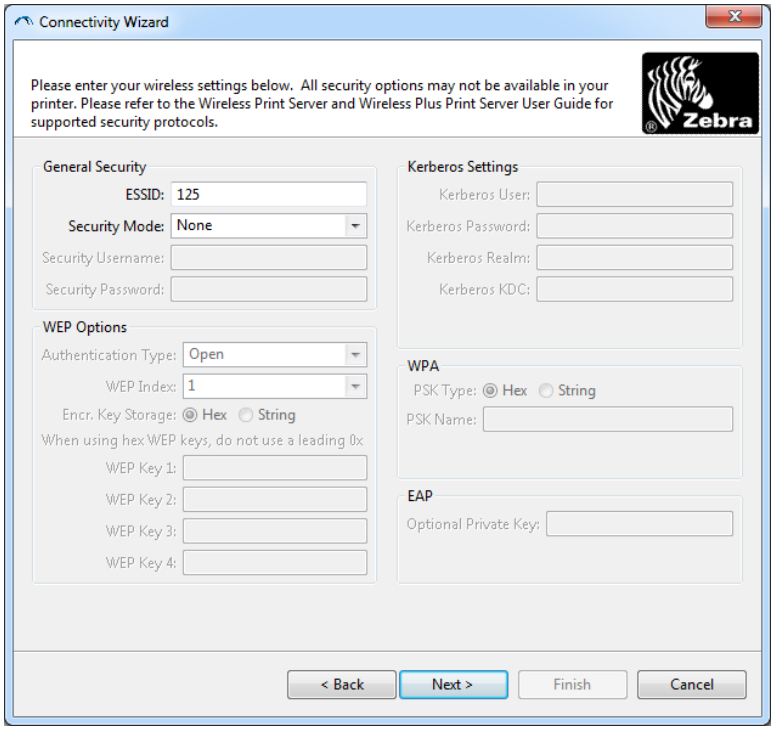

10. Enter the ESSID.

Note • The ESSID and pass phrase, if used, must be set at your access point before completing these steps.

11. From the drop-down, select your Security Mode.

- **None** (no security protocol selected)
- **EAP-TLS**, **EAP-TTLS**, **EAP-FAST**, or **WPA-EAP-TLS**

  In the EAP section of the window, if necessary, enter the Optional **Private Key**.

  Click Next and continue with step 12.
- **PEAP**, **LEAP**, **WPA-EAP-TTLS**, **WPA-PEAP**, or **WPA-LEAP**

  In the General Security section of the window, enter the **Security Username** and **Password**.

  Click Next and continue with step 12.
- **WPA-PSK**

  In the WPA section of the window:

  1. Select the **PSK Type**.
  2. Enter the **PSK Name**.

  Click Next and continue with step 12
- **WPA-EAP-FAST**

  3. In the General Security section of the window, enter the **Security Username** and **Password**.
  4. In the EAP section of the window, if necessary, enter the Optional **Private Key**.

  Click Next and continue with step 12.
- **KERBEROS**

  In the Kerberos Settings section of the window, enter the following values:

  - Kerberos User
  - Kerberos Password
  - Kerberos Realm
  - Kerberos KDC

Note • KERBEROS is not supported on Internal Wireless Plus print servers or radio cards.

Click Next and continue with step 12.

12. Click Advanced Options in the Wireless Settings window.

The Advanced Wireless Settings window opens.

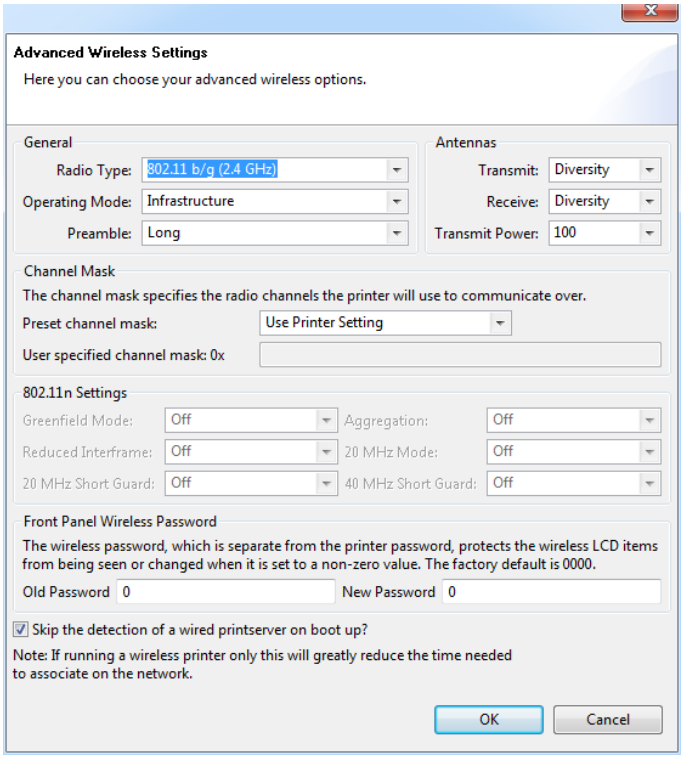

13. Review the settings in the Advanced Wireless Settings window. Change the settings as necessary, and then click OK. The Wireless Settings window returns.

14. Click Next.

    Based on your selections in the Wireless Setup Wizard, the program writes the appropriate ZPL commands and displays them for your review. If you selected Tabletop/Desktop then the a dialog box similar to this displays.

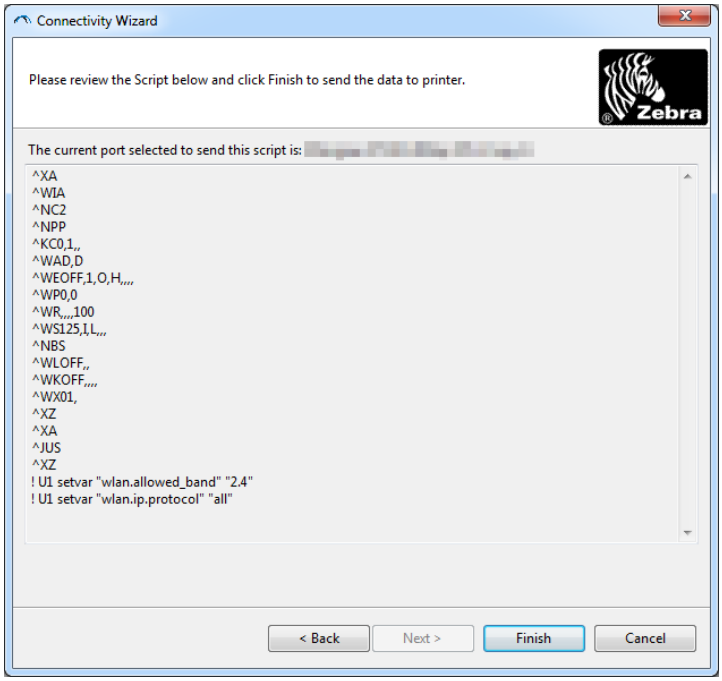

15. Determine if you will send the script immediately, or save it for use at a later time.

Using a Configuration Script

Complete setup by sending the ZPL script to the printer through the port selected at the beginning of this procedure.

1. Verify that the printer is connected to the computer through the wired cable connection to the USB port.
2. If you have not already done so, turn ON the printer.
3. On the Review and Send ZPL for Wireless window, click Finish.
4. The printer sends the ZPL script to the printer through the interface port. The Wireless Setup Wizard screen closes.
5. Turn the printer OFF and then back ON.

Saving a Configuration Script

Save the ZPL script to a file for use later or for use with other printers.

Note • You can send the ZPL script file to multiple printers that use the same configuration, or you can send the file to a printer that had the network settings restored to the factory defaults. This saves you from having to go through the Wireless Setup Wizard more than once.

1. On the 'Review and Send ZPL for Wireless' window, highlight the script, right-click, and select Copy.
2. Open a text editor, such as Notepad, and paste the script into the application.
3. Save the script.
4. In the Connectivity Wizard, click Cancel to exit without sending the script at this time.
5. If you have not already done so, turn ON the printer.
6. Send the ZPL file to the printer through the connection of your choice.
7. Observe the wireless status on the printer's indicator lights, and confirm that you have set up your printer for wireless connectivity.

Bluetooth Option Configuration

The Zebra Setup Utilities provides a quick and easy way to configure a Bluetooth wireless connection with your printer.

1. Double-click the Zebra Setup Utilities icon on your desktop.
2. Connect a USB cable from your printer to your computer.
3. On the first ZSU screen, highlight the printer displayed in the window and click on the Configure Printer Connectivity where shown.
4. Select 'Bluetooth' on the Connectivity Type screen and click on the Next button.

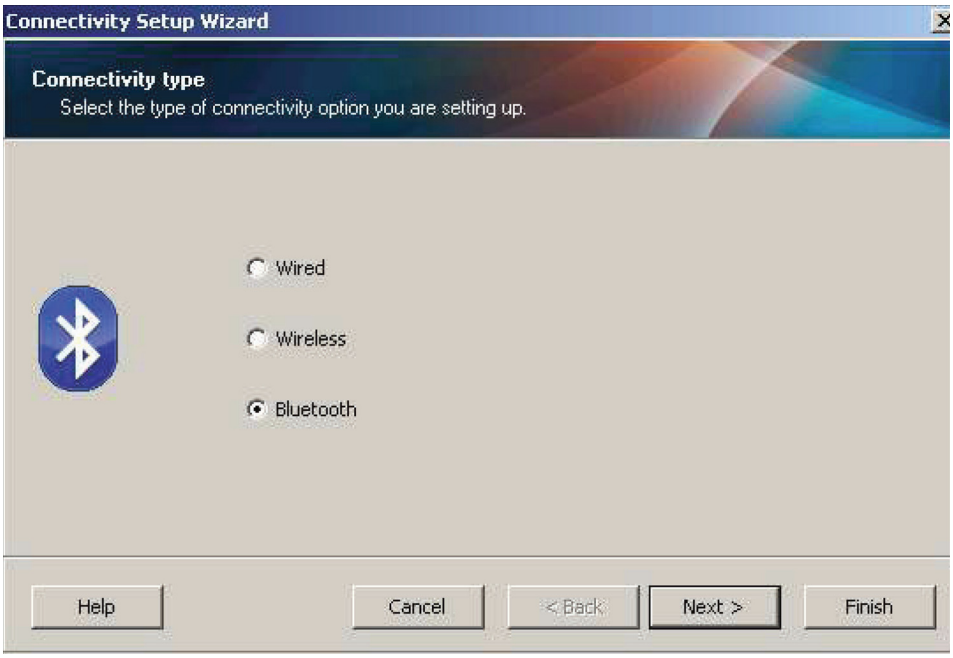

5. On the Bluetooth Settings screen, check "Enabled" to enable Bluetooth functionality.
6. In the Friendly Name text field, set the Bluetooth name of the device. This name appears during device discovery and the central device will label the printer with this name.
7. Set Discoverable to "On" or "Off" to set whether the device will appear when central devices are looking for new devices to pair with.
8. Set Authentication to "On." (Note: This setting does not exist in Link-OS, but you need to turn on if you want to enter a PIN in ZSU. Actual authentication setting on the printer is set in the Security Mode on the Advanced Settings menu.)

9. The values set in the Authentication PIN field will vary depending on the Bluetooth (BT) version of the central device. If the central uses BT v2.0 or older, enter a numeric value in this field. You will be prompted to enter this same value on the central device to verify pairing. Security Mode 2 or 3 in Advanced Settings should also be selected for PIN paring.

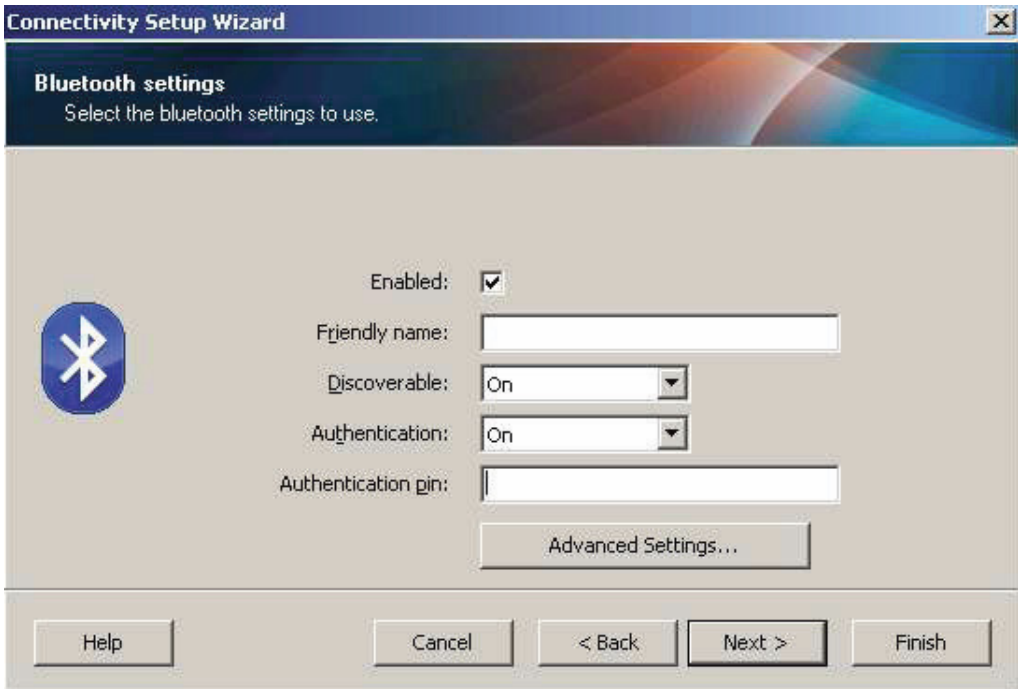

10. If the central device uses BT v2.1 or newer, this setting has no effect. BT v2.1 and newer uses Secure Simple Paring (SSP) which does not require the use of a PIN.

11. Clicking on the Advanced Settings button will display the Advanced Bluetooth Settings window. For more information on Advanced Settings, refer to the **Wired and Wireless Print Server Guide**.

12. Click Next to continue configuring your printer.

13. The SGD commands to properly configure your printer will be displayed. Click Next to continue to the Send Data screen.

14. On the Send Data screen, click on the Printer that you want to send the commands to or click on the File button to save the commands to a file for reuse later.

15. To send the commands to the printer, click on the Finish button. The printer will update and then reboot. You may disconnect the USB interface from your printer now.

16. To complete the Bluetooth pairing process, enable Bluetooth device discovery on your central device and follow the directions provided with the central device.

Connecting to a Windows Vista® SP2 or Windows 7® Central Device

The Windows Vista (SP2 or higher) and Windows 7 Bluetooth install differs from the XP install.

- **Windows Vista:** Open the 'Add Printer' wizard by clicking the 'Start' button, clicking 'Control Panel', clicking 'Hardware and Sound', clicking 'Printers', and then clicking 'Add a printer'.
- **Windows 7:** Open Devices and Printers by clicking the 'Start' button, and then, on the 'Start' menu, clicking 'Devices and Printers'
- Some non-Microsoft Bluetooth dongles and built-in Bluetooth devices in the host PC's have marginal driver support for Secure Simple Paring (SSP) printing and may not complete the 'Add printer' wizard normally. You may need to go to the 'Bluetooth Devices' in the 'Control Panel' or from the system tray on the Windows 'Start' bar and activate SPP for the 'device', your Bluetooth printer you are installing. Install the printer to a local printer (USB for your printer) and then change the 'Port' after the install has completed to the SPP (virtual serial port) COM port.

1. Access the 'Devices and Printers' from the Windows Start menu.
2. Check for Bluetooth devices in the 'Devices and Printers' window. Note the generic Windows Bluetooth icon below.

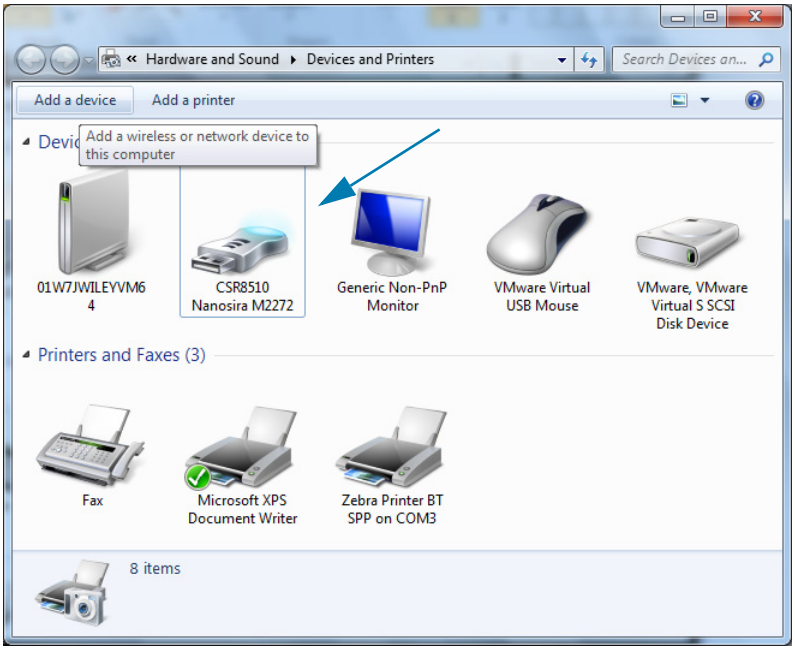

3. Hover over the Bluetooth icon with the mouse pointer and the icon will highlight. Right-Click on the high-lighted Bluetooth icon. Select ‘Bluetooth Settings’ from the pop-up menu. Verify that both of the Connections check boxes are checked. Verify that the ‘Turn off the Bluetooth adapter’ is not checked. Click the ‘Apply’ button. Click the ‘OK’ button to close the window.

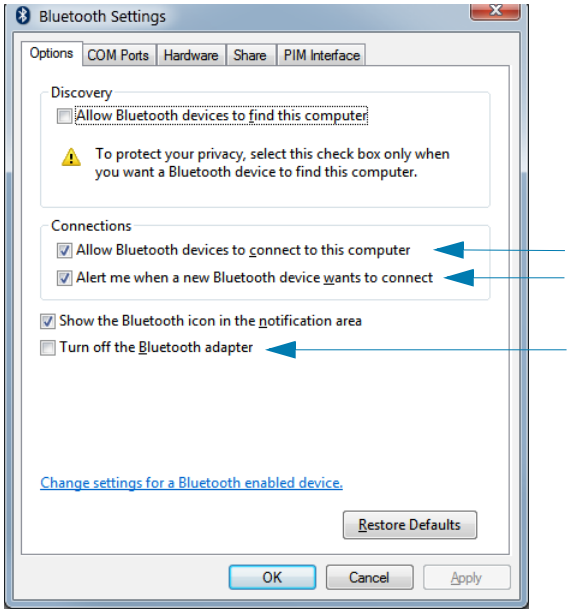

4. Click on the ‘Add a device’ in the top bar of the “Devices and Printers’ window. The “Add a device’ windows will populate with Bluetooth devices near you.

5. Turn the Bluetooth 4.0 (3.0 compatible) enabled Zebra printer on. After a few moments the “Add a device’ windows will add your new printer. Click on the printer icon. Right-Click and select ‘Add device’.

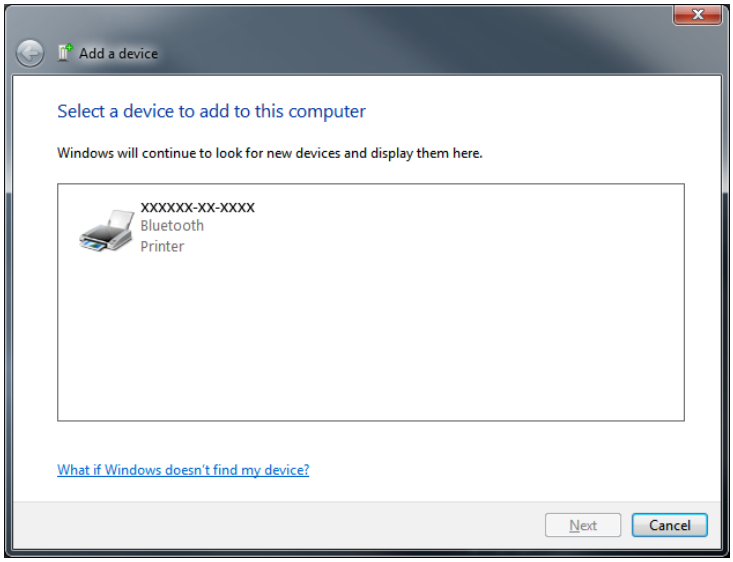

6. The printer will print a pairing code. Verify that the pairing numbers match with those on your display screen. If the numbers match, then press the 'Next button' in the 'Add a device' window.

7. When the pairing process successfully completes, the following message will be displayed.

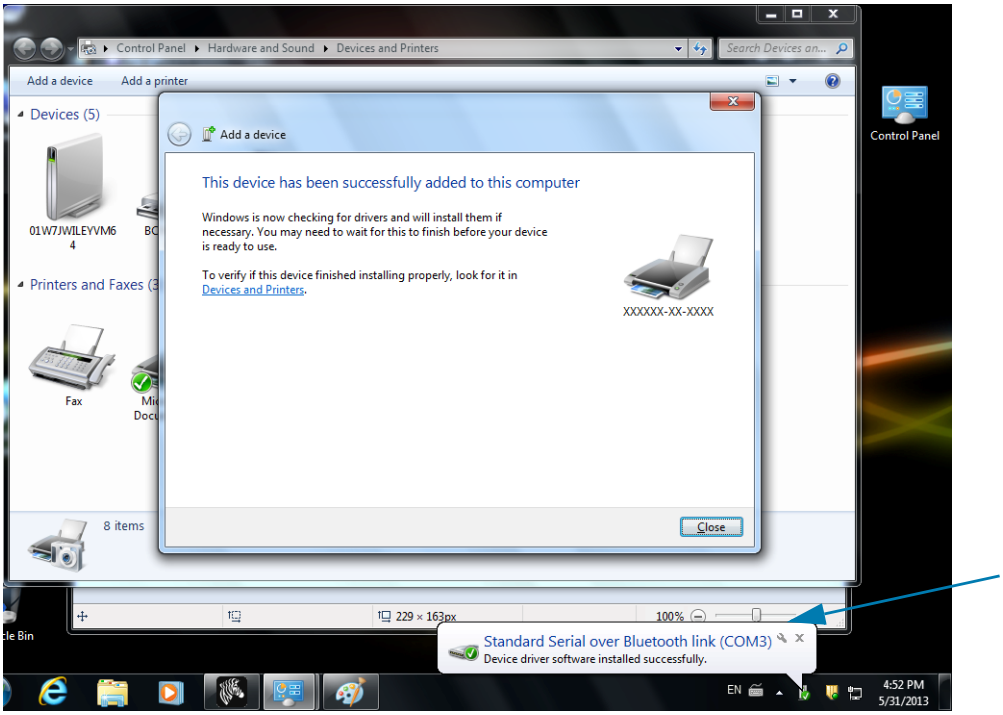

Note • The COM port number displayed in the task bar pop-up. It will only remain for a few seconds.

Connecting the Printer to a Windows 8 OS

Before adding (also called pairing) a Bluetooth enabled device, make sure it is turned on and discoverable. As stated in the previous section under Connecting to a Windows Vista® SP2 or Windows 7® Central Device, your Windows device may need a Bluetooth adapter to connect to Bluetooth device. Check with your device manufacturer's User Manual for further information.

1. Swipe in from the right edge of the screen or move your mouse towards the right edge of the screen, select **Settings**, and then select **Change PC Settings**.

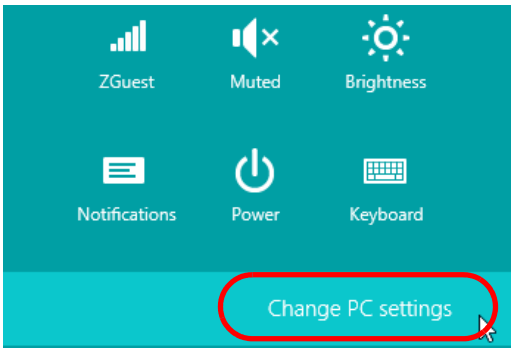

2. Select **PC and devices**, and then select **Bluetooth**. Once Windows displays the Bluetooth-enabled devices, select the device and click **Pair.**

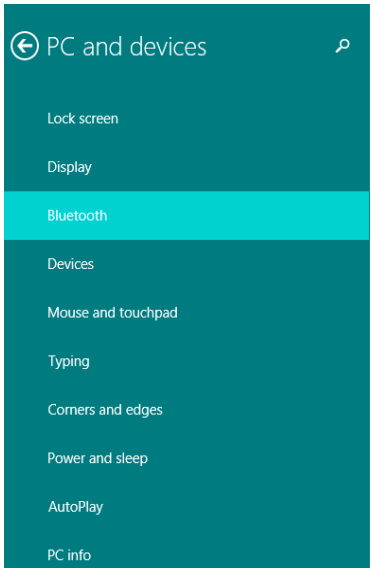

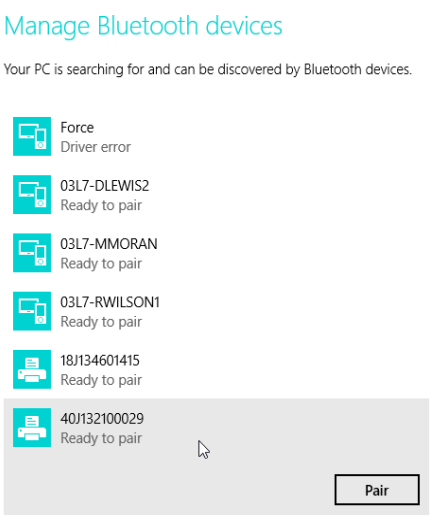

Note • Windows will display the pairing code for only 10 seconds, so complete this step quickly!

3. Follow the instructions on your screen to finish pairing your device.

Connecting the Printer to a Windows 10 OS

Before adding (also called pairing) a Bluetooth enabled device, make sure it is turned on and discoverable. As stated in the previous section under “Installing the Printer on a Windows 7 PC,” your Windows device may need a Bluetooth adapter to connect to Bluetooth device. Check with your device manufacturer’s User Manual for further information.

1. Open the Windows Start Menu by clicking on the Windows Start ( )button and select **Settings**.

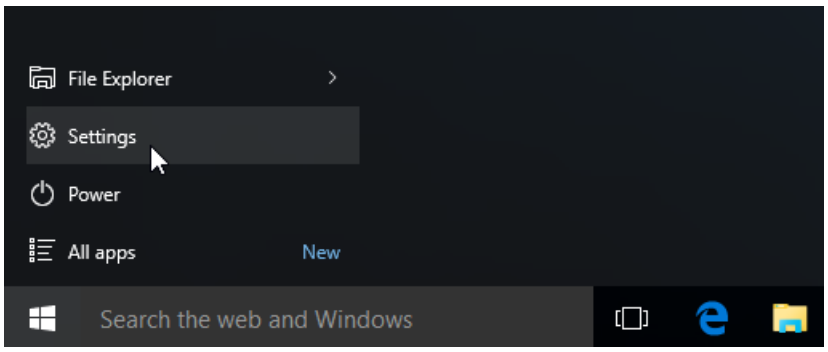

2. Click on the **Devices** category in the Settings window.

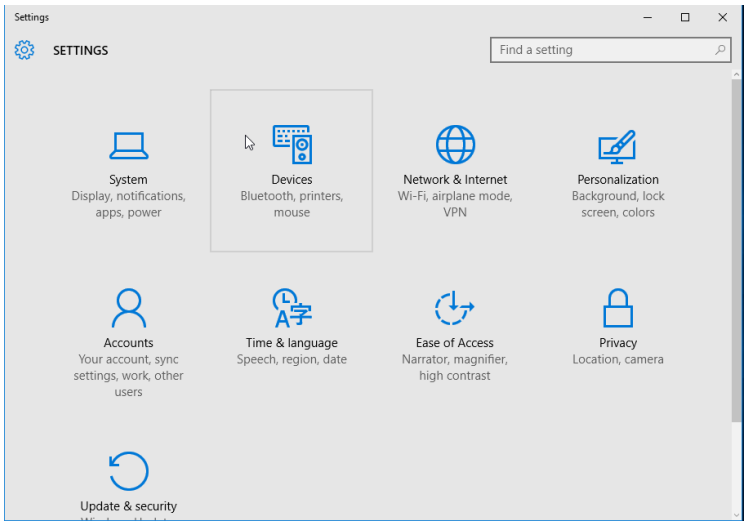

3. Click on Bluetooth. If your PC doesn't have Bluetooth installed, the Bluetooth category will not be displayed in the list of device categories. The printer is identified by the serial number.

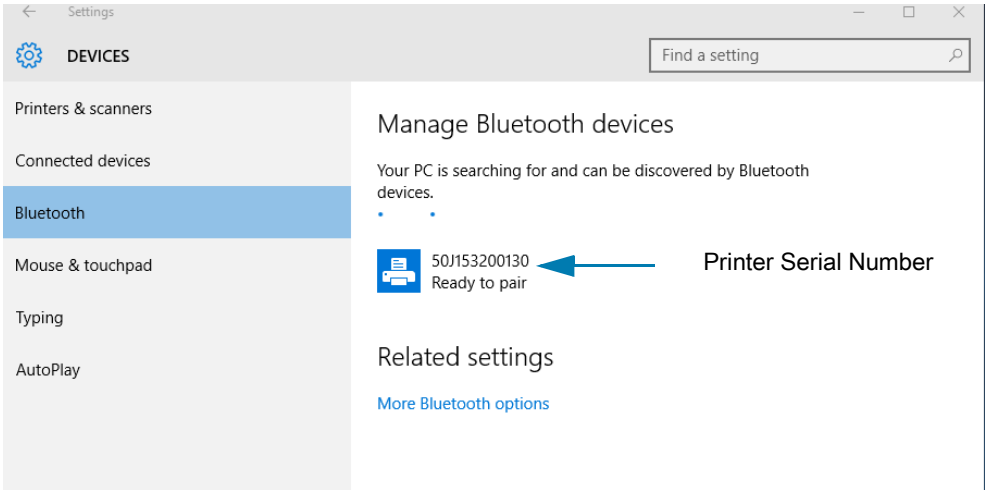

4. Click on the printer and then click on the 'pairing' button for the printer.

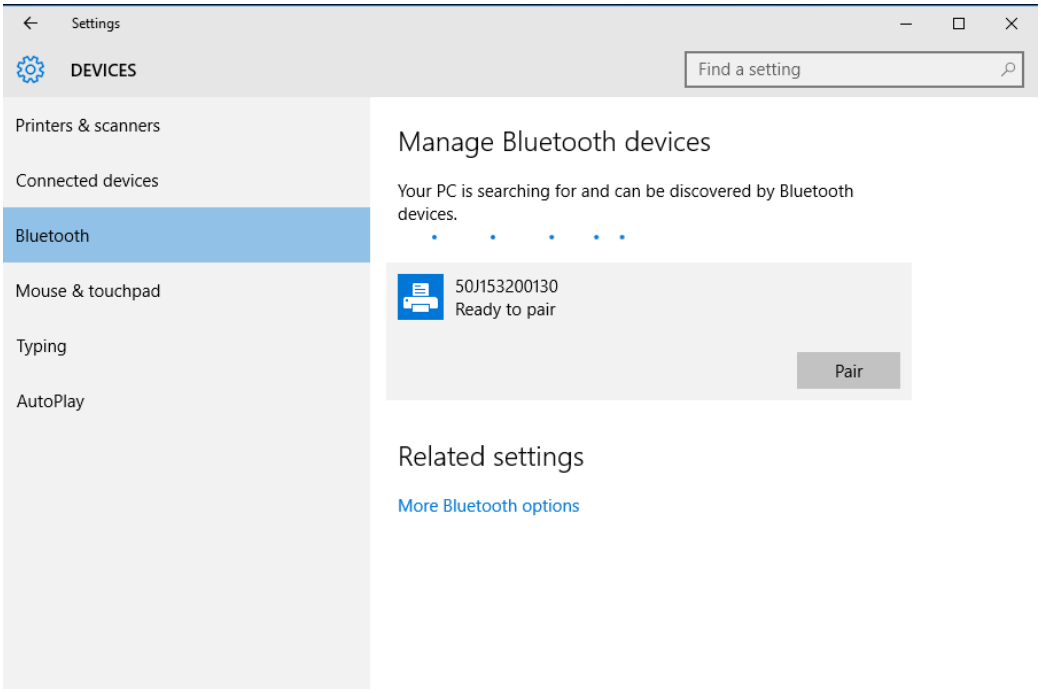

5. The printer will print a passcode. Compare that with the passcode showing on screen. Click ‘Yes’ if they match.

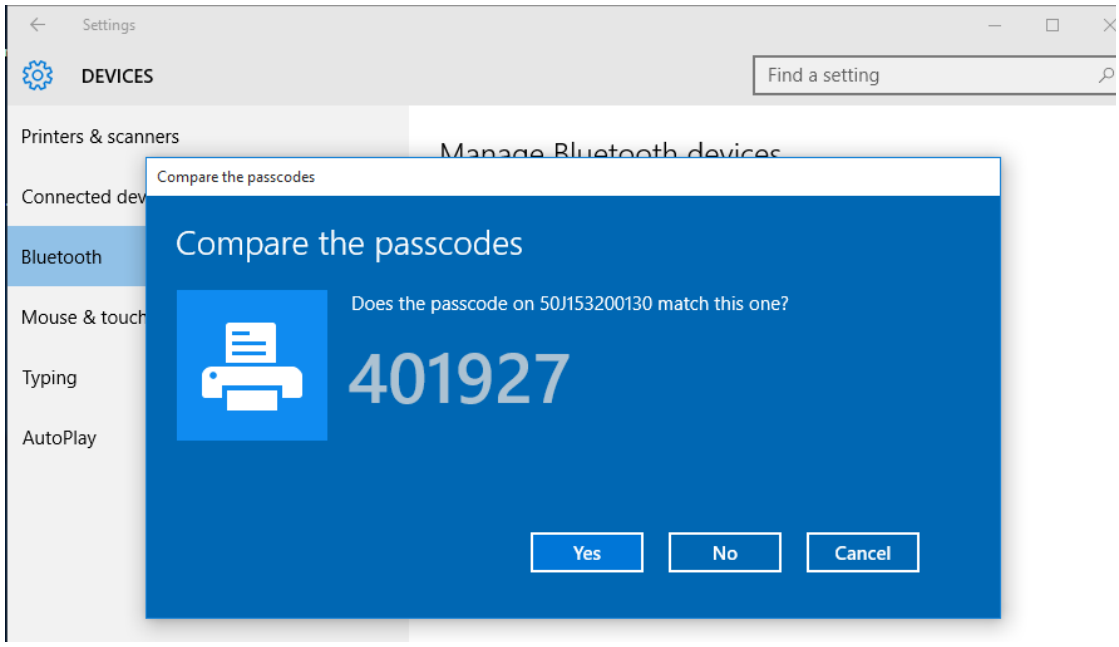

6. The printer status changes to connected when pairing has completed.

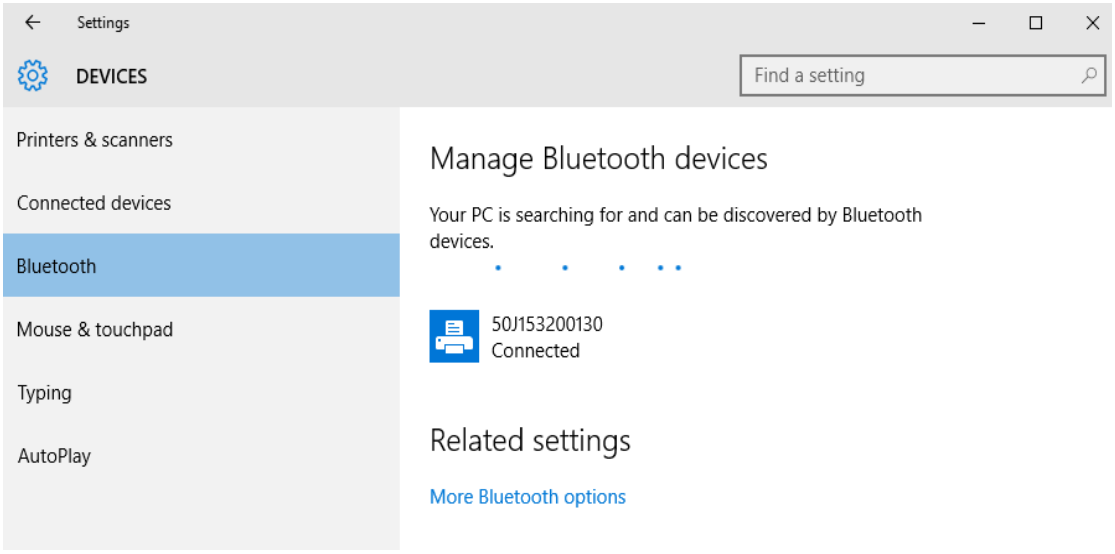

After Your Printer is Connected

Now that you have basic communication to your printer, you may want to test printer communications and then install other printer related applications, drivers or utilities.

Testing Communications by Printing

Verifying the print system's operation is a relatively simple process. For Windows operating systems, use the Zebra Setup Utility or the Windows 'Printers and Faxes' Control Panel to access and print a test label. For non-Windows operation systems, copy a basic ASCII text file with a single command (**~WC**) to print a configuration status report.

Test Printing with Zebra Setup Utility:

1. Open the Zebra Setup Utility.
2. Click on the newly installed printer's icon to select the printer and activate the printer configuration buttons below it in the window.
3. Click the 'Open Printer Tools' button.
4. In the 'Print' tab window, click on the 'Print configuration label' line and click on the 'Send' button. The printer should print a configuration report.

Test Printing with Windows 'Printer and Faxes' menu:

1. Click on the Windows 'Start' menu button, to access the 'Printers and Faxes' menu or 'Control Panel' to access the 'Printers and Faxes' menu. Open the menu.
2. Select the newly installed printer's icon to select the printer and right-click the mouse to access the printer 'Properties' menu.
3. From the printer's 'General' tab window, click on the 'Print Test Page' button. The printer should print a Windows test print page.

Test Print with an Ethernet printer connected to a network

Test Print on an Ethernet printer connected to a network (LAN or WLAN) with a (MS-DOS) 'Command Prompt' (or 'Run' from the Windows XP Start menu):

1. Create a text file with the following ASCII three characters: **~WC**
2. Save the file as: **TEST.ZPL** (an arbitrary file name and extension name).
3. Read the IP address off the printer's Configuration Report's Network Status printout. On a system that is connected to the same LAN or WAN as the printer, type the following in the Web browser window's address bar and enter: **ftp (IP address)**.

   For IP address 123.45.67.01 it would be: **ftp 123.45.67.01**
4. Type the word 'put' followed by the file name and enter. For this 'test print' file, it would be:

   put TEST.ZPL

   The printer should print a new Print Configuration Report.

Test Print with a Copied ZPL Command File for Non-Windows Operating Systems:

1. Create a text file with the following ASCII three characters: **~WC**
2. Save the file as: **TEST.ZPL** (an arbitrary file name and extension name).
3. Copy the file to the printer. For DOS, a file sent to a printer connected to the system's serial port would be as simple as:

   ```
   COPY TEST.ZPL COM1
   ```

   Other interface connection types and operating systems will have different command strings. See your operating system documentation for detailed instructions to copy to the appropriate printer interface for this test.

Print Operations

This section provides general information on media and print handling, font and language support, and the setup of less common printer configurations.

Thermal Printing

The ZD-Series printers use heat to expose direct thermal media 'ink' on the media. Extra care should be taken to avoid touching the printhead which gets hot and is sensitive to electrostatic discharges.

Hot Surface Caution • The printhead becomes hot while printing. To protect from damaging the printhead and risk of personal injury, avoid touching the printhead. Only use the cleaning pen to perform printhead maintenance.

ESD Caution • The discharge of electrostatic energy that accumulates on the surface of the human body or other surfaces can damage or destroy the printhead and other electronic components used in this device. You must observe static-safe procedures when working with the printhead or the electronic components under the top cover.

Replacing Supplies while Using the Printer

If media (labels, receipts, tags, tickets, etc.) run out while printing, leave the printer power on while reloading (data loss results if you turn off the printer). After you load a new roll of media or ribbon, press the FEED button to restart the print operation.

Sending Files to the Printer

Graphics, fonts and programming files can be sent to the printer from the Microsoft Windows operating systems by using the Link-OS Profile Manager, Zebra Setup Utilities (and driver), ZebraNet ™ Bridge or Zebra® ZDownloader found on the Zebra Web site: www.zebra.com/software.

Determining Your Printer's Configuration Settings

ZD-series printer provide a configuration report of the printer's settings and hardware. Operational status (darkness, speed, media type, etc.), installed printer options (network, interface settings, cutter, etc.) and printer description information (serial number, model name, firmware version, etc.) are all included on the configuration report.

- See Test Printing with the Configuration Report to print this label.
- See Managing the ZPL Printer Configuration to help interpret the configuration report and the associated programming command and command states it is identifying in the report.

Select a Print Mode

Use a print mode that matches the media being used and the printer options available. The media path is the same for roll and fanfold media.

To set the printer to use an available print mode:

See the ZPL Programmer's manual, **^MM** command. Support Link — www.zebra.com/zd200d-info

Print Modes

- **TEAR OFF** -— This mode (default) can be used with any printer options and most media types. The printer prints label formats as it receives them. The printer operator can tear off the printed labels any time after they print.
- **PEEL** — Label Dispenser Option only. The printer peels the label from the liner during printing and then pauses until the label is removed.
- **CUTTER** — Cutter Option only. The printer cuts between labels after each one is printed.

Adjusting the Print Quality

Print quality is affected by the heat (density) setting of the printhead, the print speed, and the media in use. Experiment with these settings to find the optimal mix for your application. Print quality can be configured with the Zebra Setup Utility's 'Configure Print Quality' routine.

Note • Media manufacturers may have specific recommendations for speed settings for your printer and the media. The recommended speed may be lower than your printer's maximum speed setting!

The darkness (or density) setting can be controlled by:

- The Set Darkness (**~SD**) ZPL command (consult your ZPL Programming Guide).
- The Windows printer driver or application software such as ZebraDesigner ™ .
- Use the Print Rate (**^PR**) command to lower the print speed to 102 mm/sec (4 ips - default). Consult your ZPL Programming Guide.

The printer's media settings can be verified by printing a Printer Configuration label. See the Test Printing with the Configuration Report for more details.

Adjusting the Print Width

Print width must be set:

- Before you use the printer for the first time.
- Any time you change the width of the media in use.

Print width may be set by:

- The Windows printer driver or application software such as ZebraDesigner ™ .
- Controlling printer operations with ZPL programming; refer to the Print Width (**^PW**) command (consult your ZPL Programming Guide).

Replacing Supplies while Using the Printer

If media (labels, receipts, tags, tickets, etc.) run out while printing, leave the printer power on while reloading (data loss results if you turn off the printer). After you load a new roll of media, press the FEED button to restart.

Printing on Fan-Fold Media

Printing on fan-fold media requires you to adjust the media guides stop position.

1. Open the top cover.

2. Adjust the media guide stop position with the gold thumb wheel. Use a piece of the fan-fold media to set the stop position. Rotate the wheel away from you to make the guides wider. Rotate the wheel toward you to make the media guides narrower.

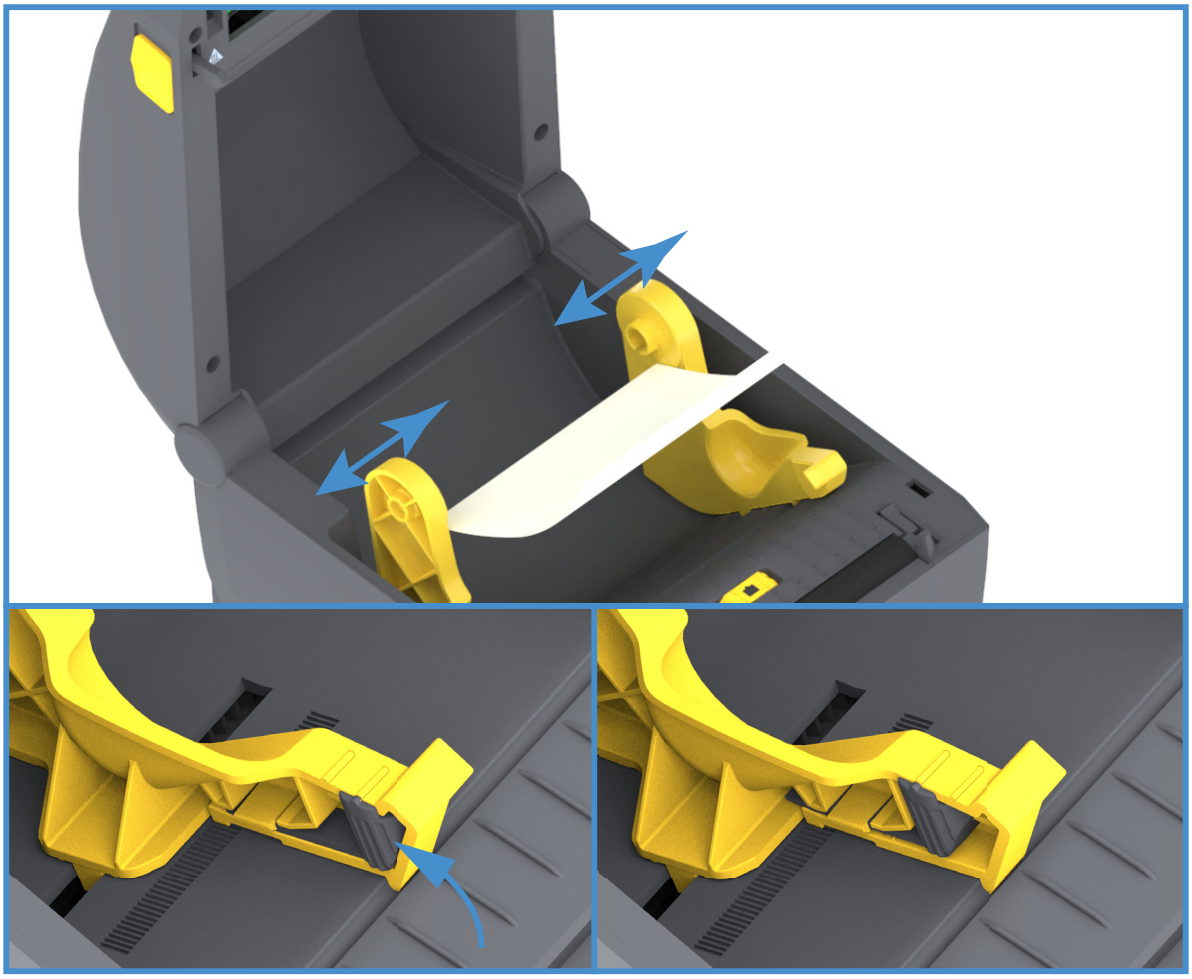

3. Insert the media through the slot at the rear of the printer and place the media between the media guide and roll holders.

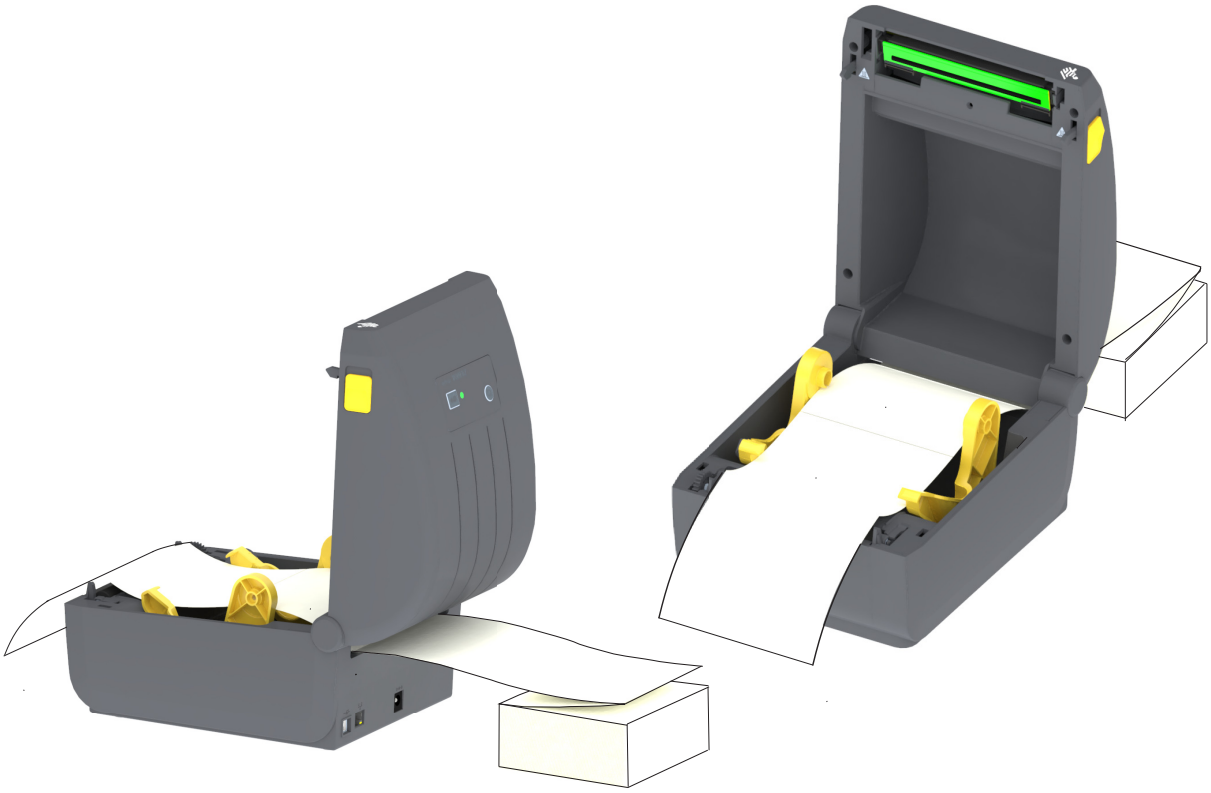

4. Close the top cover.

After printing or using the FEED button to advance several labels: If the media does not track down the center (moves from side to side) or the sides of the media (liner, tag, paper, etc.) are frayed or damaged when exiting the printer, then the media guide stop position may need further adjustment.

If this does not correct the problem, then the media can be routed over the two roll holding pins on the media guide. An empty roll core of the same width as the stack of the fan-fold media can be placed between the roll holders to provide additional support for thin media.

Printing with Externally Mounted Roll Media

The printer accommodates externally mounted roll media similar to the printer's support of fan-fold media. The printer requires the media roll and stand combination to have a low initial inertia to pull the media off the roll.

Externally Mounted Roll Media Considerations:

- The media ideally should enter the printer directly behind the printer through the fan-fold media slot in the rear of the printer. See Printing on Fan-Fold Media for media loading.
- Use the default print speed of 102 mm/sec (4 ips) on ZD230 printer models. Consult your ZPL Programming Guide.
- The media should move smoothly and freely. The media should not slip, skip, jerk, bind and then move, etc. when mounted on your media stand.
- The printer should not touch the media roll.
- The printer should not slip or lift up off the operating surface.

Using the Label Dispenser Option

The label dispenser option allows you to print a label and have the backing material (liner/web) automatically removed. When printing multiple labels, removing the dispensed (peeled) label triggers the printer to print and dispense the next label.

To use dispense-mode, set 'Media Handling' to 'Peel-Off' in the printer driver or with the Zebra Setup Utility using the 'Configure Printer Settings' wizard. Otherwise, you must send the ZPL programming commands to the printer.

When programming in ZPL, you can use the command sequences shown below to configure the printer to use the dispenser option:

^XA ^MMP ^XZ

^XA ^JUS ^XZ

1. Load your labels into the printer. Close the printer and press the FEED button until a minimum of 100 millimeters or 4 inches of exposed labels exit the printer. You can leave the labels on the liner.

2. Lift the liner over the top of the printer. Pull the gold latch in the center of dispenser door away from the printer and the door will open.

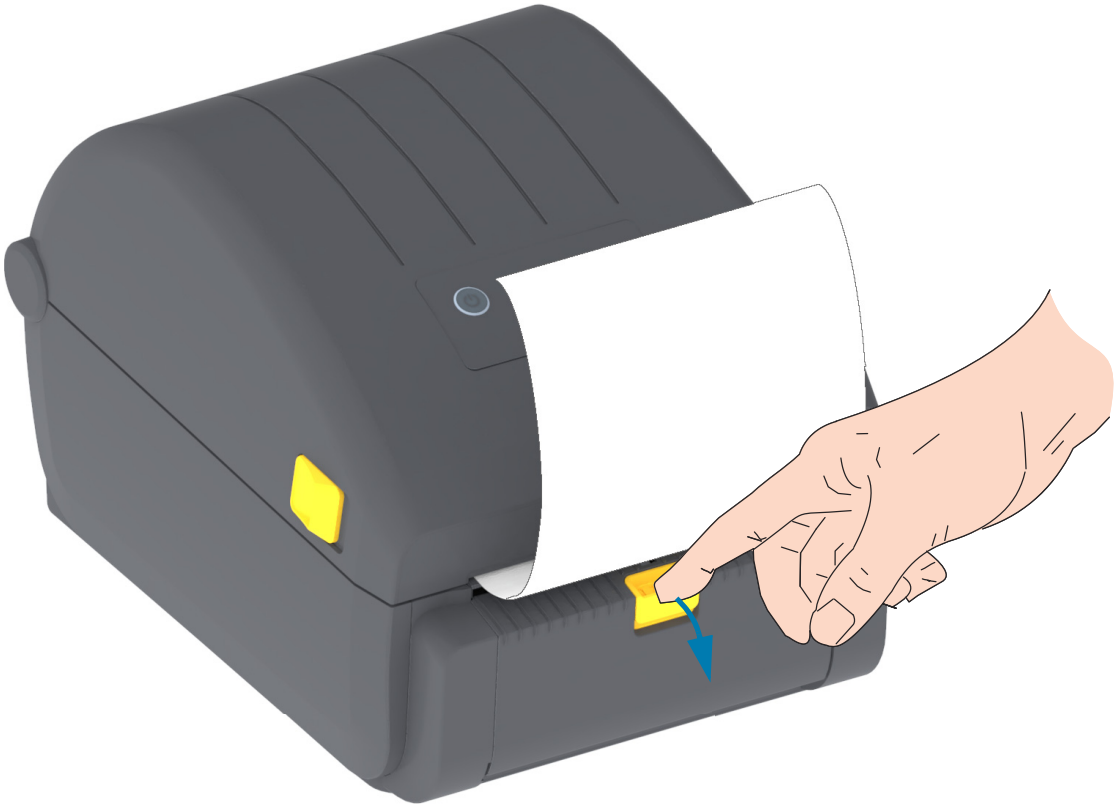

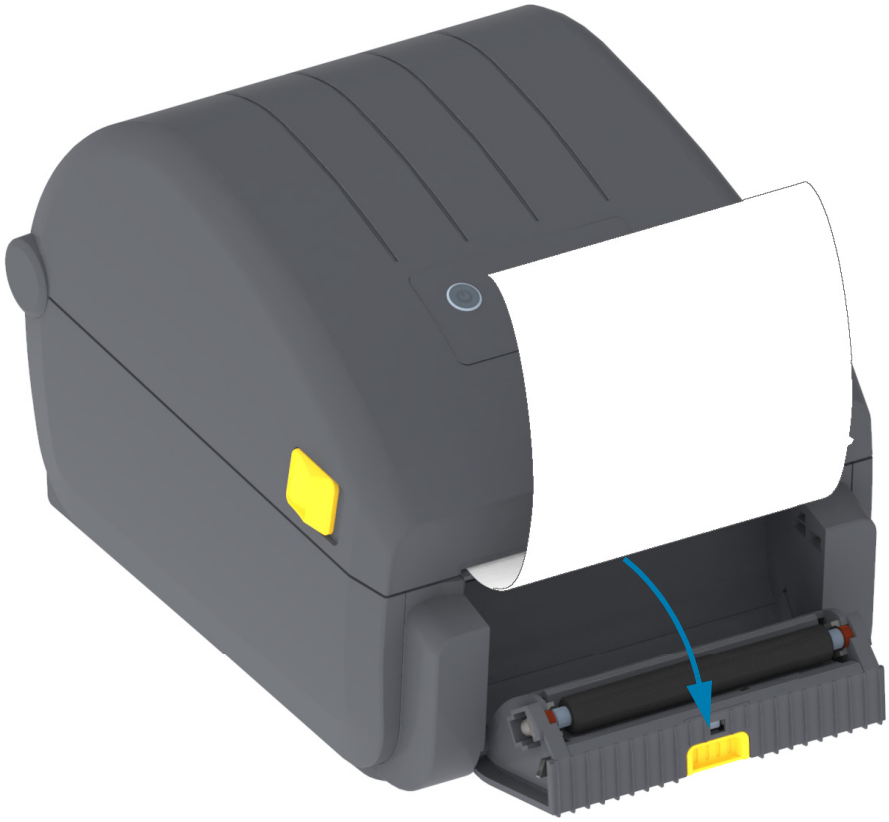

3. Insert the label liner between the dispenser door and the printer body.

4. Close the dispenser door while pulling the end of the label liner tight.

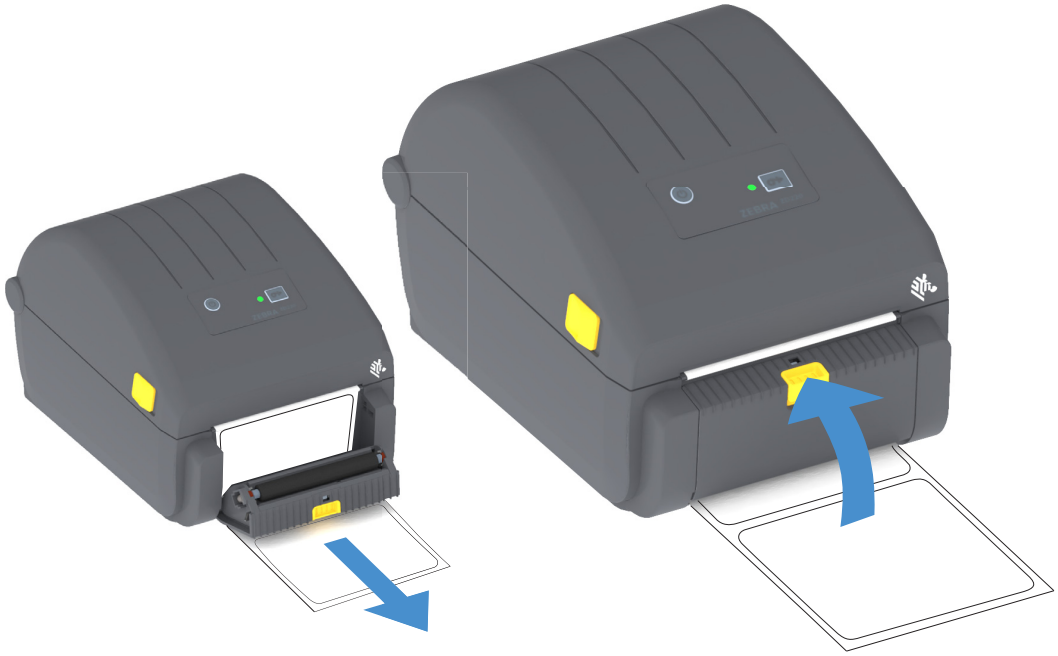

5. Press and release the FEED (Advance) button one or more times until a label gets presented for removal.

6. During the print job, the printer will peel off the backing and present a single label. Take the label from the printer to allow the printer to print the next label.

Note • If you did not activate the label taken sensor to detect the removal of the dispensed (peeled) label with software commands, the printed labels will stack and may bind the mechanism.

Printer Fonts

The ZD-Series printer supports your language and font requirements. The ZPL ™ programming language provides advanced font mapping and scaling technology to support outline fonts (TrueType ™ or OpenType ™) and Unicode character mapping as well as basic bitmapped fonts and character code pages.

The printer's font capabilities are programming language dependent. The ZPL and the legacy EPL programming guides describe and document the fonts, code pages, character access, listing fonts, and limitations for their respective printer programming languages. See the printer programming guides for information on Text, Fonts and Character support.

Zebra has variety of utilities and application software that support font download to the printer for ZPL and EPL printer programming languages.

Important • Some factory installed ZPL fonts in your printer cannot be copied, cloned or restored to your printer by reloading or updating firmware. If these license restricted ZPL fonts are removed by an explicit ZPL object delete command, they must be repurchased and reinstalled via a font activation and installation utility. EPL fonts do not have this restriction.

Identifying Fonts in Your Printer

Fonts and memory are shared by the programming languages in the printer. Fonts can be loaded into various storage locations in the printer. ZPL programming can recognize EPL and ZPL fonts. EPL programming can only recognize EPL fonts. See the respective programmer guides for more information on fonts and printer memory.

ZPL Fonts

- To manage and download fonts for ZPL print operation, use the Zebra Setup Utility or ZebraNet ™ Bridge.
- To display all of the fonts loaded in your printer, send the printer the ZPL command **^WD**. See the ZPL Programmers Guide for details.
  - Bitmap fonts in the various printer memory areas are identified by the **.FNT** file extension in ZPL.
  - Scalable fonts are identified with the **.TTF**, .**TTE** or **.OTF** file extensions in ZPL. EPL does not support these fonts.

Localizing the Printer with Code Pages

The printer supports two sets of language, region and character sets for permanent fonts loaded into the printer for each printer programming language, ZPL and EPL. The printer supports localization with common international character map code pages.

- For ZPL code page support, including Unicode, see the **^CI** command in the ZPL programmer's guide.

Asian fonts and Other Large Font Sets

Asian language ideographic and pictographic fonts have large character sets with thousands of characters that support single language code page. In order to support the large Asian character sets, the industry adopted a double-byte (67840 maximum) character system instead of the single-byte characters (256 maximum) used by Latin based language characters to address large font sets. In order to address multiple languages with a single font set, Unicode was invented. A Unicode font supports one or more code points (relate these to code page character maps) and is accessed in a standard method that resolves character mapping conflicts. The ZPL programming language supports Unicode. Both of the printer's programming languages support the large pictographic double-byte character Asian font sets.

The number of fonts that can be downloaded is dependent upon the amount of available flash memory not already in use and the size of the font to be downloaded.

Some Unicode fonts are large such as MS (Microsoft) Arial Unicode font (23 MB) available from Microsoft or the Andale font (22 MB) offered by Zebra. These large font sets typically support a large number of languages as well.

Getting Asian Fonts

Asian bitmap font sets are downloaded into the printer by the user or integrator. The ZPL fonts are purchased separately from the printer. EPL Asian Fonts are available for free to download from the Zebra Web site.

- Simplified and Traditional Chinese
  (The SimSun scalable Simplified Chinese font is pre-loaded into printers sold with a Chinese power cord.)
- Japanese — JIS and Shift-JIS mappings
- Korean including Johab
- Thai

Media Roll Adapters

Adapter Kit

The media roll adapters kit include a pair of 38.1 mm (1.5 inches) inner diameter (I.D.) media roll adapters and two (2) screws to mount them.

Adapter Usage

- The adapters are intended to be permanently installed in the printer.
- They may be changed to support other media roll sizes that require one of these adapter sizes.
- The adapters may wear out if they are changed too much.
- Removing the media adapters to print on standard roll cores may leave plastic pieces in the media roll holders side areas that rub against the roll. Push those attached pieces back into the side of the media roll holder.

Installing Media Roll Adapters

1. Place one screw in the top adapter mounting hole of both of the roll holders. Start turning the screws clockwise using the Torx wrench until the tip of the screw is just protruding through the inside of the roll holder. The screws are self-tapping.

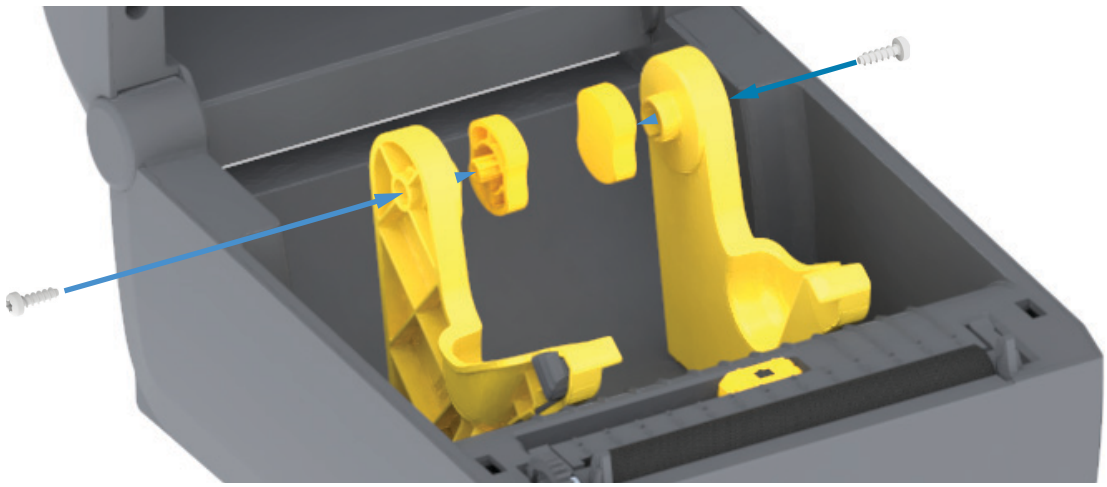

2. Place the adapter on the inside of the roll holder. The large side of the adapter is on top. The smooth side (no ribs) faces the middle of the printer.
3. Align the adapter's top screw hole to the protruding screw tip and pinch it tightly to the roll holder body. Tighten the screw until there is no gap between the adapter and roll holder. Do not tighten beyond this point. Over tightening will strip the thread.
4. Insert a screw in the bottom adapter mounting hole. Pinch the adapter tightly to the roll holder while tightening the screw. Tighten the screw until there is no gap between the adapter and roll holder. Do not tighten beyond this point. Over tightening will strip the thread.
5. Repeat step 1-4 for the other adapter and roll holder.

Maintenance

This section provides routine cleaning and maintenance procedures.

Cleaning

Your Zebra printer may require periodic maintenance to keep your printer functional and printing high quality labels, receipts, tags, etc.

Cleaning Supplies

The following printer cleaning supplies are recommended for use with your printer:

- **Printhead Cleaning Pens** for simple operator printhead cleaning
- **90% min. pure Isopropyl Alcohol** (10% water max.) (Use a labeled alcohol dispenser. Never re-moisten cleaning materials used to clean the printer).
- **Fiber-free Cleaning Swabs** for media path, guides, and sensors **and Cleaning Wipes** for media path and interior (for example Kimberly-Clark Kimwipes).
- **Can of Compressed Air**.

Important • The cutter mechanism does not require maintenance cleaning. DO NOT clean the blade or mechanism. The blade has a special coating to resist adhesives and wear.

Important • Using too much alcohol can result in contamination of the electronic components requiring a much longer drying time before the printer will function properly.

Important • Do Not Use an air compressor in place of the can of compressed air. Air compressors have micro contaminants and particles the get into the air system and damage your printer.

Eye Injury Caution • Use eye protection to protect your eyes from flying particles and objects when using compressed air.

Get Zebra Supplies and Accessories for Cleaning Your Printer

Go to the Zebra Web site: www.zebra.com/accessories

Recommended Cleaning Schedule

Printhead

Interval: Clean the printhead after every 5 rolls printed.

Procedure: Cleaning the Printhead

Platen (Drive) Roller

Interval: As needed to improve print quality. Platen rollers can slip causing print image distortion and in worst case scenarios not move the media (labels, receipts, tags, etc.).

Procedure: See Platen Cleaning and Replacement.

Media Path

Interval: Clean as needed.

Method: Clean it thoroughly with fiber-free cleaning swabs and cloths moistened with 90% isopropyl alcohol. Let alcohol evaporate completely.

Procedure: See Media Path Cleaning.

Interior

Interval: Clean the printer as needed.

Method: Use a soft cloth, brush or compressed air to wipe or blow dust and particles out of the printer. Use 90% isopropyl alcohol and a fiber-free cleaning cloth to dissolve contaminants like oils and grime.

Exterior

Interval: Clean as needed.

Method: Use a soft cloth, brush or compressed air to wipe or blow dust and particles out of the printer. The exterior of the printer can be cleaned using plain soap and water solutions to moisten the cloth. Only use the minimum amount of cleaning solution to avoid getting solution in the printer or other areas. Do not clean connectors or interior of the printer with this method.

Label Dispenser Option

Interval: As needed to improve label dispensing operations.

Procedure: See Label Dispenser Option cleaning.

Cutter Option

Interval: Not an operator serviceable component. **Do Not Clean** inside the cutter opening or blade mechanism. You may use the Exterior cleaning to clean the cutter bezel (housing).

Method: Call a service technician.

Procedure: Not applicable.

Cut Warning • There are no operator serviceable parts in the cutter unit. Never remove the cutter cover (bezel). Never attempt to insert objects or fingers in to the cutter mechanism.

Important • The blade has a special coating to resist adhesives and wear. Cleaning it may ruin the blade.

Important • Using un-approved tools, cotton swabs, solvents (including alcohol), etc.; all may damage or shorten the cutter's usable life or cause the cutter to bind.

Cleaning the Printhead

Always use a new cleaning pen on the printhead (an old pen carries contaminants from its previous use that may damage the printhead).

When you load new media, you should clean the printhead for optimal print operations.

Hot Surface Caution • The printhead becomes hot while printing. To protect from damaging the printhead and risk of personal injury, avoid touching the printhead. Only use the cleaning pen to perform printhead maintenance.

ESD Caution • The discharge of electrostatic energy that accumulates on the surface of the human body or other surfaces can damage or destroy the printhead and other electronic components used in this device. You must observe static-safe procedures when working with the printhead or the electronic components under the top cover.

Direct Thermal Printers

When you load new media, you can also clean the printhead.

1. Rub the cleaning pen across the dark area of the printhead. Clean from the middle to the outside. This will move adhesive transferred from the edges of media to the outside of media path.
2. Wait one minute before closing the printer to allow the components to dry.

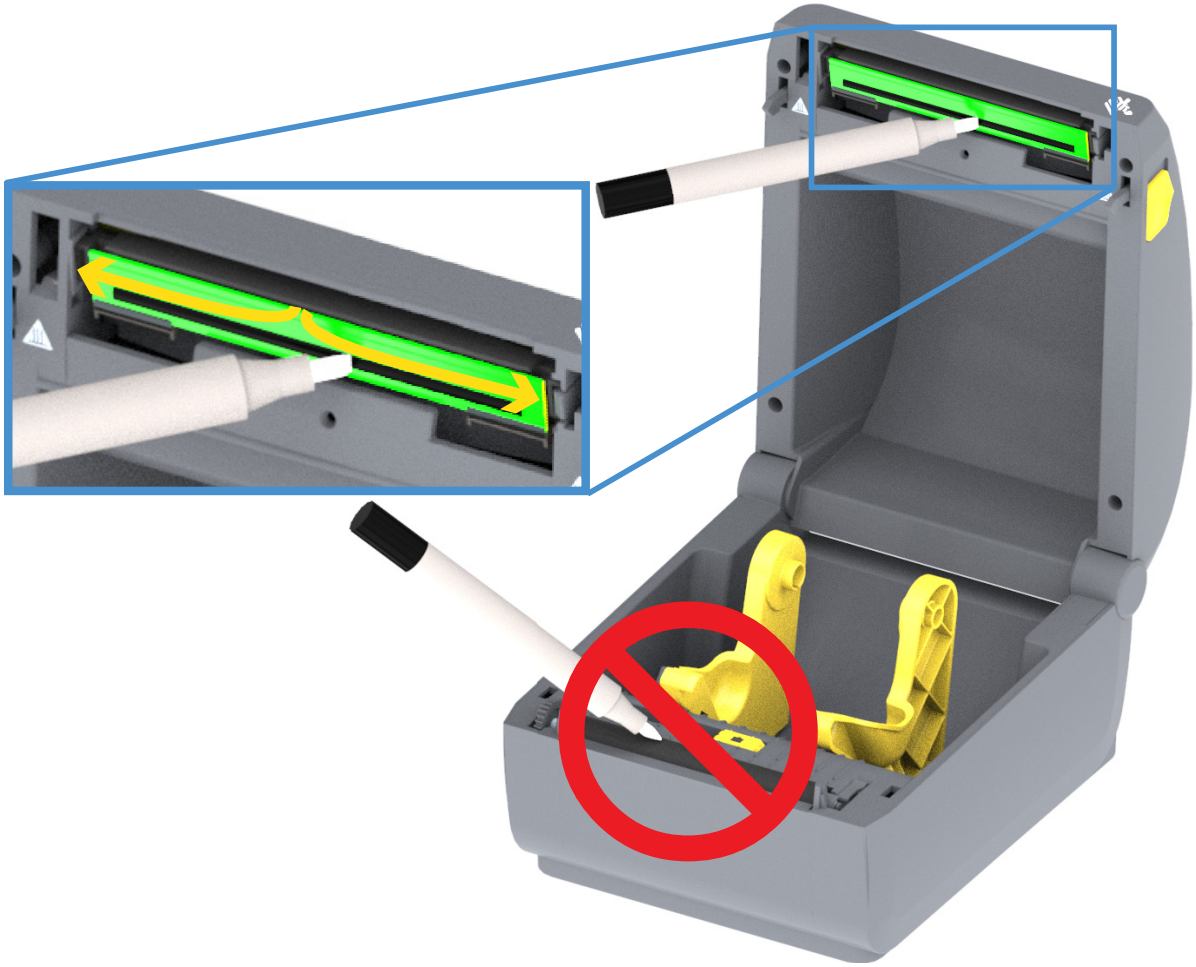

Media Path Cleaning

Use a cleaning swab and/or a lint free cloth to remove debris, dust or crust that has built-up on the holders, guides and media path surfaces. Lightly moisten the swab or cloth with 90% solution isopropyl alcohol. For hard to clean areas, use extra alcohol on a cleaning swab to soak the debris to break up any adhesive that may have accumulated on surfaces in the media compartment.

Do not clean the printhead, sensors, or platen as part of this process.

The lower half of these printers these printers get cleaned the same.

1. Wipe the inside surfaces of the roll holders and the underside of the media guides with a cleaning swabs and wipes.
2. Wipe the movable sensor slide channel (but not sensor). Move the sensor to get to all areas.
3. Wait one minute before closing the printer. Discard used cleaning supplies.

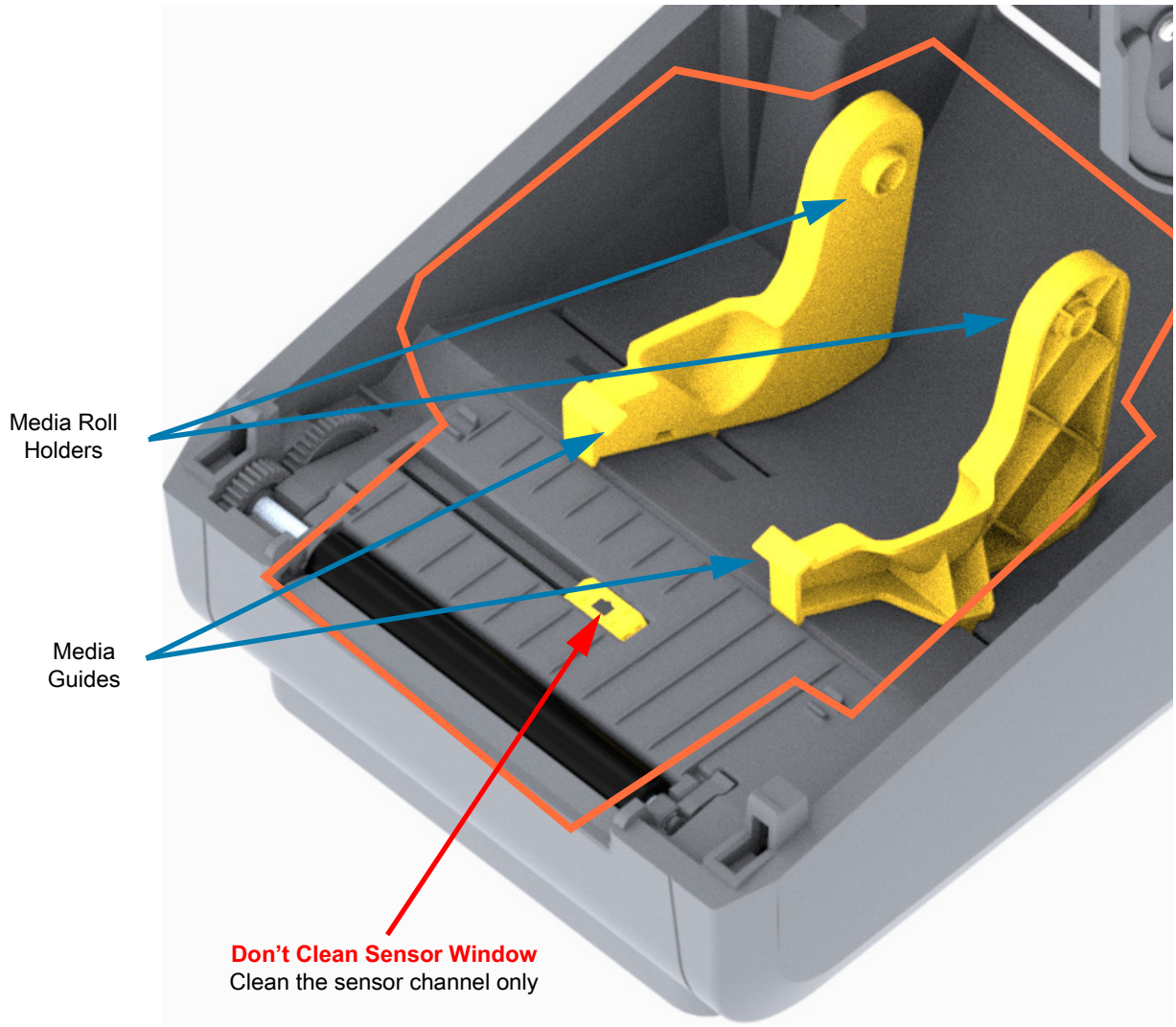

Cleaning the Cutter and Label Dispenser Options

This is a continuation of cleaning the media path for either option, if installed.

Cutter Option Cleaning

The plastic media path surfaces can be cleaned but not the internal cutter blades or mechanism.

Important • The cutter blade mechanism does not require maintenance cleaning. DO NOT clean the blade. This blade has a special coating to resist adhesives and wear.

Cut Warning • There are no operator serviceable parts in the cutter unit. Never remove the cutter cover (bezel). Never attempt to insert objects or fingers in to the cutter mechanism.

Note • Using unapproved tools, cotton swabs, solvents (including alcohol), etc. all may damage or shorten the cutter's usable life or cause the cutter to jam.

1. Wipe the ridges and the plastic surfaces of the media entry (inside) and exit slot (outside) of the cutter. Clean inside the areas outlined in blue.
2. Repeat as necessary to remove any adhesive or contaminate residue after it dries.

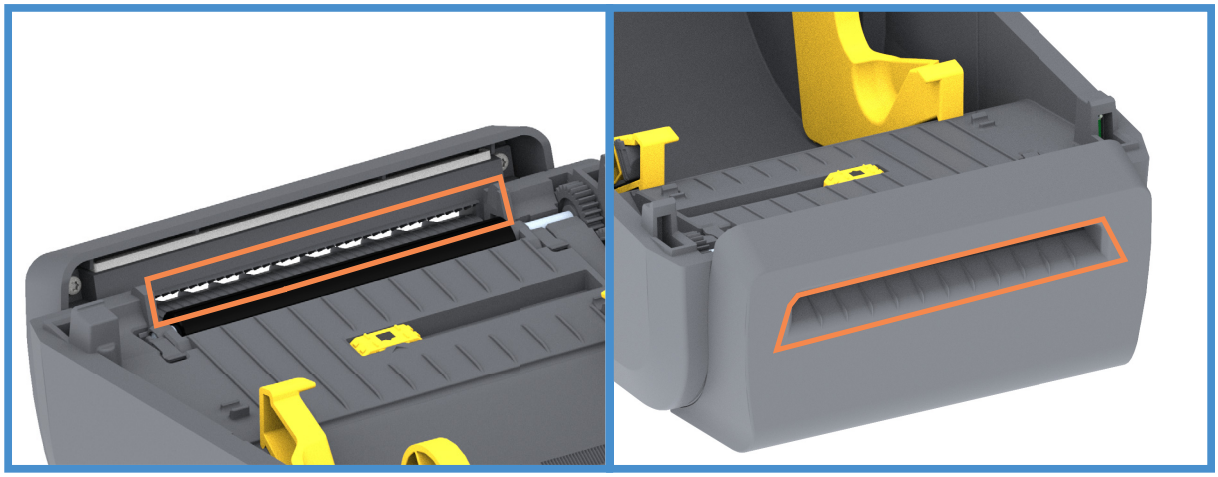

Label Dispenser Option Cleaning

1. Open the door and clean the peel bar, inner surfaces and ridges on the door.
2. Wipe the roller while rotating it. Discard the swab or cloth. Clean again to remove diluted residue.
3. Clean the sensor window. The window should be clear of streaks and residue.

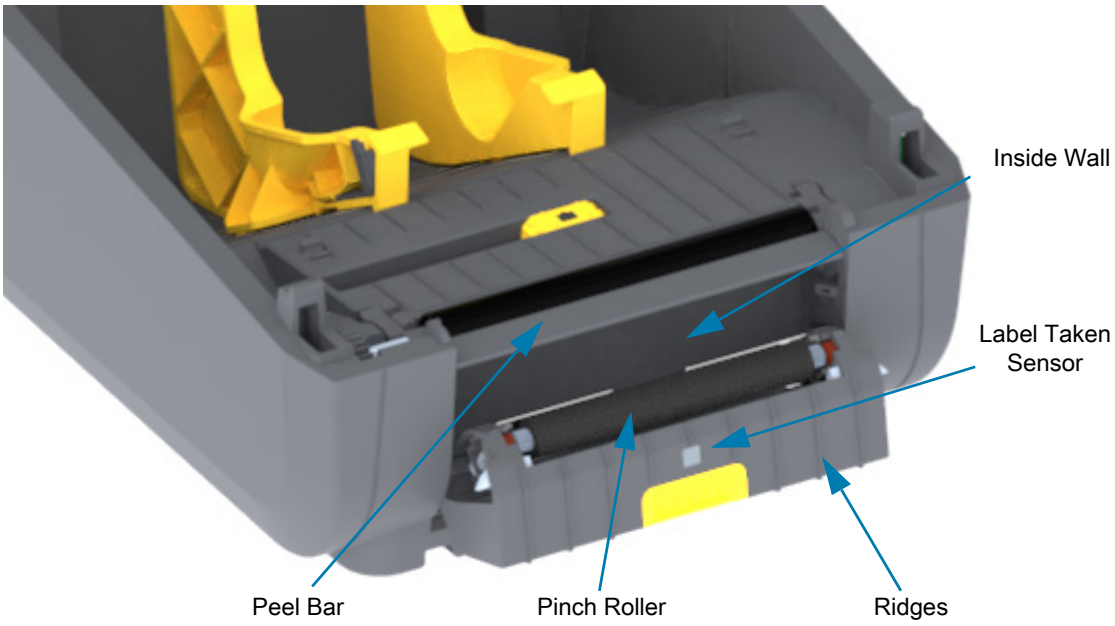

Sensor Cleaning

Dust can accumulate on the media sensors. Use a can of compressed air. Do not use an air compressor to remove dust. Compressors add moisture, fine grit, and lubricant which can contaminate your printer.

1. Clean the Movable Sensor's window. Gently brush away dust or use a can of compressed air; if necessary, use a dry swab to brush away dust. If adhesives or other contaminants remain, use an alcohol moistened swab to break it up.
2. Use a dry swab to remove any residue that may be left from the first cleaning.
3. Repeat steps 1 and 2 as required until all residue and streaks are removed from the sensor.

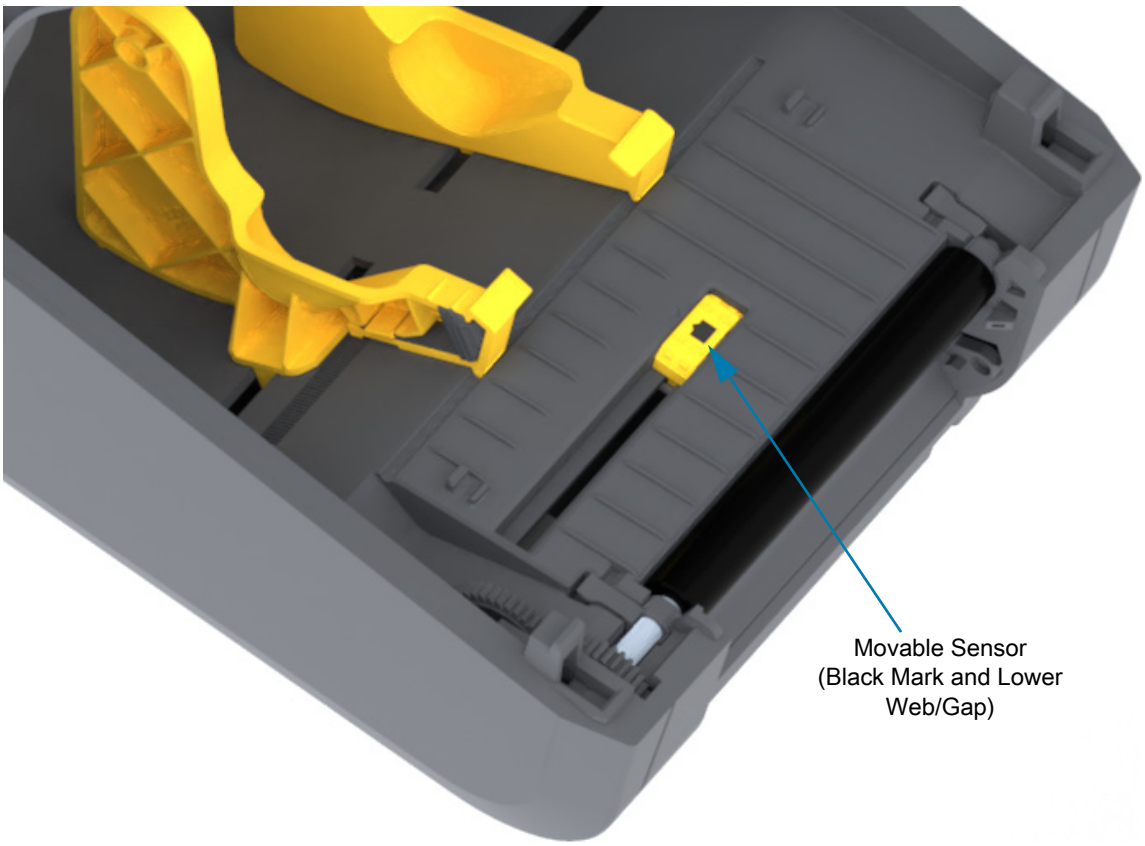

Platen Cleaning and Replacement

The platen (drive roller) normally does not require cleaning. Normally, paper and liner dust can accumulate without affecting print operations.

Clean the platen (and media path) whenever the printer has significantly poorer performance, print quality or media handling. The platen is the print surface and drive roller for your media. If sticking or jamming continues even after cleaning, you must replace the platen.

Important • Contaminants on the platen roller can damage the printhead or cause the media to slip or stick when printing. Adhesive, dirt, general dust, oils and other contaminants should be cleaned immediately off the platen.

Removing the Platen Roller

The platen can be cleaned with a fiber-free swab (such as a Texpad swab) or a lint free, clean, damp cloth very lightly moistened with medical grade alcohol (90% pure or better).

1. Open the cover (and dispenser door, if the dispenser is installed). Remove media from platen area.
2. Pull the platen bearing latch release tabs on the right and left sides towards the front of the printer and rotate them up.

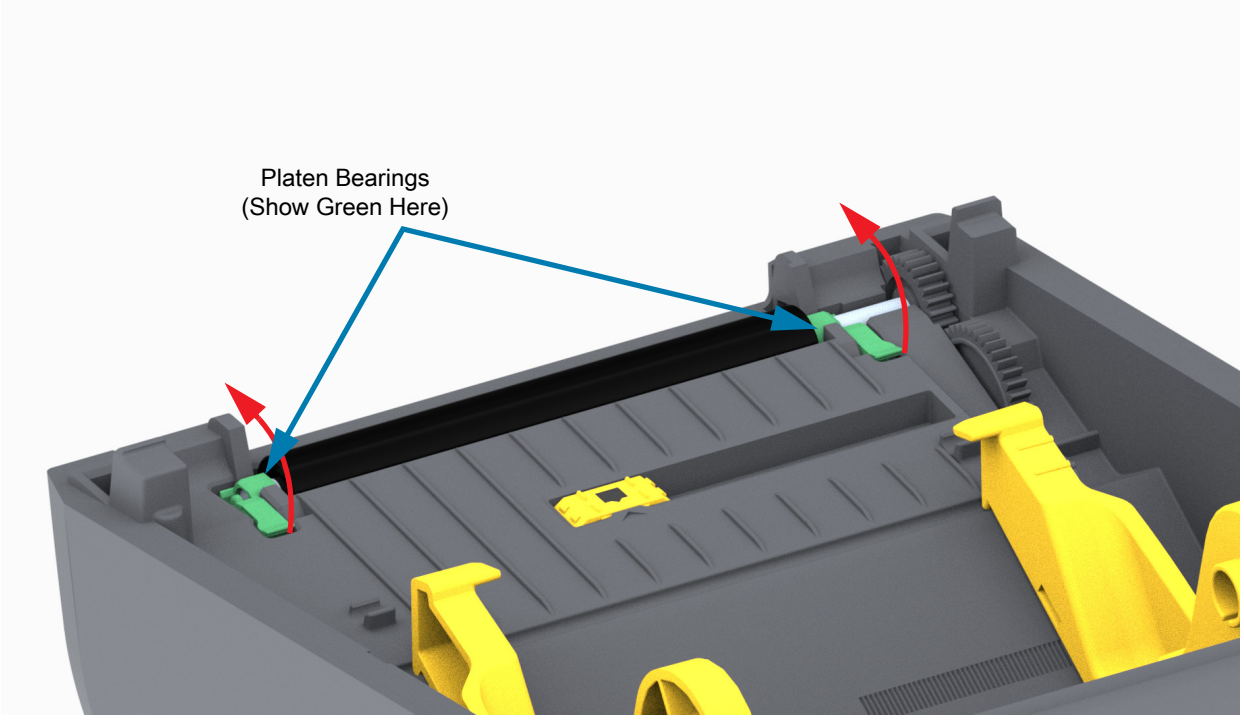

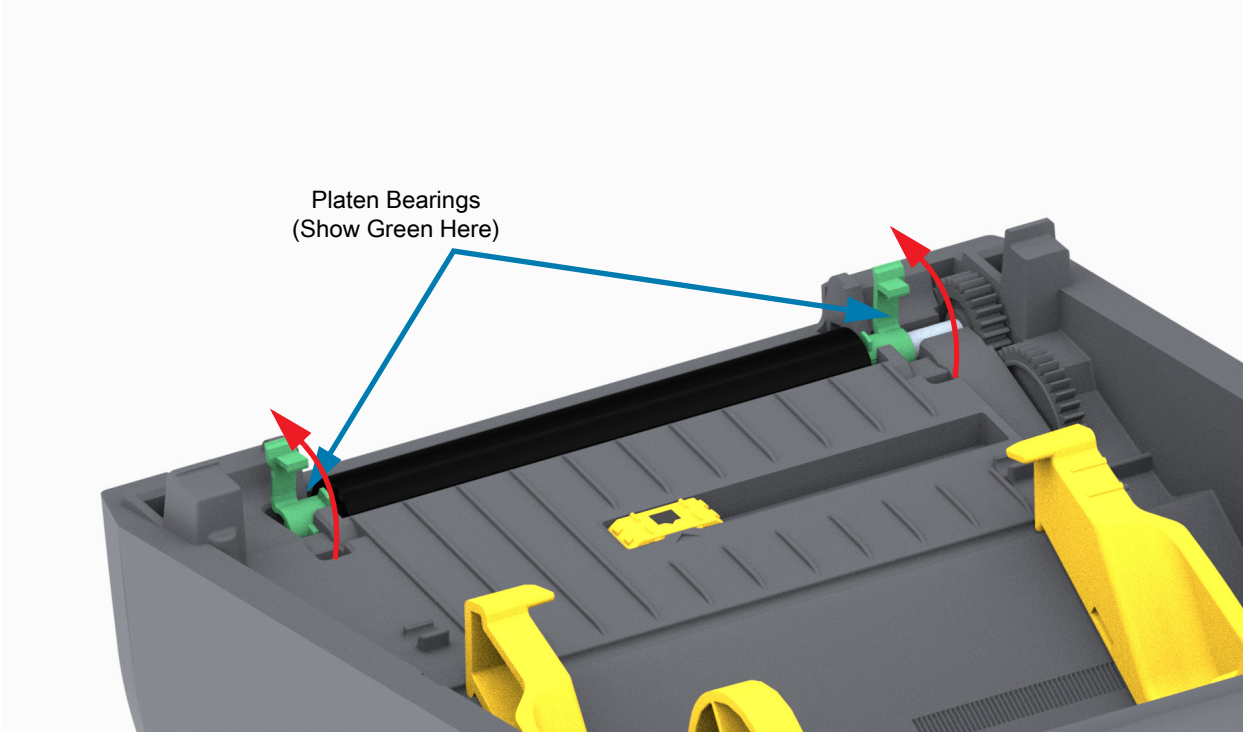

3. Lift the platen out of the printer's bottom frame.

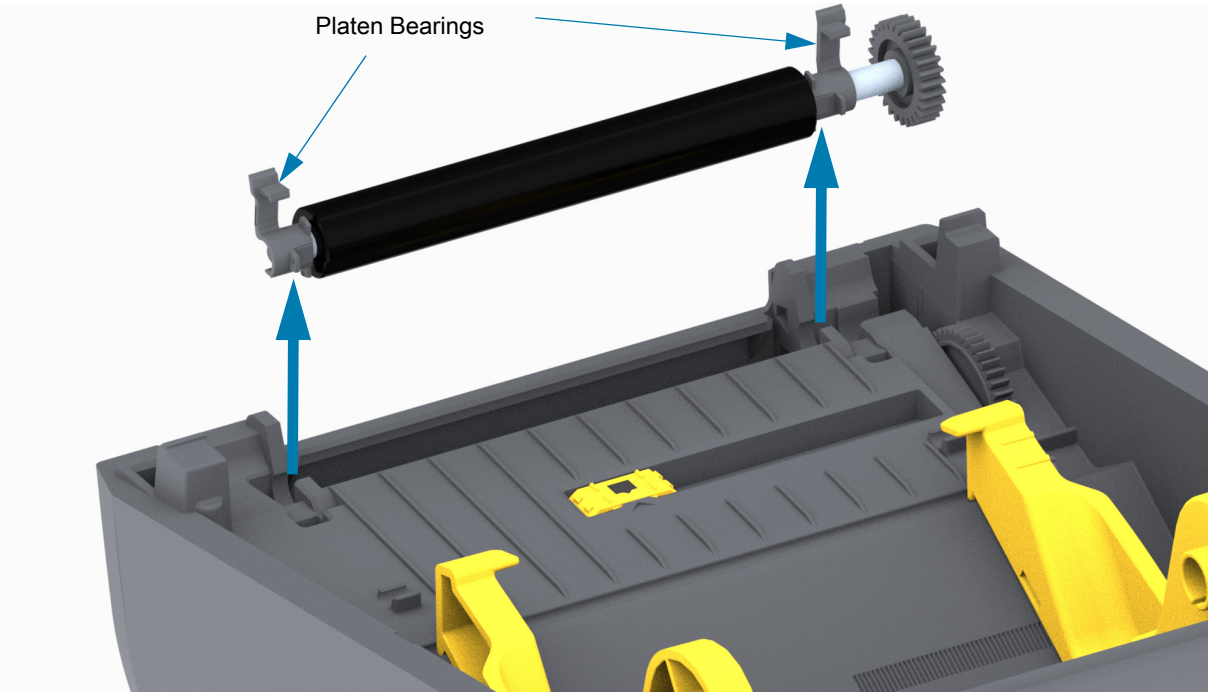

4. Slide the gear and the two (2) bearings off the shaft of the platen roller.

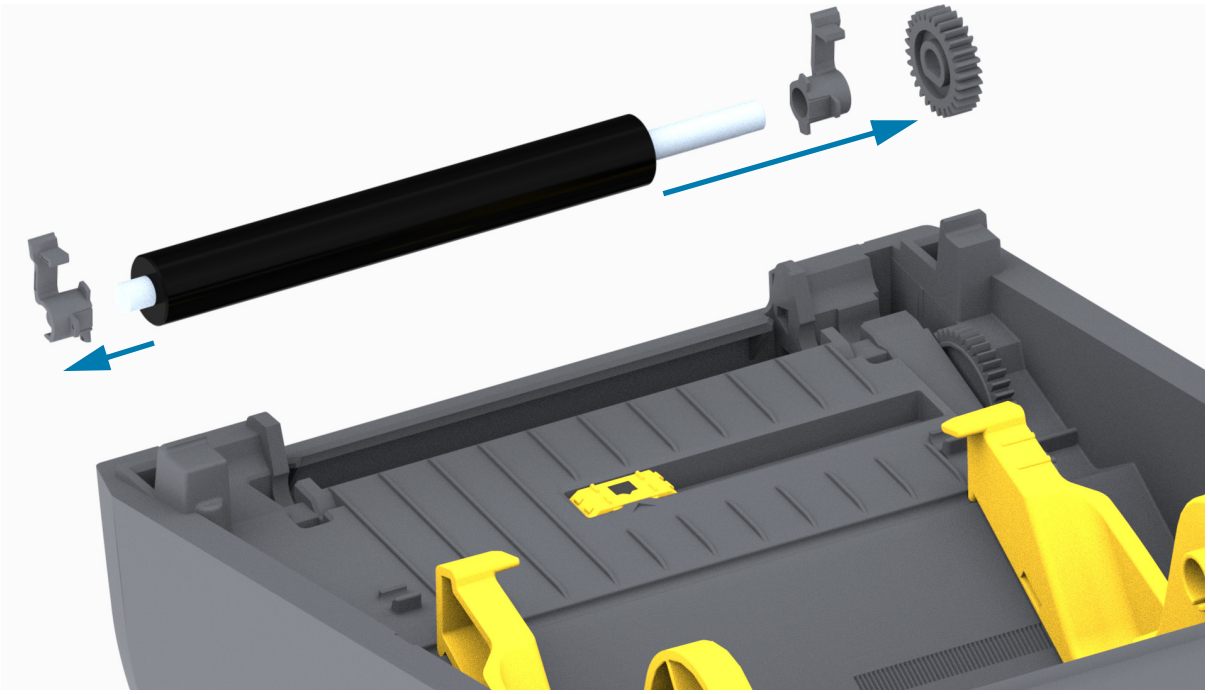

5. **Cleaning Only** — Clean the platen with the alcohol moistened swab. Clean from the center out. Repeat this process until all of the roller surface has been cleaned. If there has been heavy adhesive build-up or label jam, repeat with a new swab to remove residual contaminants. Adhesives and oils, for example, may be thinned by the initial cleaning but not completely removed.
6. Discard the cleaning swabs after use - do not reuse.
7. Make sure the bearings and drive gear are on the shaft of the platen roller.

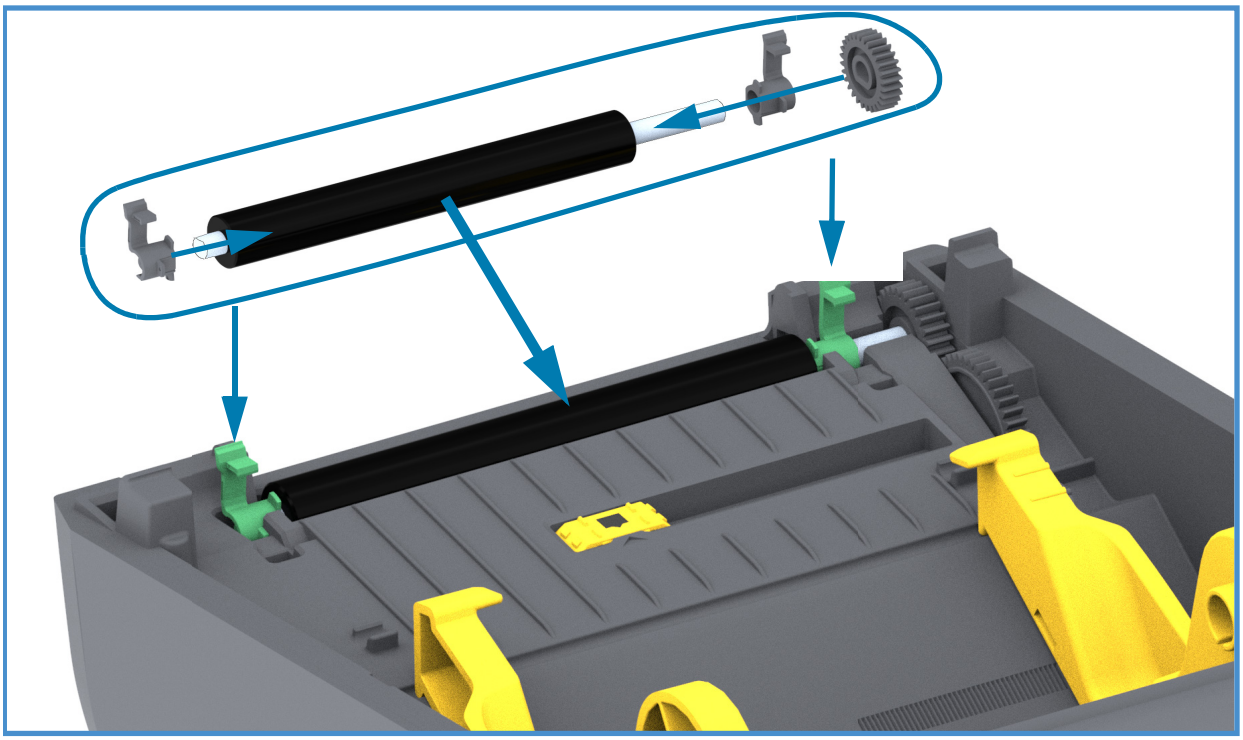

8. Align the platen with the gear to the left and lower it into the printer's bottom frame.
9. Rotate the platen bearing latch release tabs down on the right and left sides towards the rear of the printer and snap them into place.
10. Allow the printer to dry for one minute before closing the dispenser door, media cover or loading labels.

Updating Printer Firmware

The printer's firmware may need to be updated periodically to get new features, improvements, and printer upgrades for media handling and communications.

Use Zebra Setup Utilities (ZSU) to load new firmware.

1. Open Zebra Setup Utilities.
2. Select your installed printer.
3. Click on the 'Open Printer Tools' button and a 'Tools' window will open.
4. Click on the 'Action' tab.
5. Load the printer with media. See Loading Roll Media.
6. Click on the text line - 'Send file'. The lower half of the window will present a filename and path with a Browse (...) button to select the latest firmware file you have downloaded from the Zebra Web site.
7. Observe the user interface and wait. If the firmware version is different than the version installed on the printer, the firmware will download to the printer. The STATUS Indicator will flash green while the firmware is downloading. The printer will restart and begin to install the firmware. When the firmware update has completed, the STATUS Indicator will display solid Green as the firmware is validated and installed. A printer Configuration Report is automatically printed and the firmware update has been completed.

Other Printer Maintenance

There are no user level maintenance procedures beyond those detailed in this section. See the Troubleshooting for more information on diagnosing printer and print problems.

Fuses

There are no replaceable fuses in these printers or power supplies.

Troubleshooting

This section provides troubleshooting procedures and information.

Resolving Alerts and Errors

Alert: Media Path

Printhead Open

A print command or a FEED button has been pressed and the printer has detected that the printhead (cover) is not closed.

Possible Cause - 1

The cover is open or has not been closed properly.

Resolution Close the cover/printhead. Push down on the front top corners of the printer's cover. You should normally hear and feel the cover latches snap in place to lock the cover closed for printing.

See Opening and Closing the Printer.

Possible Cause - 2

Resolution Contact your Zebra partner or Zebra Tech Support for assistance.

Media Out

A print command, a FEED button has been pressed, or you are printing; and the printer can not detect media in the print path.

Possible Cause - 1

There is no media (roll) in the printer.

Resolution Load your chosen media in the printer and close the printer. You may need to press the FEED button once or the PAUSE button the get the printer to resume your print operation. See Loading Roll Media.

Possible Cause - 2

Open the printer: If there is a missing label on the roll between two labels at the end of a roll of labels, then this is the method used by the label roll manufacture to identify the end of the roll. See Detecting a Media Out Condition.

Resolution Replace the empty media roll and continue printing. Do not power the print off or you will loose your print job. See Detecting a Media Out Condition.

Possible Cause - 3

Misaligned movable media sensor.

Resolution Check the position of the movable media sensor. See Using the Movable Sensor.

The printer may need to be calibrated for the media after the adjusting the sensor location. See Run a SmartCal Media Calibration.

Possible Cause - 4

The printer is set for noncontinuous (labels or black mark) media, but continuous media is loaded.

Resolution Check the position of the media sensor is in the center default location. See Using the Movable Sensor.

The printer may need to be recalibrated for the media after the adjusting the sensor location. See Run a SmartCal Media Calibration.

Possible Cause - 5

The media sensor is dirty.

Resolution Clean the Upper Web (Gap) Sensor Array and the lower Movable Media sensors. See Sensor Cleaning.

Reload your media, adjust the Movable Media sensor's position for your media, and recalibrate the printer for the media. See Loading Roll Media and Run a SmartCal Media Calibration.

Possible Cause - 6

The media sensing is not working. Possible data corruption of memory or faulty components.

Resolution Reload the printer's firmware. See Updating Printer Firmware.

Resolution Contact your Zebra partner or Zebra Tech Support for assistance.

CUT ERROR

The cutter blade is bound and is not moving properly

Possible Cause - 1

Media, adhesive, or external object has stopped the cutter blade from operating.

Resolution 1Turn the printer off by holding the power using the POWER button down for 5 seconds. Wait for thee printer to shutdown completely. Turn the printer on.

Resolution Contact your Zebra partner or Zebra Tech Support for assistance.

Cut Warning • There are no operator serviceable parts in the cutter unit. Never remove the cutter cover (bezel). Never attempt to insert objects or fingers in to the cutter mechanism.

Note • Using unapproved tools, cotton swabs, solvents (including alcohol), etc. all may damage or shorten the cutter's usable life or cause the cutter to jam.

Alert: PRINTHEAD OVER TEMP

The printhead is over temperature and paused to allow the printhead to cool.

Possible Cause - 1

The printer is printing a large batch job, typically with large amounts of print.

Resolution The print operation will resume after the printhead has cooled.

Possible Cause - 2

The ambient temperature at the printers location exceeds the specified operating range. Sometimes, ambient temperatures in the printer can be higher if it is in direct sunlight.

Resolution Move the printer location or cool ambient temperature where the printer is operating.

Alert: PRINTHEAD SHUTDOWN

The printhead is below operating temperature for proper printing.

Possible Cause - 1

Printhead has had a critical temperature or power failure

Resolution Turn the printer off by holding the power using the POWER button down for 5 seconds. Wait for thee printer to shutdown completely. Turn the printer on.

Resolution Contact your Zebra partner or Zebra Tech Support for assistance.

Alert: PRINTHEAD UNDER TEMP

The printhead is below operating temperature for proper printing.

Possible Cause - 1

The ambient temperature at the printers location is below the specified operating range.

Resolution Turn the printer off. Move the printer location and wait for it to warm naturally. Moisture may condense in and on the printer if the temperature changes too quickly.

Possible Cause - 2

The printhead thermistor has failed.

Resolution Turn the printer off by holding the power using the POWER button down for 5 seconds. Wait for thee printer to shutdown completely. Turn the printer on.

Resolution Contact your Zebra partner or Zebra Tech Support for assistance.

Resolving Print Issues

This section helps you identify issues with printing or print quality, the possible causes, and the recommended solutions.

Issue: General Print Quality Issues

The printed image does not look right.

Possible Cause - 1

The printer is set at an incorrect darkness level and/or print speed.

Resolution Adjust the printers Darkness setting. See Adjusting the Print Quality.

Possible Cause - 2

The printhead is dirty.

Resolution Clean the printhead. See Cleaning the Printhead.

Possible Cause - 3

The platen roller is dirty or damaged.

Resolution Clean or replace the platen. Platens can wear out or get damaged. See Platen Cleaning and Replacement.

Possible Cause - 4

You may be using the wrong power supply.

Resolution Verify you are using the power supply that came with this printer.

Possible Cause - 5

The printhead has worn out.

Resolution Contact your Zebra partner or Zebra Tech Support for assistance.

Issue: No Print on the Label

The print image is not printing.

Possible Cause - 1

The media may not be direct thermal media (and is media made for thermal transfer printers).

Resolution See the test procedure, Determining Thermal Media Types.

Possible Cause - 2

Media has been loaded incorrectly.

Resolution The media printable surface must face up towards the printhead. See Getting Ready to Print followed by Loading Roll Media.

Issue: Labels Are Distorted in Size or Print Area Start Position Varies

Includes printed image that skips between labels (mis-registration).

Possible Cause - 1

Media has been loaded incorrectly or the movable media sensor is not set properly.

Resolution Verify that the sensor is set and positioned correctly for your media type and sensing location. See Loading Roll Media, Setting Media Sensing by Media type, and Using the Movable Sensor.

Possible Cause - 2

The media sensors are not calibrated for your media length, physical properties, or sensing type (gap/notch, continuous, or mark).

Resolution See Run a SmartCal Media Calibration.

Possible Cause - 3

The platen (drive) roller is slipping or damaged.

Resolution Clean or replace the platen. Platens can wear out or get damaged. See Platen Cleaning and Replacement.

Possible Cause - 4

The printer has communication issues with cables or communication settings.

Resolution See Communication Issues.

Communication Issues

This section identifies problems with communications, the possible causes, and the recommended solutions.

Issue: Label Job Sent, Data Transfers, But No Print

A label format was sent to the printer but was not recognized. The data was transfered but no printing occurs.

Possible Cause - 1

The prefix and delimiter characters set in the printer do not match the ones in the label format.

Resolution Verify the ZPL programmings prefix (COMMAND CHAR) and delimiter (DELIM./CHAR) characters. Configuration Setting to Command Cross-reference.

Possible Cause - 2

Incorrect data is being sent to the printer.

Resolution Check the label format. See the ZPL Programmer's Manual for details on printer programming.

Miscellaneous Issues

This section identifies miscellaneous issues with the printer, the possible causes, and the recommended solutions.

Issue: Settings are Lost or Ignored

Some parameters are set incorrectly.

Possible Cause - 1

Printer settings were changed without saving them.

Resolution

The ZPL **^JU** command was not used to save your configuration before turning the printer off. Cycle the printer OFF and then back ON to verify settings have been saved.

Possible Cause - 2

The label format/form commands or commands sent directly to the printer have syntax errors or have been used incorrectly.

- A firmware command turned off the ability to change the parameter.
- A firmware command changed the parameter back to default setting.

Resolution

See the ZPL programmer's guide to verify command usage and syntax. Use this link to get to your Online printer support resources:

ZD200 Series Direct Thermal Printer — www.zebra.com/zd200d-info

Possible Cause - 3

The prefix and delimiter characters set in the printer do not match the ones in the label format.

Resolution

Verify the ZPL programming settings of the Control, Command, and Delimiter communication character settings are correct for your system software environment. Print a Configuration Report to see these three (3) items and compare it the commands in label format/form you are trying to print. See Test Printing with the Configuration Report and ZPL Configuration.

Possible Cause - 4

The Main Logic board may not be working properly. Firmware is corrupted or the Main Logic board needs service

Resolution

1 — Reset the printer to factory defaults. See FEED Button Modes - Power ON. the Reset Factory Defaults or use the Zebra Setup Utility and Open **Printer Tools > Action > Load printer defaults.**

2 — Reload printer firmware. See Updating Printer Firmware.

3 — If the printer does not recover from this error, call a service technician. This is not a user serviceable item.

Issue: Non-continuous labels act as Continuous labels.

A non-continuous label format with matching media loaded in the printer, was sent to the printer but prints like it is continuous media.

Possible Cause - 1

The printer was not calibrated for the media being used.

Possible Cause - 2

The printer is configured for continuous media.

Resolution

Set the printer for the correct media type (gap/notch, continuous, or mark) and calibrate the printer using Run a SmartCal Media Calibration.

Issue: Printer Locks-Up

All indicator lights are on and the printer locks up or the printer locks up while restarting.

Possible Cause - 1

The printer memory has been corrupted by an unknown event.

Resolution - 1

1 — Reset the printer to factory defaults. See FEED Button Modes - Power ON - Reset Factory Defaults or use the Zebra Setup Utility and **Open Printer Tools > Action > Load printer defaults.**

2 — Reload printer firmware. See Updating Printer Firmware.

3 — If the printer does not recover from this error, call a service technician. This is not a user serviceable item.

Printer Diagnostics

Diagnostic reports, calibration procedures, restoring factory defaults and other diagnostics provide specific information about the condition of the printer.

Important • Use full-width media when performing self tests. If your media is not wide enough, the test labels may print on the platen (drive) roller.

Note • Diagnostic Testing Tips:

- When performing these self tests, do not send data to the printer from the host.
  If your media is shorter than the label to be printed, the test label continues on the next label.
- When canceling a self test prior to completion, always reset the printer by turning it OFF and then ON.
- If the printer is in dispense mode and the liner is being taken up by the applicator, the operator must manually remove the labels as they become available.

Each self test is enabled by pressing a specific user interface button or combination of buttons while turning ON the printer power. Keep the button(s) pressed until the first indicator light turns off. The selected self test automatically starts at the end of the Power-On Self Test.

Printer Network (and Bluetooth) Configuration Report

ZD-Series printers with Wired or Wireless connectivity options installed will print an additional printer configuration report. This information needed to establish and trouble shoot Ethernet (LAN and WLAN), and Bluetooth 4.1 network printing. The following printout is printed with the ZPL **~WL** command.

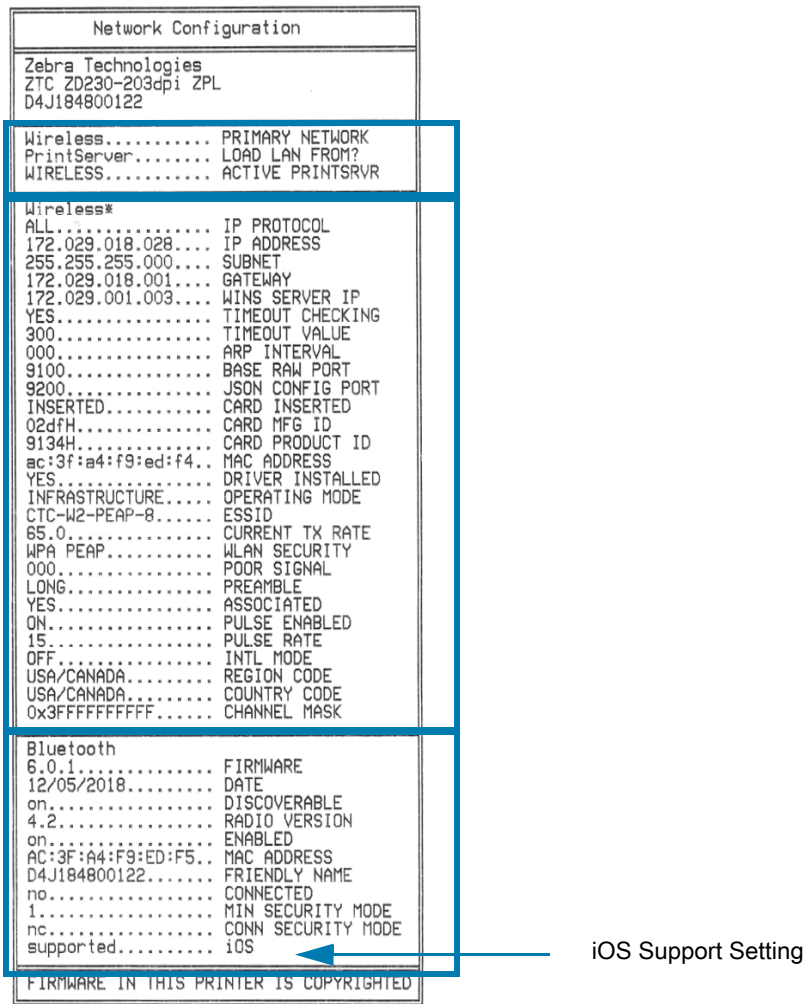

iOS Bluetooth Support

- iOS devices with factory wireless connectivity options installed in your printer are noted as ‘supported’ on the bottom of the Bluetooth Configuration report.

Manual Calibration

Manual calibration is recommended whenever you are using pre-printed media or if the printer will not correctly auto calibrate.

1. Make sure media is loaded. A good common label size is 4 by 6 inches.
2. Turn on the printer power.
3. Send the following command to the printer: **`! U1 do "ezpl.manual_calibration" ""`**

   See Sending Files to the Printer.
4. The printer will set the media sensor for the label backing being used. After it is done making this adjustment, the roll will automatically feed (advance) until a label is positioned at the printhead. A profile of the media sensor settings (similar to the example below) will print. Upon completion, the printer will save the new settings in memory and the printer is ready for normal operation.

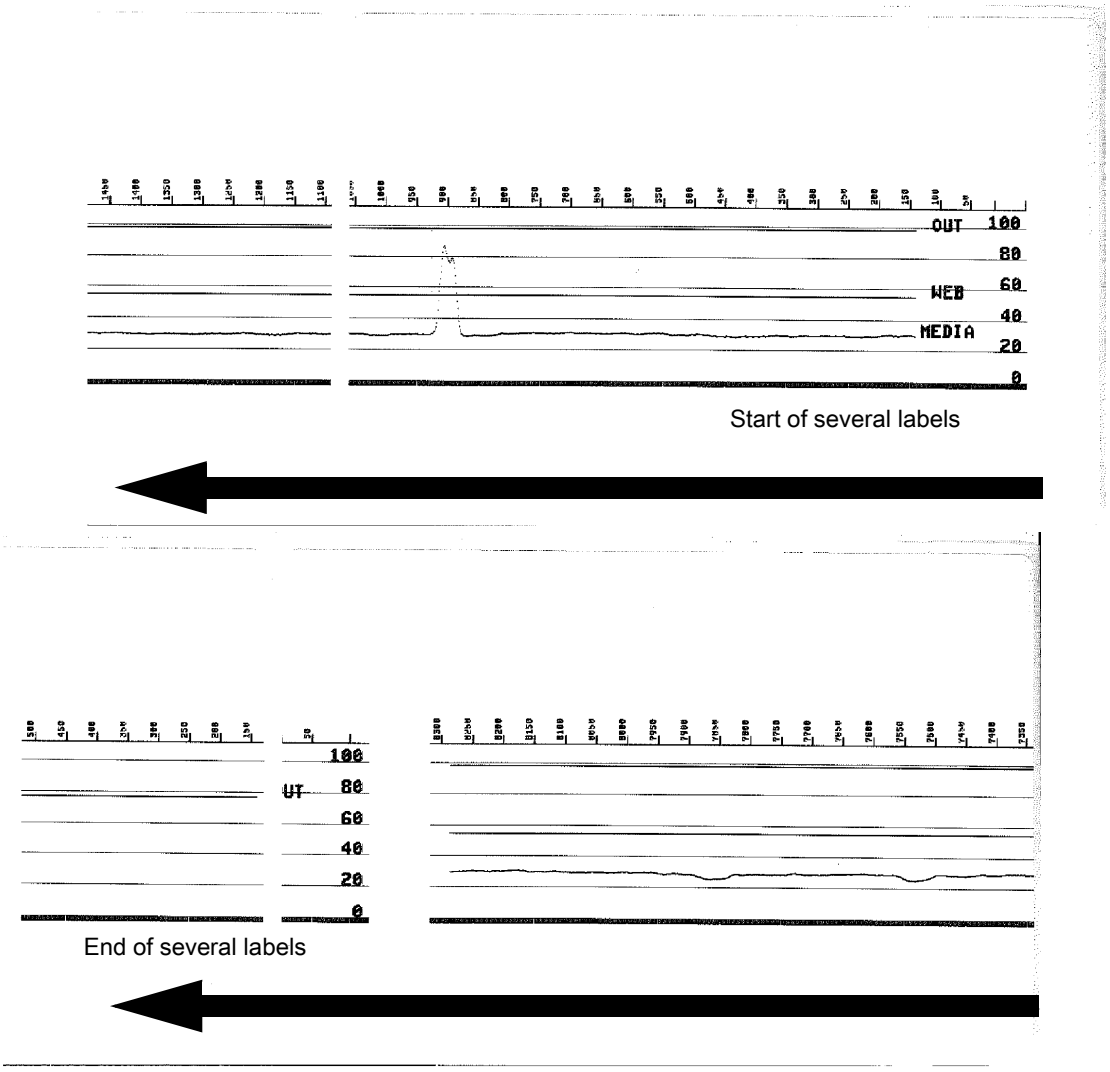

Communications Diagnostics

If there is a problem transferring data between the computer and printer, try putting the printer in the communications diagnostics mode. The printer will print the ASCII characters and their respective hexadecimal values (a sample is shown below) for any data received from the host computer. To find out how,

- There are multiple ways to enter hex data dump mode:
- The ~JD ZPL command
- The dump EPL command
- On Power Up with the FEED button pressed. Refer to the FEED Button Modes - Power OFF.
- Press the FEED button once to Exit

The printer will print 'Entering Diagnostic Mode' (see below).

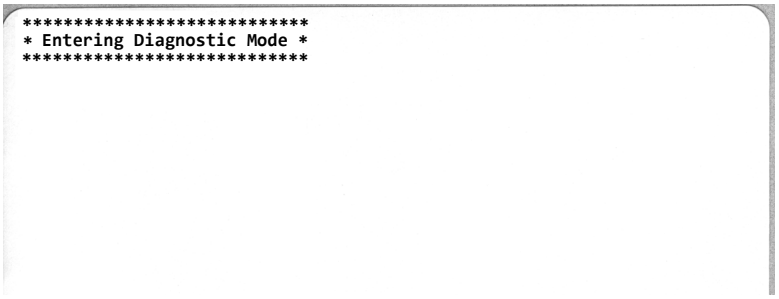

The following example of a communications Diagnostic mode printed out. The printout displays hexadecimal data 00h-FFh (0-255 decimal) with a unique character for each hexadecimal value displayed above the hexadecimal data.

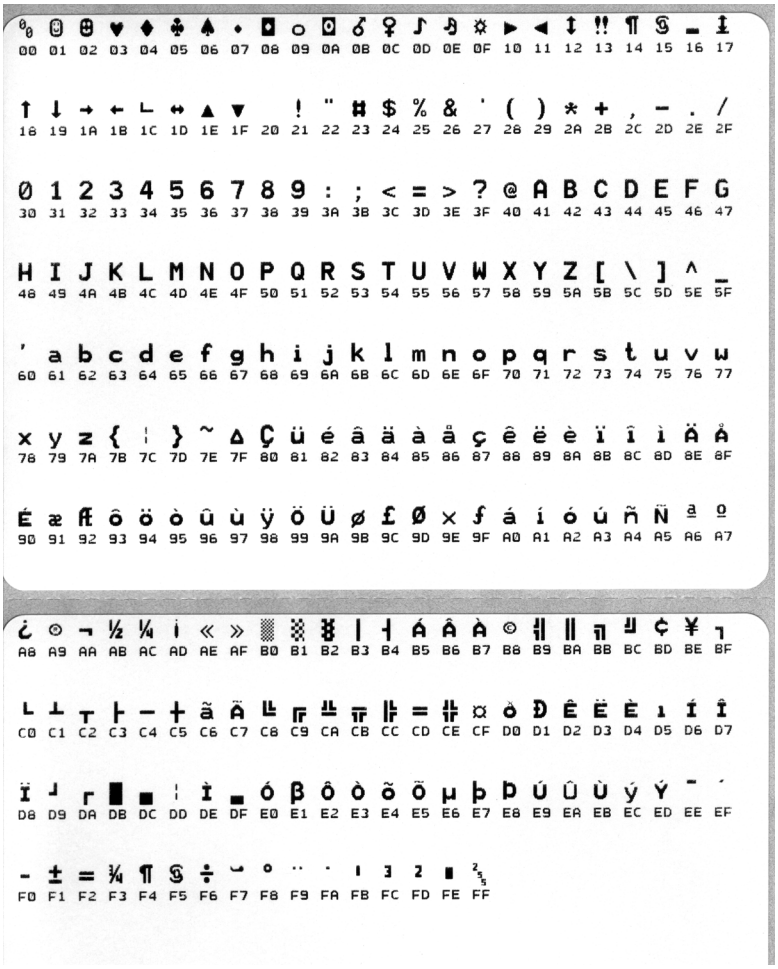

The blank lines between the lines of data are where serial port and Bluetooth data handling errors get logged. The errors are:

F = Frame Error

P = Parity Error

N = Noise Error

O = Data Overrun Error

To exit the diagnostic mode and resume printing, turn OFF and then turn ON the printer. An alternate method for exiting the diagnostic mode is to press the FEED button as many times as it takes to clear the printer's command buffer and print 'Out of Diagnostic mode' on the label.

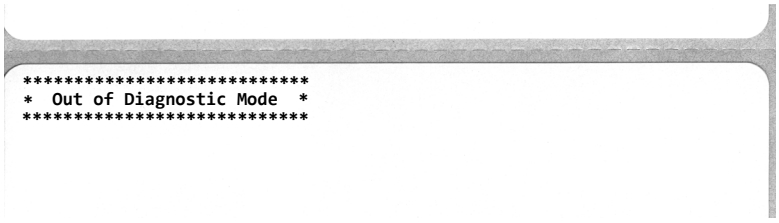

Interface Connector Wiring

Universal Serial Bus (USB) Interface

The figure below displays the cable wiring required to use the printer's USB two interfaces.

Important • When using third party cables, the printer requires USB cables or the cable packaging that bears the "Certified USB ™ " mark to guarantee USB 2.0 compliance.

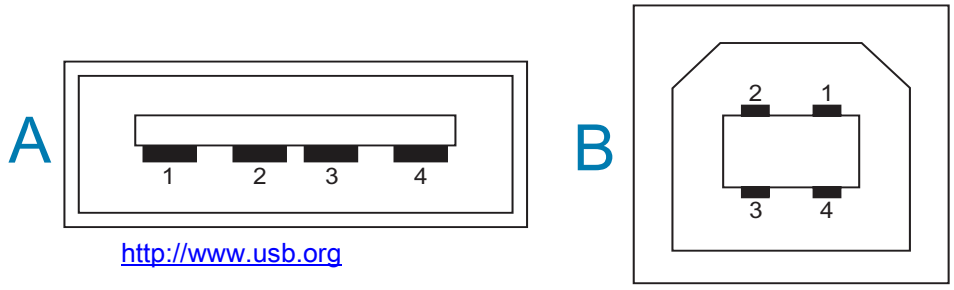

http://www.usb.org

Wiring - USB Connector "A" Style for "connecting to" the printer or device

Pin 1 — Vbus (+5VDC). (Pin 2 — D- (Data Signal, Negative Side)
Pin 3 — D+ (Data Signal, Positive Side)
Pin 4 — Shell (Shield/Drain Wire) Shell

Wiring - USB Connector "B" Style for "connecting to" the printer or device

Pin 1 — Vbus (Not Connected)
Pin 2 — D- (Data Signal, Negative Side)
Pin 3 — D+ (Data Signal, Positive Side)
Pin 4 — Shell (Shield/Drain Wire) Shell

Important • USB Host +5 VDC power source is shared with serial port phantom power. It is limited to 0.5mA per USB Specification and with on-board current limiting. The maximum current available through the serial port and USB port will not exceed a total of 0.75 Amps.

Dimensions

This section provides external printer dimensions.

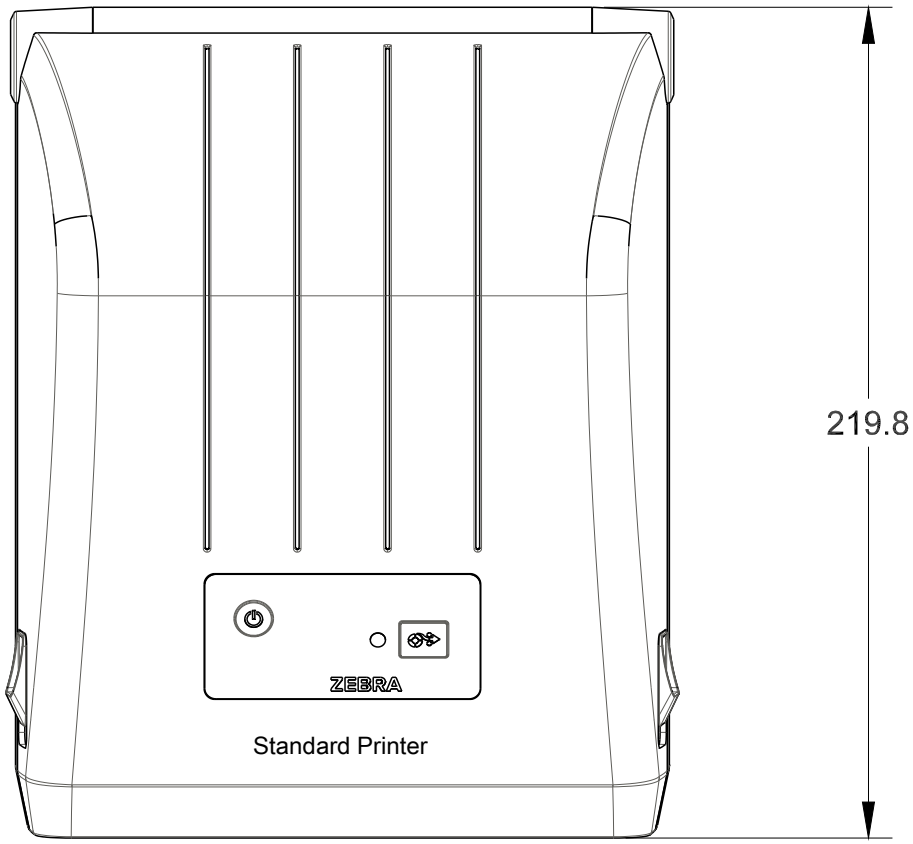

All dimension are in millimeters

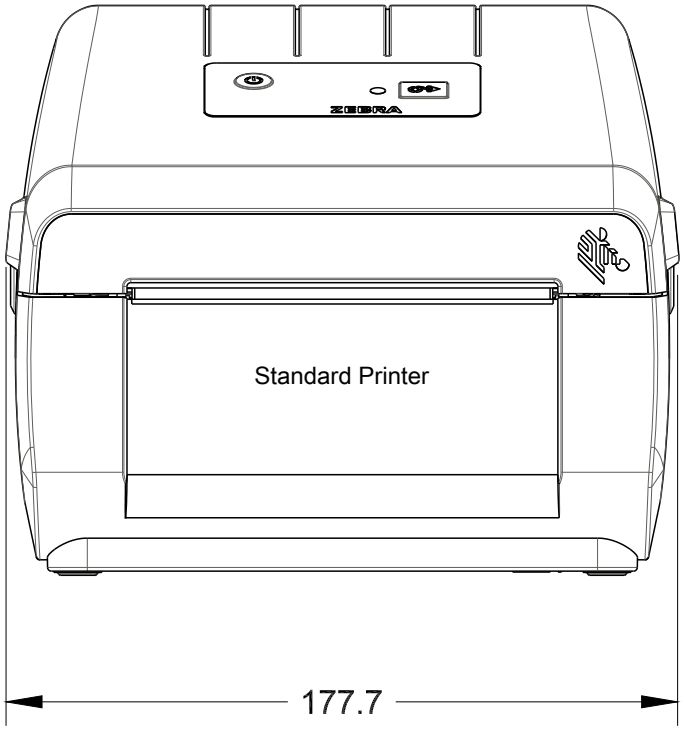

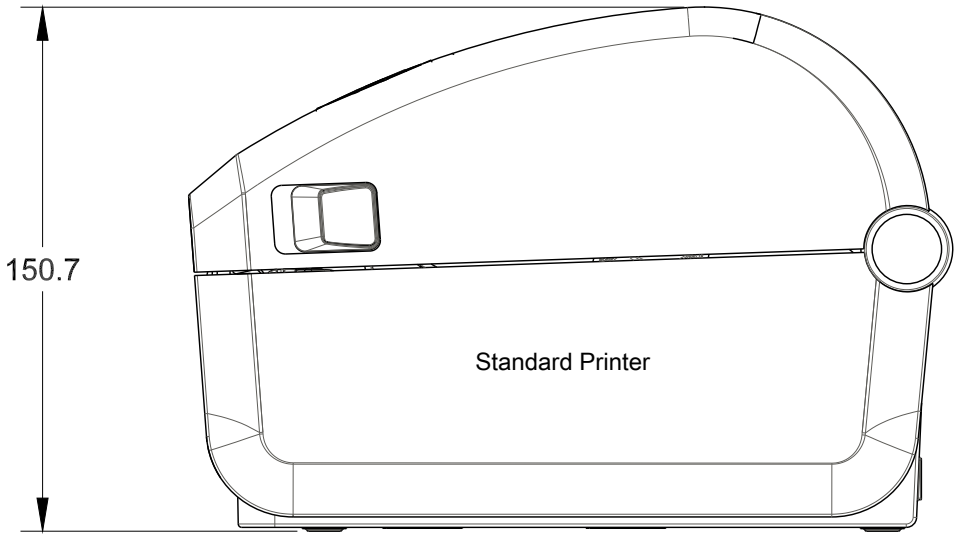

All dimension are in millimeters

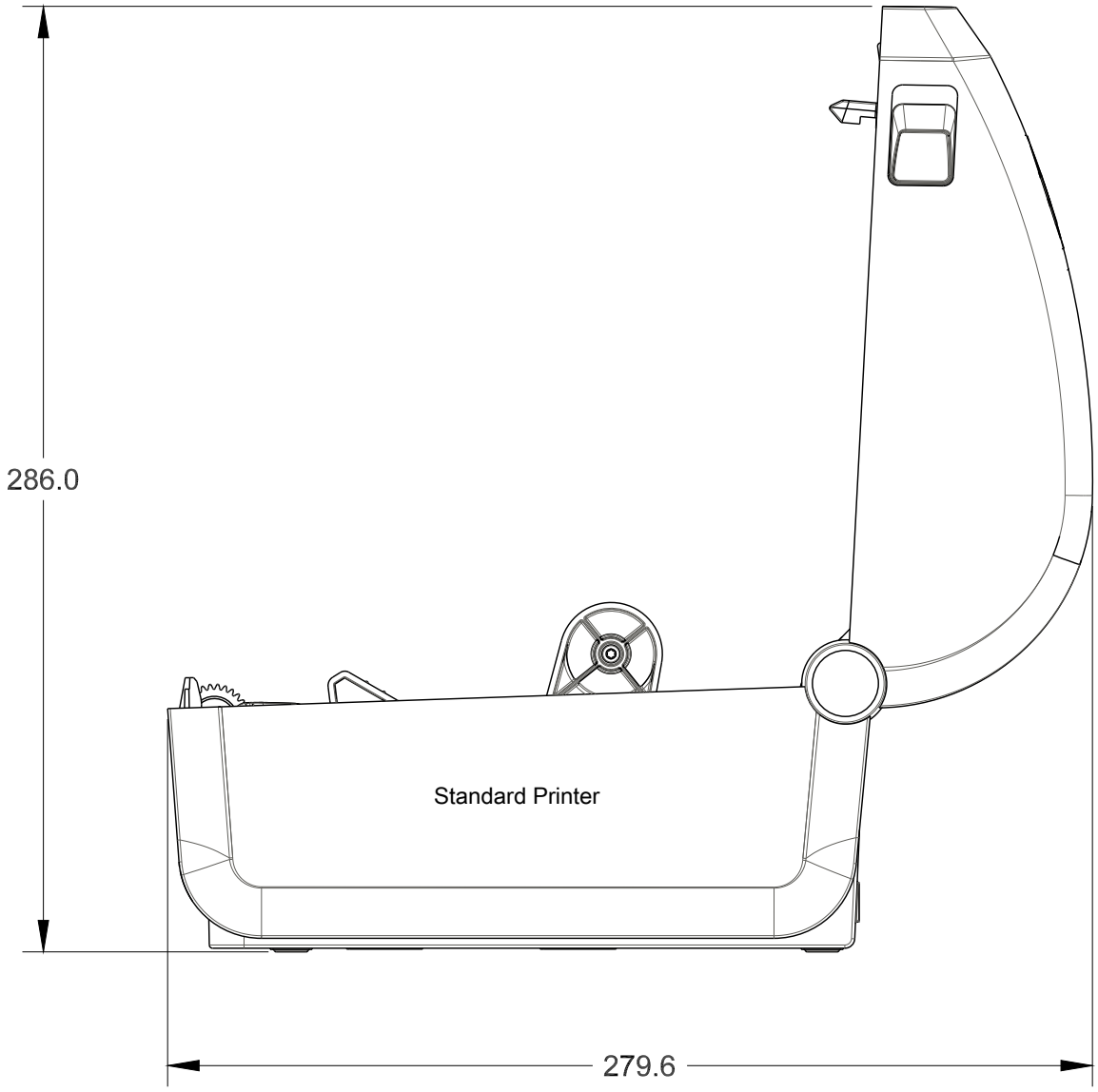

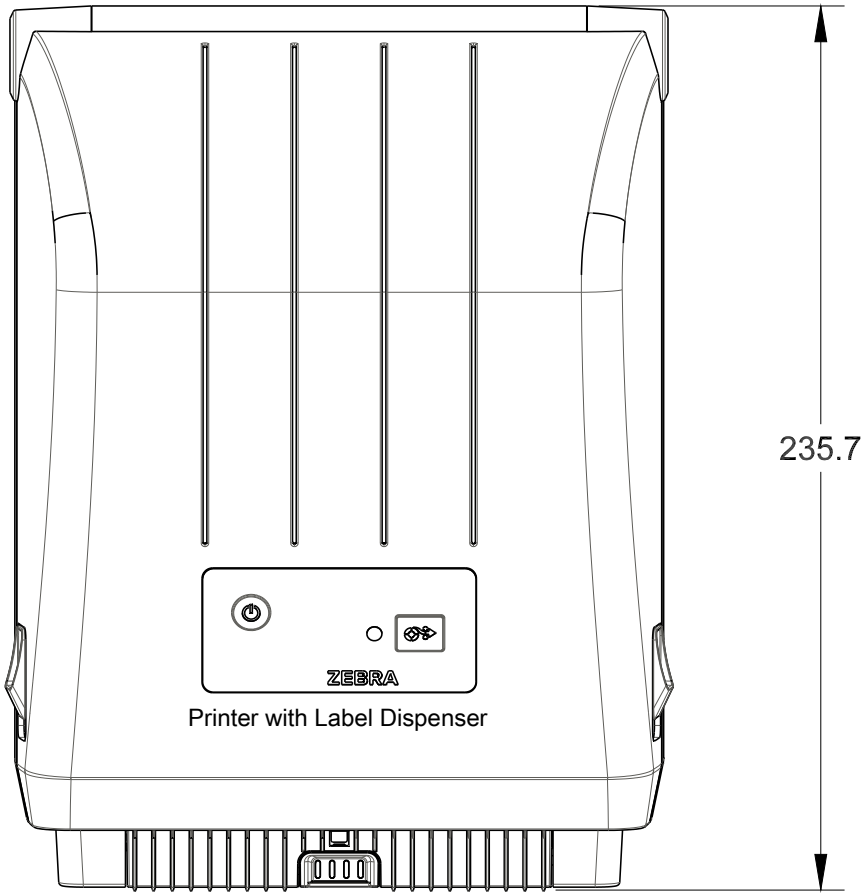

Printer with Label Dispenser

All dimension are in millimeters

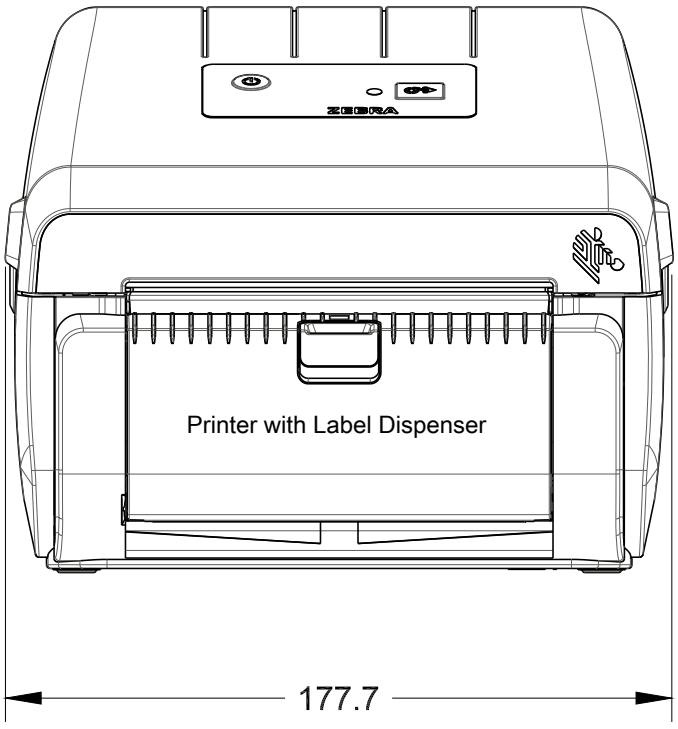

Printer with Label Dispenser

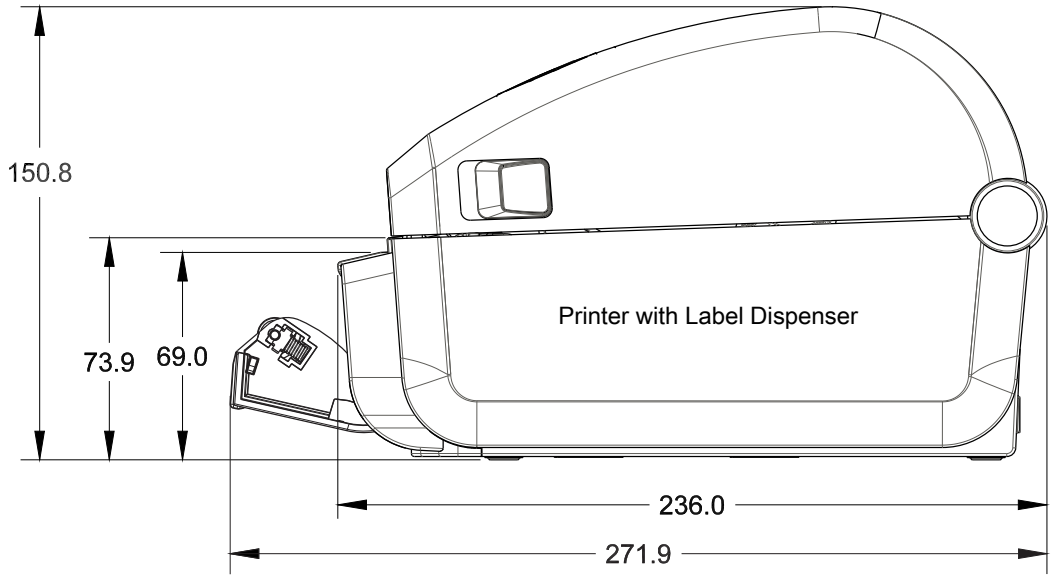
150.8
73.9
69.0
Printer with Label Dispenser
236.0
271.9

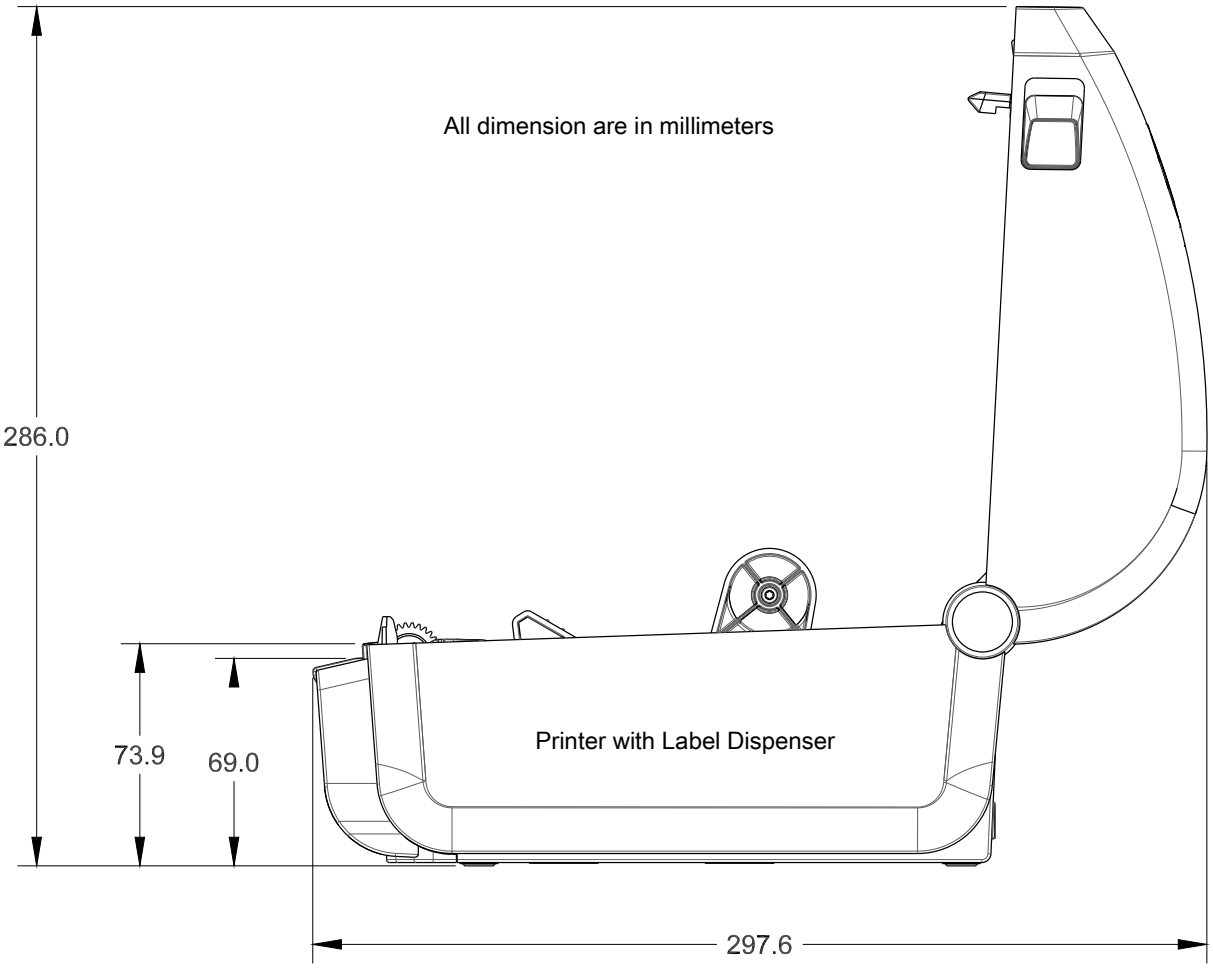
All dimension are in millimeters
286.0
73.9
69.0
Printer with Label Dispenser
297.6

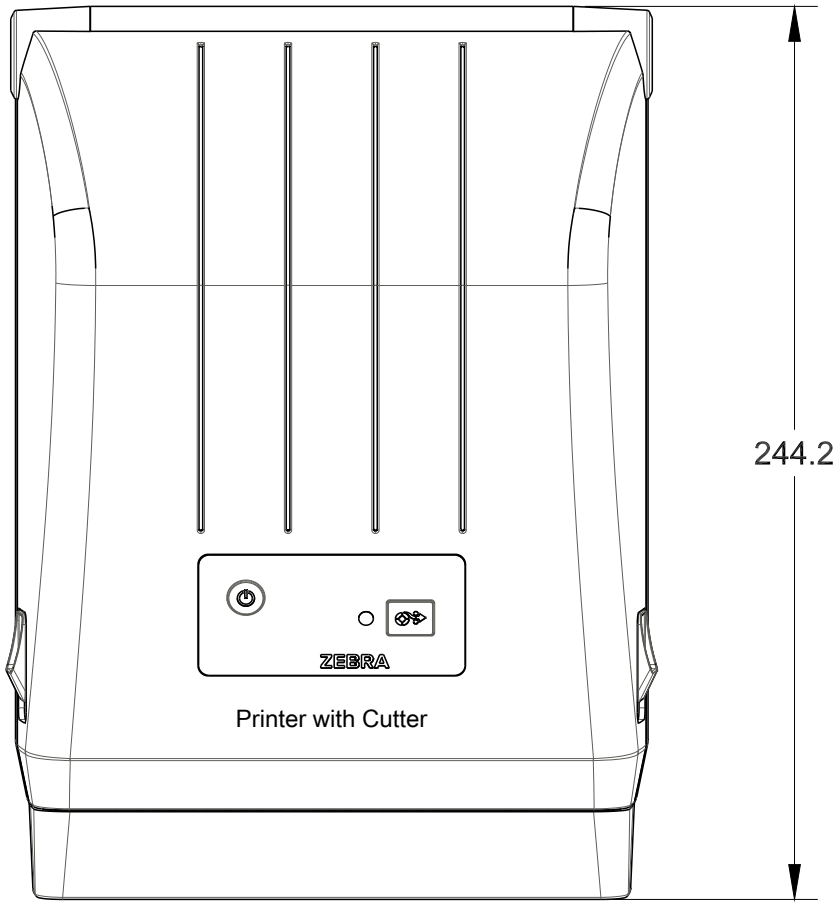

All dimension are in millimeters

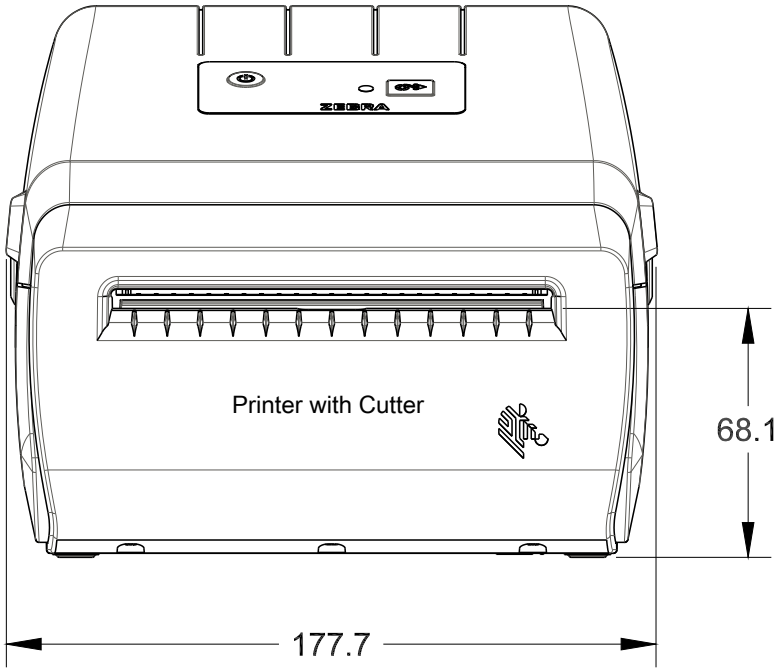

Media

This section provides a simple media overview for your printer.

Types of Thermal Media

Important • Zebra strongly recommends the use of Zebra-brand supplies in order to ensure consistent high-quality printing. A wide range of paper, polypropylene, polyester, and vinyl stock has been specifically engineered to enhance the printing capabilities of the printer and to prevent premature printhead wear.

To purchase supplies, go to http://www.zebra.com/howtobuy.

- Your printer can use various types of media:
- **Standard media**—Most standard (non-continuous) media uses an adhesive backing that sticks individual labels or a continuous length of labels to a liner.
- **Continuous roll media**—Most continuous roll media is direct thermal media (similar to FAX paper) and is used for receipt or ticket style printing.
- **Tag stock**—Tags are usually made from a heavy paper (up to 0.0075in./0.19mm thick). Tag stock does not have adhesive or a liner, and it is typically perforated between tags.

For more information on basic media types, see Table 1.

The printer typically uses roll media, but you can use fan-fold or other continuous media too.

Determining Thermal Media Types

Thermal transfer media requires ribbon for printing while direct thermal media does not. To determine if ribbon must be used with a particular media, perform a media scratch test.

To perform a media scratch test, complete these steps:

1. Scratch the print surface of the media with a finger nail or pen cap. Press firmly and quickly while dragging it across the media surface. Direct thermal media is chemically treated to print (expose) when heat is applied. This test method uses friction heat to expose the media.
2. Did a black mark appear on the media?

If a black mark...	Then the media is...
Appears on the media	**Direct thermal**. No ribbon is required.
Does not appear on the media	**Thermal transfer**. A ribbon is required. Not supported by this printer.

General Media and Print Specifications

- **Direct Thermal —** Max. Media width: 108mm (4.25 inches)
- **All Printers** — Min. Media width: 15mm (0.59 inches)
- Media length:
  - 990mm (39 inches) max.
  - 25.4mm (1.0 inch) min. - Tear Off, Peel, or Cutter
- Media thickness:
  - 0.06mm (0.0024 inches) min. – all requirements
  - 0.1905mm (0.0075 inches) max. – all requirements
- Media Roll Outer Diameter (O.D.) max.: 127mm (5.0 inches)
- Media Roll Core Inner Diameter (I.D.):
  - 12.7mm (0.5 inch) I.D. - Standard roll configuration
  - 25.4mm (1 inch) I.D. - Standard roll configuration
  - 38.1mm (1.5 inches) I.D. - with optional media roll adapter
- Dot pitch:
  - 203 dpi: 0.125mm (0.0049 inches)
- Barcode modulus x-dim:
  - 203 dpi: 0.005-0.050 inches

Label Dispenser (Peeler)

The printer supports a field installed label dispense option with label taken sensor for batch processing of labels.

- Paper Thickness:
  - Min. 0.06 mm (0.0024 inches)
  - Max. 0.1905 mm (0.0075 inches)
- Media Width:
  - Min.15 mm (0.585 inches)
  - Thermal Transfer Printers Max. 12mm (4.41 inches)
  - Direct Thermal Printers Max. 108mm (4.25 inches)
- Label Length:
  - All Printers Max. (theoretical): 990mm (39 inches)
  - Thermal Transfer Printers Max. (tested): 279.4mm (11 inches)
  - Direct Thermal Printers Max. (tested): 330mm (13 inches).
  - All Printers Min.: 12.7mm (0.5 inches).

Cutter

The printer supports a field installed media cutter option for full width cutting of label liner, tag or receipt media.

- A medium duty cutter for cutting label liner and light tag media (LINER/TAG). Do not cut through labels, adhesive or embedded circuitry.
- Paper Thickness:
  - Min. 0.06 mm (0.0024 inches)
  - Max. 0.1905 mm (0.0075 inches)
- Cut Width:
  - Min.15 mm (0.585 inches)
  - Thermal Transfer Printers Max. 12mm (4.41 inches)
  - Direct Thermal Printers Max. 108mm (4.25 inches)
- Minimum distance between cuts (label length): 25.4 mm (1 inch). Cutting shorter media lengths between the cuts may cause the cutter to jam or error.
- By design, the cutter is self cleaning and does not require preventive maintenance of the internal cutter mechanism.

Table 1 Types of Media Roll and Fanfold Media

Media Type	How It Looks	Description
Non-Continuous Roll Media	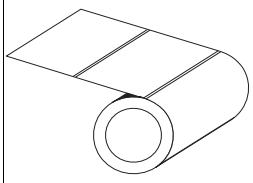	Labels have adhesive backing that sticks them to a liner. Tags (or tickets) are separated by perforations. Individual labels or tags are tracked and position controlled by one or more of the following methods: 1. Web media separates labels by gaps, holes, or notches. 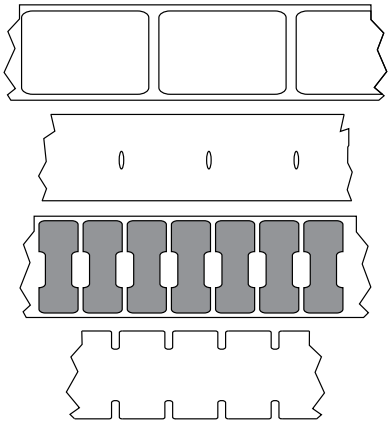 2. Black mark media uses pre-printed black marks on the back side of the media to indicate label separations. 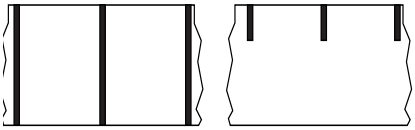 3. Perforated media has perforations that allow the labels or tags to be separated from each other easily in addition to position control marks, notches or label gaps. 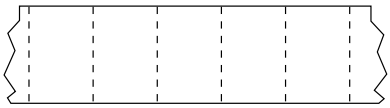
Non-Continuous Fanfold Media	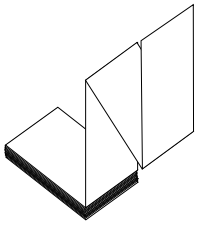	Fan-Fold media is folded in a zigzag pattern. Fanfold media can have the same label separations as non-continuous roll media. The separations would fall on or near the folds. This type of media uses black marks or notches to track media format positioning.
Continuous Roll Media	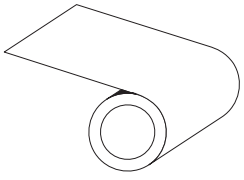	Continuous roll media does not have gaps or typically holes, notches, or black marks either to indicate label separations. This allows the image to be printed anywhere on the label. A cutter can be used to cut apart individual labels. With continuous media, use the transmissive (gap) sensor so the printer can detect when the media runs out.

ZPL Configuration

This section provides an overview of managing printer configuration, the Configuring Status Report, and Printer and Memory Printouts.

Managing the ZPL Printer Configuration

The ZPL printer is designed to allow you to change printer settings dynamically for fast first label out printing. Printer parameters that are persistent will be retained for future formats to use. Those settings will remain in effect until they are changed by subsequent commands, the printer is reset, power is cycled, or when you restore a parameter that has a factory default by resetting the printer to factory defaults. The ZPL Configuration Update command (**^JU**) saves and restores printer configurations to initialize (or re-initialize) the printer with pre-configured settings.

- To keep settings after a power cycle or printer reset, a **^JUS** can be sent to the printer to save all current persistent settings.
- The values are recalled with a **^JUR** command to restore the last saved values to the printer.

ZPL stores all parameters at once with a single command mentioned above. The legacy EPL programming language (supported by this printer) changes and saves individual commands immediately. Most printer settings are shared between ZPL and EPL. For example, changing the speed setting with EPL will also change the speed set for ZPL operations. The changed EPL setting will persist even after a power cycle or reset issued by either printer language.

A printer Configuration Report is available to assist the developer. The Configuration Report lists operating parameters, sensor settings, and printer status. It can be accessed by using the procedure in Test Printing with the Configuration Report. The Zebra Setup Utility and the ZebraDesigner ™ Windows driver also print this report and other printer reports to help you manage your printer.

ZPL Printer Configuration Format

Managing more than one printer can be done by creating a printer configuration programming file to send to one or more printers or ZebraNet ™ Bridge can be used to clone a printer's setup. Figure 1 below shows the basic structure of a ZPL programming configuration file.

See the ZPL programmer's guide and the Configuration Setting to Command Cross-reference to create a programming file. The Zebra Setup Utility (ZSU) can be used to send programming files to the printer. Windows Notepad (text editor) can be used to create programing files.

Figure 1 • Configuration Parameter Format Structure

^XA — Start Format Command

Format Commands are order sensitive
a) General Print and command settings
b) Media handling and behaviors
c) Media print size
^ JUS command to save

^XZ — End Format Command

Configuration Setting to Command Cross-reference

The Printer Configuration Report, shown below, provides a listing of a majority of the configurations settings that can be set by ZPL command.

Figure 2 • Configuration Report Printout

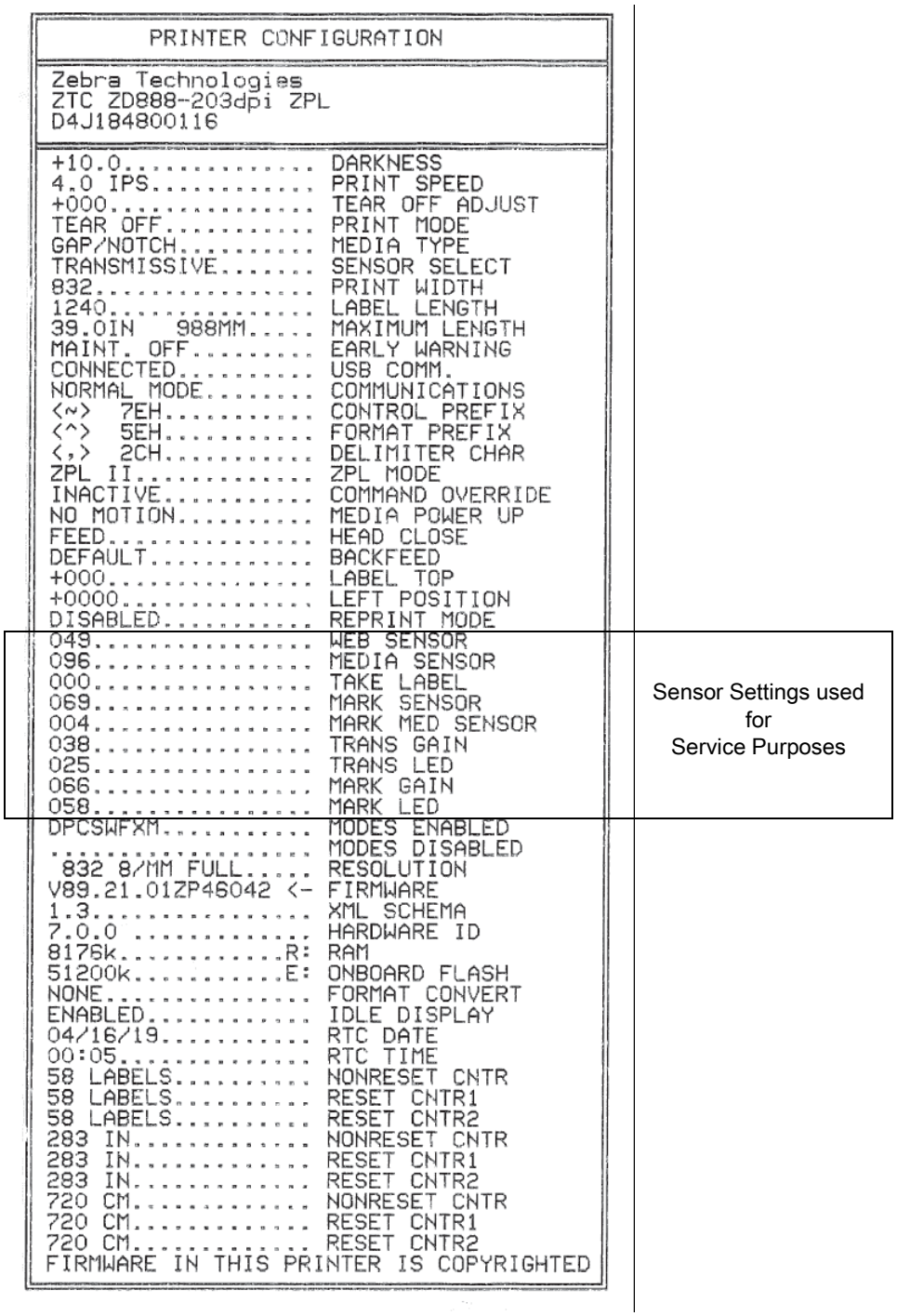

Table 1 ZPL Commands and Configuration Report Callout Cross-Reference

Command	Listing Name	Description
~SD	DARKNESS	Default: 10.0
^PR	PRINT SPEED	Default: 102 mm/s / 4 IPS 152 mm/s / 6 IPS (max.)
~TA	TEAR OFF	Default: +000
^MN	MEDIA TYPE	Default: GAP/NOTCH
	SENSOR SELECT	Default: AUTO (**^MNA** - Auto-Detect)
^PW	PRINT WIDTH	Default: 832 (dots for 203 dpi)
^LL	LABEL LENGTH	Default: 1230 (dots) (dynamically updated while printing)
^ML	MAXIMUM LENGTH	Default: 39.0IN 989MM
–	USB COMM.	Connection Status: Connected / Not Connected
– SGD –**	COMMUNICATIONS	Default: NORMAL MODE
^CT / ~CT	CONTROL CHAR	Default: <~> 7EH
^CC / ~CC	COMMAND CHAR	Default: <^> 5EH
^CD / ~CD	DELIM./CHAR	Default: <,> 2CH
^SZ	ZPL MODE	Default: ZPL II
– SGD –**	COMMAND OVERRIDE	Default: INACTIVE
^MFa	MEDIA POWER UP	Default: NO MOTION
^MF,b	HEAD CLOSE	Default: FEED
~JS	BACKFEED	Default: DEFAULT
^LT	LABEL TOP	Default: +000
^LS	LEFT POSITION	Default: +0000
	REPRINT MODE	Default: DISABLED

From this point in the Configuration Receipt listing, the printout has sensor settings and values displayed to troubleshoot sensor and media operations. These are typically used by Zebra Tech Support to diagnose printer problems.

** - Not supported with a ZPL command, uses the Set Get Do command in the ZPL manual. See **device.command_override.xxxxx** in the ZPL Programmer's manual.

The configuration settings listed here resume after the **TAKE LABEL** sensor value. These listings contain printer features seldom changed from default or provide status information.

Table 2 ZPL Commands and Configuration Receipt Callout Cross-Reference

Command	Listing Name	Description
^MP	MODES ENABLED	Default: DPCSWFXM (See **^MP** Command)
	MODES DISABLED	Default: (nothing set)
^JM	RESOLUTION	Default: 832 8/mm (203 dpi)
–	FIRMWARE	Lists ZPL Firmware Version
–	XML SCHEMA	1.3
–	HARDWARE ID	Lists Firmware Boot-block Version
–	CONFIGURATION	CUSTOMIZED (after first use)
–	RAM	8176k..... R:
–	ONBOARD FLASH	51200k.....E:
^MU	FORMAT CONVERT	NONE
	RTC DATE	Date Displayed
	RTC TIME	Time Displayed
	NONRESET CNTR0 (1, 2)	X,XXX IN
	RESET CNTR1	X,XXX IN
	RESET CNTR2	X,XXX IN

The printer has the ability to set a command or a group of commands once for all receipts (or labels) that follow. Those settings will remain in effect until they are changed by subsequent commands, the printer is reset, or you restore factory defaults.

Printer Memory Management and Related Status Reports

To help you manage printer resources, the printer supports a variety of format commands to manage memory, transfer objects (between memory areas, import and export), object naming, and provide various printer operating status reports. They are very similar to the old DOS commands like DIR (directory listing) and DEL (delete file). The most common reports are also part of the Zebra Setup Utility and ZebraDesigner ™ Windows driver.

It is recommended that a single command be processed within this type of format (form).A single command is easily reused as a maintenance and development tool.

^XA — Start Format Command

A Single Format Command is recommended for purposes of reuse

^XZ — End Format Command

Many of the commands that transfer objects, manage and report on memory are control (~) commands. They do not need the be within a format (form). They will be processed immediately upon receipt by the printer whether in a format (form) or not.

ZPL Programming for Memory Management

ZPL has various printer memory locations that are used to run the printer, assemble the print image, store formats (forms), graphics, fonts and configuration settings.

- ZPL treats Formats (Forms), Fonts, and Graphics like files; and memory locations like disk drives in the DOS operating system environment:
  - Memory Object Naming: Up to sixteen (16) alphanumeric characters followed by a three (3) alphanumeric character file extension, for example: **123456789ABCDEF.TTF**
    Legacy ZPL printers with V60.13 firmware and earlier can only use the 8.3 file name format verses today's 16.3 file name format.
- Allows moving objects between memory locations and deleting objects.
- Supports DOS directory style file list reports as printouts or status to the host.
- Allows use of 'wild cards' (*) in file access

Table 3 Object Management and Status Report Commands

Command	Name	Description
^WD	Print Directory Label	Prints a list of objects and resident barcodes and fonts in all addressable memory locations
~WC	Print Configuration Label	Prints a configuration Status Receipt (Label) Same as FEED Button mode one flash routine
^ID	Object Delete	Deletes objects from printer memory
^TO	Transfer Object	Used to copy an object or group of objects from one memory area to another.
^CM	Change Memory Letter Designation	Reassigns a letter designation to a printer memory area.
^JB	Initialize Flash memory	Similar to formatting a disk - erases all objects from the specified memory locations B: or E:.
~JB	Reset Optional Memory	Similar to formatting a disk - erases all objects from the B: memory (factory option).
~DY	Download Objects	Downloads and installs wide variety of printer usable programming objects: fonts (OpenType and TrueType), graphics, and other object data types. Recommendation: Use ZebraNet™ Bridge for downloading graphics and fonts in the printer.
~DG	Download Graphic	Downloads an ASCII Hex representation of a graphic image. This is used by ZebraDesigner ™ (label creation application) for graphics.
^FL	Font Linking	Appends secondary TrueType font or fonts to the primary TrueType font to add glyphs (characters).
^LF	List Font Links	Prints a list of the linked fonts
^CW	Font Identifier	Assigns a single alphanumeric character as an alias to a font stored in memory.

Important • Some factory installed ZPL fonts in your printer cannot be copied, cloned or restored to your printer by reloading or updating firmware. If these license restricted ZPL fonts are removed by an explicit ZPL object delete command, they must be repurchased and reinstalled via a font activation and installation utility. EPL fonts do not have this restriction.