INSTALLATION INSTRUCTIONS

TWO-STAGE HEAT PUMP OUTDOOR UNITS

R-410A earth friendly refrigerant

(-)PRL-JEZ 16 SEER EQUIPPED WITH THE *COMFORT CONTROL SYSTEM™*

RECOGNIZE THIS SYMBOL AS AN INDICATION OF IMPORTANT SAFETY INFORMATION!

⚠ WARNING

THESE INSTRUCTIONS ARE INTENDED AS AN AID TO QUALIFIED, LICENSED SERVICE PERSONNEL FOR PROPER INSTALLATION, ADJUSTMENT AND OPERATION OF THIS UNIT. READ THESE INSTRUCTIONS THOROUGHLY BEFORE ATTEMPTING INSTALLATION OR OPERATION. FAILURE TO FOLLOW THESE INSTRUCTIONS MAY RESULT IN IMPROPER INSTALLATION, ADJUSTMENT, SERVICE OR MAINTENANCE POSSIBLY RESULTING IN FIRE, ELECTRICAL SHOCK, PROPERTY DAMAGE, PERSONAL INJURY OR DEATH.

ENERGY STAR PARTNER

c UL us LISTED

ARI PERFORMANCE CERTIFIED ™
ARI Standard 210/240 Unitary Small HP

Accredited by the RvA

ABS Quality Evaluations, Inc. Management System Certification

ANAB ACCREDITED

ISO 9001:2000
Certificate Number: 30164

DO NOT DESTROY THIS MANUAL

PLEASE READ CAREFULLY AND KEEP IN A SAFE PLACE FOR FUTURE REFERENCE BY A SERVICEMAN

[ ] INDICATES METRIC CONVERSIONS

92-20522-51-05
SUPERSEDES 92-20522-51-04

TABLE OF CONTENTS

1.0 SAFETY INFORMATION . . . 3-4
2.0 GENERAL INFORMATION . . . 5
2.1 Checking Product Received . . . 5
2.2 Application . . . 5
2.3 Dimensions . . . 6
2.4 Electrical and Physical Data . . . 7
3.0 LOCATING UNIT . . . 7
3.1 Corrosive Environment . . . 7
3.2 Heat Pump Location . . . 7
3.3 Operational Issues . . . 8
3.4 For Units With Space Limitations . . . 8
3.5 Customer Satisfaction Issues . . . 8
3.6 Unit Mounting . . . 8
3.7 Factory-Preferred Tie-Down Method . . . 9
4.0 REFRIGERANT CONNECTIONS . . . 10
4.1 Tools Required for Installing & Servicing R-410A Models . . . 10
4.2 Specification of R-410A . . . 11
4.3 Quick Reference Guide for R-410A . . . 11
5.0 REPLACEMENT UNITS . . . 11
6.0 INDOOR COIL . . . 11
6.1 Location . . . 12
7.0 INTERCONNECTING TUBING . . . 12
7.1 Vapor & Liquid Lines . . . 12
7.2 Maximum Length of Lines . . . 13
7.3 Outdoor Unit Installed Above or Below Indoor Coil . . . 13
7.4 Tubing Installation . . . 13
7.5 Tubing Connections . . . 14
7.6 Leak Testing . . . 14
8.0 DEMAND DEFROST CONTROL . . . 15
8.1 Defrost Initiation . . . 15
8.2 Defrost Termination . . . 15
8.3 Temperature Sensors . . . 15
8.4 Test Mode . . . 15
8.5 Demand Defrost Operation . . . 15
8.6 Trouble Shooting Demand Defrost . . . 15
9.0 COMPRESSOR CRANKCASE HEAT (CCH) . . . 16
10.0 HARD START COMPONENTS . . . 16
11.0 HIGH & LOW PRESSURE CONTROLS (HPC AND LPC) . . . 16
11.1 Evacuation Procedure . . . 16
12.0 COMFORT CONTROL SYSTEM . . . 17
12.1 Control Description . . . 17
12.2 ICC Control Operation . . . 19
12.3 Active Compressor Protection Mode . . . 20
12.4 Test & Fault Recall Modes . . . 20
12.5 Status & Diagnostic Description . . . 21
12.6 L Terminal Output . . . 22
12.7 (-)PRL-JEZ Diagnostic Label . . . 23
12.8 (-)PRL-JEZ Test & Fault Recall Label . . . 24
13.0 ELECTRICAL WIRING . . . 25
13.1 Power Wiring . . . 25
13.2 Grounding . . . 25
13.3 Control Wiring . . . 25
13.4 Typical Thermostat Wiring Diagrams . . . 26
14.0 START UP & PERFORMANCE . . . 27
15.0 CHECKING AIRFLOW . . . 27
16.0 CHECKING REFRIGERANT CHARGE . . . 28
16.1 Charging Units with R-410A Refrigerant . . . 28
16.2 Charging By Liquid Pressure . . . 28
16.3 Charging By Weight . . . 28
16.4 Final Leak Testing . . . 29
17.0 TROUBLESHOOTING . . . 29
17.1 Electrical Checks Flow Chart . . . 29
17.2 Cooling Mechanical Checks Flow Chart . . . 30
17.3 Defrost Mechanical Checks Flow Chart . . . 31
17.4 General Troubleshooting Chart . . . 32
17.5 Service Analyzer Charts . . . 33-37
17.6 Subcooling Calculation . . . 38
18.0 WIRING DIAGRAMS . . . 39-40

1.0 SAFETY INFORMATION

⚠ WARNING

THESE INSTRUCTIONS ARE INTENDED AS AN AID TO QUALIFIED, LICENSED SERVICE PERSONNEL FOR PROPER INSTALLATION, ADJUSTMENT AND OPERATION OF THIS UNIT. READ THESE INSTRUCTIONS THOROUGHLY BEFORE ATTEMPTING INSTALLATION OR OPERATION. FAILURE TO FOLLOW THESE INSTRUCTIONS MAY RESULT IN IMPROPER INSTALLATION, ADJUSTMENT, SERVICE OR MAINTENANCE POSSIBLY RESULTING IN FIRE, ELECTRICAL SHOCK, PROPERTY DAMAGE, PERSONAL INJURY OR DEATH.

⚠ WARNING

THE MANUFACTURER'S WARRANTY DOES NOT COVER ANY DAMAGE OR DEFECT TO THE AIR CONDITIONER CAUSED BY THE ATTACHMENT OR USE OF ANY COMPONENTS, ACCESSORIES OR DEVICES (OTHER THAN THOSE AUTHORIZED BY THE MANUFACTURER) INTO, ONTO OR IN CONJUNCTION WITH THE AIR CONDITIONER. YOU SHOULD BE AWARE THAT THE USE OF UNAUTHORIZED COMPONENTS, ACCESSORIES OR DEVICES MAY ADVERSELY AFFECT THE OPERATION OF THE AIR CONDITIONER AND MAY ALSO ENDANGER LIFE AND PROPERTY. THE MANUFACTURER DISCLAIMS ANY RESPONSIBILITY FOR SUCH LOSS OR INJURY RESULTING FROM THE USE OF SUCH UNAUTHORIZED COMPONENTS, ACCESSORIES OR DEVICES.

⚠ WARNING

DISCONNECT ALL POWER TO UNIT BEFORE STARTING MAINTENANCE. FAILURE TO DO SO CAN CAUSE ELECTRICAL SHOCK RESULTING IN SEVERE PERSONAL INJURY OR DEATH.

⚠ WARNING

DO NOT USE OXYGEN TO PURGE LINES OR PRESSURIZE SYSTEM FOR LEAK TEST. OXYGEN REACTS VIOLENTLY WITH OIL, WHICH CAN CAUSE AN EXPLOSION RESULTING IN SEVERE PERSONAL INJURY OR DEATH.

⚠ WARNING

THE UNIT MUST BE PERMANENTLY GROUNDED. FAILURE TO DO SO CAN CAUSE ELECTRICAL SHOCK RESULTING IN SEVERE PERSONAL INJURY OR DEATH.

⚠ WARNING

TURN OFF ELECTRIC POWER AT THE FUSE BOX OR SERVICE PANEL BEFORE MAKING ANY ELECTRICAL CONNECTIONS.

ALSO, THE GROUND CONNECTION MUST BE COMPLETED BEFORE MAKING LINE VOLTAGE CONNECTIONS. FAILURE TO DO SO CAN RESULT IN ELECTRICAL SHOCK, SEVERE PERSONAL INJURY OR DEATH.

CAUTION

DUAL FUEL (FOSSIL FUEL) APPLICATIONS REQUIRE THE USE OF A HIGH PRESSURE CONTROL IN THE HEAT PUMP SECTION. IF A HIGH PRESSURE CONTROL WAS NOT ORIGINALLY PROVIDED WITH THE HEAT PUMP SECTION FROM THE FACTORY, A FACTORY APPROVED HIGH PRESSURE CONTROL KIT MUST BE PURCHASED FROM THE MANUFACTURER AND INSTALLED IN THE HEAT PUMP. DUAL FUEL (FOSSIL FUEL) APPLICATIONS IN WHICH A HIGH PRESSURE CONTROL IS NOT INSTALLED IN THE OUTDOOR HEAT PUMP SECTION WILL VOID THE SAFETY APPROVAL OF THE PRODUCT.

⚠ CAUTION

R-410A systems operate at higher pressures than R-22 systems. Do not use R-22 service equipment or components on R-410A equipment.

⚠ CAUTION

Only use evaporators approved for use on R-410A systems. Use of existing R-22 evaporators can introduce mineral oil to the R-410A refrigerant forming two different liquids and decreasing oil return to the compressor. This can result in compressor failure.

⚠ CAUTION

When coil is installed over a finished ceiling and/or living area, it is recommended that a secondary sheet metal condensate pan be constructed and installed under entire unit. Failure to do so can result in property damage.

⚠ CAUTION

THE COMPRESSOR HAS AN INTERNAL OVERLOAD PROTECTOR. UNDER SOME CONDITIONS, IT CAN TAKE UP TO 2 HOURS FOR THIS OVERLOAD TO RESET. MAKE SURE OVERLOAD HAS HAD TIME TO RESET BEFORE CONDEMNING THE COMPRESSOR.

⚠ CAUTION

UNIT MAY START SUDDENLY AND WITHOUT WARNING
Solid red light indicates a thermostat call for unit operation is present at the ICC control. ICC control will attempt to start unit after short cycle timer expires or when in Active Protection mode will attempt to restart unit prior to Lockout mode.

⚠ CAUTION

UNIT MAY START SUDDENLY AND WITHOUT WARNING
Solid red light indicates a thermostat call for unit operation is present at the ICC. ICC will attempt to start unit after short cycle timer expires or when in Active Protection mode will attempt to restart unit prior to Lockout mode.

⚠ CAUTION

THE TOP OF THE SCROLL COMPRESSOR SHELL IS HOT. TOUCHING THE COMPRESSOR TOP MAY RESULT IN SERIOUS PERSONAL INJURY.

⚠ CAUTION

R-410A PRESSURES ARE APPROXIMATELY 60% HIGHER THAN R-22 PRESSURES. USE APPROPRIATE CARE WHEN USING THIS REFRIGERANT. FAILURE TO EXERCISE CARE MAY RESULT IN EQUIPMENT DAMAGE, OR PERSONAL INJURY.

⚠ WARNING

THE MANUFACTURER'S WARRANTY DOES NOT COVER ANY DAMAGE OR DEFECT TO THE AIR CONDITIONER CAUSED BY THE ATTACHMENT OR USE OF ANY COMPONENTS. ACCESSORIES OR DEVICES (OTHER THAN THOSE AUTHORIZED BY THE MANUFACTURER) INTO, ONTO OR IN CONJUNCTION WITH THE AIR CONDITIONER. YOU SHOULD BE AWARE THAT THE USE OF UNAUTHORIZED COMPONENTS, ACCESSORIES OR DEVICES MAY ADVERSELY AFFECT THE OPERATION OF THE AIR CONDITIONER AND MAY ALSO ENDANGER LIFE AND PROPERTY. THE MANUFACTURER DISCLAIMS ANY RESPONSIBILITY FOR SUCH LOSS OR INJURY RESULTING FROM THE USE OF SUCH UNAUTHORIZED COMPONENTS, ACCESSORIES OR DEVICES.

MATCH ALL COMPONENTS:

- **OUTDOOR UNIT**
- **INDOOR COIL/METERING DEVICE**
- **INDOOR AIR HANDLER/FURNACE**
- **REFRIGERANT LINES**

2.0 GENERAL INFORMATION

The information contained in this manual has been prepared to assist in the proper installation, operation and maintenance of the air conditioning system. Improper installation, or installation not made in accordance with these instructions, can result in unsatisfactory operation and/or dangerous conditions, and can cause the related warranty not to apply.

Read this manual and any instructions packaged with separate equipment required to make up the system prior to installation. Retain this manual for future reference.

To achieve optimum efficiency and capacity, the indoor cooling coils listed in the condensing unit specification sheet should be used.

2.1 Checking Product Received

Upon receiving unit, inspect it for any shipping damage. Claims for damage, either apparent or concealed, should be filed immediately with the shipping company. Check heat pump model number, electrical characteristics and accessories to determine if they are correct. Check system components (evaporator coil, condensing unit, evaporator blower, etc.) to make sure they are properly matched.

2.2 Application

Before specifying any heat pump equipment, a survey of the structure and a heat loss and heat gain calculation must be made. A heat loss calculation involves identifying all surfaces and openings that lose heat to the surrounding air and quantifying that heat loss. A cooling heat gain calculation makes similar measurements and determines the amount of heat needed to be removed. A heat gain calculation also calculates the extra heat load caused by sunlight and by humidity removal. These factors must be considered before selecting a heat pump system to provide year round comfort. The Air Conditioning Contractors of America (ACCA) J Manual method of load calculation is one recognized procedure for determining the heating and cooling load.

The cooling load calculation determines the heat pump size. There are two capacities that enable the equipment to provide comfort. The first is sensible capacity. Sensible heat is the heat energy measured on the dry bulb thermometer.

The second form of heat is called latent or hidden heat. This is heat held in the humidity in the air. Removing this heat does not affect a thermometer. However, removing the heat held in the moisture in the air greatly increases comfort. A properly sized unit removes both forms of heat, producing a comfortable living space. An oversized system cycles on and off too quickly and does not properly remove humidity, producing an uncomfortable living space. Select the indoor and outdoor equipment combination based on the manufacturerís engineering data.

After the proper equipment combination has been selected, satisfying both sensible and latent requirements, the system must be properly installed. Only then can the unit provide the comfort the manufacturer built into it.

There are several factors that installers must consider.

- Outdoor unit location
- Proper equipment evacuation
- Refrigerant charge
- Indoor unit air flow
- Indoor unit blower speed
- Supply and return air duct design and sizing
- System air balancing
- Diffuser and return air grille location and sizing

2.3 DIMENSIONS

FIGURE 1
DIMENSIONS AND INSTALLATION CLEARANCES

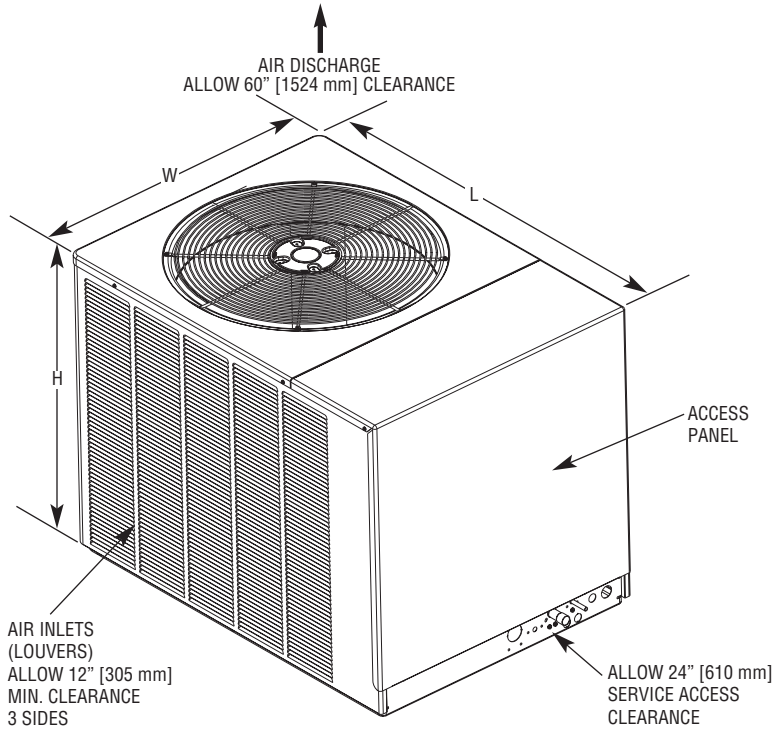

UNIT MODEL NUMBER EXPLANATION

(–) P R L – 036 J E Z

- Z: COOLING CONNECTION FITTING
  Z - SWEAT W/ SCROLL COMPRESSOR
- E: VARIATION
  E = EQUIPPED WITH THE *COMFORT CONTROL SYSTEM™*
- J: ELECTRICAL DESIGNATION
  J - 208/230-1-60
- 036: COOLING CAPACITY
  BTUH x 1000 (NOMINAL CAPACITY)
  024 = 24,000 BTU/HR
  036 = 36,000 BTU/HR
  048 = 48,000 BTU/HR
  060 = 60,000 BTU/HR
- L: DESIGN SERIES
  R-410A
- R: 16 SEER
- P: REMOTE HEAT PUMP
- (–): TRADE NAME

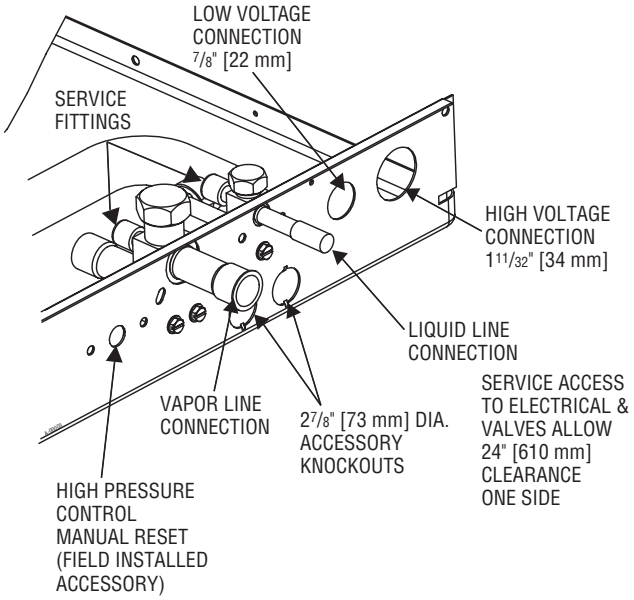

BASE PAN

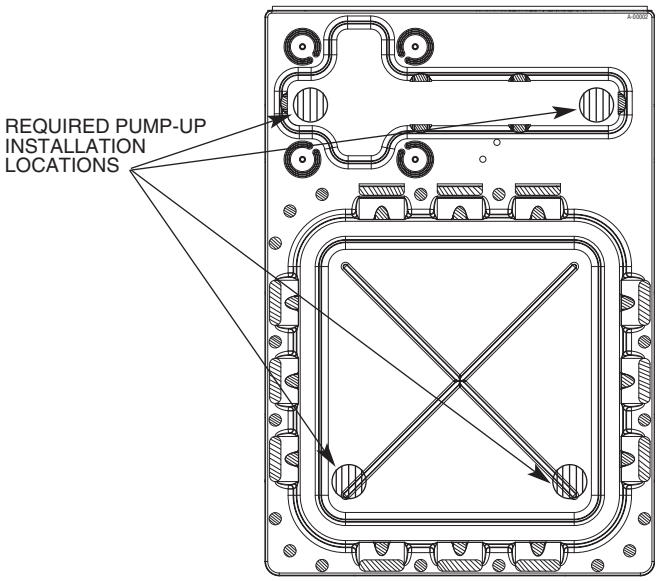

BOTTOM VIEW SHOWING DEFROST CONDENSATE DRAIN OPENINGS (\\\\\\ SHADED AREAS).

DIMENSIONAL DATA

HEAT PUMP MODEL (-)PRL	024, 036, 048, 060
HEIGHT "H" (INCHES)	33
LENGTH "L" (INCHES)	44-3/4
WIDTH"W" (INCHES)	31-1/2

2.4 Electrical And Physical Data

TABLE 1
(-)PRL ELECTRICAL AND PHYSICAL DATA

Model Number (-)PRL-	ELECTRICAL								PHYSICAL						
	Phase Frequency (Hz) Voltage (Volts)	Voltage Operating Range (Volts)	Compressor		Fan Motor Full Load Amperes (FLA)	Minimum Circuit Ampacity Amperes	Fuse or HACR Circuit Breaker		Outdoor Coil				R-410A Oz. [g]	Weight	
			Rated Load Amperes (RLA)	Locked Rotor Amperes (LRA)			Minimum Amperes	Maximum Amperes	Face Area Sq. Ft. [M²]	No. Rows	Fins Per Inch	CFM [L/s]		Net Lbs. [kg]	Shipping Lbs. [kg]
024JEZ	1-60-208/230	197 - 253	10.3 / 10.3	52	0.5	14 / 14	20 / 20	20 / 20	15.8 [1.47]	1	22	HS*2800 [1322] LS*2300 [1086]	152.4 [4320]	257 [116.6]	275 [124.7]
036JEZ	1-60-208/230	197 - 253	16.7 / 16.7	82	1.0	22 / 22	30 / 30	35 / 35	23.0 [2.14]	2	22	HS*3700 [1747] LS*2800 [1322]	244.6 [6934]	293 [132.9]	311 [141.1]
048JEZ	1-60-208/230	197 - 253	21.2 / 21.2	96	1.0	28 / 28	35 / 35	45 / 45	23.0 [2.14]	2	22	HS*3500 [1652] LS*2800 [1322]	256.3 [7265]	300 [136.1]	318 [144.2]
060JEZ	1-60-208/230	197 - 253	25.6 / 25.6	118	1.1	34 / 34	40 / 40	50 / 50	23.0 [2.14]	2	22	3800 [1794]	284.4 [8063]	316 [143.3]	335 [152.0]

*HS = high speed
*LS = low speed

3.0 LOCATING UNIT

3.1 Corrosive Environment

The metal parts of this unit may be subject to rust or deterioration if exposed to a corrosive environment. This oxidation could shorten the equipment's useful life. Corrosive elements include, but are not limited to, salt spray, fog or mist in seacoast areas, sulphur or chlorine from lawn watering systems, and various chemical contaminants from industries such as paper mills and petroleum refineries.

If the unit is to be installed in an area where contaminants are likely to be a problem, special attention should be given to the equipment location and exposure.

- Avoid having lawn sprinkler heads spray directly on the unit cabinet.
- In coastal areas, locate the unit on the side of the building away from the waterfront.
- Shielding provided by a fence or shrubs may give some protection, but cannot violate minimum airflow and service access clearances.
- Elevating the unit off its slab or base enough to allow air circulation will help avoid holding water against the basepan.

Regular maintenance will reduce the build-up of contaminants and help to protect the unit's finish.

⚠ WARNING

DISCONNECT ALL POWER TO UNIT BEFORE STARTING MAINTENANCE. FAILURE TO DO SO CAN CAUSE ELECTRICAL SHOCK RESULTING IN SEVERE PERSONAL INJURY OR DEATH.

- Frequent washing of the cabinet, fan blade and coil with fresh water will remove most of the salt or other contaminants that build up on the unit.
- Regular cleaning and waxing of the cabinet with a good automobile polish will provide some protection.
- A good liquid cleaner may be used several times a year to remove matter that will not wash off with water.

Several different types of protective coatings are offered in some areas. These coatings may provide some benefit, but the effectiveness of such coating materials cannot be verified by the equipment manufacturer.

3.2 Heat Pump Location

Consult local and national building codes and ordinances for special installation requirements. Following location information will provide longer life and simplified servicing of the outdoor heat pump.

NOTE: These units must be installed outdoors. No ductwork can be attached, or other modifications made, to the discharge grille. Modifications will affect performance or operation.

3.3 Operational Issues

- **IMPORTANT:** Locate the unit in a manner that will not prevent, impair or compromise the performance of other equipment horizontally installed in proximity to the unit. Maintain all required minimum distances to gas and electric meters, dryer vents, exhaust and inlet openings. In the absence of National Codes, or manaufacturers' recommendations, local code recommendations and requirements will take presidence.
- Refrigerant piping and wiring should be properly sized and kept as short as possible to avoid capacity losses and increased operating costs.
- Locate the unit where water run off will not create a problem with the equipment. Position the unit away from the drip edge of the roof whenever possible. Units are weatherized, but can be affected by the following:
  - o Water pouring into the unit from the junction of rooflines, without protective guttering. Large volumes of water entering the heat pump while in operation can impact fan blade or motor life, and coil damage may occur to a heat pump if moisture cannot drain from the unit under freezing conditions.
  - o Freezing moisture, or sleeting conditions, can cause the cabinet to ice-over prematurely and prevent heat pump operation, requiring backup heat, which generally results in less economical operation.
- Closely follow clearance recommendations on Page 3.
  - o 24" to the service panel access
  - o 60" above heat pump fan discharge (unit top) to prevent recirculation
  - o 12" to heat pump coil grille air inlets

3.4 For Units With Space Limitations

FOR CONDENSERS WITH SPACE LIMITATIONS

In the event that a space limitation exists, we will permit the following clearances:

Single Unit Applications: Clearances below 6 inches will reduce unit capacity and efficiency. Do not reduce the 60-inch discharge, or the 24-inch service clearances.

Multiple Unit Applications: When multiple condenser grille sides are aligned, a 6-inch per unit clearance is recommended, for a total of 12" between two units. Two combined clearances below 12 inches will reduce capacity and efficiency. Do not reduce the 60-inch discharge, or 24-inch service, clearances.

3.5 Customer Satisfaction Issues

- The heat pump should be located away from the living, sleeping and recreational spaces of the owner and those spaces on adjoining property.
- To prevent noise transmission, the mounting pad for the outdoor unit should not be connected to the structure, and should be located sufficient distance above grade to prevent ground water from entering the unit.

3.6 Unit Mounting

If elevating the heat pump, either on a flat roof or on a slab, observe the following guidelines.

- The base pan provided elevates the heat pump 3/4" above the base pad.
- If elevating a unit on a flat roof, use 4" x 4" (or equivalent) stringers positioned to distribute unit weight evenly and prevent noise and vibration (see Figure 2).

  NOTE: Do not block drain openings shown in Figure 1.
- If unit must be elevated because of anticipated snow fall, secure unit and elevating stand such that unit and/or stand will not tip over or fall off. Keep in mind that someone may try to climb on unit.

FIGURE 2
RECOMMENDED ELEVATED INSTALLATION

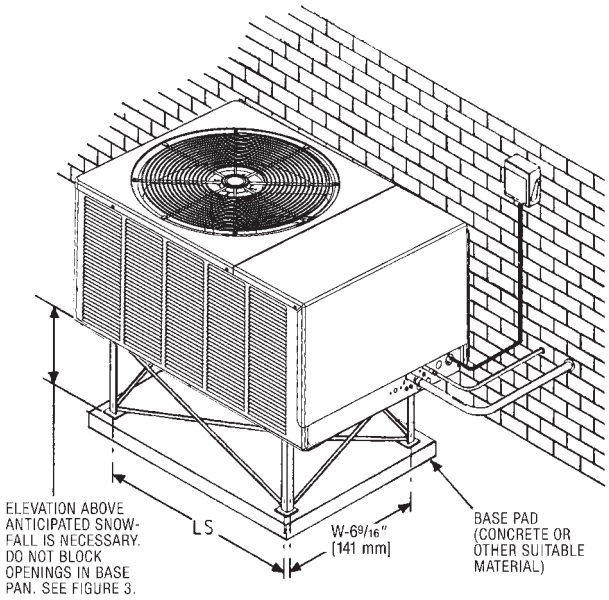

3.7 Factory-Preferred Tie-Down Method INSTRUCTIONS

IMPORTANT: These instructions are intended as a guide to securing equipment for wind-load ratings of “120 MPH sustained wind load” and “3-second, 150 MPH gust.” While this procedure is not mandatory, the Manufacturer does recommend that equipment be properly secured in areas where high wind damage may occur.

STEP 1: Before installing, clear pad of any dirt or debris.
IMPORTANT: The pad must be constructed of industry-approved materials, and must be thick enough to accommodate the concrete fastener.

STEP 2: Center base pan on pad, ensuring it is level.

STEP 3: Using basepad as a guide, mark spots on concrete where 4 holes will be drilled (see Figure 3).

STEP 4: Drill four pilot holes in pad, ensuring that the hole is at least 1/4” deeper than the concrete screw being used.

STEP 5: Center basepan over pre-drilled holes and insert concrete screws.

STEP 6: Tighten concrete screws.
NOTE: Do not over-tighten the concrete screws. Doing so can weaken the integrity of the concrete screw and cause it to break.

STEP 7: Finish unit assembly per unit’s installation instructions.

FIGURE 3
SCREW LOCATIONS

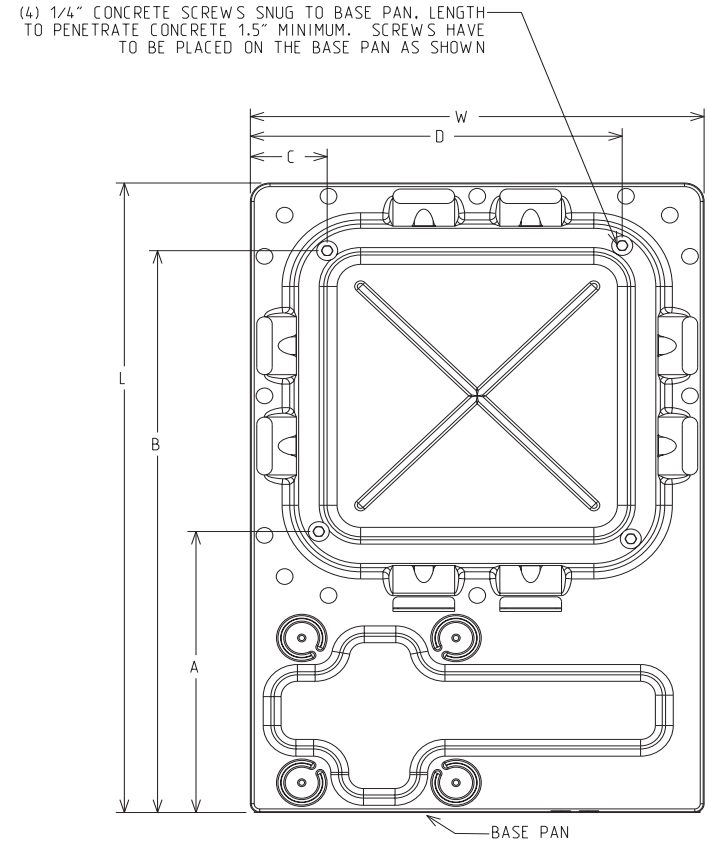

TABLE 2
DIMENSIONS

MODEL NUMBER	L	W	A	B	C	D
(-)PRL-024/036/048/060	41.5	29.813	15	38	3.5	26.5

4.0 REFRIGERANT CONNECTIONS

All units are factory charged with Refrigerant 410A. All models are supplied with service valves. Keep tube ends sealed until connection is to be made to prevent system contamination.

4.1 Tools Required For Installing & Servicing R-410A Models

Manifold Sets:
- **-Up to 800 PSIG High side**
- **-Up to 250 PSIG Low Side**
- **-550 PSIG Low Side Retard**

Manifold Hoses:
- **-Service Pressure Rating of 800 PSIG**

Recovery Cylinders:
- **-400 PSIG Pressure Rating**
- **-Dept. of Transportation 4BA400 or BW400**

⚠ CAUTION

R-410A systems operate at higher pressures than R-22 systems. Do not use R-22 service equipment or components on R-410A equipment.

4.2 Specifications of R-410A:

Application: **R-410A is not a drop-in replacement for R-22;** equipment designs must accommodate its higher pressures. It cannot be retrofitted into R-22 heat pumps.

Physical Properties: R-410A has an atmospheric boiling point of -62.9°F and its saturation pressure at 77°F is 224.5 psig.

Composition: R-410A is an azeotropic mixture of 50% by weight difluoromethane (HFC-32) and 50% by weight pentafluoroethane (HFC-125).

Pressure: The pressure of R-410A is approximately 60% (1.6 times) greater than R-22. Recovery and recycle equipment, pumps, hoses and the like need to have design pressure ratings appropriate for R-410A. *Manifold sets need to range up to 800 psig high-side and 250 psig low-side with a 550 psig low-side retard. Hoses need to have a service pressure rating of 800 psig. Recovery cylinders need to have a 400 psig service pressure rating.* DOT 4BA400 or DOT BW400.

Combustibility: At pressures above 1 atmosphere, mixture of R-410A and air can become combustible. **R-410A and air should never be mixed in tanks or supply lines, or be allowed to accumulate in storage tanks. Leak checking should never be done with a mixture of R-410A and air.** Leak checking can be performed safely with nitrogen or a mixture of R-410A and nitrogen.

4.3 Quick Reference Guide For R-410A

- R-410A refrigerant operates at approximately 60% higher pressure (1.6 times) than R-22. Ensure that servicing equipment is designed to operate with R-410A.
- R-410A refrigerant cylinders are pink in color.
- R-410A, as with other HFC's is only compatible with POE oils.
- Vacuum pumps will not remove moisture from oil.
- R-410A systems are to be charged with liquid refrigerants. Prior to March 1999, R-410A refrigerant cylinders had a dip tube. These cylinders should be kept upright for equipment charging. Post March 1999 cylinders do not have a dip tube and should be inverted to ensure liquid charging of the equipment.
- Do not install a suction line filter drier in the liquid line.
- A liquid line filter drier is standard on every unit. Only manufacturer approved liquid line filter driers can be used. These are Sporlan (CW083S) and Alco (80K083S) driers. These filter driers are rated for minimum working pressure of 600 psig.
- Desiccant (drying agent) must be compatible for POE oils and R-410A.

5.0 REPLACEMENT UNITS

To prevent failure of a new condensing unit, the existing evaporator tubing system must be correctly sized and cleaned or replaced. Care must be exercised that the expansion device is not plugged. For new and replacement units, a liquid line filter drier should be installed and refrigerant tubing should be properly sized. Test the oil for acid. If positive, a suction line filter drier is mandatory.

IMPORTANT: WHEN REPLACING AN R-22 UNIT WITH AN R-410A UNIT, EITHER REPLACE THE LINE SET OR ENSURE THAT THE EXISTING LINE SET IS THOROUGHLY CLEANED OF ANY OLD OIL OR DEBRIS.

6.0 INDOOR COIL

REFER TO INDOOR COIL MANUFACTURER'S INSTALLATION INSTRUCTIONS.

IMPORTANT: The manufacturer is not responsible for the performance and operation of a mismatched system, or for a match listed with another manufacturer's coil.

⚠ CAUTION

Only use evaporators approved for use on R-410A systems. Use of existing R-22 evaporators can introduce mineral oil to the R-410A refrigerant forming two different liquids and decreasing oil return to the compressor. This can result in compressor failure.

NOTE: All (-)PRL units must be installed with a TXV Evaporator.

The thermostatic expansion valve is specifically designed to operate with R-410A. **DO NOT use an R-22 TXV or evaporator. The existing evaporator must be replaced with the factory specified TXV evaporator specifically designed for R-410A.**

6.1 Location

Do not install the indoor coil in the return duct system of a gas or oil furnace. Provide a service inlet to the coil for inspection and cleaning. Keep the coil pitched toward the drain connection.

⚠ CAUTION

When coil is installed over a finished ceiling and/or living area, it is recommended that a secondary sheet metal condensate pan be constructed and installed under entire unit. Failure to do so can result in property damage.

7.0 INTERCONNECTING TUBING

7.1 Vapor and Liquid Lines

Keep all lines sealed until connection is made.

Make connections at the indoor coil first.

Refer to Line Size Information in Tables 3 and 4 for correct size and multipliers to be used to determine capacity for various vapor line diameters and lengths of run. The losses due to the lines being exposed to outdoor conditions are not included.

The factory refrigeration charge in the outdoor unit is sufficient for 15 feet of interconnecting lines. The factory refrigeration charge in the outdoor unit is sufficient for the unit and 15 feet of standard size interconnecting liquid and vapor lines. For different lengths, adjust the charge as indicated below.

1/4” ± .3 oz. per foot

5/16” ± .4 oz. per foot

3/8” ± .6 oz. per foot

1/2” ± 1.2 oz. per foot

TABLE 3
VAPOR LINE LENGTH SIZE AND CAPACITY MULTIPLIER

Suction Line Length/Size vs. Capacity Multiplier (2-Stage R-410A)					
Unit Size		2 Ton	3 Ton	4 Ton	5 Ton
Suction Line Connection Size		3/4" I.D.	3/4" I.D.	7/8" I.D.	7/8" I.D.
Suction Line Run		---	5/8	3/4	3/4
		5/8*	3/4*	7/8*	7/8*
		3/4	---	---	---
25'	Optional	---	0.99	1.00	0.99
	Standard	1.00	1.00	1.00	1.00
....	Optional	1.00	---	---	---
50'	Optional	---	0.98	0.98	0.98
	Standard	0.99	0.99	0.99	0.99
....	Optional	1.00	---	---	---
100'	Optional	---	0.95	0.95	0.94
	Standard	0.97	0.97	0.97	0.97
....	Optional	0.98	---	---	---
150'	Optional	---	0.91	0.93	0.91
	Standard	0.95	0.95	0.95	0.95
....	Optional	0.97	---	---	---

Notes:
Using suction line larger than shown in chart will result in poor oil return and is not recommended.

***Standard Line Size**

7.2 Maximum Length of Lines

The maximum length of interconnecting line is 150 feet. Always use the shortest length possible with a minimum number of bends. Additional compressor oil is not required for any length up to 150 feet.

NOTE: Excessively long refrigerant lines cause loss of equipment capacity.

7.3 Outdoor Unit Installed Above or Below Indoor Coil

Use the following guidelines when installing the unit:

1. Expansion Valve Coil:
   a. The vertical separation cannot exceed the value in Table 4.
   b. No changes are required for expansion valve coils.
2. It is recommended to use the smallest liquid line size permitted to minimize the system charge.
3. Table 4 may be used for sizing horizontal runs.

TABLE 4
LIQUID LINE SIZE — OUTDOOR UNIT ABOVE OR BELOW INDOOR COIL

Liquid Line Sizing (2-Stage R-410A)								
2-Stage R-410A System Capacity Model	Line Size Connection Size (Inch I.D.)	Line Size (Inch OD)	Liquid Line Size Outdoor unit Above or Below Indoor Coil **(Heat Pump Only)**					
			Total **Equivalent** Length - Feet					
			25	50	75	100	125	150
			Maximum Vertical Separation - Feet					
2 Ton	5/16"	1/4*	25	10	N/A	N/A	N/A	N/A
		5/16	25	50	40	35	29	22
		3/8	25	50	45	42	39	37
3 Ton	5/16"	5/16*	25	39	28	16	5	N/A
		3/8	25	50	51	48	44	40
4 Ton	3/8"	5/16*	25	15	N/A	N/A	N/A	N/A
		3/8	25	47	40	32	24	17
5 Ton	3/8"	3/8*	25	41	30	20	10	0
		1/2	25	50	56	54	52	50

Notes:
***Standard Line Size**
N/A - Application not recommended.

7.4 Tubing Installation

Observe the following when installing correctly sized type “L” refrigerant tubing between the condensing unit and evaporator coil:

- If a portion of the liquid line passes through a hot area where liquid refrigerant can be heated to form vapor, insulating the liquid line is required.
- Use clean, dehydrated, sealed refrigeration grade tubing.
- Always keep tubing sealed until tubing is in place and connections are to be made.
- Blow out the liquid and vapor lines with dry nitrogen before connecting to the outdoor unit and indoor coil. Any debris in the line set will end up plugging the expansion device.
- As an added precaution, a high quality filter drier is standard on R-410A units.
- Do not allow the vapor line and liquid line to be in contact with each other. This causes an undesirable heat transfer resulting in capacity loss and increased power consumption. The vapor line must be insulated.
- If tubing has been cut, make sure ends are deburred while holding in a position to prevent chips from falling into tubing. Burrs such as those caused by tubing cutters can affect performance dramatically, particularly on small liquid line sizes.
- For best operation, keep tubing run as short as possible with a minimum number of elbows or bends.

- Locations where the tubing will be exposed to mechanical damage should be avoided. If it is necessary to use such locations, the copper tubing should be housed to prevent damage.
- If tubing is to be run underground, it must be run in a sealed watertight chase.
- Use care in routing tubing and do not kink or twist. Use a good tubing bender on the vapor line to prevent kinking.
- Route the tubing using temporary hangers, then straighten the tubing and install permanent hangers. Line must be adequately supported.
- The vapor line must be insulated to prevent dripping (sweating) and prevent performance losses. Armaflex and Rubatex are satisfactory insulations for this purpose. Use 1/2” minimum insulation thickness, additional insulation may be required for long runs.
- Check Table 3 for the correct vapor line size. Check Table 4 for the correct liquid line size.

7.5 Tubing Connections

Indoor coils have only a holding charge of dry nitrogen. Keep all tube ends sealed until connections are to be made.

- Use type “L” copper refrigeration tubing. Braze the connections with the following alloys:
  - copper to copper - 5%
  - Silver alloy (no flux)
  - copper to steel or brass - 35%
  - silver alloy (with flux)
- Be certain both refrigerant shutoff valves at the outdoor unit are closed.
- Clean the inside of the fittings and outside of the tubing with steel wool or sand cloth before soldering. Always keep chips, steel wool, dirt, etc., out of the inside when cleaning.
- Assemble tubing part way into fitting. Apply flux all around the outside of the tubing and push tubing into stop. This procedure will keep the flux from getting inside the system.
- Remove the cap and schrader core from service port to protect seals from heat damage.
- Use an appropriate heatsink material around the copper stub and the service valves before applying heat.
- **IMPORTANT:** Do not braze any fitting with the TEV sensing bulb attached.
- Braze the tubing between the outdoor unit and indoor coil. Flow dry nitrogen into a service port and through the tubing while brazing.
- After brazing – use an appropriate heatsink material to cool the joint and remove any flux residue.
- The service valves are not backseating valves. To open the valves, remove the valve cap with an adjustable wrench. Insert a 3/16” or 5/16” hex wrench into the stem. Back out counterclockwise.
- Replace the valve cap finger tight then tighten an additional 1/2 hex flat for a metal-to-metal seal.

7.6 Leak Testing

- Pressurize line set and coil through service fittings with dry nitrogen to 150 PSIG maximum. Leak test all joints using liquid detergent. If a leak is found, recover pressure and repair.

⚠ WARNING

DO NOT USE OXYGEN TO PURGE LINES OR PRESSURIZE SYSTEM FOR LEAK TEST. OXYGEN REACTS VIOLENTLY WITH OIL, WHICH CAN CAUSE AN EXPLOSION RESULTING IN SEVERE PERSONAL INJURY OR DEATH.

8.0 DEMAND DEFROST CONTROL

The demand defrost control is a printed circuit board assembly consisting of solid state control devices with electro-mechanical outputs. The demand defrost control monitors the outdoor ambient temperature, outdoor coil temperature, and the compressor run-time to determine when a defrost cycle is required.

8.1 Defrost Initiation

A defrost will be initiated when the three conditions below are satisfied:

1) The outdoor coil temperature is below 35°F.
2) The compressor has operated for at least 34 minutes with the outdoor coil temperature below 35°F.
3) The measured difference between the ambient temperature and the outdoor coil temperature is greater than the calculated delta T.

Additionally, a defrost will be initiated if six hours of accumulated compressor run-time has elapsed without a defrost with the outdoor coil temperature below 35°F.

NOTE: Compressor will shut off for 5 seconds at the beginning and end of the defrost cycle to minimize noise.

8.2 Defrost Termination

Once a defrost is initiated, the defrost will continue until fourteen minutes has elapsed or the coil temperature has reached the terminate temperature. The terminate temperature is factory set at 70°F, although the temperature can be changed to 50°F, 60°F, 70°F or 80°F by relocating a jumper on the board.

NOTE: Compressor will shut off for 5 seconds at the beginning and end of the defrost cycle to minimize noise.

8.3 Temperature Sensors

The coil sensor is clipped to the top tube on the outdoor coil at the point feed by the distribution tubes from the expansion devise (short 3/8” dia. tube). The air sensor is located on the defrost control board.

If the ambient sensor fails the defrost control will initiate a defrost every 34 minutes with the coil temperature below 35°F.

If the coil sensor fails the defrost control will not initiate a defrost.

8.4 Test Mode

The test mode is initiated by shorting the TEST pins. In this mode of operation, the enable temperature is ignored and all timers are sped up by a factor of 240. To initiate a manual defrost, short the TEST pins. Remove the short when the system switches to defrost mode. The defrost will terminate on time (14 minutes) or when the termination temperature has been achieved. Short TEST pins again to terminate the defrost immediately.

8.5 Demand Defrost Operation

It is important that such systems be off for a minimum of 5 minutes before restarting to allow equalization of pressures. The thermostat should not be moved to cycle unit without waiting five minutes. To do so may cause the compressor to stop on an automatic opening overload device or blow a fuse. Poor electrical service can cause nuisance tripping on overloads or blow fuses. For PSC type operation, the refrigerant metering must be done with cap tubes, flow check, or bleed type expansion valve because of low starting torque.

8.6 Trouble Shooting Demand Defrost

Set the indoor thermostat select switch to heat and thermostat lever to a call for heat.

Jumper the “test pins” to put the unit into defrost. If the unit goes into defrost and comes back out of defrost, the indication is that the control is working properly.

If the unit did not go into defrost using the test pins, check to ensure that 24V is being supplied to the control board. If 24V is present then replace the control.

9.0 COMPRESSOR CRANKCASE HEAT (CCH)

Due to large refrigerant level, CCH is standard on these models due to refrigerant migration during the off cycle that can result in a noisy start up.

Crankcase Heater Operation:

Supplemental crankcase heat is required to prevent refrigerant migration in systems with relatively high system refrigerant charges.

The crankcase heater control is designed for maximum energy savings and uses a 120-minute off delay.

Summary of operation:

- The crankcase heater is off whenever the compressor is running.
- Once the compressor turns off, the crankcase heater control (CCH) begins the two-hour timer countdown.
- If the compressor stays off for two hours, the CCH turns on the crankcase heater.

All heaters are located on the lower half of the compressor shell. Its purpose is to drive refrigerant from the compressor shell during long off cycles, thus preventing damage to the compressor during start-up.

At initial start-up or after extended shutdown periods, make sure the heater is energized for at least 12 hours before the compressor is started. (Disconnect switch on and wall thermostat off.)

10.0 HARD START COMPONENTS

Factory-installed start components are standard on all models.

11.0 HIGH AND LOW PRESSURE CONTROLS (HPC AND LPC)

These controls keep the compressor from operating in pressure ranges which can cause damage to the compressor. Both controls are in the low voltage control circuit.

High pressure control (HPC) is an automatic-reset which opens near 610 PSIG and closes near 420 PSIG.

The low pressure control (LPC) is an automatic-reset which opens near 20 PSIG and closes near 40 PSIG.

NOTE: HPC and LPC are monitored by the *Comfort Control System™*. See Section 12.0.

⚠ CAUTION

THE COMPRESSOR HAS AN INTERNAL OVERLOAD PROTECTOR. UNDER SOME CONDITIONS, IT CAN TAKE UP TO 2 HOURS FOR THIS OVERLOAD TO RESET. MAKE SURE OVERLOAD HAS HAD TIME TO RESET BEFORE CONDEMNING THE COMPRESSOR.

11.1 Evacuation Procedure

Evacuation is the most important part of the entire service procedure. The life and efficiency of the equipment is dependent upon the thoroughness exercised by the serviceman when evacuating air and moisture from the system.

Air in the system causes high condensing temperatures and pressure, resulting in increased power input and non-verifiable performance.

Moisture chemically reacts with the refrigerant and oil to form corrosive hydrofluoric and hydrochloric acids. These attack motor windings and parts, causing breakdown.

After the system has been leak checked and proven sealed, connect the vacuum pump and evacuate system to 500 microns. The vacuum pump must be connected to both the high and low sides of the system through adequate connections. Use the largest size connections available since restrictive service connections may lead to false readings because of pressure drop through the fittings.

IMPORTANT: Compressors (especially scroll type) should never be used to evacuate the air conditioning system because internal electrical arcing may result in a damaged or failed compressor.

With thermostat in the “Off” position, turn the power on to the furnace and the heat pump. Start the heat pump and the furnace with the thermostat. Make sure the blower is operating.

12.0 COMFORT CONTROL SYSTEM

The Integrated Compressor Control (ICC) is an integral part of the Comfort Control System and has the following features:

- Independent compressor and outdoor fan control
- Anti-short cycle protection (3 minute)
- Minimum unit run time (30 seconds)
- 7-segment LED to display status and diagnostics for faster service and accuracy
- High and low pressure switch monitoring
- Power and control voltage monitoring
- Active compressor protection integrated into the control
- Fault Recall capability with power loss memory
- Test Button allows unit operation for start-up diagnostics
- Can be used with a standard thermostat
- Flash diagnostic codes to room thermostat with L terminal
- Sealed compressor relay

12.1 Control Description (see Figure 4)

7-Segment LED

- Displays status and diagnostic codes (See Status and Diagnostic Description)
- Displays diagnostic/fault recall (See Test Mode/Fault Recall)

Red LED (Y1)

- Y1 red LED (solid on) indicates Y1 call from thermostat is present

⚠ CAUTION

UNIT MAY START SUDDENLY AND WITHOUT WARNING
Solid red light indicates a thermostat call for unit operation is present at the ICC control. ICC control will attempt to start unit after short cycle timer expires or when in Active Protection mode will attempt to restart unit prior to Lockout mode.

Line Voltage Connector (ST1)

- Line voltage is connected to control board at Connector ST1
- Maximum wire size accepted is 6 AWG copper wire
- Torque terminals up to 20 in. lbs. max (Check wire terminations annually)

Compressor Wiring Connectors (ST2)

- Compressor wiring assembly is factory installed (Red – Run, Yellow – Start, Black – Common)

Compressor Control (K2)

- Sealed single pole compressor relay switch with optical feedback feature (arc detection)

Thermostat Connector (E2)

- **R** – 24VAC from the indoor unit 24VAC transformer (40 VA minimum)
- **C** – 24VAC Common from the indoor unit 24VAC transformer
- **Y1** – Call for unit operation (cooling)
- **L** – Communicate/flash diagnostic codes to an indoor thermostat that is enabled with an 'L' terminal, 'check service light', or similar function

L Terminal Output

- Flash 1 – Compressor running extremely long run cycle
- Flash 2 – Low or High pressure control trip
- Flash 3 – Unit short cycling
- Flash 5 – Compressor will not run
- Flash 8 – Control mis-operation
- Flash 9 – Low control voltage

Low Volt Fuse

- If required replace with 3 A automotive ATC style blade fuse

Low Pressure Control (LPC Input – E14)

- Low-pressure control is factory installed
- Low pressure control is an automatic resetting device

High Pressure Control (HPC Input – E14)

- High-pressure control is factory installed
- High pressure control is an automatic resetting device

Ambient Temperature Sensor

- Included on control but not required in the cooling only condenser application

TEST and SW2 Buttons

- TEST and SW2 buttons used to enter Test and Fault Recall Mode

FIGURE 4
ICC BOARD

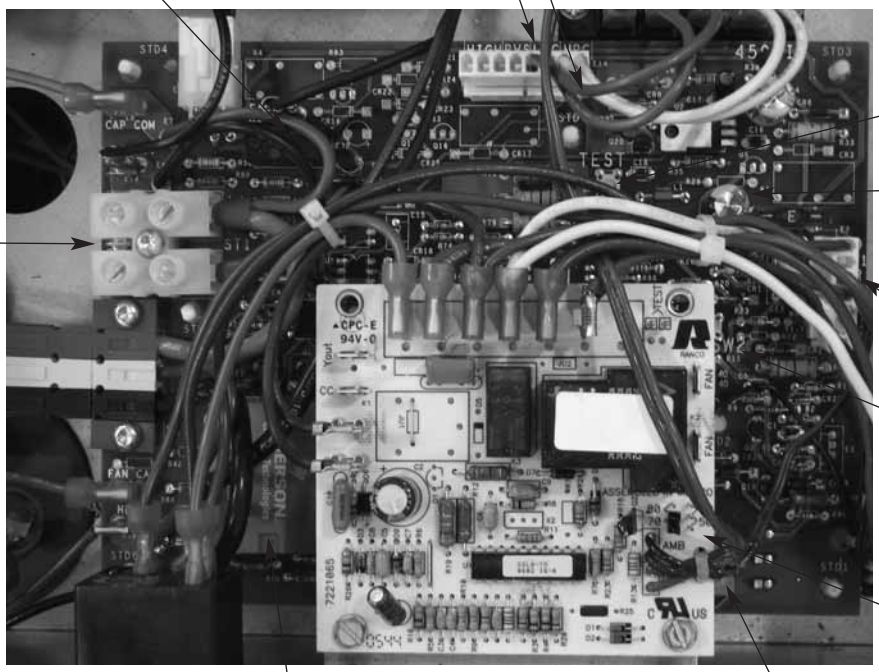

12.2 ICC Control Operation

Installation Verification

- 24V AC power on R and C must be present at the ICC for it to operate
- Line voltage must be present at the ICC for the compressor and the outdoor fan to operate
- When line and 24VAC control voltage is present and there is no Y1 call, or other diagnostics displayed, the control will display an “O” for standby mode
- If a Y1 call is initiated within 3 minutes of unit power-up or last compressor activation the control will display a flashing “c” and the red Led will activate to solid on

Call for Operation (Y1 Call)

- The ICC has an on/off fan delay of one (1) second.
- The ICC ignores state of LPC for 90 seconds upon compressor start
- The ICC will cause the compressor to be energized for 30 seconds minimum run time except when TEST button is pushed without a Y1 call

3-minute Anti-short Cycle Timer

- The ICC has a built in 3-minute time delay between compressor operations to protect the compressor against short cycling (Status flashing c).
- The 3-minute time delay can be bypassed when a Y1 call is present by pressing the TEST button for 1 second and releasing (Status solid on c).

30 Second Minimum Run Timer

- The ICC has a built in 30 second minimum unit run time (Status flashing c).

1 Second Compressor/Fan Delay

- The ICC starts/stops the outdoor fan 1 second after the start/stop of the compressor upon a Y1 call to minimize current inrush and/or voltage droop.

Low Pressure Control (LPC)

- Upon a Y1 call, if the ICC senses an open LPC it will not allow the compressor to be energized (diagnostic code 21).
- The ICC ignores the LPC for 90 seconds after the compressor is energized.
- After 90 seconds of compressor operation (Y1), the ICC responds to the state of the LPC.
- If the LPC opens after 90 seconds of compressor run time the ICC will stop the compressor, display a 21 on the seven-segment display, and flash a 2 on L terminal output
- If there is a Y1 call the compressor will restart upon automatic resetting of the low pressure switch and the 3-minute anti short cycle timer has expired
- Active Protection – If the LPC opens three (3) times during the same call (Y1), the ICC will lockout the compressor to keep it from continuing to operate and flash a L21 on the seven-segment display and continue to flash a 2 on L terminal output

High Pressure Control (HPC)

- Upon Y1 call, the ICC responds to the state of the HPC.
- If the HPC opens during a Y1 call the ICC will stop the compressor, flash a 23 on the seven-segment display, and flash a 2 on L terminal output
- If there is a Y1 call the compressor will restart upon automatic resetting of the high pressure switch and the 3-minute anti short cycle timer has expired
- **Active Protection** – If the HPC opens three (3) times during the same call (Y1), the ICC will lockout the compressor to keep it from continuing to operate and flash a L23 on the seven-segment display and continue to flash a 2 on L terminal output

12.3 Active Compressor Protection Mode

Active Compressor Protection

- The ICC actively protects the compressor from harmful operation during a fault condition.
- The ICC will protect the compressor by locking out if it senses three (3) trips of either low or high pressure controls during the same Y1 call (There are no additional re-tries after a pressure switch lockout)
- The ICC will de-energize the compressor if it senses a compressor fault (will try to restart the compressor for up to 6 hours before a lockout)

Exiting Active Compressor Protection Lockout

There are three methods to reset the ICC after an active protection lockout:

- Cycle line voltage to the unit
- Cycle 24VAC to the ICC (R or C connection)
- Push the TEST button down for 1 second and release (The ICC will attempt to start the unit when the **TEST** button is pressed and released)

12.4 Test and Fault Recall Modes

Test Mode (TEST Button)

- The TEST mode resets the ICC from any active protection lockout mode or bypasses the 3-minute anti-short cycle timer and energizes the unit
- To enter TEST mode press **TEST** button with an insulated probe for 1 second and then release:
  - o If a Y1 call is present and a flashing “c” is indicated on the 7-segment display, a “t” will momentarily flash on the 7-segment display, the unit will energize, and the display will change to a steady “c”
  - o If a Y1 call is not present a steady “t” appears on the 7-segment display and the unit will energize for a maximum of 5 seconds (times out)
- A Y1 call during TEST mode causes the ICC to exit **TEST** and enter a normal unit operation mode
- **Note:** If Y1 is present at the ICC upon exit from TEST mode the unit will continue to operate

Fault Recall Mode (TEST and SW2 Buttons)

- To enter **FAULT RECALL** mode press both **TEST** and **SW2** buttons at the same time with insulated probes for 1 second and release.
- Upon entering and exiting the **FAULT RECALL** mode, the top and bottom segments of the 7-segment display will be activated.
- The ICC control will automatically scroll through stored faults on the 7-segment display.
- Each fault is displayed one time with the top segment of the 7-segment display activated between faults.
- Each fault is displayed with the most recent fault displayed first.
- A maximum of six individual faults can be stored.
- A maximum of 3 consecutive identical faults are stored.
- A “0” will be displayed when no faults are stored.
- The ICC will automatically exit the **FAULT RECALL** mode after displaying stored faults.

Clear Fault History (TEST and SW2 Buttons)

- To clear **FAULT HISTORY** press both **TEST** and **SW2** buttons at the same time with insulated probes for 5 seconds and release.
- The top and bottom segments of the 7-segment display will be activated and flash to indicate the history has been cleared.

12.5 Status and Diagnostic Description

7 -Segment Display Code	Diagnostic Description	Status / Possible Cause -Troubleshooting Information
0	Standby	Standby - No call for operation
c	Y1	First Stage or Single Stage Unit Operation
c Flashing	Anti-Short Cycle Timer (3 minutes) or Minimum Run Timer (30 seconds)	Waiting for anti-short cycle timer to expire Waiting for minimum run timer to expire
F	ICC Board Fuse Open	1. Low voltage wiring damage or miswired
1 (*)	Compressor Running Extremely Long Run Cycle (Cooling mode only)	1. Low refrigerant charge 2. Air ducts have substantial leakage 3. Check thermostat operation 4. Dirty filter 5. Dirty outdoor coil
2 (*)	Pressure Control Trip (L terminal output only)	1. (See faults 21, L21, 23, L23)
21 (***)	Low Pressure Control Trip Note: Low-pressure control is ignored for 90 seconds after call for unit operation. **Active Protection** – The ICC will try to restart the unit after the pressure control automatically re-closes. Unit will try to restart 3 times in the same thermostat call for operation (Y1) before lockout (fault L21).	1. Unit is low on refrigerant charge 2. Indoor coil is frozen (cooling mode) 3. Dirty indoor coil or filter (cooling mode) 4. Indoor blower is not running (cooling mode) 5. TEV is not operating correctly
L21 (**)	Lockout - Low Pressure Control Trip (**)	LPC tripped three consecutive times in same thermostat call
23 (***)	High Pressure Control Trip **Active Protection** – The ICC will try to restart the unit after the pressure control automatically re-closes. Unit will try to restart 3 times in the same thermostat call for operation (Y1) before lockout (fault L23)	1. Outdoor coil is dirty (cooling mode) 2. Outdoor fan is not running (cooling mode) 3. Dirty indoor coil or filter (heat pump mode) 4. Liquid line restriction (filter drier blocked, etc.) 5. Excessive refrigerant charge
L23 (**)	Lockout - High Pressure Control Trip (**)	HPC tripped three consecutive times in same thermostat call
25	Outdoor Ambient Temperature Sensor	1. ICC board sensor damaged (ICC will continue to operate)
27	Abnormal Low Line or No Line Voltage (See unit nameplate for operating voltage)	1. Check incoming line voltage to the disconnect and unit 2. Check wiring connections
28	Abnormal High Line Voltage	1. Check line voltage
3 (*)	Short Cycling	1. Check thermostat for intermittent demand signal 2. Check thermostat location in zone (too close to discharge grill)

5 (*) (***)	Compressor will not run **Active Protection** – After detecting compressor will not run the ICC control will shut the unit down. The control will try to restart the unit every 5 minutes for 4 tries. After that, the ICC will attempt a restart every 20 minutes up to 6 hours.	1. Check for damaged, miswired, or wrong run capacitor 2. Check for damaged or miswired start capacitor and relay 3. Check voltage levels at ICC board and compressor 4. Check for broken wires, loose connectors, or miswired 5. Check compressor motor windings for continuity 6. Check for open compressor internal protector 7. Check for excessive liquid refrigerant in compressor
L5 (**)	Lockout – Check Compressor (**)	After 6 hours of attempted unit restart ICC control
-	ICC Board Mis-operation	1. Check ICC board compressor relay
8 (*)	ICC Board Mis-operation (L terminal output only)	1. Check ICC board compressor relay
9 (*)	ICC Secondary Voltage Low (Less than 18V)	1. Check transformer for miswiring or overloading.

(*) – Indicates flash code will be an output on the ICC **"L"** terminal to the indoor thermostat **"L"** terminal. Unless a diagnostic/fault is manually cleared by cycling power or pressing the TEST button the flash code will continue at the L terminal for up to 20 seconds after the start of a successful call for unit operation.

12.6 L Terminal Output

- Flash 1 – Compressor running extremely long run cycle
- Flash 2 – Low or High pressure control trip
- Flash 3 – Unit short cycling
- Flash 5 – Compressor will not run
- Flash 8 – Control mis-operation
- Flash 9 – Low control voltage

(**) – Lockout modes are reset by either cycling line voltage, low voltage, or by pressing control **TEST** button for 1 second. The control will attempt to start the unit when the **TEST** button is pressed and released (See **TEST** button label)

(***) – Caution: Indicates Active Protection. Unit will attempt to restart automatically.

⚠ CAUTION

UNIT MAY START SUDDENLY AND WITHOUT WARNING
Solid red light indicates a thermostat call for unit operation is present at the ICC. ICC will attempt to start unit after short cycle timer expires or when in Active Protection mode will attempt to restart unit prior to Lockout mode.

NOTE: For Additional Questions or Comments concerning the ICC, call 1-888-923-2323.

12.7 (-)PRL-JEZ Diagnostic Label

FIGURE 5
(-)PRL-JEZ DIAGNOSTIC LABEL

Caution – UNIT MAY START SUDDENLY AND WITHOUT WARNING
Solid red LED light indicates a thermostat call for unit operation is present at the ICC.
ICC will attempt to start unit after short cycle timer expires or when in Active Protection mode will attempt to restart unit prior to Lockout mode.

7 - Segment Display Code	Diagnostic Description	Status / Possible Cause -Troubleshooting Information
0	Standby	Standby - No call for operation
c	Y1	First Stage or Single Stage Unit Operation
C	Y2	Second Stage Unit Operation (2-stage unit only)
c or C Flashing	Anti-Short Cycle Timer (3 minutes) or Minimum Run Timer (30 seconds)	Waiting for anti-short cycle timer to expire Waiting for minimum run timer to expire
d	Defrost	Heat Pump Defrost Operation
d Flashing	Abnormal Defrost Condition (Defrost control exceeds maximum defrost time)	1. Defrost control miswired 2. Faulty defrost control
F	ICC Fuse Open	1. Low voltage wiring damage or miswired
1 (*)	Compressor Running Extremely Long Run Cycle (Cooling mode only)	1. Low refrigerant charge 2. Air ducts have substantial leakage 3. Check thermostat operation 4. Y2 thermostat signal may not be connected (2-stage units only) 5. Dirty outdoor coil
2 (*)	Pressure Control Trip (L terminal output only)	1. (See faults 21, L21, 23, L23)
21 (***)	Low Pressure Control Trip Note: Low-pressure control is ignored for 90 seconds after call for unit operation. **Active Protection** – The ICC will try to restart the unit after the pressure control automatically re-closes. Unit will try to restart 3 times in the same thermostat call for operation (Y1) before lockout (fault L21).	1. Unit is low on refrigerant charge 2. Indoor coil is frozen (cooling mode) 3. Dirty indoor coil or filter (cooling mode) 4. Indoor blower is not running (cooling mode) 5. Outdoor coil is frozen (heat pump mode) 6. Outdoor fan is not running (heat pump mode) 7. TEV is not operating correctly
L 21 (**)	Lockout - Low Pressure Control Trip (**)	LPC tripped three consecutive times in same thermostat call
23 (***)	High Pressure Control Trip **Active Protection** – The ICC will try to restart the unit after the pressure control automatically re-closes. Unit will try to restart 3 times in the same thermostat call for operation (Y1) before lockout (fault L23)	1. Outdoor coil is dirty (cooling mode) 2. Outdoor fan is not running (cooling mode) 3. Dirty indoor coil or filter (heat pump mode) 4. Indoor blower is not running (heat pump mode) 5. Liquid line restriction (filter drier blocked, etc.) 6. Excessive refrigerant charge
L 23 (**)	Lockout - High Pressure Control Trip (**)	HPC tripped three consecutive times in same thermostat call
25	Outdoor Ambient Temperature Sensor	1. ICC sensor damaged (ICC will continue to operate)
27	Abnormal Low Line or No Line Voltage (See unit nameplate for operating voltage)	1. Check incoming line voltage to the disconnect and unit 2. Check wiring connections
28	Abnormal High Line Voltage	1. Check line voltage
3 (*)	Short Cycling	1. Check thermostat for intermittent demand signal 2. Check thermostat location in zone (too close to discharge grill)
5 (*) (***)	Compressor will not run **Active Protection** – After detecting compressor will not run the ICC will shut the unit down. The control will try to restart the unit every 5 minutes for 4 tries. After that, the ICC will attempt a restart every 20 minutes up to 6 hours.	1. Check for damaged, miswired, or wrong run capacitor 2. Check for damaged or miswired start capacitor and relay 3. Check voltage levels at ICC and compressor 4. Check for broken wires, loose connectors, or miswired 5. Check compressor motor windings for continuity 6. Check for open compressor internal protector 7. Check for excessive liquid refrigerant in compressor
L 5 (**)	Lockout – Check Compressor (**)	Lockout after 6 hours of attempted restart
-	ICC Mis-operation	1. Check ICC compressor relay
8 (*)	ICC Mis-operation (L terminal output only)	1. Check ICC compressor relay
9 (*)	ICC Secondary Voltage Low (< 18V)	1. Check transformer for miswiring or overloading.

ICC – Integrated Compressor Control

(*) – Indicates the display code will be flashed as an output on the ICC "L" terminal. For example 2 flashes (blinks) from the "L" terminal output indicates a pressure control trip.
(**) – Lockout modes are reset by removing line voltage, low voltage, or by pressing control **TEST** button for 1 second.
The control will attempt to start the unit when the **TEST** button is pressed and released (See **TEST** button label)
(***) – **Indicates Active Protection. Unit will attempt to restart automatically.**

Red LED Display Code	Diagnostic Description	Status Information
Solid On	Call for Unit Operation	Y1 call is present from the room thermostat at the control

For Additional Questions or Comments concerning the ICC call 1-888-923-2323

92-102221-01-02

12.8 (-)PRL-JEZ Test & Fault Recall Label

FIGURE 6
(-)PRL-JEZ TEST & FAULT RECALL LABEL

TEST MODE MANUAL OPERATION (TEST)

The **TEST** mode resets the ICC (Integrated Compressor Control) from any lockout mode or bypasses compressor anti-short cycle delay timer. To enter **TEST** mode press **TEST** button with insulated probe for 1 second and then release. A ìtî will display on the 7-segment display. The ìtî will remain unless an error is detected or a call for Y1 is present (red LED Y1 is on). A call for Y1 during **TEST** causes the control to exit **TEST** and enter a normal unit operation mode. During **TEST** mode the ICC will continue to activate the unit for up to 5 seconds (times out). To exit **TEST** mode at anytime press **TEST** button with insulated probe for 1 second and release. Note: If Y1 is present the ICC will exit from **TEST** mode the and unit will continue to run.

FAULT RECALL OPERATION (TEST and SW2)

To enter **FAULT RECALL** mode press both **TEST** and **SW2** buttons at the same time with insulated probes for 1 second and release. Upon entering and exiting the **FAULT RECALL** mode, the top and bottom segments of the 7-segment display will be activated. The ICC will automatically scroll through stored faults on the 7-segment display. Each fault is displayed one time with the top segment of the 7-segment display activated between faults. Each fault is displayed with the most recent fault displayed first. An ìOî will be displayed when no faults are stored. The ICC will automatically exit the **FAULT RECALL** mode after displaying stored faults.

An example of one LPC fault and one HPC fault scrolled on the display is as shown below:

CLEAR FAULT HISTORY (TEST and SW2)

To clear **FAULT HISTORY** press both **TEST** and **SW2** buttons at the same time with insulated probes for 5 seconds and release. The top and bottom segments of the 7-segment display will be activated and flash to indicate the history has been cleared.

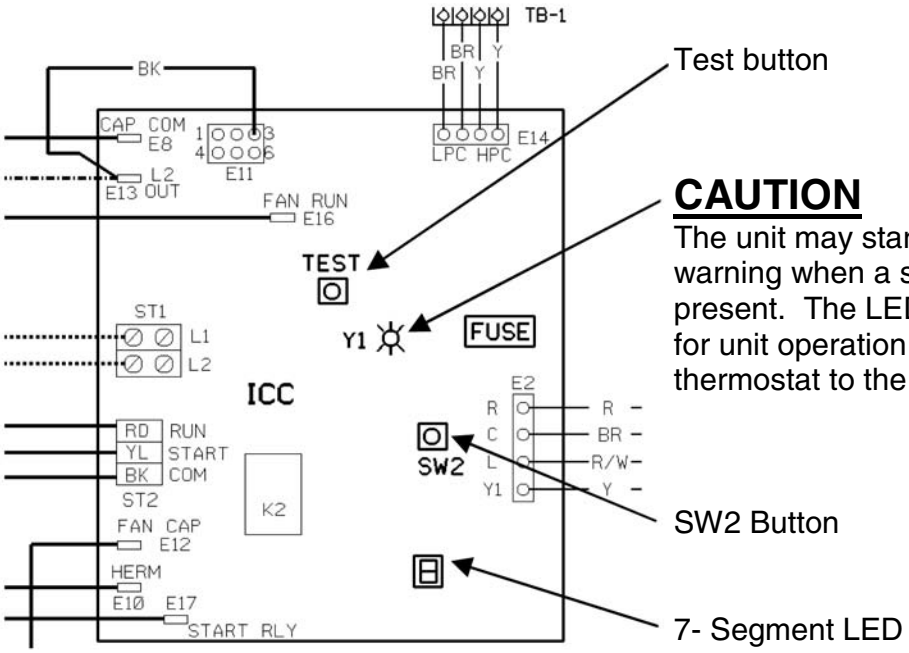

CAUTION

The unit may start suddenly without warning when a solid red LED light is present. The LED light indicates a call for unit operation (Y1) from the thermostat to the ICC control.

92-102221-02-01

13.0 ELECTRICAL WIRING

Field wiring must comply with the National Electric Code (C.E.C. in Canada) and any applicable local code.

13.1 Power Wiring

It is important that proper electrical power from a commercial utility is available at the condensing unit contactor. Voltage ranges for operation are shown in Table 5.

Install a branch circuit disconnect within sight of the unit and of adequate size to handle the starting current (see Table 1).

Power wiring must be run in a rain-tight conduit. Conduit must be run through the connector panel below the access cover (see Figure 1) and attached to the bottom of the control box.

Connect power wiring to contactor located in outdoor condensing unit electrical box. (See wiring diagram attached to unit access panel.)

Check all electrical connections, including factory wiring within the unit and make sure all connections are tight.

DO NOT connect aluminum field wire to the contactor terminals.

TABLE 5
VOLTAGE RANGES (60 HZ)

Nameplate Voltage	Operating Voltage Range at Copeland Maximum Load Design Conditions for Compressors
208/230 (1 Phase)	197 - 253

13.2 Grounding

A grounding lug is provided near the contactor for a ground wire.

⚠ WARNING

THE UNIT MUST BE PERMANENTLY GROUNDED. FAILURE TO DO SO CAN CAUSE ELECTRICAL SHOCK RESULTING IN SEVERE PERSONAL INJURY OR DEATH.

13.3 Control Wiring

If the low voltage control wiring is run in conduit with the power supply, Class I insulation is required. Class II insulation is required if run separate. Low voltage wiring may be run through the insulated bushing provided in the 7/8 hole in the base panel, up to and attached to the pigtails from the bottom of the control box. Conduit can be run to the base panel if desired by removing the insulated bushing.

A thermostat and a 24 volt, 40 VA minimum transformer are required for the control circuit of the condensing unit. The furnace or the air handler transformer may be used if sufficient. See the wiring diagram for reference. Use Table 6 to size the 24 volt control wiring.

TABLE 6
FIELD WIRE SIZE FOR 24 VOLT THERMOSTAT CIRCUITS

Thermostat Load - Amps	SOLID COPPER WIRE - AWG.					
3.0	16	14	12	10	10	10
2.5	16	14	12	12	10	10
2.0	18	16	14	12	12	10
	50	100	150	200	250	300
	Length of Run - Feet (1)					

(1) Wire length equals twice the run distance.

NOTE: Do not use control wiring smaller than No. 18 AWG between thermostat and outdoor unit.

13.4 Typical Thermostat Wiring Diagrams

The following figures show the typical wiring diagrams with (-)HPL air handler and (-)PRL heat pump. Cooling and heat pump airflows may need to be adjusted for homeowner comfort once the system is operational.

WIRE COLOR CODE			
BK – BLACK	G – GREEN	PR – PURPLE	Y – YELLOW
BR – BROWN	GY – GRAY	R – RED	
BL – BLUE	O – ORANGE	W – WHITE	

FIGURE 7
TYPICAL 2-STAGE THERMOSTAT: HEAT PUMP WITH ELECTRIC HEAT

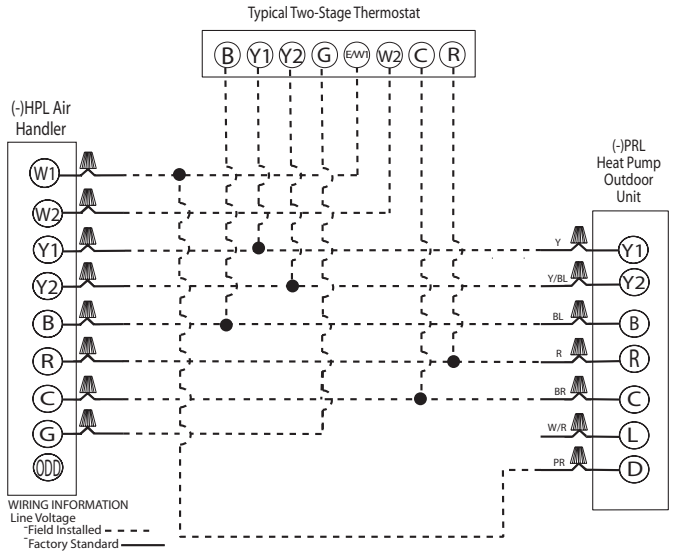

FIGURE 8
TYPICAL TWO-STAGE THERMOSTAT: (-)PRL HEAT PUMP WITH ELECTRIC HEAT USING A HUMIDISTAT FOR DEHUMIDIFICATION*.

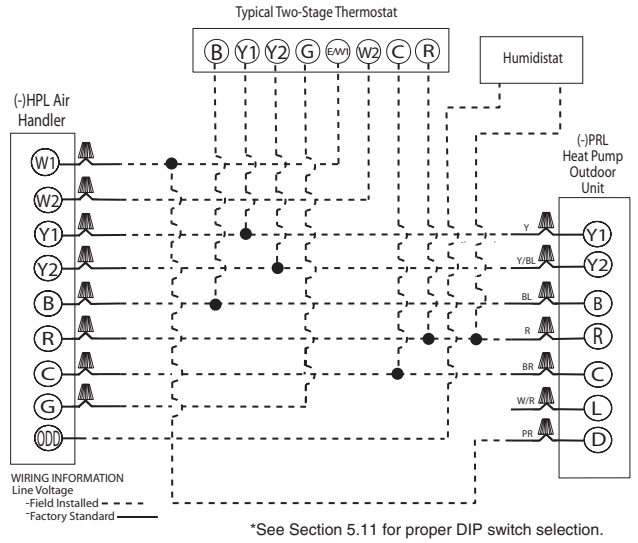

*See Section 5.11 for proper DIP switch selection.

FIGURE 9
TYPICAL TWO-STAGE THERMOSTAT: (-)PRL HEAT PUMP WITH ELECTRIC HEAT USING A TWO-STAGE THERMOSTAT WITH DEHUMIDIFICATION*

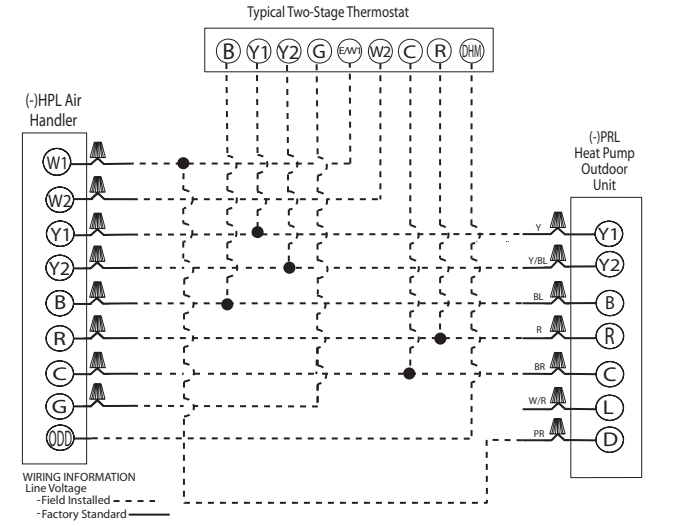

FIGURE 10
(-)PRL HEAT PUMP WITH ELECTRIC HEAT USING A TWO-STAGE THERMOSTAT WITH DEHUMIDIFICATION* AND A MALFUNCTION LIGHT

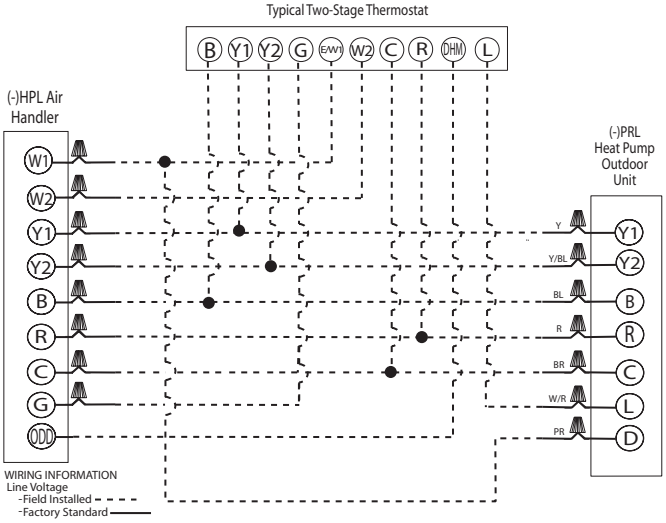

FIGURE 11
TYPICAL DUAL FUEL APPLICATION - TWO STAGE HEAT PUMP

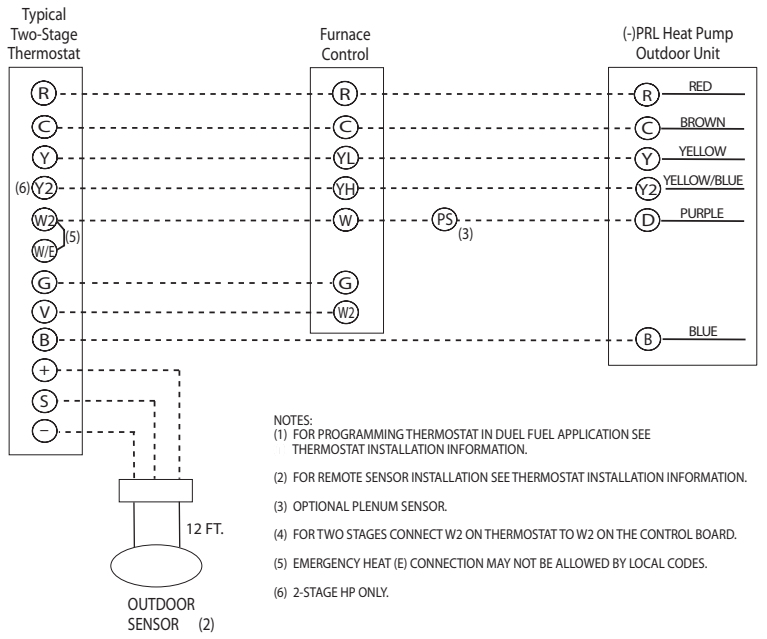

14.0 START-UP AND PERFORMANCE

Even though the unit is factory charged with Refrigerant-410A, the charge must be checked to the charge table attached to the service panel and adjusted, if required. Allow a minimum of 5 minutes running. Before analyzing charge, see the instructions on the unit service panel rating plate for marking the total charge.

At initial start-up or after extended shutdown periods, make sure the heater is energized for at least 12 hours before the compressor is started. (Disconnect switch on and wall thermostat off.)

15.0 CHECKING AIRFLOW

The air distribution system has the greatest effect on airflow. The duct system is totally controlled by the contractor. For this reason, the contractor should use only industry-recognized procedures.

The correct air quantity is critical to air conditioning systems. Proper operation, efficiency, compressor life, and humidity control depend on the correct balance between indoor load and outdoor unit capacity. Excessive indoor airflow increases the possibility of high humidity problems. Low indoor airflow reduces total capacity, and causes coil icing. Serious harm can be done to the compressor by low airflow, such as that caused by refrigerant flooding.

Heat pump systems require a specified airflow. Each ton of cooling requires between 340 and 450 cubic feet of air per minute (CFM).

Duct design and construction should be carefully done. System performance can be lowered dramatically through bad planning or workmanship.

Air supply diffusers must be selected and located carefully. They must be sized and positioned to deliver treated air along the perimeter of the space. If they are too small for their intended airflow, they become noisy. If they are not located properly, they cause drafts. Return air grilles must be properly sized to carry air back to the blower. If they are too small, they also cause noise.

The installers should balance the air distribution system to ensure proper quiet airlow to all rooms in the home. This ensures a comfortable living space.

These simple mathematical formulas can be used to determine the CFM in a residential or light commercial system.

Electric resistance heaters can use

$$\text{CFM} = \frac{\text{volts x amps x 3.414}}{\text{1.08 x temp rise}}$$

Gas furnaces can use

$$CFM = \frac{BTUH}{\Delta T \times 1.08}$$

An air velocity meter or airflow hood can give a more accurate reading of the system CFM's.

16.0 CHECKING REFRIGERANT CHARGE

Charge for all systems should be checked against the Charging Chart inside the access panel cover. Before using the chart, the indoor conditions must be within 2°F of desired comfort conditions and system must be run until operating conditions stabilize (15 min. to 30 min.)

⚠ CAUTION

THE TOP OF THE SCROLL COMPRESSOR SHELL IS HOT. TOUCHING THE COMPRESSOR TOP MAY RESULT IN SERIOUS PERSONAL INJURY.

IMPORTANT: Use industry-approved charging methods to ensure proper system charge.

16.1 Charging units with R-410A Refrigerant

Charge for all systems should be checked against the Charging Chart inside the access panel cover.

IMPORTANT: Do not operate the compressor without charge in system.

Addition of R-410A will raise pressures (vapor, liquid and discharge).

If adding R-410A raises both vapor pressure and temperature, the unit is overcharged.

IMPORTANT: Use industry-approved charging methods to ensure proper system charge.

⚠ CAUTION

R-410A PRESSURES ARE APPROXIMATELY 60% HIGHER THAN R-22 PRESSURES. USE APPROPRIATE CARE WHEN USING THIS REFRIGERANT. FAILURE TO EXERCISE CARE MAY RESULT IN EQUIPMENT DAMAGE, OR PERSONAL INJURY.

16.2 Charging By Liquid Pressure

Liquid pressure method is used for charging systems in the cooling and heating mode. The service port on the liquid service valve (small valve) and suction (large valve) is used for this purpose.

Verify that the outdoor unit is running and the indoor air mover is delivering the maximum airflow for this system size. Read and record the outdoor ambient temperature. Read and record the liquid and suction pressures at the ports on the liquid and suction valves. If refrigerant lines are sized using the nameplate charge, the correct liquid pressure is found at the intersection of the suction pressure and the outdoor ambient.

1. Remove refrigerant charge if the liquid pressure is above the chart value.
2. Add refrigerant charge if the liquid pressure is below the chart value.

16.3 Charging By Weight

For a new installation, evacuation of interconnecting tubing and indoor coil is adequate; otherwise, evacuate the entire system. Use the factory charge shown in Table 1 of these instructions or unit data plate. Note that charge value includes charge required for 25 ft. of standard size interconnecting liquid line. Calculate actual charge required with installed liquid line size and length using:

1/4” O.D. = .3 oz./ft.
5/16” O.D. = .4 oz./ft.
3/8” O.D. = .6 oz./ft.
1/2” O.D. = 1.2 oz./ft.

With an accurate scale (+/– 1 oz.) or volumetric charging device, adjust charge difference between that shown on the unit data plate and that calculated for the new system installation. If the entire system has been evacuated, add the total calculated charge.

16.4 Final Leak Testing

After the unit has been properly evacuated and charged, a halogen leak detector should be used to detect leaks in the system. All piping within the condensing unit, evaporator, and interconnecting tubing should be checked for leaks. If a leak is detected, the refrigerant should be recovered before repairing the leak. The Clean Air Act prohibits releasing refrigerant into the atmosphere.

⚠ WARNING

TURN OFF ELECTRIC POWER AT THE FUSE BOX OR SERVICE PANEL BEFORE MAKING ANY ELECTRICAL CONNECTIONS.

ALSO, THE GROUND CONNECTION MUST BE COMPLETED BEFORE MAKING LINE VOLTAGE CONNECTIONS. FAILURE TO DO SO CAN RESULT IN ELECTRICAL SHOCK, SEVERE PERSONAL INJURY OR DEATH.

17.0 TROUBLESHOOTING

IMPORTANT: The JEZ series units with the ICC (Integrated Compressor Control) provide status and diagnostic information that greatly enhances the ability to quickly diagnose system faults. Use the following troubleshooting guides as another tool in system diagnostics.

NOTE: In diagnosing common faults in the cooling system, develop a logical thought pattern as used by experienced technicians. The charts which follow are not intended to be an answer to all problems but only to guide the technician’s troubleshooting. Through a series of yes and no answers, follow the logical path to a likely conclusion.

A novice technician should use these charts like a road map. Remember that the chart should clarify a logical path to the solution.

17.1 Electrical Checks Flow Chart

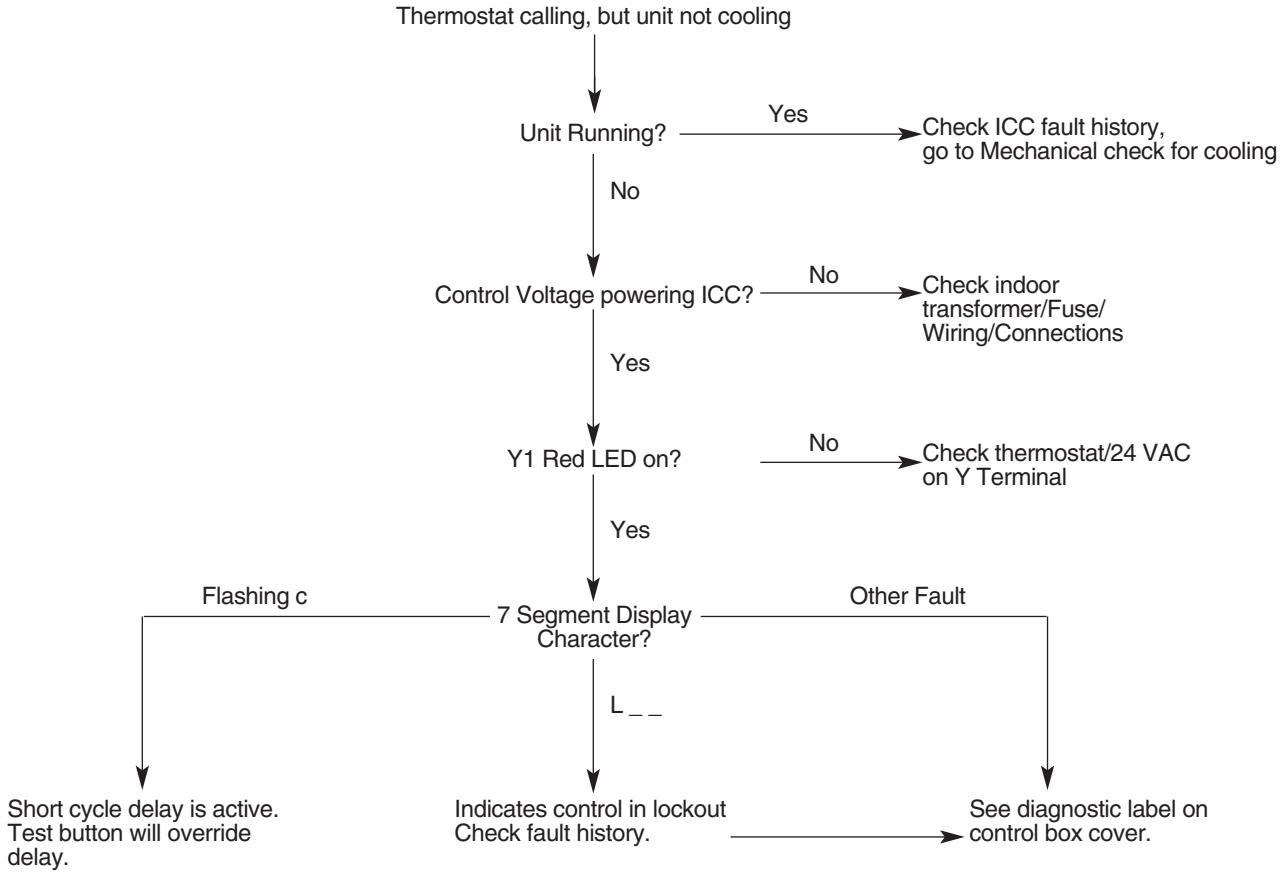

17.2 Cooling Mechanical Checks Flow Chart

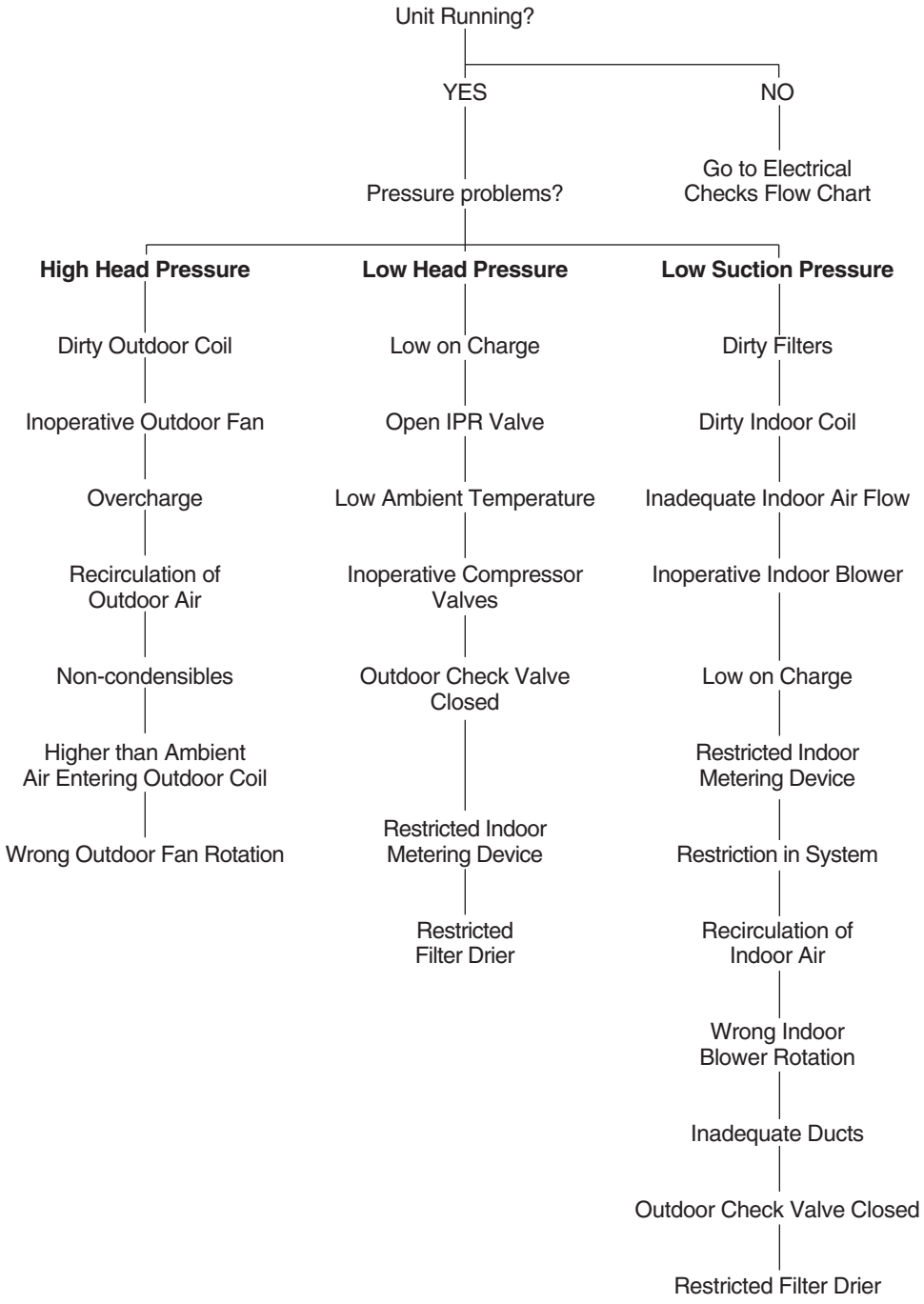

17.3 Defrost Mechanical Checks Flow Chart

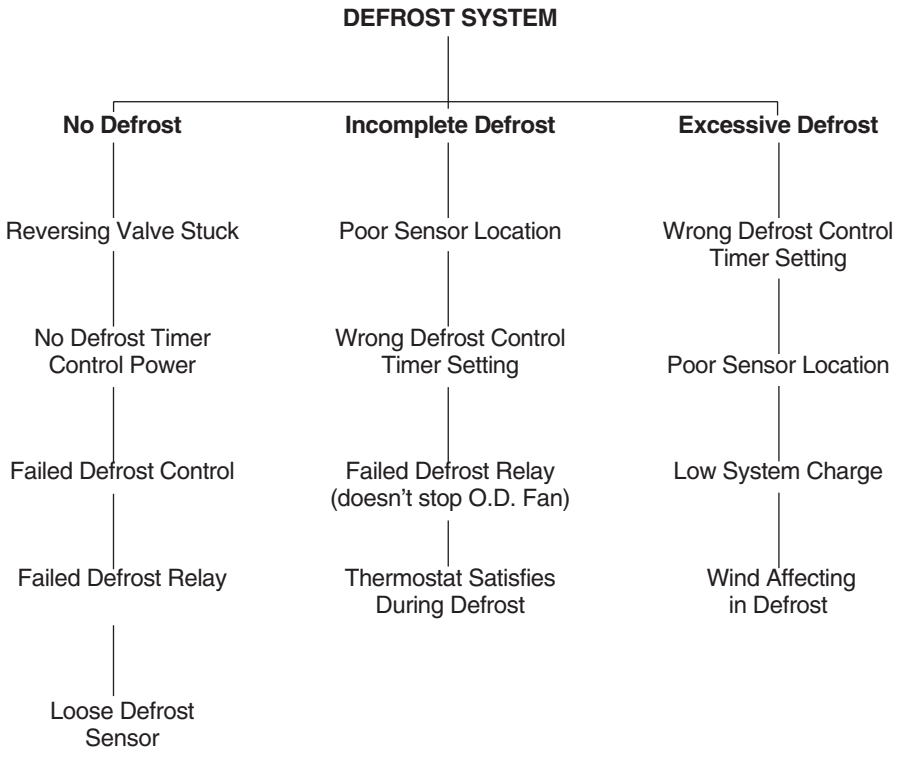

17.4 General Trouble Shooting Chart

⚠ WARNING

DISCONNECT ALL POWER TO UNIT BEFORE SERVICING. CONTACTOR MAY BREAK ONLY ONE SIDE. FAILURE TO SHUT OFF POWER CAN CAUSE ELECTRICAL SHOCK RESULTING IN PERSONAL INJURY OR DEATH.

SYMPTOM	POSSIBLE CAUSE	REMEDY
Unit will not run	• Power off or loose electrical connection • Thermostat out of calibration-set too high • Defective contactor • Blown fuses / tripped breaker • Transformer defective • High pressure control open (if provided)	• Check for correct voltage at contactor in condensing unit • Reset • Check for 24 volts at contactor coil - replace if contacts are open • Replace fuses / reset breaker • Check wiring-replace transformer • Reset-also see high head pressure remedy-The high pressure control opens at 450 PSIG
Outdoor fan runs, compressor doesn't	• Run or start capacitor defective • Start relay defective • Loose connection • Compressor stuck, grounded or open motor winding, open internal overload. • Low voltage condition	• Replace • Replace • Check for correct voltage at compressor - check & tighten all connections • Wait at least 2 hours for overload to reset. If still open, replace the compressor. • Add start kit components
Insufficient cooling	• Improperly sized unit • Improper indoor airflow • Incorrect refrigerant charge • Air, non-condensibles or moisture in system	• Recalculate load • Check - should be approximately 400 CFM per ton. • Charge per procedure attached to unit service panel • Recover refrigerant, evacuate & recharge, add filter drier
Compressor short cycles	• Incorrect voltage • Defective overload protector • Refrigerant undercharge	• At compressor terminals, voltage must be ± 10% of nameplate marking when unit is operating. • Replace - check for correct voltage • Add refrigerant
Registers sweat	• Low indoor airflow	• Increase speed of blower or reduce restriction - replace air filter
High head-low vapor pressures	• Restriction in liquid line, expansion device or filter drier • Flowcheck piston size too small • Incorrect capillary tubes	• Remove or replace defective component • Change to correct size piston • Change coil assembly
High head-high or normal vapor pressure - Cooling mode	• Dirty outdoor coil • Refrigerant overcharge • Outdoor fan not running • Air or non-condensibles in system	• Clean coil • Correct system charge • Repair or replace • Recover refrigerant, evacuate & recharge
Low head-high vapor pressures	• Flowcheck piston size too large • Defective Compressor valves • Incorrect capillary tubes	• Change to correct size piston • Replace compressor • Replace coil assembly
Low vapor - cool compressor - iced indoor coil	• Low indoor airflow • Operating below 65°F outdoors • Moisture in system	• Increase speed of blower or reduce restriction - replace air filter • Add Low Ambient Kit • Recover refrigerant - evacuate & recharge - add filter drier
High vapor pressure	• Excessive load • Defective compressor	• Recheck load calculation • Replace
Fluctuating head & vapor pressures	• TXV hunting • Air or non-condensibles in system	• Check TXV bulb clamp - check air distribution on coil - replace TXV • Recover refrigerant, evacuate & recharge
Gurgle or pulsing noise at expansion device or liquid line	• Air or non-condensibles in system	• Recover refrigerant, evacuate & recharge

17.5 Service Analyzer Charts

COMPRESSOR OVERHEATING		
SYMPTOMS	**POSSIBLE CAUSE**	**CHECK/REMEDIES**
High superheat	Low charge	Check system charge
	Faulty metering device	Restricted cap tube, TEV (TXV)
		Power element superheat adjustment
		Foreign matter stopping flow
	High internal load	Hot air (attic) entering return
		Heat source on; mis-wired or faulty control
	Restriction in liquid line	Drier plugged
		Line kinked
	Low head pressure	Low charge
		Operating in low ambient temperatures
	Suction or liquid line subjected to high heat source	Hot attic
		Hot water line
Low voltage	Loose wire connections	Check wiring
	Dirty or pitted compressor contactor contacts	Replace contactor
	Power company problem, transformer	Have problem corrected before diagnosis continues
	Undersized wire feeding unit	Correct and complete diagnosis
High voltage	Power company problem	Have problem corrected
High head pressure	Overcharge	Check system charge
	Dirty heat pump coil	Clean coil
	Faulty or wrong size heat pump fan motor	Replace fan motor
	Faulty fan blade or wrong rotation	Replace fan blade
		Replace with correct rotation motor
	Recirculation of air	Correct installation
	Additional Heat Source	Check for dryer vent near unit
		Check for recirculation from other equipment
	Non-condensibles	Recover refrigerant, Evacuate and recharge system
	Equipment not matched	Correct mis-match
Short cycling of compressor	Faulty pressure control	Replace pressure control
	Loose wiring	Check unit wiring
	Thermostat	Located in supply air stream
		Differential setting too close
		Customer misuse
	TEV	Internal foreign matter
		Power element failure
		Valve too small
		Distributor tube/tubes restricted
	Capillary tube	Restricted with foreign matter
		Kinked
		I.D. reduced from previous compressor failure

SYMPTOMS	POSSIBLE CAUSE	CHECK OR REMEDIES
Short cycling of compressor (cont.)	Low charge	Check system charge
	Low evaporator air flow	Dirty coil
		Dirty filter
		Duct too small or restricted
	Faulty run capacitor	Replace
	Faulty internal overload	Replace compressor
Faulty Compressor Valves	Fast equalization/ Low pressure difference	Replace compressor and examine system to locate reason
ELECTRICAL		
SYMPTOMS	**POSSIBLE CAUSE**	**CHECK OR REMEDIES**
Voltage present on load side of compressor contactor and compressor won't run	Compressor start components	Check start capacitor
		Check potential relay
	Run capacitor	Check with ohmmeter
	Internal overload	Allow time to reset
	Compressor windings	Check for correct ohms
Voltage present on line side of pressor contactor only	Thermostat	Check for control voltage to com-contactor coil
	Compressor control circuit	High pressure switch
		Low pressure switch
		Ambient thermostat
		Solid state protection control or internal thermal sensors
		Compressor timed off/on control or interlock
No voltage on line side of compressor contactor	Blown fuses or tripped circuit breaker	Check for short in wiring or unit
	Improper wiring	Re-check wiring diagram
Improper voltage	High voltage	Wrong unit
		Power supply problem
	Low voltage	Wrong unit
		Power supply problem
		Wiring undersized
		Loose connections
	Single Phasing (3 phase)	Check incoming power and fusing
CONTAMINATION		
SYMPTOMS	**POSSIBLE CAUSE**	**CHECK OR REMEDIES**
Moisture	Poor evacuation on installation or during service	In each case, the cure is the same. Recover refrigerant. Add filter drier, evacuate and re-charge
High head pressure	Non-condensibles air	
Unusual head and suction readings	Wrong refrigerant	
Foreign Matter- copper filings	Copper tubing cuttings	
Copper oxide	Dirty copper piping	
Welding scale	Nitrogen not used	
Soldering flux	Adding flux before seating copper part way	
Excess soft solder	Wrong solder material	

LOSS OF LUBRICATION		
SYMPTOMS	**POSSIBLE CAUSE**	**CHECK OR REMEDIES**
Compressor failures	Line tubing too long	Add oil to the recommended level
	Line tubing too large	Reduce pipe size to improve oil return
Low suction pressure	Low charge	Check system charge
	Refrigerant leaks	Repair and recharge
Cold, Noisy compressor - Slugging	Dilution of Oil with Refrigerant	Observe piping guidelines
Noisy compressor	Migration	Check crankcase heater
Cold, sweating compressor	Flooding	Check system charge
Low Load	Reduced air flow	Dirty filter
		Dirty coil
		Wrong duct size
		Restricted duct
	Thermostat setting	Advise customer
Short cycling of compressor	Faulty pressure control	Replace control
	Loose wiring	Check all control wires
	Thermostat	In supply air stream, out of calibration,
		Customer misuse
FLOODED STARTS		
SYMPTOMS	**POSSIBLE CAUSES**	**CHECK OR REMEDIES**
Liquid in the compressor shell	Faulty or missing crankcase heater	Replace crankcase heater
Too much liquid in system	Incorrect piping	Check Piping guidelines
	Overcharge	Check and adjust charge
SLUGGING		
SYMPTOMS	**POSSIBLE CAUSES**	**CHECK OR REMEDIES**
On start up	Incorrect piping	Review pipe size guidelines
TEV hunting when running	Oversized TEV	Check TEV application
FLOODING		
SYMPTOMS	**POSSIBLE CAUSES**	**CHECK OR REMEDIES**
Poor system control using a TEV	Loose sensing bulb	Secure the bulb and insulate
	Bulb in wrong location	Relocate bulb
	Wrong size TEV	Use correct replacement
	Improper superheat setting	Adjust, if possible; Replace, if not
Poor system control using capillary tubes	Overcharge	Check system charge
	High head pressures	Dirty heat pump
		Restricted air flow
		Recirculation of air
	Evaporator air flow too low	Adjust air flow to 400 CFM/Ton

THERMOSTATIC EXPANSION VALVES

SYMPTOMS	POSSIBLE CAUSE	CHECK OR REMEDIES
High Superheat, Low Suction Pressure	Moisture freezing and blocking valve	Recover charge, install filter-drier, evacuate system, recharge
	Dirt or foreign material blocking valve	Recover charge, install filter-drier, evacuate system, recharge
	Low refrigerant charge	Correct the charge
	Vapor bubbles in liquid line	Remove restriction in liquid line Correct the refrigerant charge
		Remove non-condensible gases
		Size liquid line correctly
	Misapplication of internally equalized valve	Use correct TEV
	Plugged external equalizer line	Remove external equalizer line restriction
	Undersized TEV	Replace with correct valve
	Loss of charge from power head sensing bulb	Replace power head or complete TEV
	Charge migration from sensing bulb to power head (Warm power head with warm, wet cloth. Does valve operate correctly now?)	Ensure TEV is warmer than sensing bulb
	Improper superheat adjustment (Only applicable to TEV with adjustable superheat settings)	Adjust superheat setting counter-clockwise
Valve feeds too much refrigerant, with low superheat and higher than mal suction pressure	Moisture causing valve to stick open.	Recover refrigerant, replace filter-drier, evacuate system and then nor-recharge
	Dirt or foreign material causing valve to stick open	Recover refrigerant, replace filter-drier, evacuate system and recharge
	TEV seat leak (A gurgling or hissing sound is heard AT THE TEV during the off cycle, if this is the cause.) NOT APPLICABLE TO BLEED PORT VALVES.	Replace the TEV
	Oversized TEV	Install correct TEV
	Incorrect sensing bulb location	Install bulb with two mounting straps, in 2:00 or 4:00 position on suction line, with insulation
	Low superheat adjustment (only applicable to TEV with adjustable superheat setting)	Turn superheat adjustment clockwise
	Incorrectly installed, or restricted external equalizer line	Remove restriction, or relocate external equalizer
Compressor flood back upon start up	Refrigerant drainage from flooded evaporator	Install trap riser to the top of the evaporator coil
	Compressor in cold location	Install crankcase heater on compressor
	Any of the causes listed under Symptoms of Problem #2	Any of the solutions listed under Solutions of Problem #2

THERMOSTATIC EXPANSION VALVES

SYMPTOMS	POSSIBLE CAUSE	CHECK OR REMEDIES
Superheat is low to normal with low suction pressure	Unequal evaporator circuit loading	Ensure air flow is equally distributed through evaporator
		Check for blocked distributor tubes
	Low load or airflow entering evaporator coil	Ensure blower is moving proper air CFM
		Remove/Correct any air flow restriction
Superheat and suction pressure fluctuate (valve is hunting)	Expansion valve is oversized	Install correct TEV
	Sensing bulb is affected by liquid refrigerant or refrigerant oil flowing through suction line	Relocate sensing bulb in another position around the circumference of the suction line
	Unequal refrigerant flow through evaporator circuits	Ensure sensing bulb is located properly
		Check for blocked distributor tubes
	Improper superheat adjustment (only possible with TEV having superheat adjustment)	Replace TEV or adjust superheat
	Moisture freezing and partially blocking TEV	Recover refrigerant, change filter-drier, evacuate system and recharge
Valve does not regulate at all	External equalizer line not connected or line plugged	Connect equalizer line in proper location, or remove any blockage
	Sensing bulb lost its operating charge	Replace TEV
	Valve body damaged during soldering or by improper installation	Replace TEV

TABLE 7
TEMPERATURE PRESSURE CHART

TEMP (Deg. F)	R-410A PSIG
-150	—
-140	—
-130	—
-120	—
-110	—
-100	—
-90	—
-80	—
-70	—
-60	0.4
-50	5.1
-40	10.9
-35	14.2
-30	17.9
-25	22.0
-20	26.4
-15	31.3
-10	36.5
-5	42.2
0	48.4
5	55.1
10	62.4
15	70.2
20	78.5
25	87.5
30	97.2
35	107.5
40	118.5
45	130.2
50	142.7
55	156.0
60	170.1
65	185.1
70	201.0
75	217.8
80	235.6
85	254.5
90	274.3
95	295.3
100	317.4
105	340.6
110	365.1
115	390.9
120	418.0
125	446.5
130	476.5
135	508.0
140	541.2
145	576.0
150	612.8

17.6 Subcooling Calculation

1. Measure the liquid pressure at the liquid line service valve.
2. Convert the liquid line pressure to saturated temperature. See Table 7.
3. Measure the liquid line temperature at the liquid line service valve.
4. Compare the liquid line temperature to the saturated temperature.
5. The difference between saturated temperature and liquid line temperature is the subcooling. Subcooling normal range 9° to 12°.

NOTE: The subcooling charging method should only be used in the cooling mode as the heating subcooling design level varies widely from one unit to the next while the cooling subcooling design level is fairly consistent at 8-12 degrees.

TABLE 8
AIR CONDITIONING SYSTEM TROUBLESHOOTING TIPS

HEAT PUMP SYSTEM TROUBLESHOOTING TIPS					
SYSTEM PROBLEM	INDICATORS				
	DISCHARGE PRESSURE	SUCTION PRESSURE	SUPERHEAT	SUBCOOLING	COMPRESSOR AMPS
Overcharge	High	High	Low	High	High
Undercharge	Low	Low	High	Low	Low
Liquid Restriction (Drier)	Low	Low	High	High	Low
Low Evaporator Airflow	Low	Low	Low	Low	Low
Dirty Heat Pump	High	High	Low	Low	High
Low Outside Ambient Temperature	Low	Low	High	High	Low
Inefficient Compressor	Low	High	High	High	Low
TXV Feeler Bulb Charge Lost	Low	Low	High	High	Low
Poorly Insulated Sensing Bulb	High	High	Low	Low	High

18.0 WIRING DIAGRAMS

FIGURE 12
WIRING DIAGRAM FOR 2, 3, & 4 TON

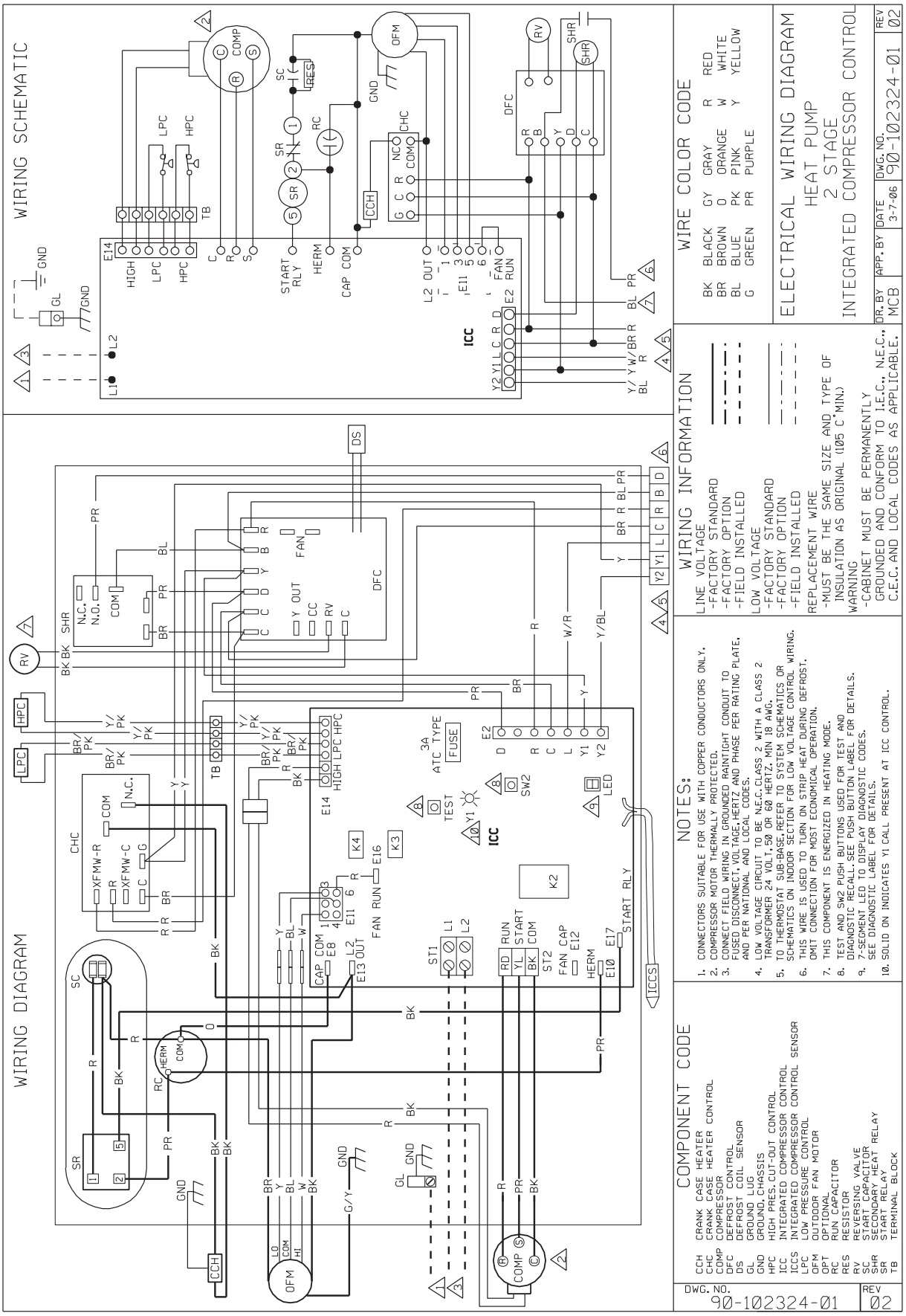
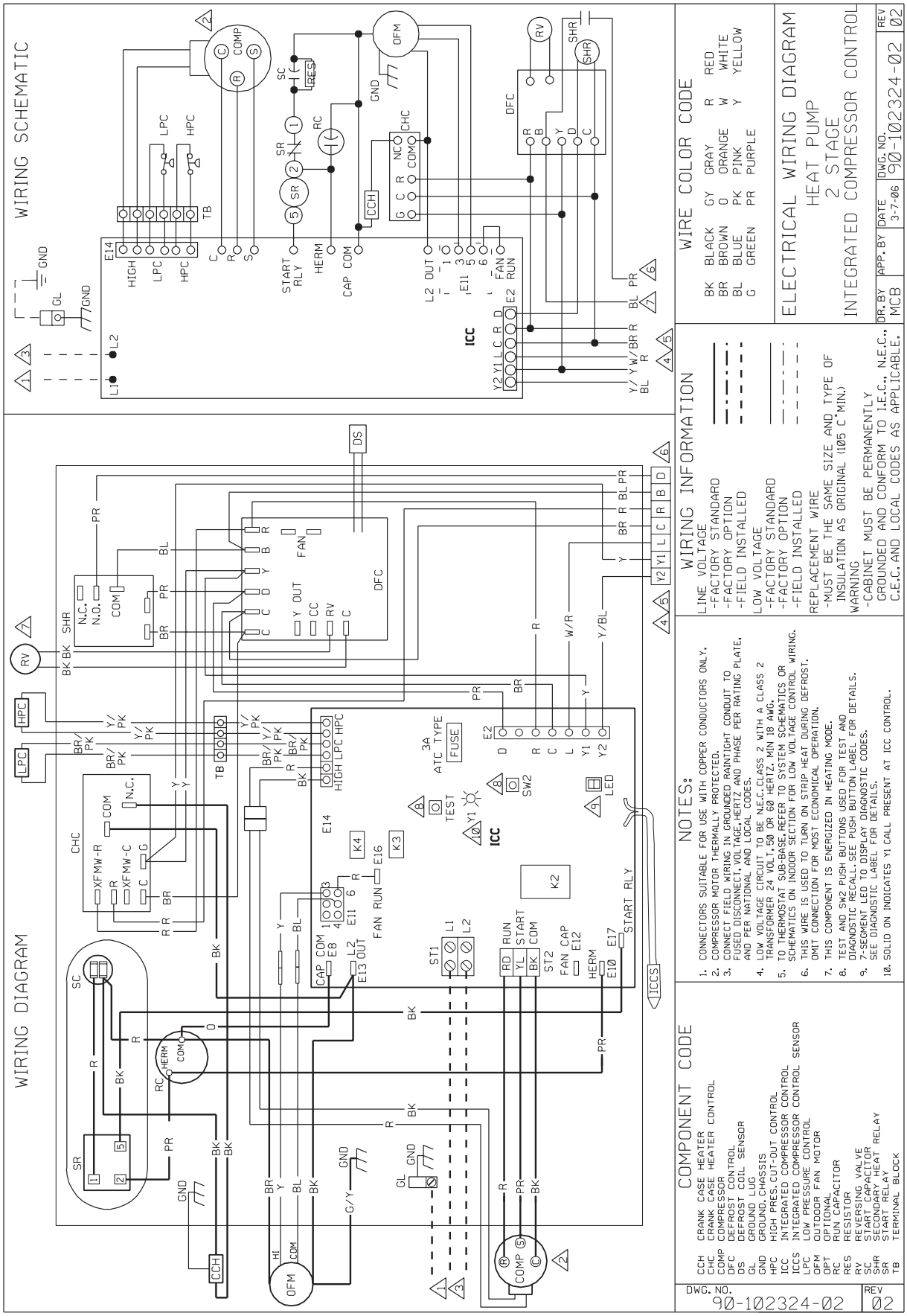
FIGURE 13
WIRING DIAGRAM FOR 5 TON