Cat® D200 GC
Diesel Generator Sets

Standby : 60 Hz

Image shown might not reflect actual configuration.

Engine Model	Cat® C7.1 ACERT In-line 6, 4-cycle diesel
Bore x Stroke	105 mm x 135 mm (4.1 in x 5.3 in)
Displacement	7.01 L (428 in³)
Compression Ratio	16.7:1
Aspiration	Turbocharged Air-to-Air-Aftercooled
Fuel Injection System	Electronic, Common Rail
Governor	Electronic ADEM™ A4

Model	Standby	Emission Strategy
D200 GC	**250 kVA, 200 ekW**	**EPA TIER III**

PACKAGE PERFORMANCE

Performance	**Standby**
Frequency	60 Hz
Genset Power Rating	250 kVA
Genset power rating with fan, 3p@ 0.8 & 1p@1.0 power factor	200 eKW
Performance Number	P4364A
Fuel Consumption	
100% load with fan, L/hr (gal/hr)	56.4 (14.9)
75% load with fan, L/hr (gal/hr)	45.8 (12.1)
50% load with fan, L/hr (gal/hr)	32.6 (8.6)
25% load with fan, L/hr (gal/hr)	14.3 (3.7)
Cooling System[1]	
Radiator air flow restriction (system), kPa (in. Water)	0.12 (0.48)
Engine coolant capacity, L (gal)	9.5 (2.5)
Radiator coolant capacity, L (gal)	11.5 (3.0)
Inlet Air	
Combustion air inlet flow rate, m³/min (cfm)	15.8 (558)
Max. Allowable Combustion Air Inlet Temp, °C (°F)	51 (124)
Exhaust System	
Exhaust stack gas temperature, °C (°F)	533 (991)
Exhaust gas flow rate, m³/min (cfm)	38.3 (1353)
Exhaust system backpressure (maximum allowable) kPa (in. water)	15.0 (60.2)
Heat Rejection	
Heat rejection to jacket water, kW (Btu/min)	91.8 (5221)
Heat rejection to exhaust (total) kW (Btu/min)	183.0 (10407)
Heat rejection to aftercooler, kW (Btu/min)	45.0 (2559)
Heat rejection to atmosphere from engine, kW (Btu/min)	35.3 (2019)

D200 GC Diesel Generator Sets
Electric Power

Emissions (Nominal)[2]	Standby		
NOx + HC, g/kW-hr	3.73		
CO, g/kW-hr	1.31		
PM, g/kW-hr	0.18		
Alternator[3]			
Voltages	480V	208V	600V
Motor starting capability @ 30% Voltage Dip, skVA	361	333	780
Current Amps	301	694	241
Frame Size	M2294L4	M2736L4	M2736L4
Excitation	SE	SE	AREP
Temperature Rise, °C	130	130	105

WEIGHTS & DIMENSIONS

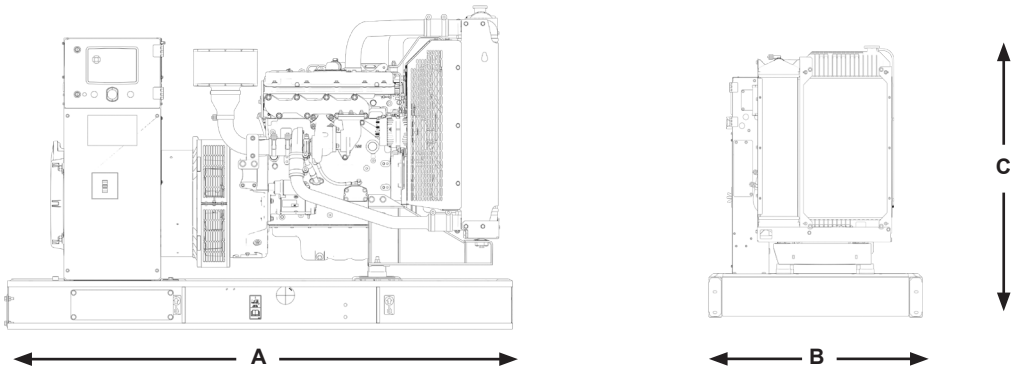

Note: General configuration not to be used for installation. See general dimension drawings for detail.

Dim "A" mm (in)	Dim "B" mm (in)	Dim "C" mm (in)	Dry Weight kg (lb)
2634 (103.7)	**1300 (51.2)**	**1492 (58.7)**	**1777 (3917)**

APPLICABLE CODES AND STANDARDS:

AS1359, CSA C22.2 No100-04, UL142, UL489, UL869, UL2200, NFPA37, NFPA70, NFPA99, NFPA110, IBC, IEC60034-1, ISO3046, ISO8528, NEMA MG1-22, NEMA MG1-33, 2006/95/EC, 2006/42/EC, 2004/108/EC.
Note: Codes may not be available in all model configurations. Please consult your local Cat Dealer representative for availability.

STANDBY: Output available with varying load for the duration of the interruption of the normal source power. Average power output is 70% of the standby power rating. Typical operation is 200 hours per year, with maximum expected usage of 500 hours per year.

PRIME: Output available with varying load for an unlimited time. Average power output is 70% of the prime power rating. Typical peak demand is 100% of prime rated ekW with 10% overload capability for emergency use for a maximum of 1 hour in 12. Overload operation cannot exceed 25 hours per year

RATINGS: Ratings are based on SAE J1349 standard conditions. These ratings also apply at ISO3046 standard conditions.

DEFINITIONS AND CONDITIONS

[1] For ambient and altitude capabilities consult your Cat dealer. Air flow restriction (system) is added to existing restriction from factory.

[2] Emissions data measurement procedures are consistent with those described in EPA CFR 40 Part 89, Subpart D & E and ISO8178-1 for measuring HC, CO, PM, NOx. Data shown is based on steady state operating conditions of 77° F, 28.42 in HG and number 2 diesel fuel with 35° API and LHV of 18,390 BTU/lb. The nominal emissions data shown is subject to instrumentation, measurement, facility and engine to engine variations. Emissions data is based on 100% load and thus cannot be used to compare to EPA regulations which use values based on a weighted cycle.

[3] UL 2200 Listed packages may have oversized generators with a different temperature rise and motor starting characteristics. Generator temperature rise is based on a 40° C ambient per NEMA MG1-32.

LET'S DO THE WORK.™

LEHE2668-01 (01/21)

www.Cat.com/electricpower
All rights reserved.
Materials and specifications are subject to change without notice.The International System of Units (SI) is used in this publication.
© 2020 Caterpillar. All Rights Reserved. CAT, CATERPILLAR, LET'S DO THE WORK, their respective logos, "Caterpillar Corporate Yellow", the "Power Edge" and Cat "Modern Hex" trade dress as well as corporate and product identity used herein, are trademarks of Caterpillar and may not be used without permission

Cat® GC Control Panel

Image shown might not reflect actual configuration

GCCP 1.2 - Control Panel

GCCP 1.2 is an auto Start Control Module suitable for a wide variety of diesel gen-set applications. Monitoring an extensive number of engine parameters, the modules will display warnings, shutdown and engine status information on the back-lit LCD screen, illuminated LEDs and remote PC.

FEATURES

- 4-line back-lit LCD text display
- Multiple display languages
- Five-key menu navigation
- LCD alarm indication
- Customisable power-up text and images
- Data logging facility
- Internal PLC editor
- Protections disable feature
- Fully configurable via PC using USB & RS485 communication
- Front panel configuration with PIN protection
- Power save mode
- 3-phase generator sensing and protection
- Generator current and power monitoring (kW, kvar, kVA, pf)
  kW and kvar overload and reverse power alarms
- Over current protection
- Unbalanced load protection
- Breaker control via fascia buttons
- Fuel and start outputs configurable when using
  CAN Support for 0 V to 10 V & 4 mA to 20 mA sensors
- 8 configurable digital inputs (3 available for Customer use)
- 8 configurable digital outputs (5 available for Customer use)
- 4 configurable analogue inputs (3 available for Customer Use)
- CAN, MPU and alternator frequency speed sensing in one variant
- Real time clock
- Engine pre-heat and post-heat functions
- Engine run-time scheduler
- Engine idle control for starting &stopping
- Fuel usage monitor and low fuel level alarms
- 3 configurable maintenance alarms

BENEFITS

- Hours counter provides accurate information for monitoring and maintenance periods
- User-friendly set-up and button layout for ease of use
- Multiple parameters are monitored & displayed simultaneously for full visibility
- The module can be configured to suit a wide range of applications for user flexibility
- PLC editor allows user configurable functions to meet user specific application requirements.
- RS485 Communication port can be used for the Remote Monitoring Communication (Compatible with Cat PLG)

SPECIFICATION

DC SUPPLY
CONTINUOUS VOLTAGE RATING
8 V to 35 V Continuous
5 V for upto 1 minute

CRANKING DROPOUTS
Able to survive 0 V for 100 mS, providing supply was at least 10 V before dropout and supply recovers to 5 V. This is achieved without the need for internal batteries.
LEDs and backlight will not be maintained during cranking.

MAXIMUM OPERATING CURRENT
260 mA at 12 V, 150 mA at 24 V

MAXIMUM STANDBY CURRENT
145 mA at 12 V, 85 mA at 24 V

CHARGE FAIL/EXCITATION RANGE
0 V to 35 V

GENERATOR & MAINS (UTILITY) VOLTAGE RANGE
15 V to 415 V AC (Ph to N)
26 V to 719 V AC (Ph to Ph)

FREQUENCY RANGE
3.5 Hz to 75 Hz

MAGNETIC PICKUP VOLTAGE RANGE
+/- 0.5 V to 70 V

FREQUENCY RANGE
10,000 Hz (max)

INPUTS
DIGITAL INPUTS A TO H
Negative switching

ANALOGUE INPUTS A & D
Configurable as:
Negative switching digital input 0 V to 10 V sensor
4 mA to 20 mA sensor Resistive sensor

ANALOGUE INPUTS B & C
Configurable as:
Negative switching digital input Resistive sensor

OUTPUTS
OUTPUT A & B (FUEL & START)
15 A DC at supply voltage

AUXILIARY OUTPUTS C, D, E, F, G & H
2 A DC at supply voltage

DIMENSIONS OVERALL
216 mm x 158 mm x 43 mm
8.5" x 6.2" x 1.5"

PANEL CUT-OUT
184 mm x 137 mm
7.2" x 5.3"

MAXIMUM PANEL THICKNESS
8 mm
0.3"

STORAGE TEMPERATURE RANGE
-40°C to +85°C
-40 °F to +185 °F

OPERATING TEMPERATURE RANGE
-30°C to +70°C
-22 °F to +158 °F

LEHE2017-02 (09-20)

www.Cat.com/electricpower
©2020 Caterpillar All rights reserved. Materials and specifications are subject to change without notice. The International System of Units (SI) is used in this publication. CAT, CATERPILLAR, their respective logos, "Caterpillar Corporate Yellow", the "Power Edge" and Cat "Modern Hex" trade dress as well as corporate and product identity used herein, are trademarks of Caterpillar and may not be used without permission.

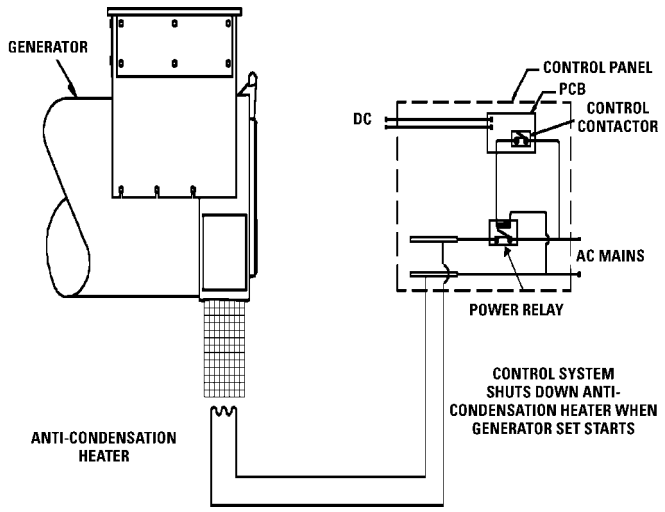

Generator anti-condensation heater AH1H

Appropriate when the generator set is to be sited in a low ambient and/or high humidity environment, the heater maintains the AC generator at a suitable temperature to prevent winding corrosion due to condensation.

The heater itself is powered by a 110/120 volt (VAC 120) or 208/240 volt (VAC 240) AC auxiliary supply protected by a fuse inside the main control panel. When the generator set is not running the heater is automatically connected to the AC supply through a power relay mounted in the control panel. Upon receiving a start signal the AC supply is automatically disconnected by the power relay and automatically reconnected when the start signal is removed and the engine has stopped.

Generator Frame	Nominal Heater Power Consumption (Watts)
LC1500	60
LC3100	100
LC5000	250

Materials and specifications are subject to change without notice.
CAT, CATERPILLAR, their respective logos, “Caterpillar Yellow,” the “Power Edge” trade dress as well as corporate and product identity used herein, are trademarks of Caterpillar and may not be used without permission.

www.Cat-ElectricPower.com

LEHE4017-01 (09/16)

©2016 Caterpillar
All rights reserved.

Attachments

Image shown might not reflect actual configuration

BATTERY CHARGER

The intelligent battery charger has been developed with safety, usability, optimised battery performance and maximum battery lifetimes in mind.

A comprehensive range of input and output protections ensures a continued safe charging environment also enabling the use of the charger as a power supply.

FEATURES

- Intelligent two, three and four stage charging profiles
- Configurable to suit most battery types (12V/24V)
- Adjustable current limit
- Can be used as a battery charger, power supply or both at the same time
- Automatic or Manual boost and storage charge functions to help maintain battery condition
- Digital Microprocessor Technology
- Temperature compensation for battery charging
- Low Output Ripple and superb line regulation
- Three LED Indicators
- AC input Under voltage
- AC input Over voltage
- Battery charger output Over voltage
- Battery charger output Over current
- Optional battery temperature compensation with over temperature protection
- Output short circuit and Inversion polarity with auto recovery
- Configurable charge termination
- UL1236 /UL1564 complaint

Automatic Boost Mode
- Boosts and equalises cell charge improving battery performance and life

Power Save Mode
- Once the battery is fully charged the chargers switch to Eco-Power to save energy

Communication
- Can be integrated into external systems through MODBUS RTU using RS485
- Fully configurable via PC Software

BENEFITS

- Fully flexible to maximise the life of the battery
- Suitable for a wide range of battery types
- Switched mode design
- Minimum 86% efficiency throughout full operating range
- No external intervention for boost mode
- Multiple chargers can be linked together to provide larger current output
- Can be permanently connected to battery and mains (utility) supply. No need to disconnect through high load conditions.

SPECIFICATION

AC SUPPLY
VOLTAGE RANGE 90 V to 305 V (L-N)

FREQUENCY RANGE
48 Hz to 64 Hz (L-N)

DC OUTPUT RATING
10 A DC at 24 V DC

RIPPLE AND NOISE
<1%

EFFICIENCY
>86%

REGULATION LINE
<0.5%

LOAD
2%

TEMPERATURE SENSOR INPUT
PT1000

PROTECTIONS
Short Circuit
DC Over Voltage
DC Over Current
Reverse Polarity
Over Temperature
AC Under & Over Voltage

CHARGE FAILURE RELAY
3 A at 30 V DC volt free relay

DIMENSIONS OVERALL
70 mm x200 mm x 130 mm
2.7" x 7.9" x 5.1"

WEIGHT
0.75 kg

OPERATING TEMPERATURE RANGE
-30 °C to +80 °C
-22 °F to +176 °F

STORAGE TEMPERATURE RANGE
-40 °C to +70 °C
-22 °F to +158 °F

LEHE2022-02 (10-20)

©2020 Caterpillar All rights reserved. Materials and specifications are subject to change without notice. The International System of Units (SI) is used in this publication. CAT, CATERPILLAR, their respective logos, "Caterpillar corporate Yellow", the "Power Edge" and Cat "Modern Hex" trade dress as well as corporate and product identity used herein, are trademarks of Caterpillar and may not be used without permission.

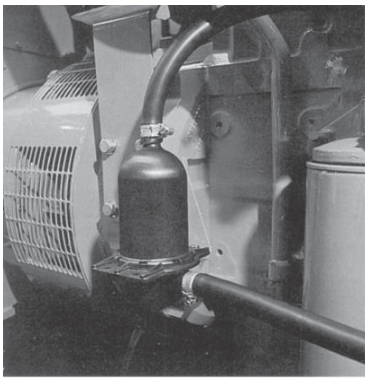

Picture shown may not represent actual package.

Coolant Heater

(WHH / WHHH / WHHA / JWH0089)

Appropriate when the generator set is to be sited in a low ambient environment, the heater maintains the engine coolant at a temperature [typically 38°C (100°F)] which facilitates rapid starting and load acceptance. The heater assembly uses UL compliant components (to UL1030) and has CSA certification which is to both CSA and UL Standards.

The heater itself is powered either by a 110/120 volt (VAC 120) for 60 Hz or 240V (VAC 240) for 50 Hz AC auxiliary supply protected by a safeguard breaker inside the main control panel. A thermostatic controller is included to regulate the output temperature to within safe limits. When the generator set is not running the heater is automatically connected to the AC supply through a power relay mounted in the control panel.

Upon receiving a start signal the AC supply is automatically disconnected by the power relay and automatically reconnected when the start signal is removed and the engine has stopped.

Features

- Molded from Polyphenylene Sulphide
- Rust free, corrosion resistant with exceptional tensile strength
- Vibration and shock tested to extreme limits to ensure durability
- Compatible with all coolant additives
- Incoloy element for longer service life

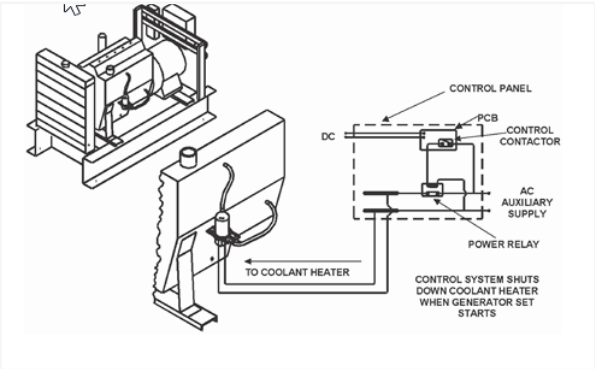

VAC 120

Diesel Generator Set Engine Models	Nominal Coolant Heater Power Consumption (Watts)
C2.2, C4.4*, C7.1*	1000
C3.3, C4.4	1500
C7.1	1800

Gas Generator Set Models	Nominal Coolant Heater Power Consumption (Watts)
DG30-2, DG50-2, DG60-2, DG80-2	1000
DG100-2, DG125-2, DG150-2	1800

VAC 240

Diesel Generator Set Engine Models	Feature Code
C3.3, C4.4, C7.1	1500
C13, C15, C18	3000

* For North American Region

©2020 Caterpillar
All rights reserved.
Materials and specifications are subject to change without notice.
The International System of Units (SI) is used in this publication.
CAT, CATERPILLAR, LET'S DO THE WORK, their respective logos, "Caterpillar Corporate Yellow" the "Power Edge" and Cat "Modern Hex" trade dress as well as corporate and product identity used herein, are trademarks of Caterpillar and may not be used without permission.

Cat GC Circuit Breakers

Manually Operated Circuit Breakers for D40 GC – D200 GC Diesel Generator Sets

Current (A)	Frame	Number of poles	Interupting Ratings (kA ms)			Trip Unit	(#)Lugs Size	Aux options
			240V	480V	600V			
60	H	3	65	35	18	LSI	(1) 14-2/0 AWG	Form C (1NC & 1NO) Shunt Trip (12V)
100	H	3	65	35	18			
150	H	3	65	35	18			
250	J	3	65	35	18		(1) 1/0-300 kcmil	
400	T5N	3	65	35	18		Bus Bar	1 Form C + 1 Bell Alarm Shunt Trip (12V)
600	T6N	3	65	35	20			
800	T6N	3	65	35	20			

(#) No of Cables per Lug

Diesel D40 GC - D60 GC

First Breaker	Second Breaker
Circuit Breaker (A)	Circuit Breaker (A)
60	60
100	100
150	150
250	

Diesel D80 GC - D200 GC

First Breaker	Second Breaker
Circuit Breaker (A)	Circuit Breaker (A)
100	60
150	100
250	150
400	250
600	
800	

Available Breaker Configurations	
First Breaker	Second Breaker
H	–
H	H
H	J
J	–
J	J
J	H

Available Breaker Configurations		
First Breaker	Second Breaker	
H	H	J
J	H	J
T5	H	J
T6	H	J

H-Frame Circuit Breakers

Electronic Trip Unit Long Time / Short Time Trip Curve

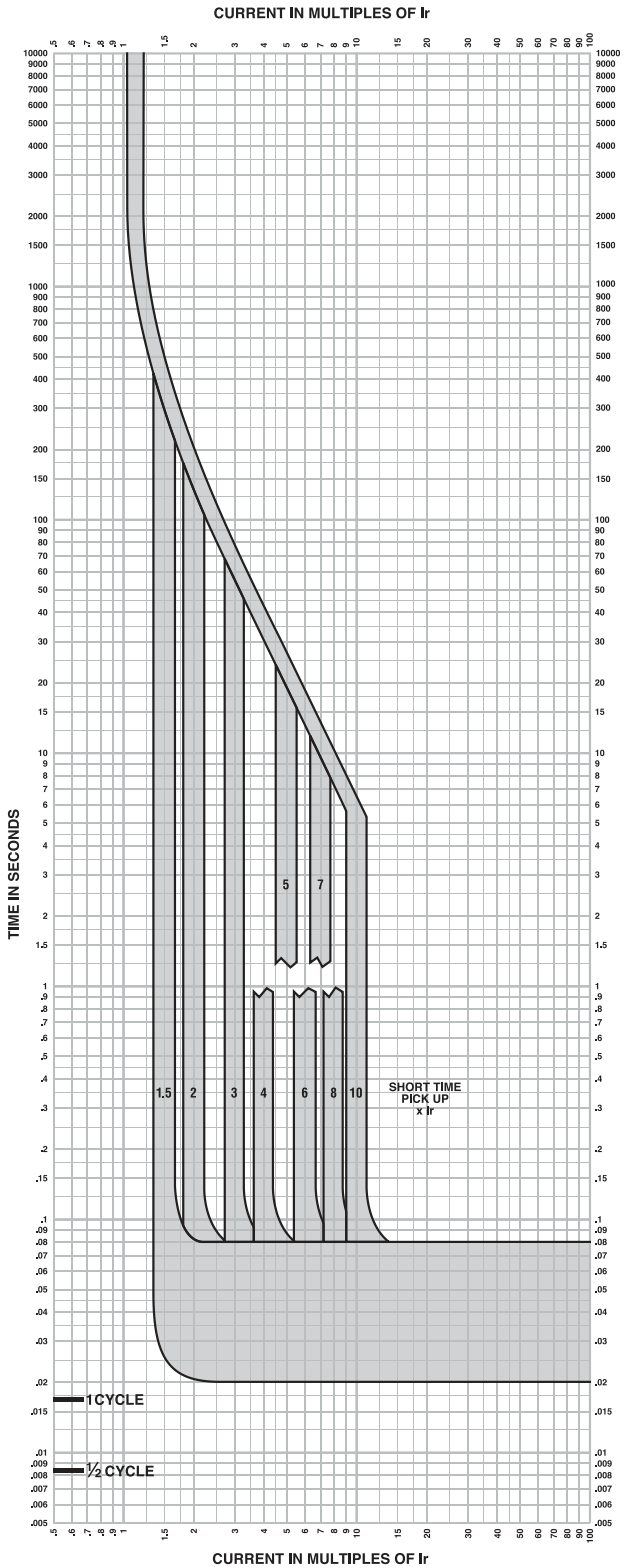

Long Time/Short Time Trip Curve
60A, 100A, 150A H-Frame

The time-current curve information is to be used for application and coordination purposes only.

Notes:

1. There is a thermal-imaging effect that can act to shorten the long-time delay. The thermal imaging effect comes into play if a current above the long-time delay pickup value exists for a time and then is cleared by the tripping of a downstream device or the circuit breaker itself. A subsequent overload will cause the circuit breaker to trip in a shorter time than normal. The amount of time delay reduction is inverse to the amount of time that has elapsed since the previous overload. Approximately 20 minutes is required between overloads to completely reset thermal-imaging.
2. Total clearing times shown include the response times of the trip unit, the circuit breaker opening, and the extinction of the current.

Curves apply from -35°C to +70°C (-31°F to +158°F) ambient temperature.

H-Frame Circuit Breakers

Electronic Trip Unit Instantaneous Trip Curve

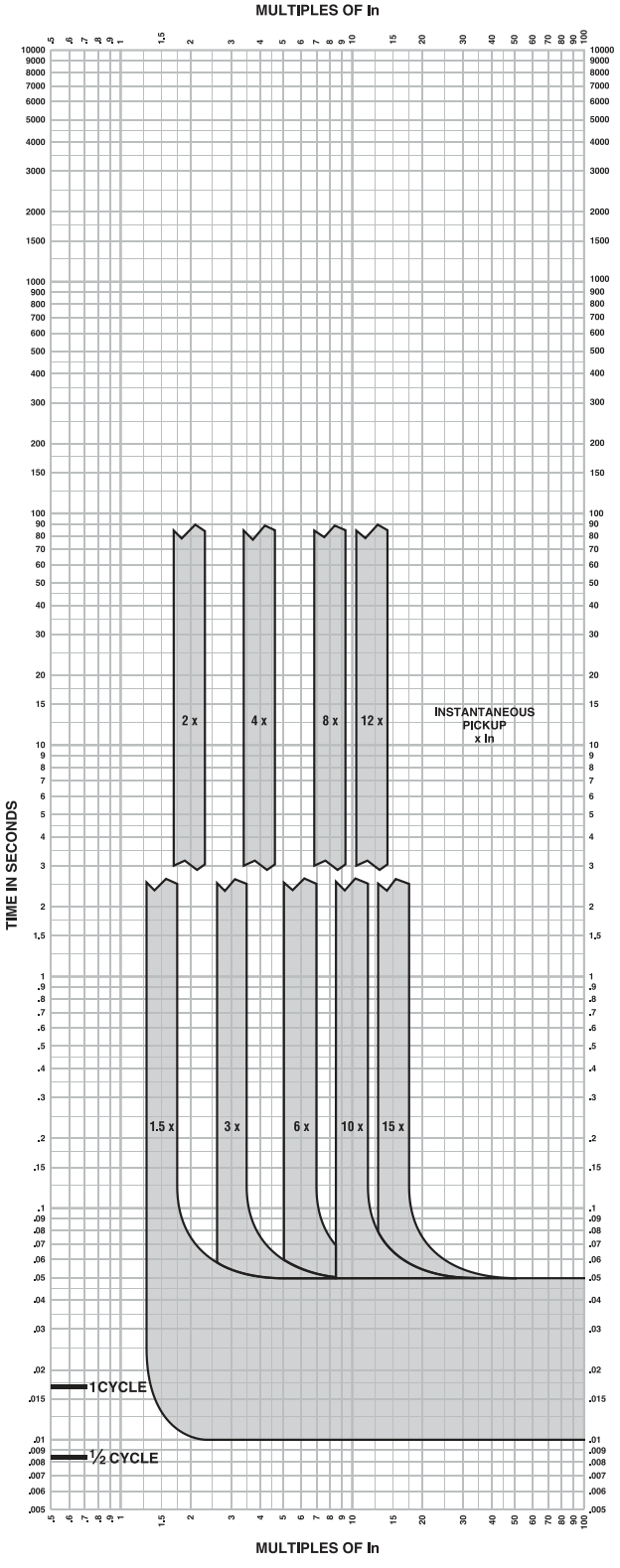

Instantaneous Trip Curve
60A, 100A, 150A H-Frame

The time-current curve information is to be used for application and coordination purposes only.

Notes:

1. There is a thermal-imaging effect that can act to shorten the long-time delay. The thermal imaging effect comes into play if a current above the long-time delay pickup value exists for a time and then is cleared by the tripping of a downstream device or the circuit breaker itself. A subsequent overload will cause the circuit breaker to trip in a shorter time than normal. The amount of time delay reduction is inverse to the amount of time that has elapsed since the previous overload. Approximately 20 minutes is required between overloads to completely reset thermal-imaging.
2. Total clearing times shown include the response times of the trip unit, the circuit breaker opening, and the extinction of the current.
3. In = Maximum dial setting of Ir.
   60A H-Frame: In = 60A = Max Ir setting
   100A H-Frame: In = 100A = Max Ir setting
   150A H-Frame: In = 150A = Max Ir setting

Curves apply from -35°C to +70°C (-31°F to +158°F) ambient temperature.

J-Frame Circuit Breakers

Electronic Trip Unit Long Time / Short Time Trip Curve

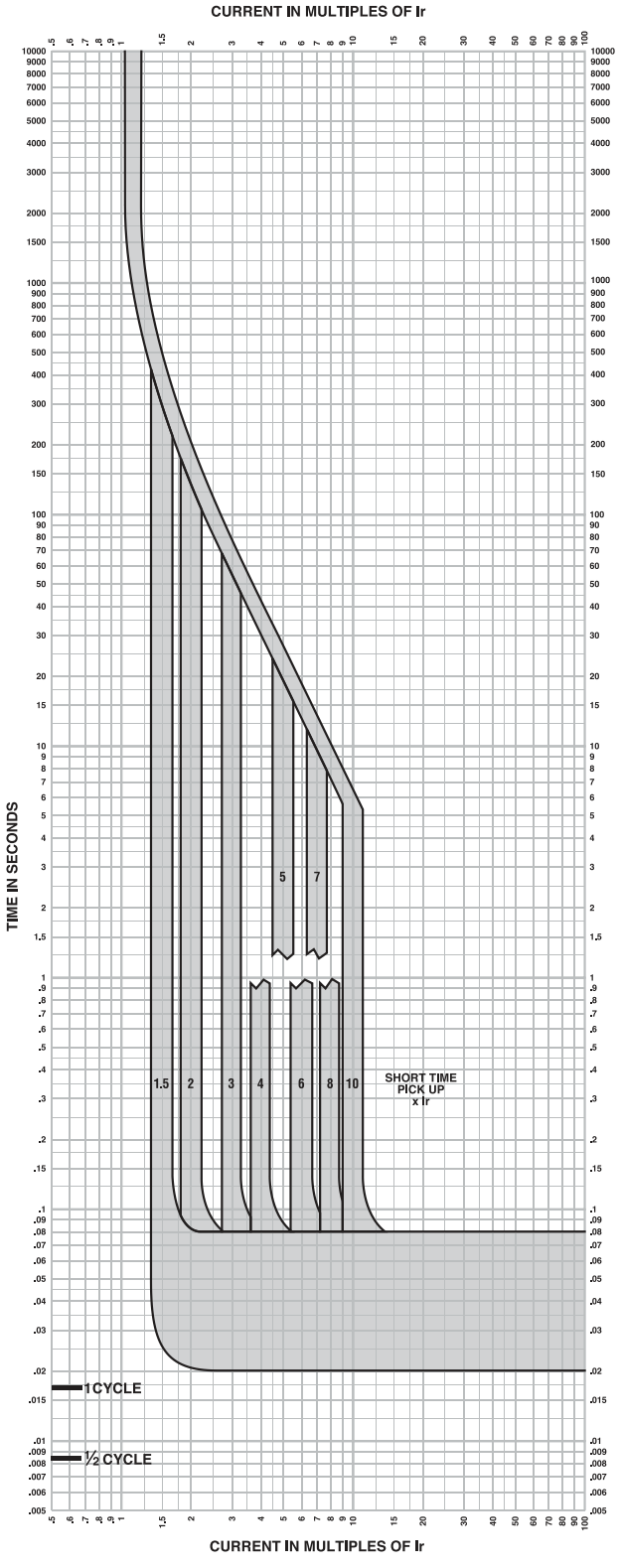

Long Time/Short Time Trip Curve
250A J-Frame

The time-current curve information is to be used for application and coordination purposes only.

Notes:

1. There is a thermal-imaging effect that can act to shorten the long-time delay. The thermal imaging effect comes into play if a current above the long-time delay pickup value exists for a time and then is cleared by the tripping of a downstream device or the circuit breaker itself. A subsequent overload will cause the circuit breaker to trip in a shorter time than normal. The amount of time delay reduction is inverse to the amount of time that has elapsed since the previous overload. Approximately 20 minutes is required between overloads to completely reset thermal-imaging.
2. Total clearing times shown include the response times of the trip unit, the circuit breaker opening, and the extinction of the current.

Curves apply from -35°C to +70°C (-31°F to +158°F) ambient temperature.

J-Frame Circuit Breakers

Electronic Trip Unit Instantaneous Trip Curve

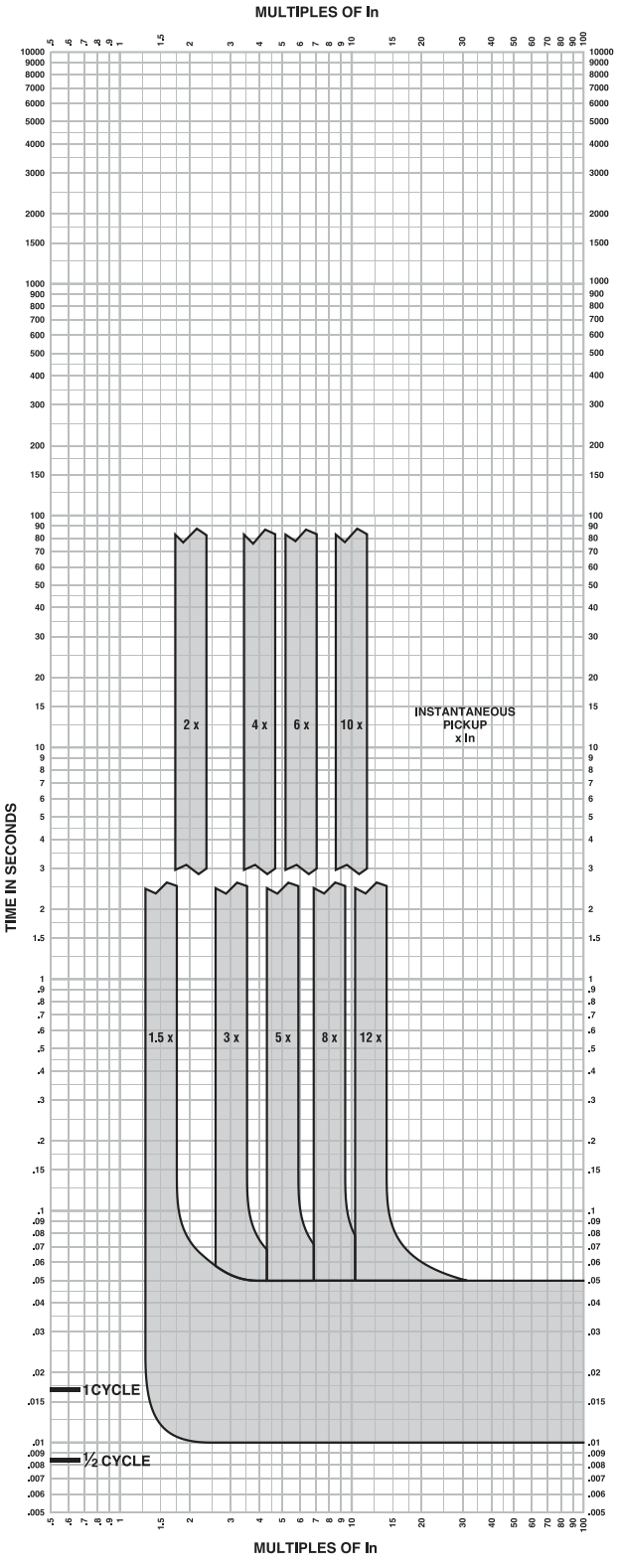

Instantaneous Trip Curve
250A J-Frame

The time-current curve information is to be used for application and coordination purposes only.

Notes:

1. There is a thermal-imaging effect that can act to shorten the long-time delay. The thermal imaging effect comes into play if a current above the long-time delay pickup value exists for a time and then is cleared by the tripping of a downstream device or the circuit breaker itself. A subsequent overload will cause the circuit breaker to trip in a shorter time than normal. The amount of time delay reduction is inverse to the amount of time that has elapsed since the previous overload. Approximately 20 minutes is required between overloads to completely reset thermal-imaging.
2. Total clearing times shown include the response times of the trip unit, the circuit breaker opening, and the extinction of the current.
3. In = Maximum dial setting of Ir.
   250A J-Frame: In = 250A = Max Ir setting

Curves apply from -35°C to +70°C (-31°F to +158°F) ambient temperature.

Trip curves for Circuit-breakers with electronic trip units

T4 250/320 - T5 400/630 - T6 630/800/1000 PR221DS
L-S Functions

Note: For T4 In = 320 A, T5 In = 630 A and T6 In = 1000 A I_2max = 9.5 x In

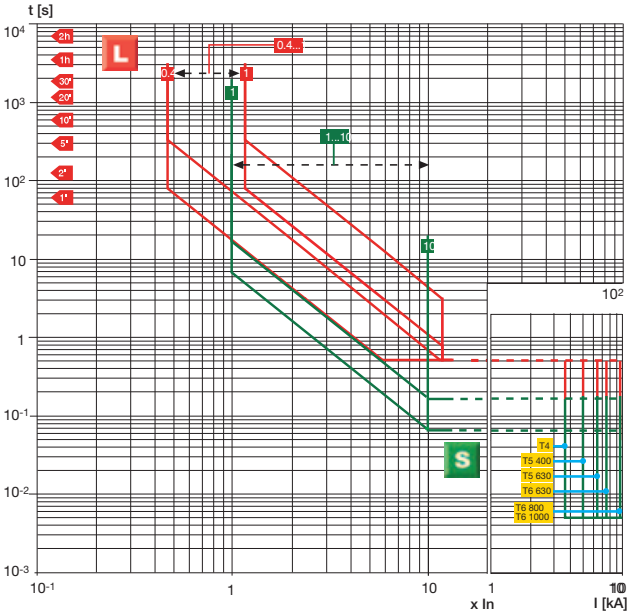

T4 250/320 - T5 400/630 - T6 630/800/1000 PR222DS - PR222DS/PD - PR223DS
L-S-I Functions

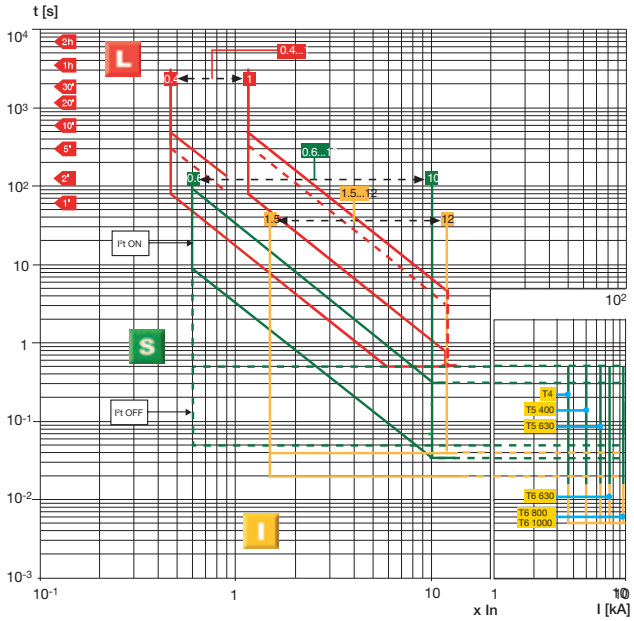

Note: The dotted curve of function L corresponds to the maximum delay (t1) which can be set at 6 x I_1, in the case where 320 A CTs are used for T4 and 630 A for T5. For all the CT sizes t_1 = 18s except with 320 A CT (T4), 630 A CT (T5) and 1000 A CT (T6) where t_1 = 10.5s. For T4 In = 320 A, T5 In = 630 A and T6 In = 1000 A I_2max = 9.5 x In, I_3max = 9.5 x In. For T6 In = 800 A I_3max = 10.5 x In. For PR223DS the L protection function can be set to I_1 = 0.18...1 x In.

T4 250/320 - T5 400/630 - T6 630/800/1000 PR222DS - PR222DS/PD - PR223DS
G Function

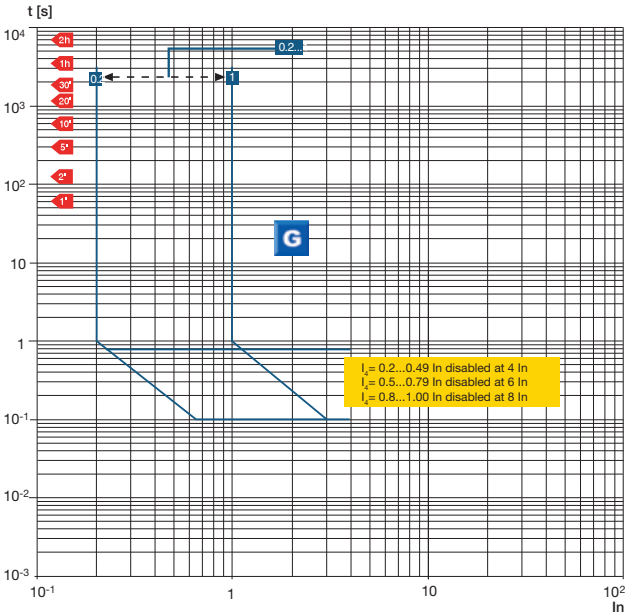

T7 800/1000/1250/1600 – PR231/P L-I
Functions

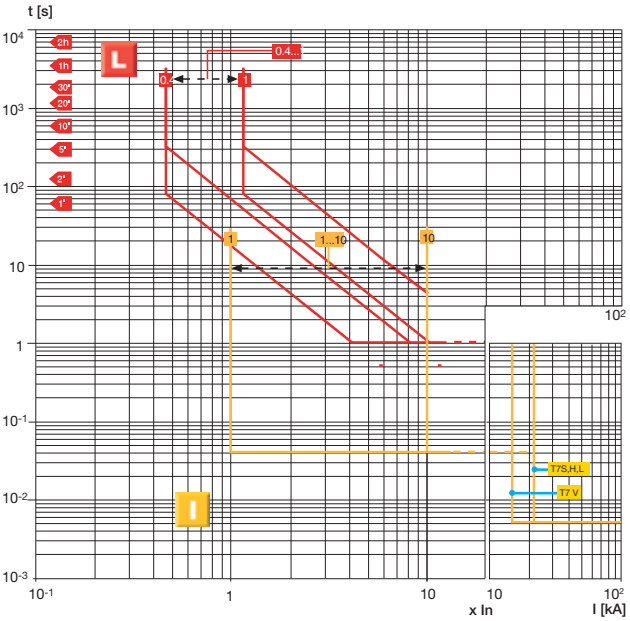

www.cat.com/electricpower
©2020 Caterpillar All rights reserved.

Materials and specifications are subject to change without notice.
CAT, CATERPILLAR, their respective logos, "Caterpillar Yellow",
the "Power Edge" trade dress as well as corporate and product identity used herein, are trademarks of Caterpillar
and may not be used without permission.

LEHE20043-00 (10-20)

Note : The Information on this Document comes from a Third Party Supplier and is not a Caterpillar Material.

Cat® GC Control Panel Options

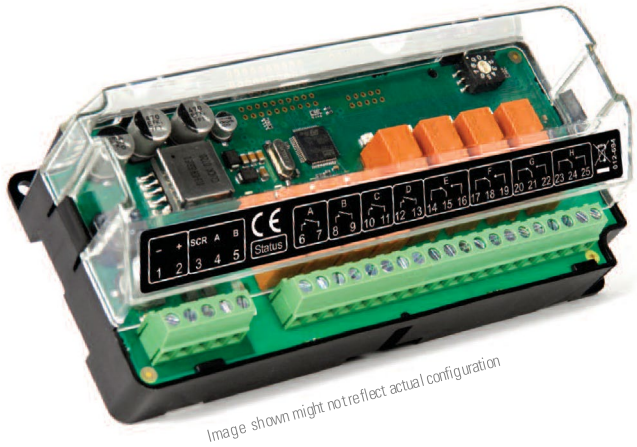

Image shown might not reflect actual configuration

OUTPUT EXPANSION MODULE

Output relay expansion module for use with compatible control modules. The Output Expansion module has been designed to extend a host module's output capabilities.

A maximum of 10 Output Expansion modules can be connected to an individual module at any one time. All outputs are configurable via the host controller.

The module will work up to 1 KM (0.6miles) from the host control module

FEATURES

- Power On/Link Lost LED ID SWITCH
- 10 expansion modules can be connected to 1 host controller at a time
- 8 configurable relay contacts with LED indicators:
- 4 Normally Open (N/O)
- 4 Change Over (C/O)
- Terminal strip connection for quick and easy set-up

ENVIRONMENTAL TESTING STANDARDS

ELECTRO-MAGNETIC COMPATIBILITY
BS EN 61000-6-2
EMC Generic Immunity Standard for the Industrial Environment
BS EN 61000-6-4
EMC Generic Emission Standard for the Industrial Environment

ELECTRICAL SAFETY
BS EN 60950
Safety of Information Technology Equipment, including Electrical Business Equipment

TEMPERATURE
BS EN 60068-2-1
Ab/Ae Cold Test -30 °C BS EN 60068-2-2
Bb/Be Dry Heat+70°C

VIBRATION
BS EN 60068-2-6
Ten sweeps in each of three major axes
5 Hz to 8 Hz @ +/-7.5 mm, 8 Hz to 500 Hz @ 2 gn

SHOCK
BS EN 60068-2-27
Three shocks in each of three major axes 15 gn in 11 Ms

HUMIDITY
BS EN 60068-2-30
Db Damp Heat Cyclic 20/55 °C @ 95% RH 48 Hours
BS EN 60068-2-78
Cab Damp Heat Static 40 °C @ 93% RH 48 Hours

SPECIFICATION

CONTINUOUS VOLTAGE RATING
8 V to 35 V Continuous

CRANKING DROPOUTS
Able to survive 0 V for 50 mS, providing supply was at least 10 V before dropout and supply recovers to 5 V. This is achieved without the need for internal batteries. LEDs and backlight will not be maintained during cranking.

MAXIMUM OPERATING CURRENT
325 mA at 12 V, 152 mA at 24 V

MAXIMUM STANDBY CURRENT
70 mA at 12 V, 32 mA at 24 V

AUXILIARY RELAY CONTACTS
2 Amp DC rated voltage free

DIMENSIONS OVERALL
165 mm x 76 mm x 49 mm
6.5" x 3" x 1.9"

LEHE2020-00 (08-19)
www.Cat.com/electricpower
©2019 Caterpillar All rights reserved. Materials and specifications are subject to change without notice. The International System of Units (SI) is used in this publication. CAT, CATERPILLAR, their respective logos, "Caterpillar Yellow", the "Power Edge" and Cat "Modern Hex" trade dress as well as corporate and product identity used herein, are trademarks of Caterpillar and may not be used without permission.

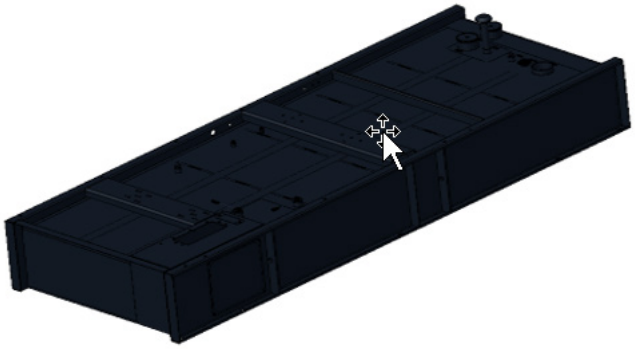

Image show might not reflect actual product

Integral Fuel Tanks

D40 GC – D200 GC

Features

- UL Listed for United States (UL 142) and Canada (CAN/ULC S601)
- Facilitates compliance with NFPA 30 code, NFPA 37 and 110 standards and CSA C282 code
- Dual wall
- Low fuel level warning standard, customer configurable warning or shutdown
- Primary tank leak detection switch in containment basin
- Tank design provides capacity for thermal expansion of fuel
- Fuel supply dip tube is positioned so as not to pick up fuel sediment
- Fuel return and supply dip tube is separated by an internal baffle to prevent immediate re-supply of heated return fuel
- Pressure washed with an iron phosphate solution
- Interior tank surfaces coated with a solvent-based thin-film rust preventative
- Heavy gauge steel gussets with internal lifting rings
- Primary and secondary tanks are leak tested at 20.7 kPa (3 psi) minimum
- Compatible with open packages and enclosures
- Gloss black polyester alkyd enamel exterior paint
- Welded steel containment basin (minimum of 110% of primary tank capacity)
- Direct reading fuel gauge with variable electrical

Integral

- Integral diesel fuel tank is incorporated into the generator set base frame
- Robust base design includes linear vibration isolators between tank base and engine generator.

Options

- Audio/visual fuel level alarm panel
- 5 gal (18.9L) spill containment
- Fuel tank fill pipe and lockable cap
- Overfill prevention Valve

Integral Fuel Tank Base Useable Capacities with Fuel Tank Dimensions & Weights

The heights listed above do not include lumber used during manufacturing and shipping

A. Open Set & Sound Attenuated Enclosure

Standby eKW	Feature Code	Total Capacity		Useable Capacity	
		Litre	Gallon	Litre	Gallon
40-60	FTDW044	523	138.2	466	123.1
80-100	FTDW043	769	203.1	690	182.3
125-200	FTDW045	1511	399.2	1355	357.9

Standby eKW	Feature Code	Tank Only								Overall Package Height with Tank			
		Dry Weight		Height 'H'		Length 'L'		Width		Open		Enclosure	
		kg	lb	mm	in	mm	in	mm	in	mm	in	mm	in
40-60	FTDW044	387.5	853.2	365	14.4	2708	106.6	1100	43.3	1384	54.5	1496	58.9
80-100	FTDW043	462.5	1019.6	440	17.3	3035	119.5	1100	43.3	1583	62.3	1673	65.9
125-200	FTDW045	736.1	1622.8	555	21.9	3670	144.5	1300	51.2	1847	72.7	1925	75.8

Time (Hours)

Tank Design	Feature Code	Standby Ratings (kVA)						
		ekW	100%		75%		50%	
			Hrs	L/hr	Hrs	L/hr	Hrs	L/hr
Integral Tank	FTDW044	40	33.5	13.9	43.1	10.8	57.5	8.1
		50	27.7	16.8	36.4	12.8	50.1	9.3
		60	24.0	19.4	27.7	16.8	35.6	13.1
	FTDW043	80	29.1	23.7	36.3	19.0	49.6	13.9
		100	24.0	28.8	29.7	23.2	40.1	17.2
	FTDW045	125	35.8	37.8	44.7	30.3	61.9	21.9
		150	31.5	43.0	38.8	34.9	54.2	25.0
		175	26.5	51.2	32.3	41.9	47.4	28.6
		200	24.0	56.4	29.6	45.8	41.6	32.6

Tanks include RH stub-up area directly below the circuit breaker or power terminal strips.

Fuel tanks and applicable options facilitate compliance with the following United States NFPA Code and Standards:

NFPA 30: Flammable and Combustible Liquids Code

NFPA 37: Standard for the Installation and Use of Stationary Combustion Engines and Gas Turbines

NFPA 110: Standard for Emergency and Standby Power Systems

Fuel tanks and applicable options facilitate compliance with the following Canadian Standard and Code:

CSA C282 – Emergency Electrical Power Supply for Buildings

CSA B139-09 – Installation Code for Oil-Burning Equipment

www.cat.com/electricpower
©2020 Caterpillar
All rights reserved.

Materials and specifications are subject to change without notice.
The International System of Units (SI) is used in this publication.

CAT, CATERPILLAR, LET'S DO THE WORK, their respective logos, "Caterpillar Corporate Yellow, the "Power Edge" and Cat "Modern Hex" trade dress as well as corporate and product identity used herein, are trademarks of Caterpillar and may not be used without permission.

LET'S DO THE WORK.™

LEHE2681-00 (09/20)

Cat® GC Enclosures

Image shown might not reflect actual configuration

D40 GC - D200 GC Sound Attenuated Level 2 Enclosures

60 Hz:40 ekW - 200 ekW

Features

Robust/Highly Corrosion Resistant Construction

- Factory installed on skid base or 24hr Integral fuel tank
- Caterpillar white paint
- Environmentally friendly, polyester powder baked paint
- 18 gauge steel minimum.
- Zinc plated fasteners
- Stainless steel hinges
- Internally mounted exhaust silencing system
- Designed and tested to comply with UL 2200 Listed generator set package
- Comply with ASCE /SEI 7 for Wind Loads up to 100mph
- Optional seismic certification offered
- Compression door latches providing solid door seal

Excellent Access

- Large cable entry area for installation ease
- Accommodates side mounted single or multiple breakers
- Single door on left hand side
- Dual doors on right hand side
- Doors vertically hinged allow 180° opening rotation
- Doors capable of lift off at 90° opening rotation
- For non-routine service access are removeable panels
- Lube oil drain valve standard with coolant drain and valve piped to the exterior of the enclosure base
- Radiator fill cover

Security and Safety

- Lockable (keyed or padlock) doors which give full access to control panel and breaker
- Cooling fan and battery charging alternator fully guarded
- Fuel fill, oil fill and battery can only be reached via lockable access
- Optional externally mounted emergency stop button
- Designed for spreader bar lifting to ensure safety
- Stub-up area is rodent proof

Options

- Skid base compatible
- UL Listed integral fuel tank with 24 hour running time capacity
- DC lighting package

Enclosure Package Operating Characteristics

A. Sound Attenuated- Level 2

Model	Hz	ekW	SB	Sound Pressure Levels dBA 7m (23ft)	Air Flow Rate		Ambient Capability* @100% Load	
				100% Load	m^3/s	cfm	°C	°F
D40 GC	60	40	SB	67.7	1.5	3178.3	60	140
D50 GC	60	50	SB	68.6	1.5	3178.3	54	129
D60 GC	60	60	SB	69.6	1.5	3178.3	48	118
D80 GC	60	80	SB	74.9	3.5	7416.1	60	140
D100 GC	60	100	SB	76.4	3.5	7416.1	52	126
D125 GC	60	125	SB	74.8	3.4	7204.2	61	142
D150 GC	60	150	SB	75.4	3.4	7204.2	54	129
D175 GC	60	175	SB	79.3	4.1	8687.4	49	120
D200 GC	60	200	SB	79.5	4.1	8687.4	44	111

*TBD - To be determined - Data will be released soon

*Cooling system performance at sea level. Consult your Cat® dealer for site specific ambient and altitude capabilities.

Note: Sound level measurements are subject to instrumentation, installation and manufacturing variability, as well as ambient site conditions.

B. Component Weights to Calculate Package Weight

Standby ekW	Wide Skid Base		Sound Attentuted Enclosure (Steel)	
	kg	lb	kg	lb
40-60	92.6	204.1	178.8	394.2
80-100	96.2	212.1	189.1	416.9
125-200	115.9	255.5	274.4	604.9

C. Weights & Dimensions

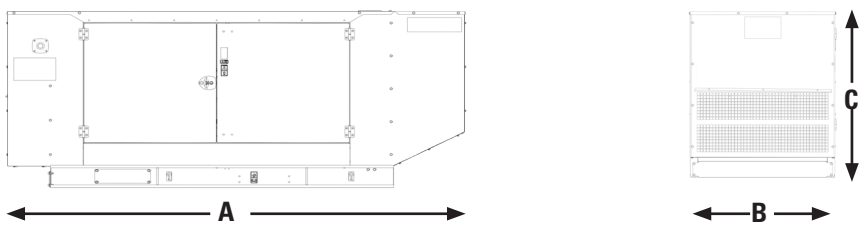

Sound Attenuated Enclosure on Skid Base

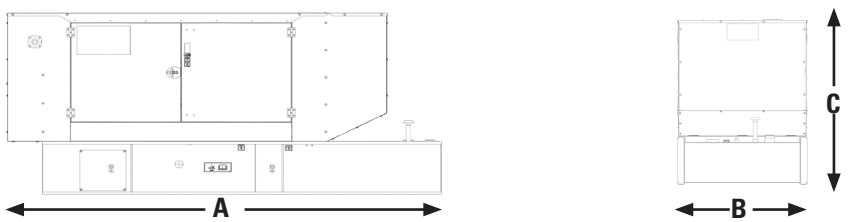

Sound Attenuated Enclosure on a UL Listed Integral Fuel Tank Base

*Note: For reference only – do not use for installation design. Please contact your local dealer for exact weights and dimensions

Cat® GC Enclosures

Enclosure Type	Standby ratings	Length, L		Width, W		Height, H		Package Weights	
	ekW	mm	in	mm	in	mm	in	kg	lb
Open Set on Skid (wide Base)	40	1976	77.2	1099.8	43.3	1219.2	48.0	837.7	1847
	50	1976	77.2	1099.8	43.3	1219.2	48.0	931.6	2054
	60	1976	77.2	1099.8	43.3	1219.2	48.0	905.8	1997
	80	2098	82.6	1099.8	43.3	1343.6	52.9	950.2	2095
	100	2098	82.6	1099.8	43.3	1343.6	52.9	1007.8	2222
	125	2634	103.7	1300.4	51.2	1402	55.2	1405.6	3099
	150	2634	103.7	1300.4	51.2	1402	55.2	1561.7	3443
	175	2634	103.7	1300.4	51.2	1490.9	58.7	1696.8	3741
	200	2634	103.7	1300.4	51.2	1490.9	58.7	1776.7	3917
Open Set on a UL Listed Integral Fuel Tank Base	40	2707.6	106.6	1099.8	43.3	1384.3	54.5	1536.3	3387
	50	2707.6	106.6	1099.8	43.3	1384.3	54.5	1630.2	3594
	60	2707.6	106.6	1099.8	43.3	1384.3	54.5	1604.3	3537
	80	3035.3	119.5	1099.8	43.3	1582.4	62.3	1914.1	4220
	100	3035.3	119.5	1099.8	43.3	1582.4	62.3	1972.2	4348
	125	3670.3	144.5	1300.4	51.2	1757.6	69.2	3207.8	7072
	150	3670.3	144.5	1300.4	51.2	1757.6	69.2	3363.3	7415
	175	3670.3	144.5	1300.4	51.2	1846.6	72.7	3498.5	7713
	200	3670.3	144.5	1300.4	51.2	1846.6	72.7	3578.4	7889
Sound Attenuated Enclosure on Skid Base	40	2456.1	96.1	1120.1	44.1	1330.9	52.4	1016.5	2241
	50	2456.1	96.1	1120.1	44.1	1330.9	52.4	1110.4	2448
	60	2456.1	96.1	1120.1	44.1	1330.9	52.4	1084.5	2391
	80	2768.6	109.0	1120.1	44.1	1432.5	56.4	1139.4	2512
	100	2768.6	109.0	1120.1	44.1	1432.5	56.4	1197.0	2639
	125	2633.9	103.7	1318.2	51.9	1569.7	61.8	1680.1	3704
	150	2633.9	103.7	1318.2	51.9	1569.7	61.8	1836.1	4048
	175	2633.9	103.7	1318.2	51.9	1569.7	61.8	1971.3	4346
	200	2633.9	103.7	1318.2	51.9	1569.7	61.8	2051.1	4522
Sound Attenuated Enclosure on a UL Listed Integral Fuel Tank Base	40	2931.1	115.4	1120.1	44.1	1496	58.9	1715.0	3781
	50	2931.1	115.4	1120.1	44.1	1496	58.9	1808.9	3988
	60	2931.1	115.4	1120.1	44.1	1496	58.9	1783.1	3931
	80	3256.2	128.2	1120.1	44.1	1673.8	65.9	2103.3	4637
	100	3256.2	128.2	1120.1	44.1	1673.8	65.9	2161.4	4765
	125	4008.1	157.8	1318.2	51.9	1925.3	75.8	3481.8	7676
	150	4008.1	157.8	1318.2	51.9	1925.3	75.8	3637.8	8020
	175	4008.1	157.8	1318.2	51.9	1925.3	75.8	3773.0	8318
	200	4008.1	157.8	1318.2	51.9	1925.3	75.8	3852.8	8494

*Note: Weights include genset, enclosure (where applicable), tank and fuel (where applicable)

LET'S DO THE WORK.™

www.Cat.com/electricpower
© 2021 Caterpillar.
All rights reserved.
Materials and specifications are subject to change without notice.The International System of Units (SI) is used in this publication.
CAT, CATERPILLAR, LET'S DO THE WORK, their respective logos, "Caterpillar Corporate Yellow", the "Power Edge" and Cat "Modern Hex" trade dress as well as corporate and product identity used herein, are trademarks of Caterpillar and may not be used without permission

LEHE20120-02 (03/21)

THIS DIAGRAM IS FOR GC GENSET MODELS (60kW to 200kW)

FOR USE WITH : C4.4 & C7.1 ENGINES

GCCP 1.2 CONTROLLER

SIGNAL NAMES

CIRCUIT_ID	COLOR	DESCRIPTION
10	WH	NEGATIVE_RUN/STOP
101	RD	UNSWITCHED_BTRY_(+)
105	WH	ECM_KEY_SW_(FUSED_25A)
108	WH	BTRY_(+)_(FUSED_10A)
10	RD	AVR_X2_TO_GENERATOR_T12
10A	WH	POSITIVE_RUN_STOP
11	WH	AUX_CONTACT_COMMON
12	WH	AUX_CONTACT_NC
123	WH	PLG_BTRY_(+)_(FUSED_5A)
14	WH	AUX_CONTACT_NO
14	WH	PMG_A_PHASE_TO_AVR_X2
148	WH	ELR_BTRY_(+)_(FUSED_2A)
15	WH	PMG_B_PHASE_TO_AVR_X1
16	WH	PMG_C_PHASE_TO_AVR_Z2
17A	WH	ENCLOSURE_ESTOP_#11_TO_E-C1_#1
17C	WH	ESTOP_LINK
200	GN-YL	MAIN_CHASSIS_GROUND
208	WH	BTRY_(-)
21	WH	AUX_CONTACT_COMMON
22	WH	AUX_CONTACT_NC
229	WH	GND_FOR_ANALOG_INPUTS
24	WH	AUX_CONTACT_NO
344	WH	EMER_STOP_SW_#22_TO_A-C10_#2
345	WH	A-C10_#1_TO_EMER_STOP_A_TERMINAL
346	WH	EMER_STOP_SW_#12_TO_#21
347	WH	EMER_STOP_SW_#11_TO_CONTROLLER_#3
4	WH	ECM_#18_BTRY_(-)_TO_ECR_#86
5	WH	ENCLOSURE_ESTOP_#22_TO_E-C1_#2
5+	RD	GENERATOR_EXCITER_(+)
6-	BK	GENERATOR_EXCITER_(-)
879	WH	REMOTE_START_CONTROLLER_#42
9	RD	AVR_X1_TO_GENERATOR_T7
95	BK	AUX_CONTACT_COMMON
951	WH	PLG_MODBUS_A_TO_CONTROLLER_#52
951	CU	BATT_CHRG_DSENET_SCR_TO_CONTROLLER_#28
952	BK	PLG_MODBUS_B_TO_CONTROLLER_#51
952	GN	BATT_CHRG_DSENET_B_TO_CONTROLLER_#26
953	CU	PLG_MODBUS_SCR_TO_CONTROLLER_#50
953	YL	BATT_CHRG_DSENET_A_TO_CONTROLLER_#27
954	WH	ANNUNCIATOR_MODBUS_A
955	BK	ANNUNCIATOR_MODBUS_B
956	CU	ANNUNCIATOR_MODBUS_SCR
96	BK	AUX_CONTACT_NC
98	BK	AUX_CONTACT_NO
A309	WH	AHR_#A1_TO_CONTROLLER_#8
A666	WH	ELR_#14_TO_ENC_LIGHT_EL-C1_#1
AC101	WH	120VAC_(FUSED_20A)_TO_GFCI_#LINE
AC102	WH	120VAC_(FUSED_10A)_TO_BATT_CHRG_#L
AC199	WH	SHORE_POWER_NEUTRAL
AC719	WH	120VAC_(FUSED_6A)_TO_AHR_#12
C1	WH	SHUNT_TRIP
C2	WH	SHUNT_TRIP
D_POS	WH	CHARGER_ALTERNATOR_EXCITATION
E486	WH	SENSING_V_-_PHASE_A
E487	WH	SENSING_V_-_PHASE_B
E488	WH	SENSING_V_-_PHASE_C
E494	WH	CT_V_-_PHASE_A
E495	WH	CT_V_-_PHASE_B
E496	WH	CT_V_-_PHASE_C
E498	WH	CT_RTN_COMMON
F409	WH	SENSING_V_NEUTRAL
F434	WH	GEN_PHASE_A
F435	WH	GEN_PHASE_B
F436	WH	GEN_PHASE_C
F5	WH	AVR_#F-
F6	WH	AVR+#F+
L1	BK	GENERATOR_L1_PHASE
L2	BK	GENERATOR_L2_PHASE
L3	BK	GENERATOR_L3_PHASE
LINK	WH	ENCLOSURE_ESTOP_LINK
N	BK	GENERATOR_NEUTRAL
N756	WH	ALM_HORN_(+)
P733	WH	ANLG_INP_1_(+)
R958	WH	DISCRETE_OUT._9
R959	WH	DISCRETE_OUT._10
U	RD	AVR_SENSING
V	RD	AVR_SENSING
W	RD	AVR_SENSING
WIFR	WH	WATER_IN_FUEL_RETURN
WIFS	WH	WATER_IN_FUEL_SWITCH
X861	WH	ECR_#87_STARTER_MAG_SW
Y797	WH	ENG_J1939_DATALINK_+
Y798	BK	ENG_J1939_DATALINK_-
Y799	CU	ENG_J1939_DATALINK_SHLD
Y983	WH	LOW_COOLANT_LEVEL_TO_CNTRL_#43
Y984	WH	FUEL_LEVEL_TO_CNTRL_#44
Y985	WH	ENCLOSURE_LIGHT_SW_TO_CNTRL_#46
YGN	GN/YL	GENERATOR_GND

WIRE NAME DEFINITION

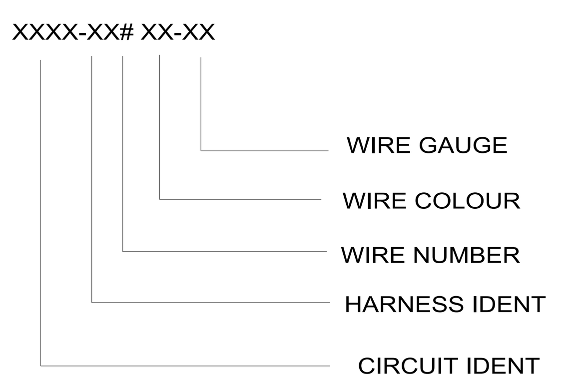

COLOUR ABBREVIATIONS

ABBREVIATION	DESCRIPTION
RD	RED
WH	WHITE
OR	ORANGE
YL	YELLOW
PK	PINK
BK	BLACK
GY	GREY
PU	PURPLE
BR	BROWN
GN	GREEN
BU	BLUE
CU	COPPER
GN-YL	GREEN-YELLOW

ABBREVIATIONS

ABBREVIATIONS	DESCRIPTION
AC	ALTERNATING CURRENT
AHR	ALTERNATOR HEATER RELAY
AVR	AUTOMATIC VOLTAGE REGULATOR
BATT	BATTERY
CR	CONTROL RELAY
DC	DIRECT CURRENT
ECM	ENGINE CONTROL MODULE
ECR	ENGINE CRANK RELAY
ELR	ENCLOSURE LIGHTS RELAY
E-STOP	EMERGENCY STOP
FCR	FUEL CONTROL RELAY
FLS	FUEL LEVEL SENDER
GFR	GERNERAL FAULT RELAY
GND	GROUND
GRR	GENERATOR RUNNING RELAY
LCL	LOW COOLANT LEVEL
MCB	MINIATURE CIRCUIT BREAKER
OF	AUXILIAR SWITCH
PMG	PERMANENT MAGNET GENERATOR
Q/1	AUXILIAR SWITCH
SD	ALARM SWITCH
STR	SHUNT TRIP RELAY
SY	ALARM SWITCH
TERM	PANEL TERMINAL
VFC	VOLT FREE CONTACT

SYMBOL LEGEND TABLE

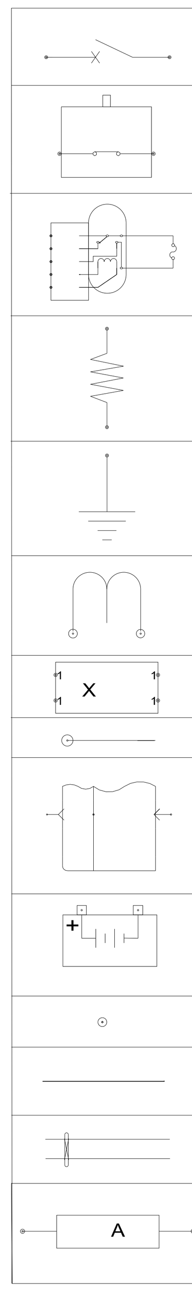

SYMBOL	DESCRIPTION
	MINIATURE CIRCUIT BREAKER
	EMERGENCY STOP PUSHBUTTON
	FUSED AUTOMOTIVE RELAY
	RESISTOR
	EARTH/GROUND
	CURRENT TRANSFORMER
	PANEL TERMINAL
	TERMINAL
	CONNECTOR
	BATTERY
	SPLICE
	WIRE
	SCREEN CABLE
	FUSE

INDEX TABLE

SHEET INDEX	DESCRIPTION
1	CROSS REFERENCE SHEET INDEX. NOTES
2	CONTROL SCHEMATIC
3	POWER SCHEMATIC
4	POWER SCHEMATIC (SINGLE PHASE)
5	ADDITIONAL OPTIONS
6	AC OPTIONS
7	ADDITIONAL INFORMATION

HARNESS LAYER TABLE

IDENT	PART NO	CHG	LOC	DESCRIPTION	NOTE
HARNESS AS.	-	-	-	-	-
A	596-2201	01	SH2	D125-D200 MAIN HARNESS	-
A	598-3162	01	SH2	D60-D100 MAIN HARNESS	-
AN	578-6063	01	SH5	ANNUNCIATOR HARNESS	-
AX	565-9586	00	SH5	AUX CONTACTS AND SHUNT TRIP	-
B	577-8429	01	SH5	PLG 641&601 MODBUS HARNESS	-
C	396-1978	00	SH2	E-STOP LINK (OPEN SET)	-
CD	605-2916	00	SH6	GFCI HARNESS	-
E	396-1928	03	SH2	E-STOP HARNESS (ENCLOSED SET)	-
EL	605-8468	00	SH5	ENCLOSURE LIGHTS HARNESS	-
ER	604-4015	00	SH6	BATTERY-CHARGER HARNESS	-
FR	605-8326	00	SH6	SHORE POWER L1 LINK	-
GR	605-3114	00	SH5	GENSET RUNNING & COMMON ALARM	-
PG	443-0637	01	SH3	PMG ADAPTOR HARNESS	
PM	604-4018	00	SH3	PMG ADAPTOR HARNESS	
RC	604-4020	00	SH6	ALTERNATOR SPACE HEATER HARNESS	-
T	577-3930	01	SH5	PLG 641&601 POWER SUPPLY	-
Y	586-4861	00	SH5	PLG 641&601 CAN HARNESS	-
WIRE AS./CABLE AS.	-	-	-	-	-
N	-	-	SH2	BATTERY NEGATIVE	-
P	-	-	SH2	BATTERY POSITIVE	-

NOTE A: FACTORY WIRING NOT PROVIDED AS STANDARD. REFER TO MANUFACTURER INSTALLATION INSTRUCTIONS.

NOTE B: RESISTOR TO BE REMOVED IF ADDITIONAL EXPANSION MODULES ARE CONNECTED.

1E5167A INT-PROP
1E2722G DRAWING
1E0198W BRAND MARKINGS
1E0013Y CONFIDENTIALITY
1E0012A INTERPRETATION
1E0011 INTPR & TOL
Caterpillar: Confidential Yellow
PROD X OTHER
UNLESS OTHERWISE SPECIFIED DIMENSIONS ARE IN mm DIMENSIONS W/O TOL ARE BASIC
VERSION PRIMARY X TYPE SECONDARY
THIRD ANGLE PROJECTION
SHEET 1 OF 7
DWG CONTROL W971
CATERPILLAR
THE INFORMATION HEREON IS THE PROPERTY OF CATERPILLAR INC. AND/OR ITS SUBSIDIARIES. WITHOUT WRITTEN PERMISSION, ANY COPYING, TRANSMITTAL TO OTHERS, AND ANY USE EXCEPT THAT FOR WHICH IT IS LOANED, IS PROHIBITED
DIAGRAM-WIRING
(1100GC D60-D200)
596-2230 VER - CHG 00 2X3

CONTROL SCHEMATIC

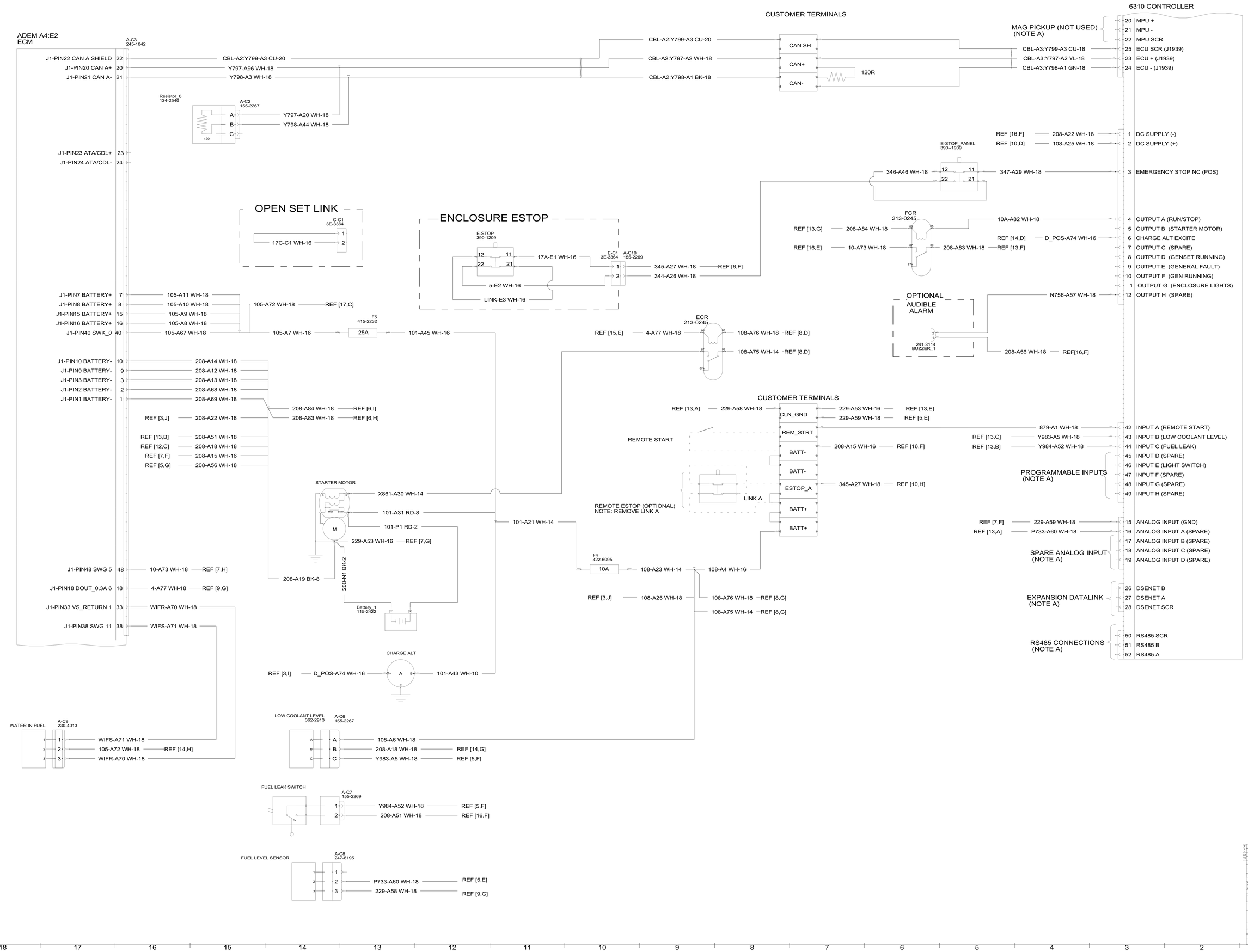

1E5167A	INT-PROP
1E7720G	DRAWING
1E0198W	BRAND MARKINGS
1E0013Y	CONFIDENTIALITY
1E0012A	INTERPRETATION
1E6011	INTPR & TOL
	Caterpillar Confidential Yellow

PROD X OTHER

UNLESS OTHERWISE SPECIFIED DIMENSIONS ARE IN MM DIMENSIONS INCL TOL ARE BASIC

VERSION PRIMARY X
TYPE SECONDARY

THIRD ANGLE PROJECTION

SHEET 2 OF 7
SWG CONTROL: W971

CATERPILLAR

THE INFORMATION HERE IS THE PROPERTY OF CATERPILLAR INC. (NOTE TO PRINTER: DO NOT PRINT THIS NOTICE ON ANY DRAWING THAT IS NOT STAMPED AND SET ON CLIENT THAT FOR WHICH IT IS LICENSED. IN PRINTING THIS NOTICE, PRINT ONLY ON THE LICENSED DRAWING.)

DIAGRAM-WIRING
(110GC D60-D200)

596-2230 | VER. 2 | CHG. 00 | 2X3

POWER SCHEMATIC

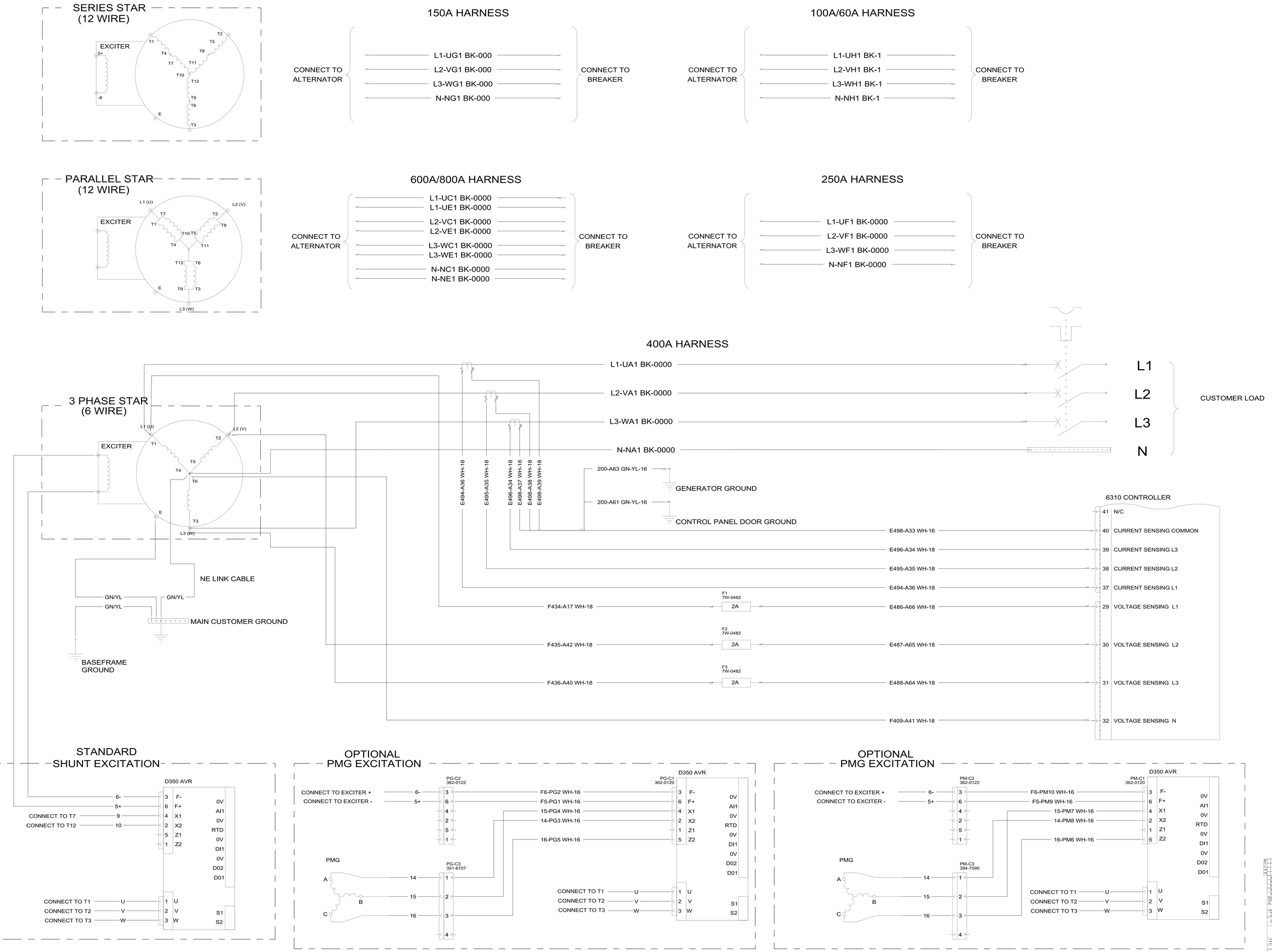

POWER SCHEMATIC (SINGLE PHASE)

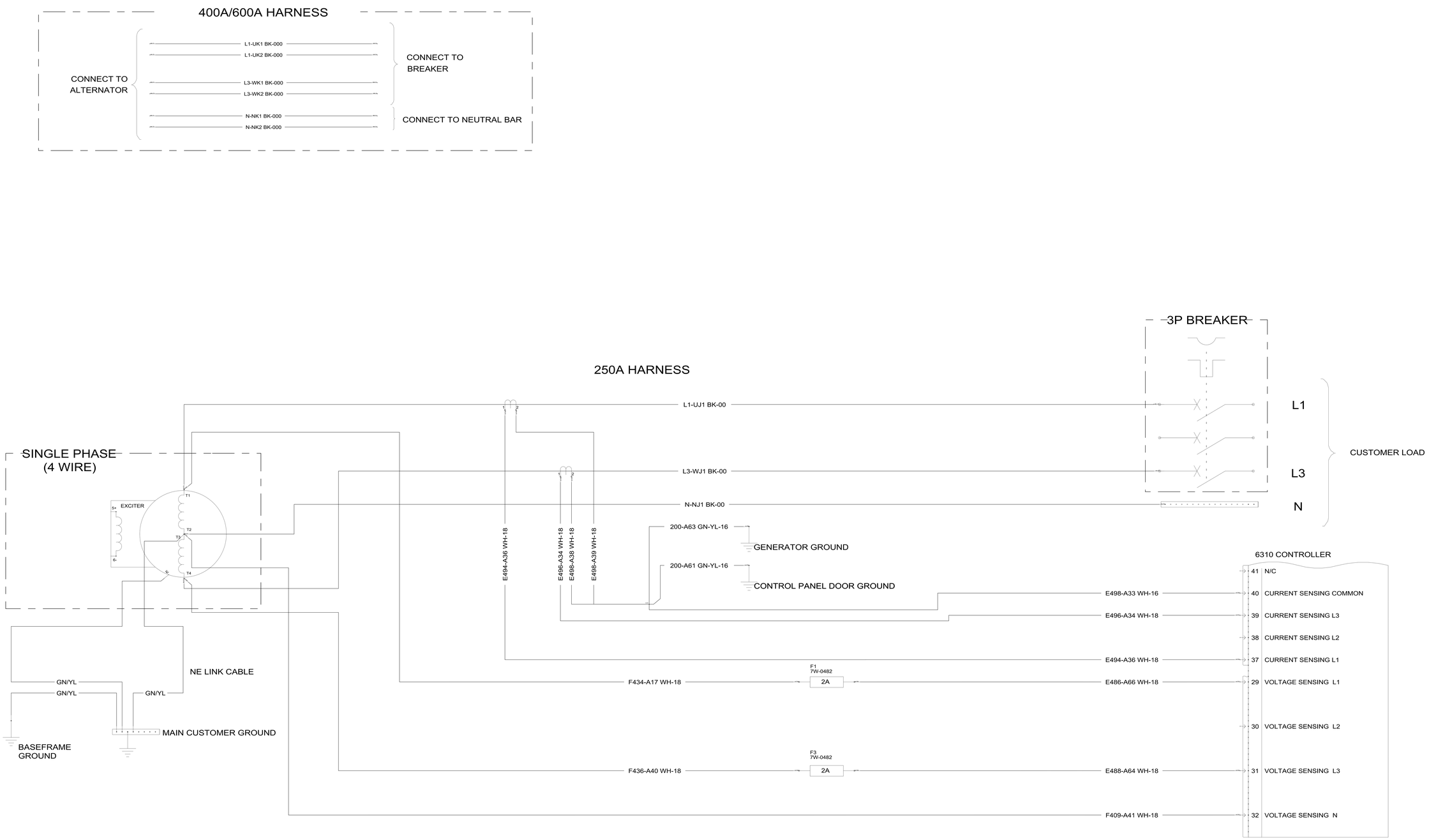

1E5167A	INT-PROP
1E2722G	DRAWING
1E0198V	BRAND MARKINGS
1E0013Y	CONFIDENTIALITY
1E0012A	INTERPRETATION
1E0011	INTPR & TOL
Caterpillar: Confidential Yellow	

UNLESS OTHERWISE SPECIFIED DIMENSIONS ARE IN MM DIMENSIONS NOT TO ARE SUBC

VERSION PRIMARY A
TYPE SECONDARY
SHEET 4 OF 7
DWG CONTROL W971

CATERPILLAR

THE INFORMATION HEREIN IS THE PROPERTY OF CATERPILLAR INC. AND IS TO BE KEPT CONFIDENTIAL. NO PART OF THIS DOCUMENT MAY BE COPIED, TRANSMITTED, OR DISPLAYED, NOR MAY ANY INFORMATION BE DISCLOSED.

DIAGRAM-WIRING
(1100GC D60-D200)

596-2230 | VER. - | CHG. 00 | 2X3

ADDITIONAL OPTIONS

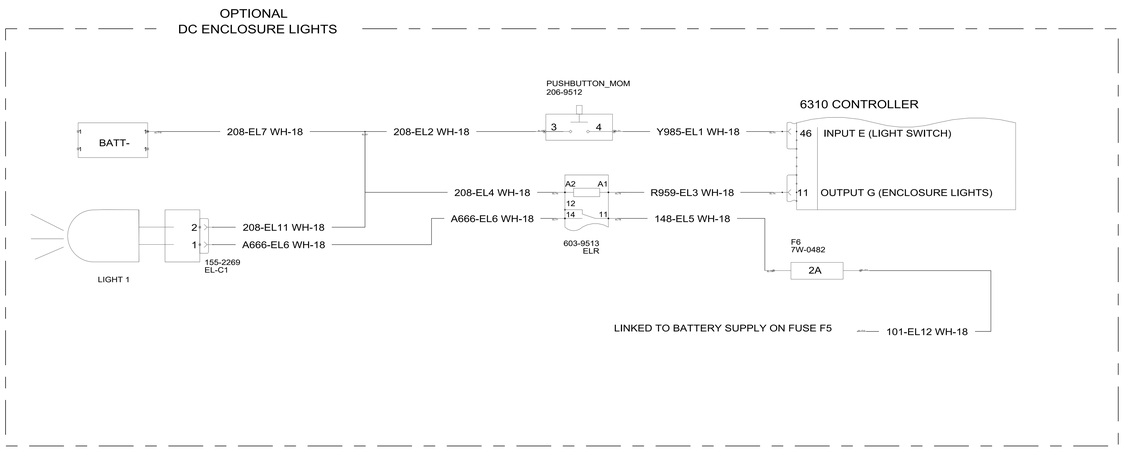

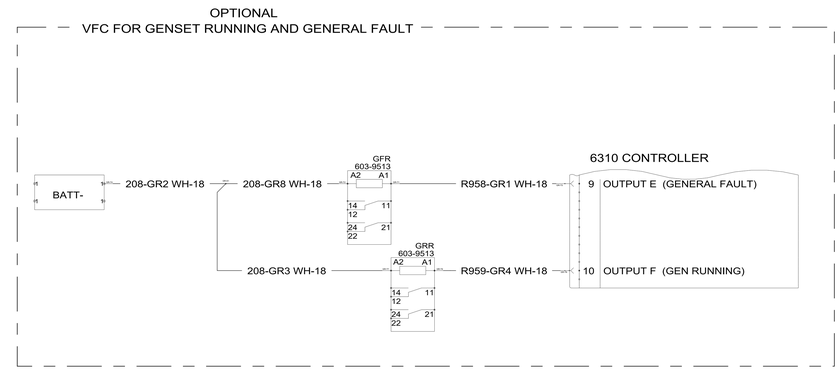

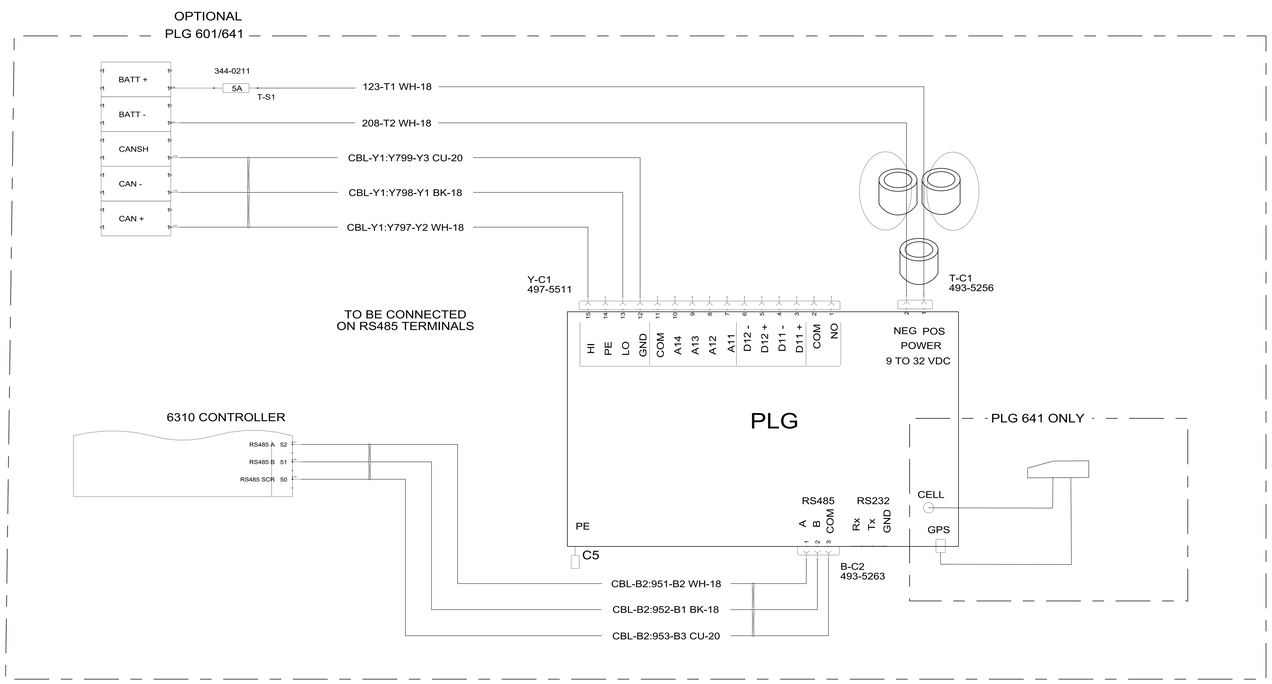

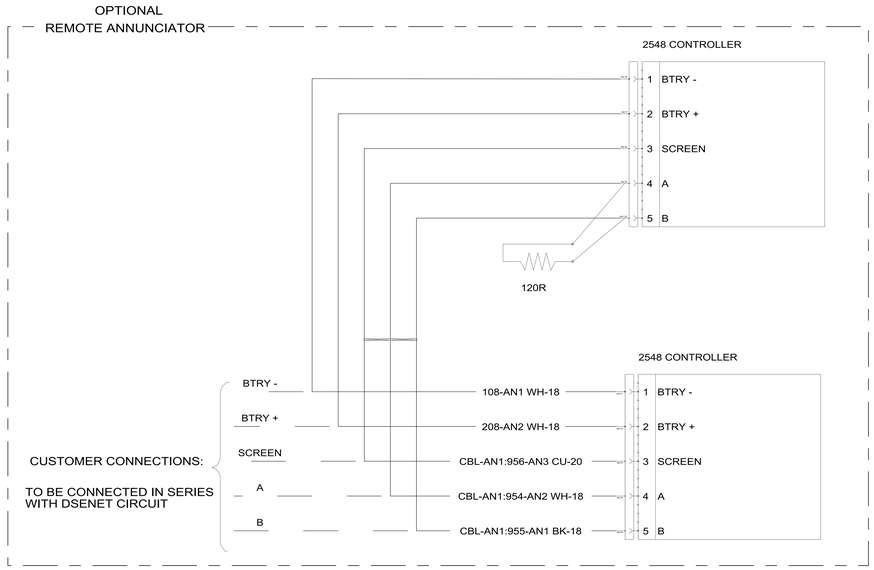

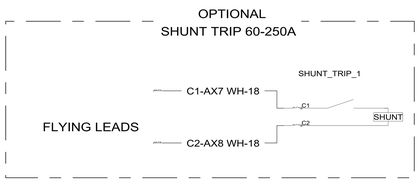

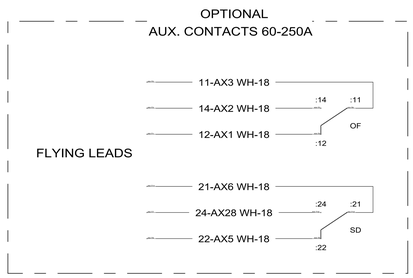

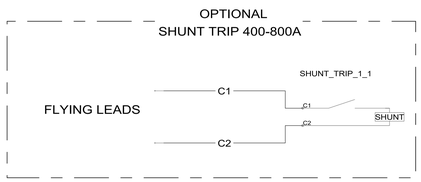

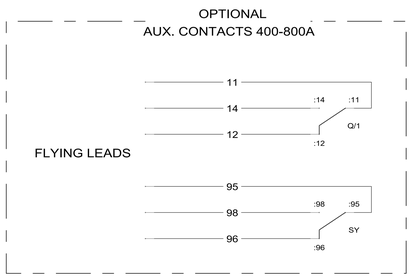

1E5167A	INT-PROP
1E27225	DRAWING
1E0198W	BRAND MARKINGS
1E0013Y	CONFIDENTIALITY
1E0012A	INTERPRETATION
1E5011	INTPR & TOL
Caterpillar: Confidential Yellow	

[INDX] x [DTHS]

UNLESS OTHERWISE SPECIFIED DIMENSIONS ARE IN mm DIMENSIONS IN() TOL ARE BASIC — VERSION: PRIMARY — TYPE: SECONDARY

THIRD ANGLE PROJECTION — SHEET 5 OF 7 — DWG CONTROL: W971

CATERPILLAR

THE INFORMATION HEREON IS THE PROPERTY OF CATERPILLAR INC. NEITHER ITS DISCLOSURE NOR THE MAKING OF ANY COPY OR REPRODUCTION HEREOF WITHOUT THE OWNER'S WRITTEN AND FIRM CONSENT THAT FIRM WHEREVER IS LEGALLY PERMISSIBLE.

DIAGRAM-WIRING
(110/DGC D60-D200)

596-2230 — VER. — CHG. 00 — 2X3

AC OPTIONS

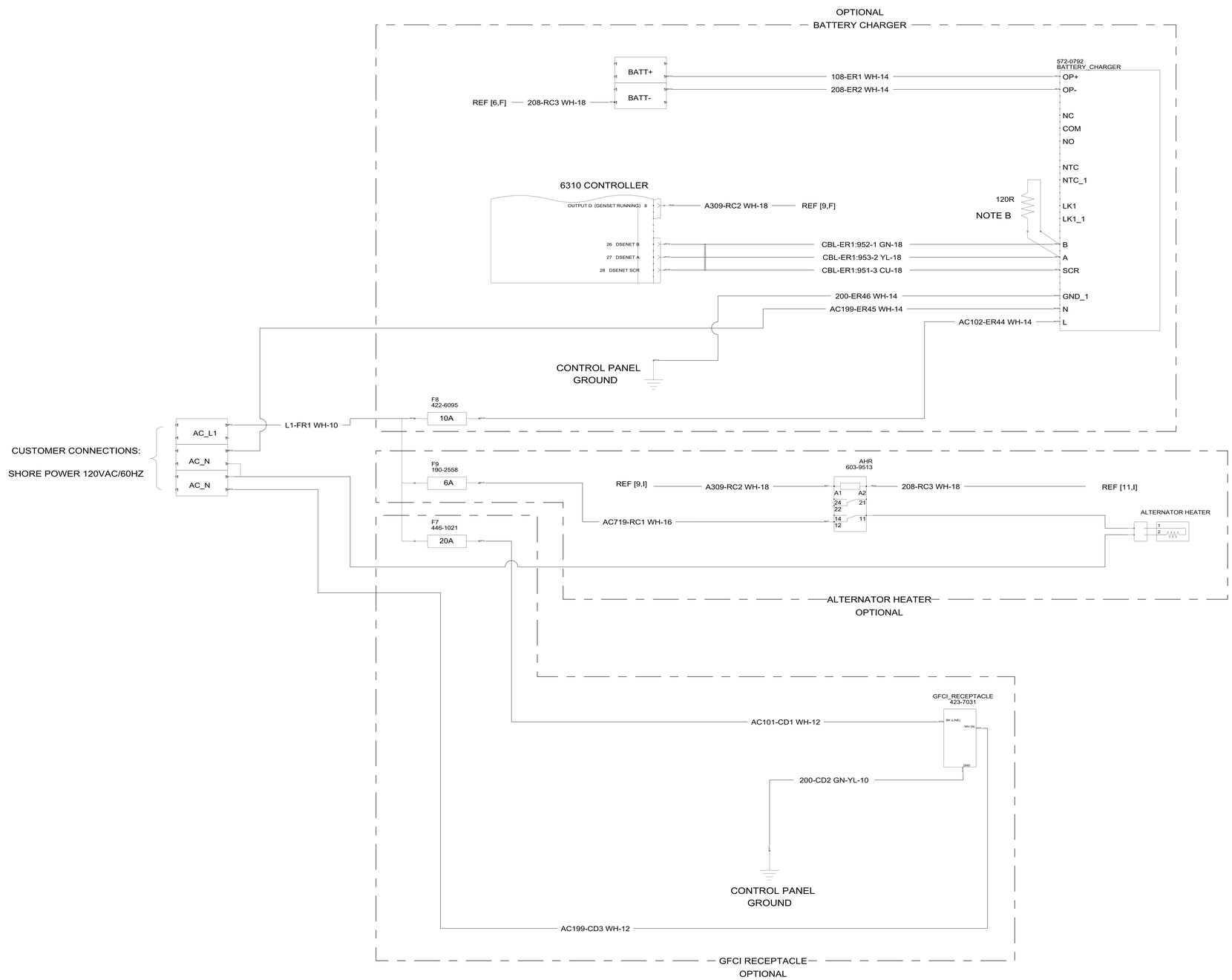

1E5167A	INT-PROP
1E2720G	DRAWING
1E0198W	BRAND MARKINGS
1E0013Y	CONFIDENTIALITY
1E0012A	INTERPRETATION
1E0011	INTPR & TOL
Caterpillar: Confidential Yellow	

PROG X_ITHER

UNLESS OTHERWISE SPECIFIED DIMENSIONS ARE IN MM | VERSION: PRIMARY
DIMENSIONS INCL TOL ARE BASIC | TYPE: SECONDARY
THIRD ANGLE PROJECTION | SHEET 6 OF 7
DWG CONTROL | W971

CATERPILLAR

THE INFORMATION HEREIN IS THE PROPERTY OF CATERPILLAR INC. AND/OR ITS SUBSIDIARIES AND MUST BE KEPT CONFIDENTIAL AND NOT COPIED, DISTRIBUTED OR DISCLOSED WITHOUT PERMISSION.

DIAGRAM-WIRING
(1100GC D60-D200)

596-2230 | VER. - | CHG. 00 | 2X3

ADDITIONAL INFORMATION - COMPONENT DETAILS & CUSTOMER CONNECTIONS

MAIN CUSTOMER RAIL
(OPTIONS INCLUDED)

COMPONENT	DESCRIPTION
AHR	ALTERNATOR SPACE HEATER RELAY
F7	GFC1 FUSE (20A)
F8	BATTERY CHARGER FUSE (10A)
F9	ALTERNATOR HEATER FUSE (6A)

FUSE ID	CURRENT RATING	WIRE ID	DESCRIPTION
F4	10A	101; 108	PANEL SUPPLY
F5	25A	101; 105	ECM POWER
F6	2A	148; 101	ENCLOSURE LIGHTS

RAIL	CURRENT RATING	DESCRIPTION
GFR	8A	GENERAL FAULT RELAY
GRR	8A	GENSET RUNNING RELAY
ELR	8A	ENCLOSURE LIGHTS RELAY

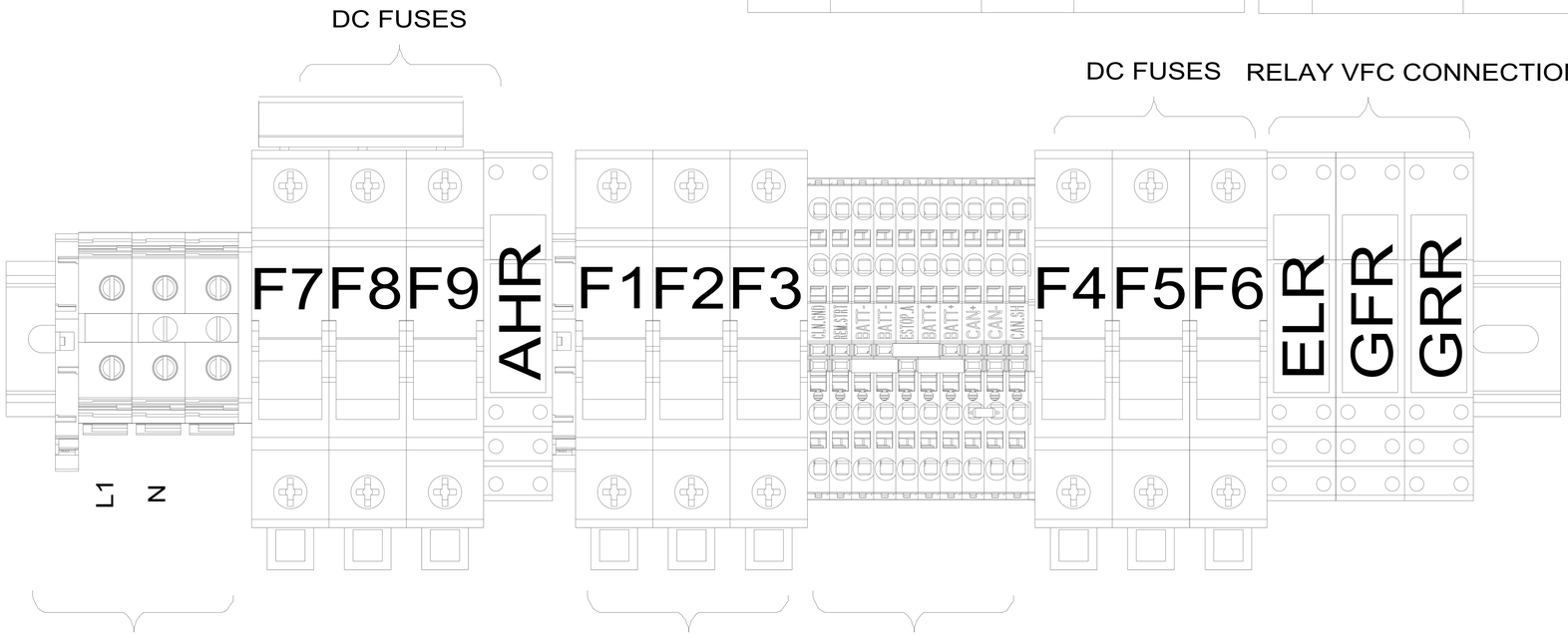

COMPONENT	DESCRIPTION
L1	SHORE POWER AC SUPPLY LINE
N	SHORE POWER AC SUPPLY NEUTRAL

FUSE ID	CURRENT RATING	WIRE ID	DESCRIPTION
F1	2A	F434; E486	L1 SENSING AC
F2	2A	F435; E487	L2 SENSING AC
F3	2A	F436; E488	L3 SENSING AC

TERMINAL ID	WIRE ID	DESCRIPTION
CLN_GND	229	CLEAN GROUND FOR ANALOG INPUTS
REM_STRT	879	REMOTE START INPUT
BATT-	208	BATTERY NEGATIVE
BATT-	208	BATTERY NEGATIVE
ESTOP_A	345	GENSET CONTROLLER ESTOP INPUT
BATT+	108	BATTERY POSITIVE (10A FUSED)
BATT+	108	BATTERY POSITIVE (10A FUSED)
CAN+	Y797	CAN + COMMS
CAN-	Y798	CAN - COMMS
CAN_SH	Y799	CAN SH COMMS

1E5167A INT-PROP
1E27220 DRAWING
1E0198W BRAND MARKINGS
1E0013Y CONFIDENTIALITY
1E0012A INTERPRETATION
1E0011 INTPR & TOL
Caterpillar: Confidential Yellow

[REV] = [YYMM]

UNLESS OTHERWISE SPECIFIED: DIMENSIONS ARE IN mm
DIMENSIONS INCL TOL AND BASIC

VERSION: PRIMARY
TYPE: SECONDARY

SHEET 7 OF 7
DWG CONTROL: W971

PROJECTION: PROGRESSIVE

CATERPILLAR

THE INFORMATION HEREIN IS THE PROPERTY OF CATERPILLAR INC. AND/OR ITS SUBSIDIARIES. IT MAY NOT BE DISCLOSED TO THIRD PARTIES WITHOUT WRITTEN CONSENT, AND MAY NOT BE COPIED THAT FOR WHICH IT IS LOANED, IN PRINCIPLE.

DIAGRAM-WIRING
(110GGC D60-D200)

596-2230

VER. A
CKD. DD
2X3

METRIC 610-4588

QTY	ENGINE CONNECTIONS	SIZE	SHEETS
1	EXHAUST	ø127.0 [ø5.00] OD	2
1	FUMES DISPOSAL HOSE	ø25.4 [ø1.00] ID	3
1	COOLANT DRAIN	13/16–16 THD	3

QTY	TANK CONNECTIONS	SIZE	SHEET
1	FUEL LEVEL SWITCH	1–1/2" NPTF	4
1	VENT	1–1/4" NPT	4
1	VALVE	4–8 NPTF THD	4
1	FUEL RETURN	3/4–16 THD	4
1	FUEL SUPPLY	3/4–16 THD	4

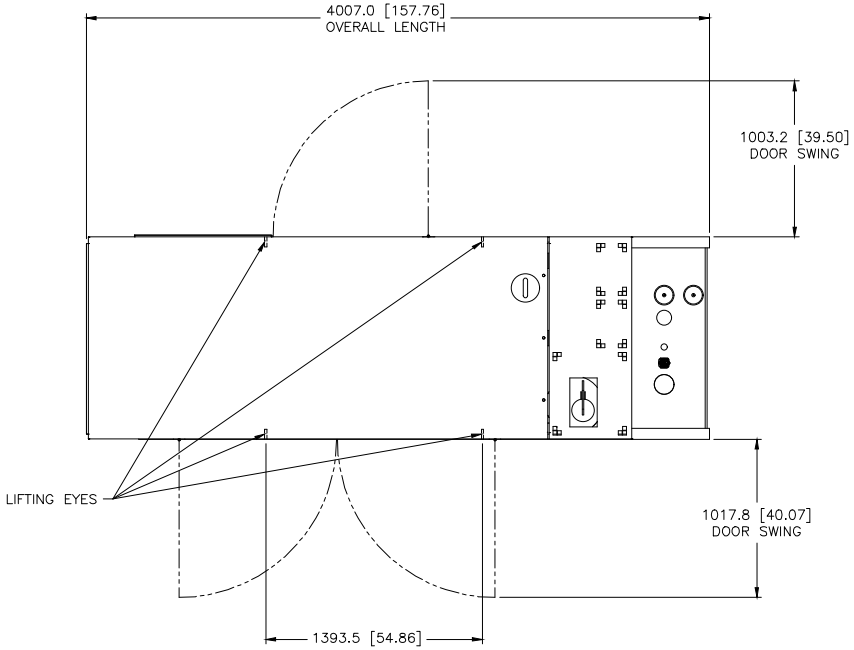

TOP VIEW

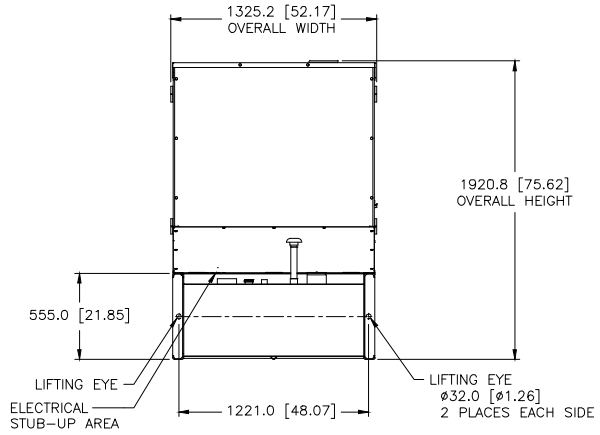

FRONT VIEW

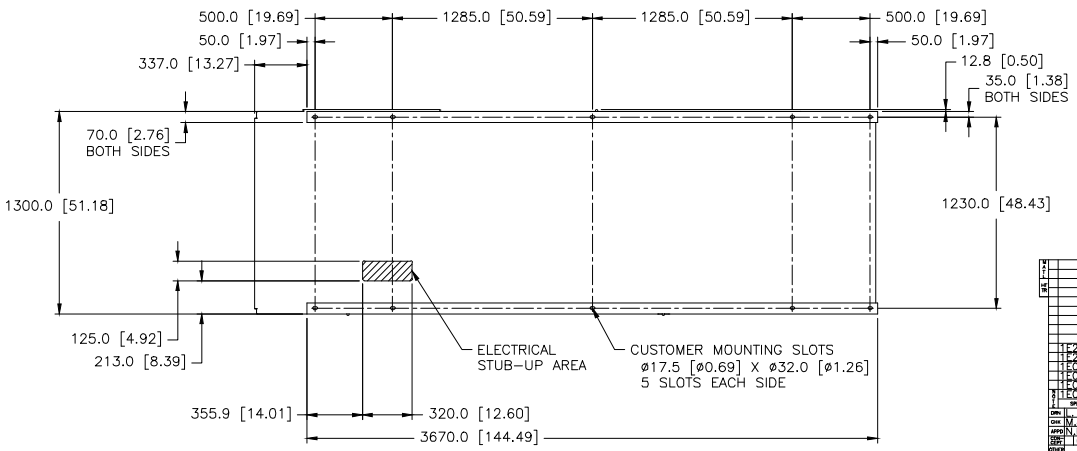

FOOTPRINT
(DIMENSIONED OUTLINE VIEW FROM ABOVE)
(RIGHT SIDE ORIENTATION)

MODEL	TYPE	PRICING AR	ENCLOSURE	TANK BASE
C7.1	–	LS–4238 CHG 00	LS–4330 CHG 00	LS–4267 CHG 00
		LS–4239 CHG 00		
		LS–4240 CHG 00	LS–4331 CHG 00	
		LS–4241 CHG 00		

PACKAGE LIFTED IN 4 PLACES ON TANK

PACKAGE SHOWN WITH MORE DETAIL ON FOLLOWING SHEETS

SPEC NO.	NAME
1E2955B	IDENT
1E2733	DRAWING–AUTOCAD
1E0198W	BRAND MARKINGS
1E0013E	CONFIDENTIALITY
1E0012A	INTERPRETATION
1E0011	INTPR & TOL

DRN: L. FENG
CHK: M.J. SWIFT
APPD: N.P. MOUNTJOY
SIZE: 24" | FINISH: | WEIGHT:
OTHER: RECORDS X

UNLESS OTHERWISE SPECIFIED
DIMENSIONS ARE IN: MM (INCH)
DIMENSIONS A/S TOL AFB BSIB3

SCALE 1 = 10
TYPE/REPRESENTATION: 3 1 1Dem.Dr. 3d
SHEET 1 OF 4
00 29JAN21
REV. PROJECTS CHG DATE

CATERPILLAR INC.

THE INFORMATION HEREIN IS THE PROPERTY OF MITSUBISHI HEAVY INDUSTRIES, LTD. AND IS TO BE KEPT CONFIDENTIAL. NOT TO BE REPRODUCED, DISCLOSED OR USED WITHOUT WRITTEN PERMISSION.

INSTALLATION–COMPOSITE
C7.1 ENCL W/TANK BASE

610–4588 | USA | CONTROL | SIZE A | SHEET | W971 | E

METRIC 610-4588

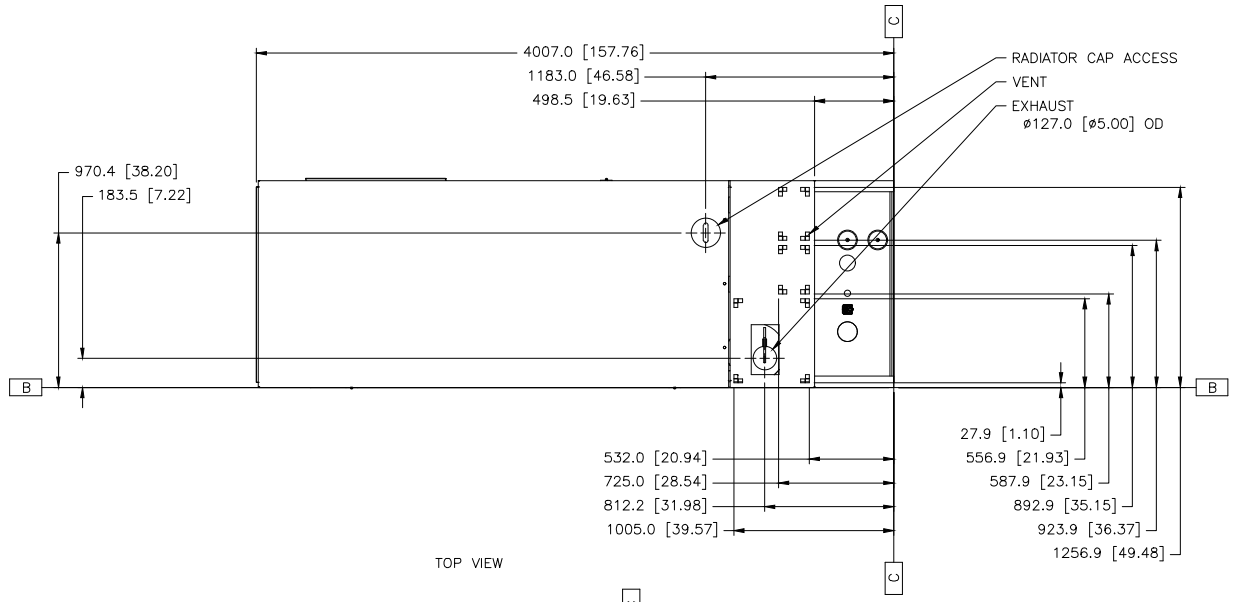

TOP VIEW

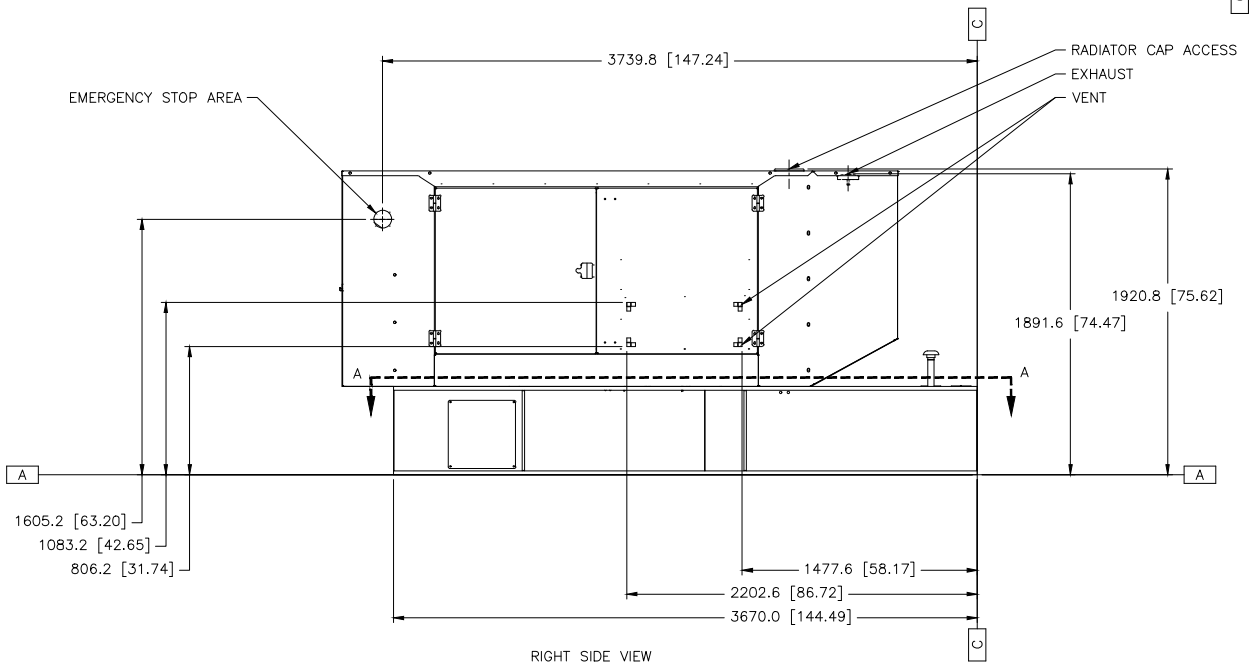

RIGHT SIDE VIEW

REVISIONS			
	1E2966B IDENT		
	1E2733 DRAWING-AUTOCAD		
	1E0198W BRAND MARKINGS		
	1E0013G CONFIDENTIALITY		
	1E0012A INTERPRETATION		
	1E0011 INTPR & TOL		

	SPEC NO.	NAME		
DRN		L. FENG		
CHK		M. J. SWIFT		
APPD		N.P. MOUNJOY		
CODE	CHP	PROJ	PROG	
OTHER	RECORDS	X		

UNLESS OTHERWISE SPECIFIED
DIMENSIONS ARE IN MM (INCH)
DIMENSIONS W/O TOL ARE BASIC

SCALE 1 = 10 | THIRD ANGLE PROJECTION | CHG 00 | DATE 29JAN21

SHEET 2 OF 4

CATERPILLAR INC.

THE INFORMATION HEREON IS THE PROPERTY OF CATERPILLAR INC. AND/OR ITS AFFILIATES AND MAY NOT BE REPRODUCED OR DISCLOSED WITHOUT PRIOR WRITTEN PERMISSION. ALL RIGHTS IN THE INFORMATION HEREON ARE RESERVED.

INSTALLATION-COMPOSITE
C7.1 ENCL W/TANK BASE

610-4588 - | USER | DCS 24 SUB 1 | CHANGE | W971 | E

METRIC 610-4588

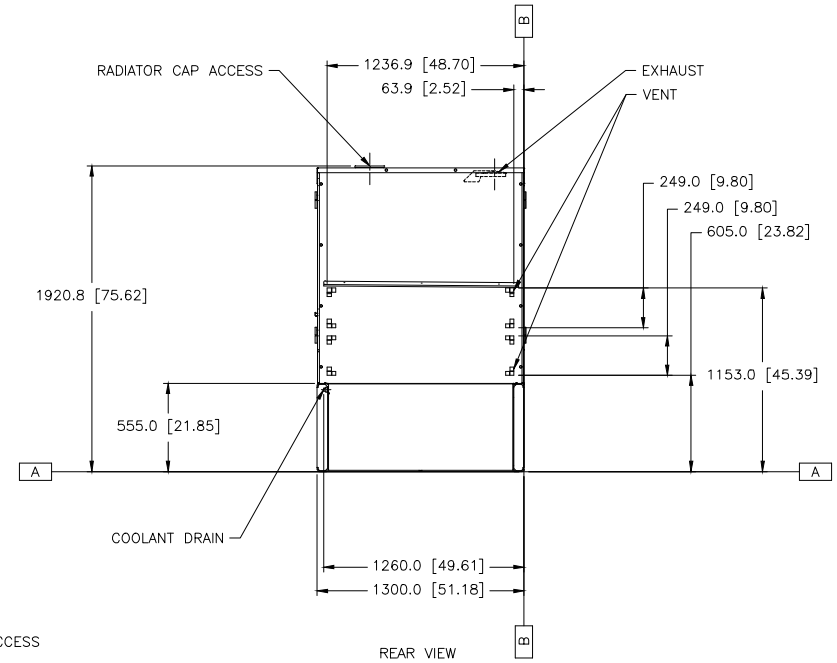

REAR VIEW

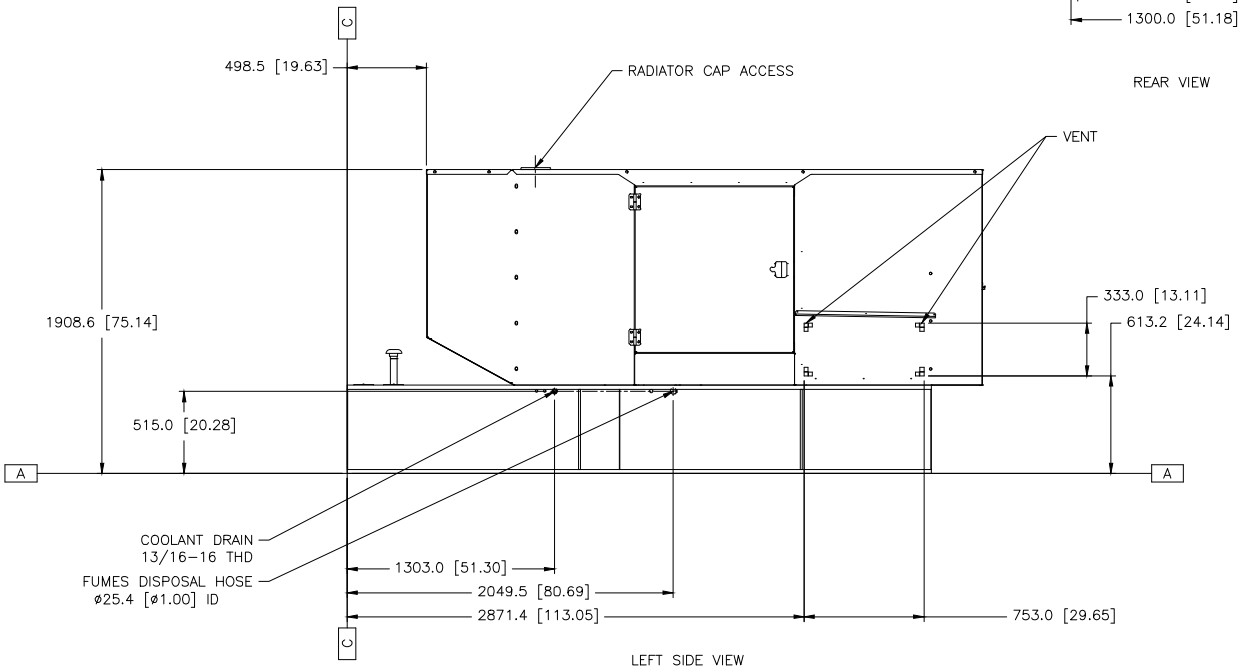

LEFT SIDE VIEW

REVISIONS	
1E2966B	IDENT
1E2733	DRAWING-AUTOCAD
1E0198W	BRAND MARKINGS
1E0013G	CONFIDENTIALITY
1E0012A	INTERPRETATION
1E0011	INTPR & TOL

	SPEC NO.	NAME		
DRN		L. FENG		
CHK		M. J. SWIFT		
APPD		N.P. MOUNJOY		
CODE	CHP	PROJ	PROG	
OTHER		RECORDS	X	

UNLESS OTHERWISE SPECIFIED
DIMENSIONS ARE IN MM (INCH)
DIMENSIONS W/O TOL ARE BASIC

SCALE 1 = 10
WEIGHT(KILOGRAMS) 00 29JAN21
SHEET 3 OF 4 THIRD ANGLE PROJECTION CHG DATE

CATERPILLAR INC.

THE INFORMATION HEREON IS THE PROPERTY OF CATERPILLAR INC. NEITHER THIS DRAWING NOR ANY PART HEREOF CAN BE USED, COPIED OR DISCLOSED WITHOUT PRIOR WRITTEN CONSENT OF CATERPILLAR INC. ALL RIGHTS IN THE DESIGN OF CATERPILLAR INC. ARE RESERVED.

INSTALLATION-COMPOSITE
C/.1 ENCL W/TANK BASE

610-4588 - USER DOCS 24 SUB1 CHANGE W971 E

METRIC 610-4588

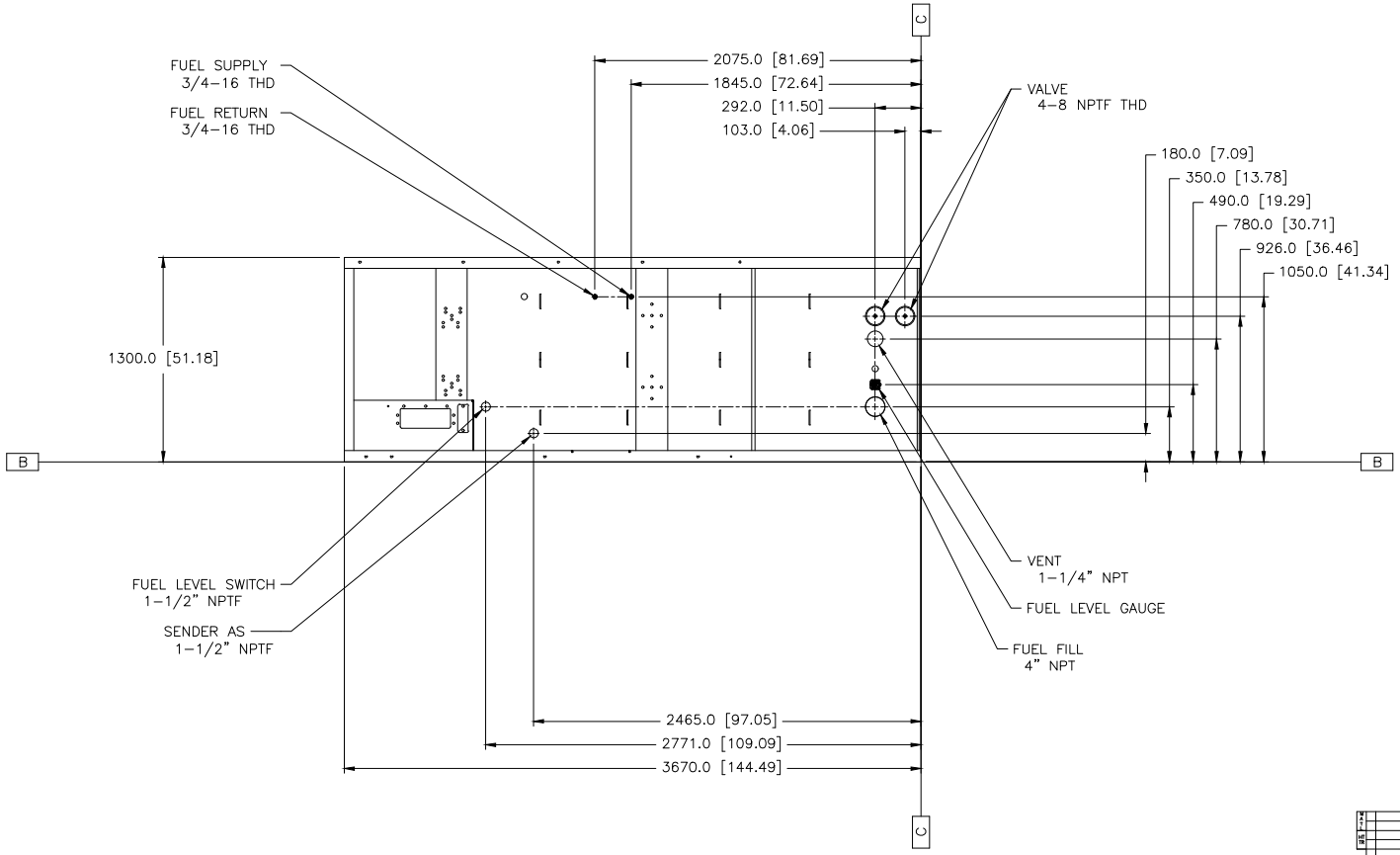

A-A VIEW (TANK TOP)
LS4267 CHG 00
(RIGHT SIDE ORIENTATION)

REV	SPEC NO.	NAME	
	1E2966B	IDENT	
	1E2733	DRAWING-AUTOCAD	
	1E0198W	BRAND MARKINGS	
	1E0013G	CONFIDENTIALITY	
	1E0012A	INTERPRETATION	
	1E0011	INTPR & TOL	

DRN L. FENG
CHK M. J. SWIFT
APPD N. P. MOUNTJOY
DTADE RECORDS X

UNLESS OTHERWISE SPECIFIED
DIMENSIONS ARE IN MM (INCH)
DIMENSIONS N/O TOL ARE BASIC

SCALE 1 = 10
THIRD ANGLE PROJECTION
SHEET 4 OF 4

00 29JAN21
CHG DATE

CATERPILLAR INC.

THE INFORMATION HEREON IS THE PROPERTY OF CATERPILLAR INC. AND/OR ITS SUBSIDIARIES AND MAY NOT BE REPRODUCED OR DISCLOSED WITHOUT PRIOR WRITTEN PERMISSION.

INSTALLATION-COMPOSITE
C/T ENCL W/TANK BASE

610-4588 - 00 W971 E

	UNITED STATES ENVIRONMENTAL PROTECTION AGENCY **2021 MODEL YEAR** **CERTIFICATE OF CONFORMITY** **WITH THE CLEAN AIR ACT**	**OFFICE OF TRANSPORTATION** **AND AIR QUALITY** **ANN ARBOR, MICHIGAN 48105**

Certificate Issued To: Perkins Engines Co Ltd (U.S. Manufacturer or Importer) **Certificate Number: MPKXL07.0PW1-001**	**Effective Date:** **08/26/2020** **Expiration Date:** **12/31/2021**	**Byron J. Bunker, Division Director** **Compliance Division**	**Issue Date:** **08/26/2020** **Revision Date:** **N/A**

Model Year: 2021 **Manufacturer Type:** Original Engine Manufacturer **Engine Family:** MPKXL07.0PW1	**Mobile/Stationary Indicator:** Stationary **Emissions Power Category:** 225<=kW<450 **Fuel Type:** Diesel, Non-Standard Fuel **After Treatment Devices:** No After Treatment Devices Installed **Non-after Treatment Devices:** Electronic Control, Engine Design Modification

Pursuant to Section 111 and Section 213 of the Clean Air Act (42 U.S.C. sections 7411 and 7547) and 40 CFR Part 60, and subject to the terms and conditions prescribed in those provisions, this certificate of conformity is hereby issued with respect to the test engines which have been found to conform to applicable requirements and which represent the following engines, by engine family, more fully described in the documentation required by 40 CFR Part 60 and produced in the stated model year.

This certificate of conformity covers only those new compression-ignition engines which conform in all material respects to the design specifications that applied to those engines described in the documentation required by 40 CFR Part 60 and which are produced during the model year stated on this certificate of the said manufacturer, as defined in 40 CFR Part 60.

It is a term of this certificate that the manufacturer shall consent to all inspections described in 40 CFR 1068 and authorized in a warrant or court order. Failure to comply with the requirements of such a warrant or court order may lead to revocation or suspension of this certificate for reasons specified in 40 CFR Part 60. It is also a term of this certificate that this certificate may be revoked or suspended or rendered void *ab initio* for other reasons specified in 40 CFR Part 60.

This certificate does not cover engines sold, offered for sale, or introduced, or delivered for introduction, into commerce in the U.S. prior to the effective date of the certificate.