Key Internet modem parts for under £60

ELECTRONICS WORLD + WIRELESS WORLD

Denmark DKr. 65.00
Germany DM 15.00
Greece Dra.950
Holland Dfl. 14
Italy L. 8000
IR £3.30
Singapore S$12.60
Spain Pts. 750
USA $4.94

A REED BUSINESS PUBLICATION
SOR DISTRIBUTION

November 1995 £2.10

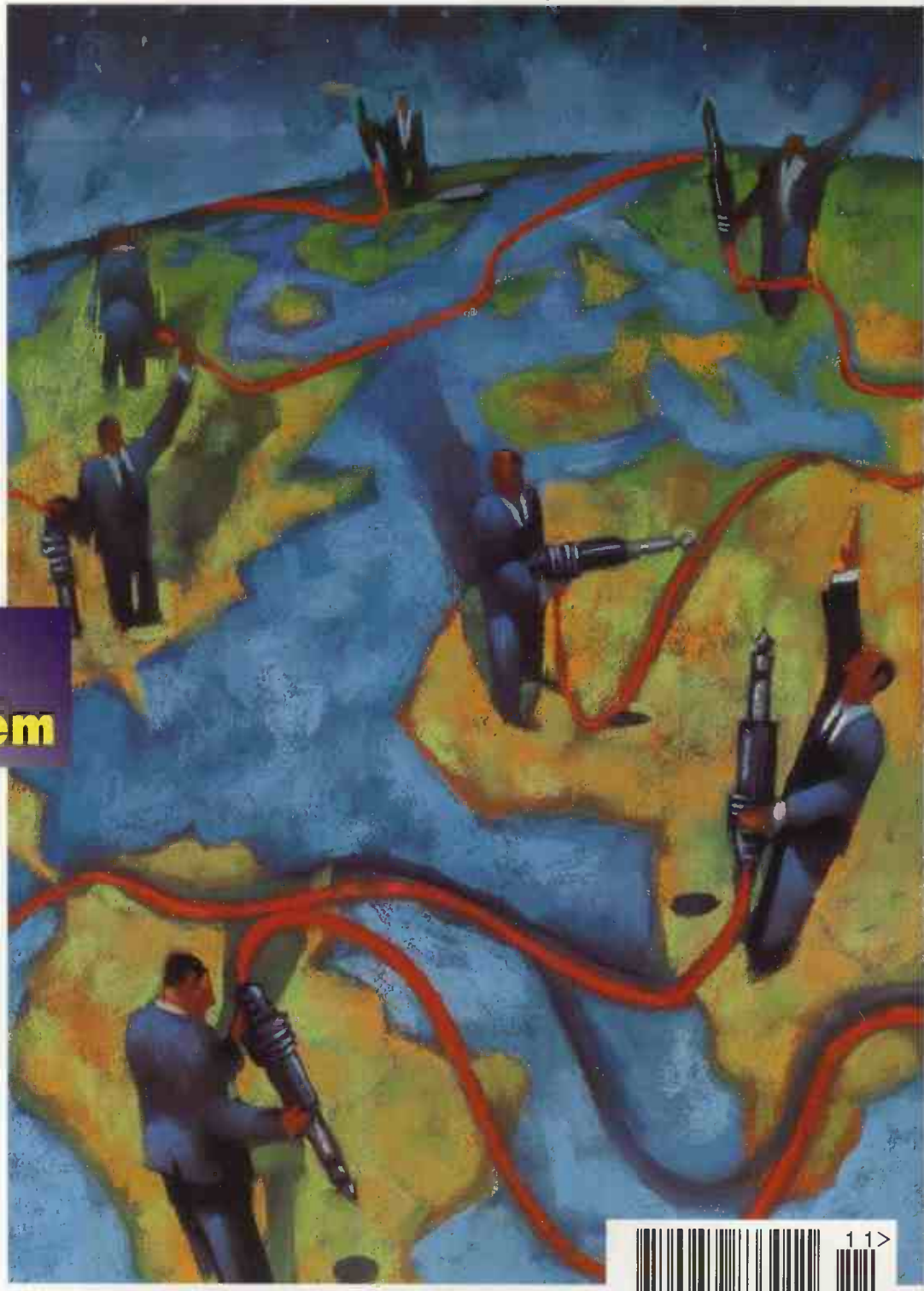

Isolate RS232

Optoelectronics investigated

Mathplus reviewed

Transforms in C++

14.4kbaud fax/data modem

Power and Class-C

Linsley-Hood noise reducer

Applying the ZR78L05 regulator

EW+WW exclusive – magnetic sensor offer

9 770959 833011 11>

4 reasons why you should choose...

ATMEL MICRO-PRO

TWO FREE microcontrollers
PSU, parallel cable & data sheets
plus FREE IC extractor tool included

NOW ONLY £99*

ATMEL AT89C2051
- 20 PIN - 8051 derivative
- FLASH programmable (1000+ times)
- Erase program & verify device in under 5 seconds

(1) FAST data transfer- connects to PC parallel port

(2) Field programmable hardware for FREE future device support

(3) Accepts up to 40 PIN devices directly. Additional adaptors available for PLCC.

(4) MICRO PRO is approved by ATMEL for programming their complete range of FLASH microcontrollers

FLASH

THE FULL ATMEL FLASH MICROCONTROLLER RANGE

	8951	8952	1051	2051
FLASH code ROM	4K	8K	1K	2K
RAM	128	256	64	128
I/O	32	32	15	15
Timer/Counter (16 bit)	2	3	1	2
Serial Port	YES	YES	NO	YES
Interrupt Sources	5	8	3	5
Pins (DIL/PLCC)	40/44	40/44	20	20
Special features		Timer 2	Comparator	Comparator
Price (1-24)	£14-85	£16-95	£4-70	£5-85

* Offer includes one AT89C1051, one AT89C2051 and one IC extractor tool.
Offer valid until 31st December 1995 when ordered direct through Equinox Technologies.
All prices shown exclude P&P & VAT plus any bank/credit charges for overseas customers and remain fixed until 31st December 1995. All items subject to availability.

For further information on our full range of development systems for the ATMEL microcontroller range please contact John Marriott at Equinox Technologies.

EQUINOX TECHNOLOGIES

229, Greenmount Lane, Heaton, Bolton, Lancashire BL1 5JB. UK.

Tel: (01204) 492010 Fax: (01204) 494883
Int. dialling code (UK (+44 1204)

E-mail: sales@equintec.demon.co.uk

Visit our Web page at:
www.demon.co.uk/equintec

CIRCLE NO. 101 ON REPLY CARD

CONTENTS

917 POWER-SAVING REGULATORS
New regulators designed for high-performance and reduced power consumption.

922 INTERNET MODEM
Joining the net? Phil Collins discusses an intelligent pc modem/fax card capable of sustained 57.6kbit/s throughput.

930 A NEW DIRECTION IN MAGNETIC SENSING
A new three-terminal magnetic sensor offers benefits in temperature sensitive field detection – even down to 10nT.

Magnetic sensors offer

EW+WW readers can obtain 20% discount on a new three-terminal magnetic sensor capable of detecting down to 10nT. See pages 930 and 933.

938 CONTROLLING AUDIO DYNAMIC RANGE
John Linsley-Hood's low-thd audio dynamic range controller incorporates a switched attenuator.

952 SURROUND SOUND STANDARDS POLARISE
Peter Willis looks at the pros and cons of two competing surround-sound standards – Dolby's AC-3 and Europe's MPEG-2.

954 ISOLATING RS-232
Douglas Clarkson shows how to isolate RS-232 without involving an independent power source.

960 DEEPER INTO DC ANALYSIS
Owen Bishop looks at dc analysis issues, including component value sweeping and the pitfalls of simulating oscillators.

964 MAXIMISING POWER TRANSFER IN CLASS-C
Researchers from Ontario present their evidence to disprove a recent statement concerning maximum power transfer.

970 REFLECTIONS ON OPTO-ELECTRONICS
Ian Hickman explains how to get the best out of opto-electronic emitters/detectors.

975 MATHPLUS OR MINUS?
Allen Brown looks at a piece of software designed to help teach and learn engineering mathematics.

979 TRANSFORMING IN C++
Gerard Moloney outlines how he developed a C++ library for performing geometric transforms.

989 WHAT'S THE DIFFERENCE?
Steve Winder discusses how to choose the right differential amplifier configuration.

REGULARS

907 COMMENT
PhoneDay fiasco

908 NEWS
Digital tv, Canada to adopt DAB, Standards delay video disk, Optical switching advances, GI wants Pace.

912 RESEARCH NOTES
Leeches and control technology, NASA and deep space, Mag-lev, From Albert Hall to Albert Terrace, Opto gyroscope for car navigation.

943 CIRCUIT IDEAS
20Hz to 250kHz generator, vco, mercury-cell replacement, digital mark:space, programmable switcher, high-input comparator, debouncer.

956 LETTERS
Shifting cultures, Sallen & Key distortion, hearing-aid plea,

983 NEW PRODUCTS
Pick of the month – classified for convenience.

994 APPLICATIONS
Power switchers for lcd backlights, Power factor correction for power supplies.

Cover – Jamel Akib

Audio – John Linsley Hood's expander and compressor is based on a switched attenuator – see page 938.

NASA has developed a pilotless, remotely-controlled aircraft powered by the sun – page 913.

EW+WW READER OFFER

Key Internet modem parts for under £60. This 14.4kbit/s fax and data modem for the pc is capable of 56kbit/s sustained throughput thanks to error checking and data compression – see pp. 922-926.

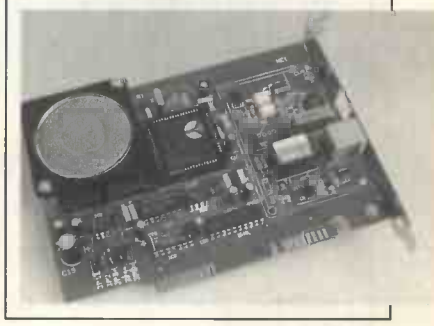

Next month: **Electronics in engine management, New thoughts on distortion, Interfacing GPS.**

DECEMBER ISSUE – ON SALE 30 NOVEMBER

NEW

quickroute 3.5

Schematic & PCB design for Windows™ 95 and 3.1

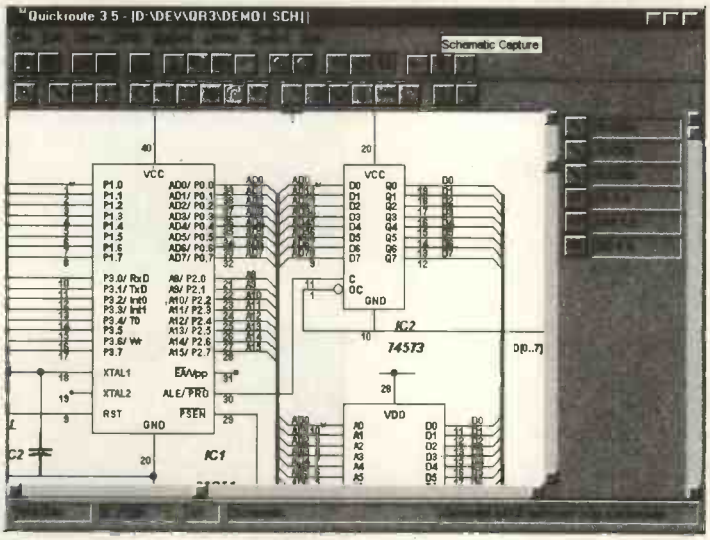

"moving from schematic to layout could not be easier" review of Quickroute 3.0 in Electronics World & Wireless World Jan 95

Quickroute, the *integrated* electronics design solution, available with:

- Schematic capture, net-list import & export, Gerber file import & export, WMF, DXF, SPICE & SpiceAge export.
- Integrated auto-routing on 1, 2 or up to 8 layers. Copper fill for creating regions of copper.
- Engineering change allows changes on a schematic to be propogated forward onto a PCB.
- Prices range from £399.00 down to just £68.00 (prices exclude post&packing, and V.A.T).

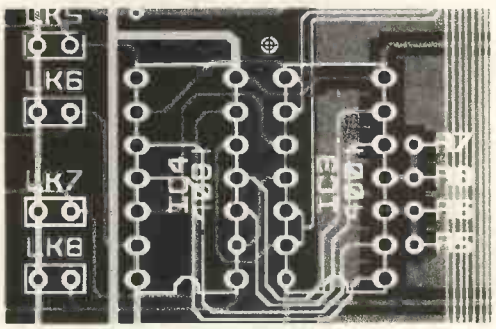

quickroute SYSTEMS Limited
14 Ley Lane, Marple Bridge, Stockport, SK6 5DD. UK.
Tel/Fax 0161 449 7101
email info@quicksys.demon.co.uk

FREE Demo Pack

CIRCLE NO. 104 ON REPLY CARD

TRANSFORMERS FOR BALANCED LINES IN HIGH PERFORMANCE AUDIO SYSTEMS

SOWTER EST. 1941 TRANSFORMERS

E A Sowter Ltd
PO Box 36 IPSWICH IP1 2EL ENGLAND
Tel: +44(1)1473 252794
Fax: +44(1)1473 236188
E-Mail: sowter@tcp.co.uk

Design and Manufacture of all types of Audio Transformer using Nickel and Grain Oriented cores

Free catalogue
Free technical support service
Popular types from stock

CIRCLE NO. 105 ON REPLY CARD

PORTABLE PROGRAMMER & EMULATOR

PROGRAMS EPROMS/FLASH TO 40 PINS WITHOUT ADAPTORS
EMULATES 8 & 16 BIT SYSTEMS

from £465

- 2M ram, expandable to 8M - avoids multiple downloads and programming in blocks.
- Set programming & emulation for 16 bit systems.
- Tactile membrane with individual keys for all major functions.
- Supports sector protect/ unprotect feature on 29F010/040.
- Fast download. 15 seconds for 1M bit Intel file.

its an easy touch for anyone

Ideal for R&D or small volume production. ISO 9002 manufacture and strict use of manufacturers algorithms guarantees reliable programming.

Lloyd Research Ltd.
7 & 7a Brook Lane, Warsash, Southampton, Hampshire SO31 9FH, England.
Tel: +44 (0)1489 574040.
Fax: +44 (0)1489 885853.

CIRCLE NO. 106 ON REPLY CARD

PhoneDay fiasco

Responding to criticisms from BT and Mercury that he is accountable to nobody, Don Cruickshank, director-general of telecomms watchdog agency OFTEL, has belatedly admitted that his decisions would be better made by a committee and in public. This dramatic conversion comes too late, however, to reverse one of his department's biggest mistakes – this year's National Code Change.

Peripheral as this might sound to you, it's not because you paid for it. You and other UK phone users shelled out £3,250 million in return for a change which did not even solve the most urgent problem – the imminent exhaustion of phone numbers in several UK cities (cost estimate courtesy of the Telecommunications Managers Association). Despite Don Cruickshank's proud boasts on television of new numbers which would not change again in our lifetime, the likelihood is that we shall need new ones well before the end of the decade – let alone our lifespan.

According to Oftel's consultative document, Numbering: Choices for the Future, the new code plan is a numbering scheme for the 21st century. Given that the European Telecommunications Office has not yet come to a decision on a pan-European numbering scheme, it would appear that our 1995 plan is already out of date. At this stage it is also difficult to predict the extent of the demand for location-independent numbers occasioned by personal numbering and UPT, the mixed wire-line and radio-based universal personal telecommunications service also known as 'one person, one number'. All these require a total re-think of phone numbering, as will pressures for pan-European number harmonisation.

PhoneDay was a wasted opportunity therefore. Oftel deliberately chose to ignore specialist advice, while refusing to provide statistical information to experts who questioned its machinations. Subsequently the department came up with an even more ill-conceived scheme for adding new codes beginning with 02 and this time reaction was so negative – with operators like BT and Mercury distancing themselves from the plan – that Oftel had to think again. It seems hardly coincidental that the architect of all these hair-brained schemes has been removed from the post of numbering-scheme manager. It is also notable that one of Oftel's officers most responsible for pushing through the code change and who made several statements which have since been proved wrong left for another government department.

Phone users have just cause for grievance with this inelegant arrangement. Londoners have already suffered two code changes since 1990 and it looks highly likely that a third will be necessary well before the decade is out. Even more lamentable is the lack of consultation. For reasons of 'commercial confidentiality', Oftel will not reveal statistics on number distribution and utilisation. The department also refuses to make available numbering allocations inside area code groups, except to network operators, making it impossible to validate its judgements and projections or for large users to plan new facilities.

Don Cruickshank's offer to make Oftel more accountable is welcome but must be scrutinised.

Earlier this year powerful arguments were expressed for delaying the introduction of a new national numbering plan but Oftel took the view that "details of the new numbering scheme cannot be debated indefinitely." Observers contend there was no debate at all and in the absence of an open forum or even a situation where all telecomms industry interests are represented, it is hard to suppress the feeling that Oftel has not served phone users well in manipulating what is a scarce national resource.

There are signs that a change of attitude in Oftel will now produce a more effective régime; this is to be welcomed but it will not recoup the wasted £3 billion.

Don Cruickshank's decisions would be better made by a committee and in public

Back in 1992, the then chairman of TMA, Nick White, expressed the view: "The topic of telephone numbering and code changes does not attract widespread attention but the planned changes are widespread and will hit every customer's pocket. Therefore any changes must be optimised by an expert planning and consultation process to minimise the cost of the changes to the customer and to deliver a solution that will last well into the next century." It is as valid now as it was then. ■

Andrew Emmerson

EDITOR
Martin Eccles
0181 652 3128

EDITORIAL ASSISTANT
Rob Allcock
0181 652 8638

CONSULTANTS
Jonathan Campbell
Philip Darrington
Frank Ogden

DESIGN & PRODUCTION
Alan Kerr

EDITORIAL ADMINISTRATION
Jackie Lowe
0181-652 3614

E-MAIL ORDERS
jackie.lowe@rbp.co.uk

ADVERTISEMENT MANAGER
Richard Napier
0181-652 3620

DISPLAY SALES EXECUTIVE
Malcolm Wells
0181-652 3620

ADVERTISING PRODUCTION
Christina Budd
0181-652 8355

PUBLISHER
Mick Elliott

EDITORIAL FAX
0181-652 8956

CLASSIFIED FAX
0181-652 8956

SUBSCRIPTION HOTLINE
01622 721666
Quote ref INJ

SUBSCRIPTION QUERIES
01444 445566
FAX
0144 4445447

NEWSTRADE DISTRIBUTION
David G. Sanders
0181 652 8171

BACK ISSUES
Available at £2.50

ISSN 0959-8332

REED BUSINESS PUBLISHING

Electronics World + Wireless World is published monthly. By post, current issue £2.25, back issues (if available) £2.50. Orders, payments and general correspondence to **L333, Electronics World + Wireless World, Quadrant House, The Quadrant, Sutton, Surrey SM2 5AS.** Tlx:892984 REED BP G.
Cheques should be made payable to Reed Business Publishing Group.
Newstrade: Distributed by Marketforce (UK) Ltd, 247 Tottenham Court Road London W1P 0AU 0171 261-5108.
Subscriptions: Quadrant Subscription Services, Oakfield House, Perrymount Road, Haywards Heath, Sussex RH16 3DH. Telephone 01444 445566. Please notify change of address. Subscription rates 1 year (normal rate) £30 UK and £43 outside UK.
USA: $52.00 airmail. Reed Business Publishing (USA), Subscriptions office, 205 E. 42nd Street, NY 10117.

Overseas advertising agents: France and Belgium: Pierre Mussard, 18-20 Place de la Madeleine, Paris 75008. United States of America: Ray Barnes, Reed Business Publishing Ltd, 205 E. 42nd Street, NY 10117. Telephone (212) 867-2080. Tlx 23827.
USA mailing agents: Mercury Airfreight International Ltd Inc, 10(b) Englehard Ave, Avenel NJ 07001. 2nd class postage paid at Rahway NJ Postmaster. Send address changes to above.
Printed by BPCC Magazines (Carlisle) Ltd, Newtown Trading Estate, Carlisle. Cumbria, CA2 7NR.
Typeset by Wace Publication Imaging 2-4 Powerscroft Road, Sidcup, Kent DA14 5DT

©Reed Business Publishing Ltd 1995 ISSN 0959 8332

Digital TV a bit nearer

Europe appears to be favouring a digital terrestrial TV scheme based on a 2000 carrier modulation scheme, increasing the likelihood that the UK will meet the challenge of employing a service by late 1997, as proposed by the recent government's white paper.

Last week's meeting of the European Digital Video Broadcasting (DVB) project addressing digital terrestrial television concluded with the setting up of three adhoc groups.

The first group is to produce a document transferring the current 8000 carrier-QAM draft proposal to one based on 2000 carriers. The second group, comprising Deutsche Telekom and NTL, will independently appraise the offshoot 2000 carrier differential amplitude modulation scheme, 2000-DAPSK, while the third will investigate the feasibility of a scalable 2000-8000 system, allowing 8000 carrier transmissions to be decoded by a 2000-QAM receiver.

Bob Anderson, Motorola's consumer segment manager, commenting on the meeting's outcome, said: "In effect, the current Strawman "8000 carrier" specification is no longer favoured. This is excellent news for the UK, allowing a manufactured solution for the end of 1997 timescale." Motorola argues that an 8000 carrier system is too costly and unlikely to be manufactured in time to meet such tight timescales.

Jeff Gledhill, group leader of NTL's digital terrestrial group said: "NTL is happy that the solution is moving towards a 2000 solution. Europe is taking notice of market pressures."

NTL is advocating the 2000-DAPSK solution, which it believes will simplify greatly the complexity of the receiver.

Roy Rubenstein, *Electronics Weekly*

Canada goes for DAB

Europes digital audio broadcasting (DAB) system, based on the Eureka 147 implementation, is a step closer to becoming an internationally adopted standard.

Canada is to adopt the system following the BBC's decision to introduce a DAB service later this year in the Greater London area.

"It is the strongest and probably the most known system," sid John Lee, manager for networks and technology at the Canadian Broadcasting Corporation.

In the meantime the US is testing eight additional systems before it decides on a national standard.

The nine systems provided with Electronic Industries Association (EIA) for testing are AT&T's In-Band/Adjacent-Channel (IBAC), AT&T/Amati Communications Corporation's Inband/On-Channel (IBOC), Eureka 147's DAB system, one AM and two FM implementations of IBOC from USA Digital Radio, and Voice of America/Jet Propulsion Laboratory's new-band/direct-broadcast satellite system.

Eureka 147 uses the coded orthogonal frequency division multiplex modulation technique specifically designed for interference-free reception by portable and mobile receivers.

"Eureka 147 does very well in audio quality and multipath tests. Others don't do well in multipath but do well in audio quality," said one EIA spokesperson.

Although the DAB service is favoured in many countries including Australia, Israel and China, high-volume production of DAB receivers, which should lower prices and sizes, has not begun yet.

Grundig currently manufactures 4000 to 6000 sets per annum, but hopes to increase volumes next year. Receivers are expected to be widely available to consumers by 1997.

Canada will provide a DAB service in the L-band (1452-1492MHz), whilst the UK will use the vhf band (217.5-230MHz).

Svetlana Josifovska, *EW*

Standards delay video disk

The launch of digital video discs – DVDs – is to be delayed following the recent agreement of a common standard by the two opposing alliances led by Toshiba and Sony/Philips respectively.

The Super Density – SD – alliance, led by Toshiba, had originally scheduled the launch of its format for June 1996, but due to necessary design changes, incurred by the newly adopted standard, this launch will be postponed by at least three months.

Nevertheless, DVDs are expected to soon start raising revenues for the consumer electronics industry. The impact will be even greater with the arrival of other consumer electronics systems, such as high-resolution widescreen tvs, audio speakers and amplifiers which will support Dolby *AC3* discrete five-channel soundtracks, that DVDs will spur.

The 'new' DVD format will incorporate the best features from both the Super Density CD and Multimedia CD. It will be a two-side, double-layer CD with a substrate thickness of 0.6mm and capacity of 4.7Gbyte per layer giving 18.8Gbytes per disc. Signal modulation will be based on the efm Plus technique adopted from Multimedia CD technology, and will use Reed-Solomon error correction.

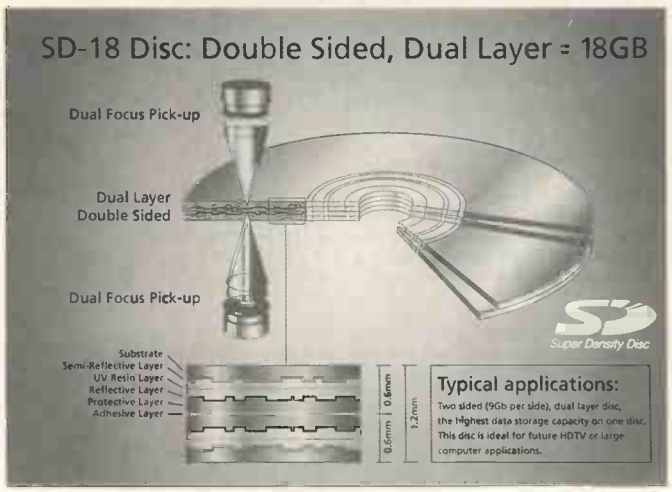

DVD digital video disks will incorporate the best of two standards.

GI wants Pace

Sources close to General Instrument (GI) have confirmed it is targeting UK satellite and cable receiver maker Pace Micro Technology in a takeover bid. Talks are taking place and GI is confident a deal will be struck this week.

GI, which is one of the largest American cable television equipment suppliers, sees an opportunity to capitalise on Pace's strong presence in digital tv decoders. There was no official comment from GI's corporate headquarters in Chicago.

A deal had been expected sooner but the two firms have had difficulties agreeing a price. GI believes Pace leaked details of the talks in a bid to boost the value of the company. Reports indicate the wrangling centres on a price of £120m.

Pace is Europe's biggest satellite receiver maker and has been keen to indicate other potential bidders were involved.

"We've been growing extremely quickly, said a Pace spokesperson. "Business has been growing from strength to strength. As a consequence there have been many rumours. There are always things bubbling around. GI have been talking to us, but no more than that."

The spokesperson added that potentially it could be "a partnership similar to that one with NTL". Pace and National Transcommunications (NTL) officially joined forces in April last year and formed Pace-NTL, an MPEG-2 based digital TV equipment manufacturer.

Earlier this year Pace began volume production of digital TV set-top boxes – the world's first company to do so. The boxes employ the SGS-Thomson Microelectronics MPEG2 chipset. Pace manufactures the boxes at its headquarters in Shipley, Bradford with extra capacity provided by contract manufacturer D2D.

GI has pushed its alternative DigiCipher II digital compression system but has lost out to the MPEG-2 scheme as broadcast standards have been finalised.

Pace started eleven years ago by selling modems from one of the founder's bedrooms.

Last month Pace sold its modem manufacturing business to its management team for £3m. Pace wished to concentrate on its digital TV business although the modem company, Pace Micro Communications continues to operate from the Saltaire site.

Svetlana Josifovska, *EW*

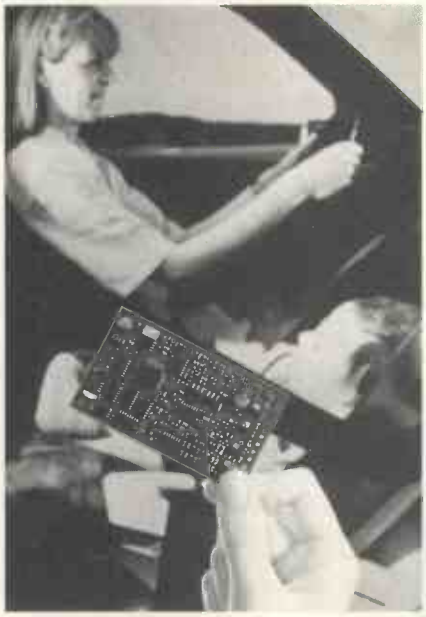

Siemens has produced a new detection system for the front-passenger airbag. It improves the safety of children placed in rear-facing child seats. The system only triggers if a person is sitting in the front passenger seat. If a child seat is mounted on the seat, occupied or not, triggering of the airbag is prevented. Required signals come from a pressure-sensitive force-sensing resistor foil responding to a pressure of 12kg or more.

New light on optical switching

Optical routers with femtosecond switching speeds are the goal of research by Hitachi and Cavendish Laboratories, in Cambridge. The pioneering work uses delayed, short duration, light pulses to improve optical semiconductor switching characteristics by over three orders of magnitude.

Optical switches use light to control the conducting state of the semiconductor material. "This interaction of light creates electrons and holes which exist in the material for up to a nanosecond until recombining naturally," said Dr Jeremy Allam, the project's group leader. It is this duration that limits the switching speed since the material's state cannot be changed until the carriers recombine.

The tack employed by the group is to follow the controlling light pulse with a carefully delayed, second one. This accelerates the overall recombination rate, even though the delayed pulse introduces yet further electrons and holes.

"The idea's novelty is in exploiting the phase of electrons. Electrons and holes remember for some 10ps the oscillations generated by the light field. By synchronising the second light pulse, destructive interference results," said Dr Jeremy Baumberg, a researcher at Hitachi Cambridge Lab.

Applying this technique at 4K (–269°C), up to 70% of the carriers recombine within 100fs. The reason why a percentage of the electrons still remain is unclear.

Dr Baumberg believes that the achieved performance can be demonstrated at 70K. Using quantum dot semiconductor structures, the operating temperature is likely to be pushed up further still. Moreover, by implementing delayed light pulses on a chip's surface, greater robustness to vibration and thermal drift is expected.

Roy Rubenstein, *EW*

Three-fold increase in optical switching speed – bringing switching capability to femtosecond levels – could be possible thanks to research by Hitachi and Cavendish Laboratories.

2.5THz receiver is a stage nearer commercial application

A team at the Rutherford Appleton Laboratories claims to have made the first waveguide based radio receiver to work at 2.5THz. Other receivers have been made that work at this frequency but these have been based on less robust structures that do not have well defined directional characteristics.

The receiver is based around a Schottky diode mixer and a tiny horn antenna which are connected by a waveguide only 100μm wide by 25μm high.

The horn and waveguide are made by electro-forming. Fabrication begins with a 'former' that is machined to be the same shape as the desired interior of the horn and waveguide.

This is thickly electroplated, then the former is dissolved leaving the complete electroformed antenna.

The finished assembly is 3mm long and is held above the chip containing the Schottky diode.

A far-infrared laser is used as a local oscillator for the receiver. The laser output is directed onto the diode which mixes the optical and incident Radio-frequency energy down to more 'conventional' frequencies.

The receiver is not just a scientific curiosity. It has been developed to detect decimillimetric radiation from molecules in the atmosphere as a way of assessing pollution levels and ozone depletion.

Another mixer, based on a superconducting tunnel junction, can be used to raise the signal to noise ratio at the expense of a 1THz maximum frequency.

Mobile phone chip-count reduced

At the moment, three ICs is the minimum for a GSM 'phone chip set. Next year, it will be down to two.

Analog Devices will introduce one of the most highly integrated GSM mobile phone designs next year with the appearance of its two-chip baseband chipset.

The company is currently selling the *AD20msp410* three-chip GSM baseband design, but-according to Jurgen Krogh, marketing director for wireless communications products, a two-chip design will be introduced in the first quarter of 1996.

"Within four to five months the 410 design will move to two chips," said Krogh. The new chipset, to be called the *AD20msp415*, will include the *AD7015* baseband codec from the *410* chipset, and the speech and channel coders, as well as channel equaliser and *H8* microcontroller.

In addition, Krogh said that Analog would have a two-device rf front end design which will be suitable for both 1.8GHz and 1.9GHz frequency rates.

Analog, which has developed a full software and hardware GSM reference model with UK developer the Technology Partnership, intends to support the proposed enhanced full rate speech coder design when approved by ETSI possibly next month.

Krogh, who believes that Nokia's EFR proposal is the favoured design, admitted there would be a small premium on enhanced rate designs which improve speech quality, largely due to increased memory requirements.

Quieter digital cellular

Mobile phone technolgy developer Qualcomm has demonstrated a low noise rf front end for its CDMA digital cellular system using superconducting cryoelectronic technology.

The Californian pioneer of the CDMA – code division multiple access – radio protocol, which is competing with GSM-based systems in the US digital cellular market, used a cryoelectronic rf circuit developed by Superconducting Core Technologies (SCT) in a 2GHz PCS radio test. The company claims a 6dB improvement in the rf circuit noise figure.

Qualcomm used Colarado based SCT's refrigerated cryoelectronic radio circuits in a basestation receiver which included narrowband, multipole filters made from superconducting materials, and a cryogenically-cooled low-noise input amplifier. High temperature superconducting circuits work above the 77K boiling point of nitrogen and so each basestation required its own refrigeration compressor.

The CDMA spread spectrum digital radio system relies on the sensitivity of the receiver much more than TDMA-based GSM systems. Because the CDMA radio signal is spread across the entire frequency band and not confined to narrow radio channels, it can be close to the noise floor of the receiver.

A 6dB improvement in the sensitivity of the basestation receiver, according to Qualcomm, will improve system performance in the presence of interference from reflected signals. Qualcomm, which is obviously aware of the competitive situation in the US digital cellular phone market, claimed that noise performance improvement could ultimately reduce the number of basestations required in PCS networks by up to 50 per cent.

Richard Wilson, *Electronics Weekly*

UK semi billings up...

UK semiconductor billings in August were significantly above the seasonal average and new orders also hit a record high in July for the first time, according to the FEI's Semiconductor Manufacturers' Association.

There has now been a prolonged period in which demand has exceeded supply," said FEI statistician Malcolm House. "At present, this very strong demand cannot be satisfied due to capacity limitations." The provisional book-to-bill ratio for August was 0.84 in the UK and 0.95 in the UK and Eire.

For the year to date the book to bill ratio for the UK and Eire is 1.25 compared to 1.12 for the sane period last year. New orders are 46% above and billings 32% up on last year's level. "Strong growth will continue into 1996," added House.

...while US billings are down

The Semiconductor Industry Association's barometer of the health of the chip industry, the book-to-bill ratio, fell in August but demand for semiconductors still remains high.

The August book-to-bill ratio was 1.18 compared with 1.23 in July. The SIA said that US chip makers shipped $3.88bn worth of chips in August compared with $3.78bn in July and $2.8bn for the same period last year.

New orders dropped by 1.3% in August to $4.5bn compared with July orders of $4.64bn. While the book-to-bill ratio was slightly down in August, the SIA says that chip demand remains high.

Record demand for chips has led to shortages, especially in pc related areas, which are not expected to ease until the first quarter next year.

OLSON®

For all your Power Distribution Olson offer a varied choice

OLSON® **ELECTRONICS LIMITED**

FOUNTAYNE HOUSE, FOUNTAYNE RD., LONDON N15 4QL
TEL: 0181-885 2884 FAX: 0181-885 2496

CIRCLE NO. 107 ON REPLY CARD

911

RESEARCH NOTES

Jonathan Campbell

Sucking life into control technology

Better pumps and improved motor control systems for robots are the goals of research at Georgia Institute of Technology and Emory University – from work being carried out into leeches.

Neuromorphic analogue vlsi circuits – circuits based on biological systems – that model the circulatory and swimming neurosystems of the leech have already been built. Previously, most neurosystem modelling with analogue vlsi has been in the area of sensory systems – for example, visual processing in the retina or auditory processing in the cochlea.

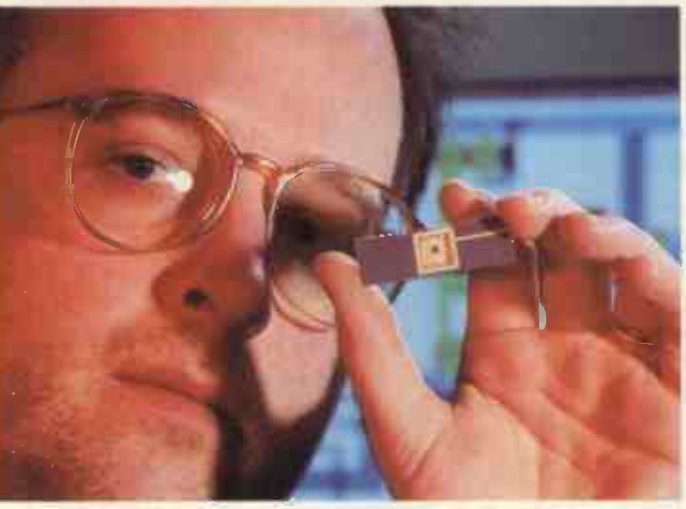

Leech fixation. Steve DeWeerth of the GeorgiaTech School of Electrical and Computer Engineering displays a VLSI chip that contains one segment of the leech system

But little has been done with vlsi in modelling motor systems. Similarly, although many mathematicians and biologists are studying biological motor systems, few research groups are doing circuit modelling of them.

The Georgia and Emory workers picked on the leech because its swimming and circulatory control systems contain a fairly large but manageable number of neurons. This is important if researchers are to depict behaviour on both the cell and system levels, in real time.

The neurons are also part of reasonably regular, repetitive structures. The circuitry and connections in each segment are almost identical to those found in every other segment. Motor systems of the leech are also well known.

The leech's movement is itself quite interesting. Each of 20 segments in the animal houses motor controllers for swimming, and the controllers work together to cause the leech body to move. The kind of oscillation they induce produces a constant phase lag.

"If you think of the position of the body as big sine wave, each stage is a little bit out of phase of the one behind it. It's just like a wave moving down the body," says Steve DeWeerth, assistant professor in the School of Electrical and Computer Engineering at GeorgiaTech.

When leeches move faster, they keep the same phase, they just increase the frequency.

So far circuit models of the leech's circulatory and swimming neurosystems have been built, and have been linked together using simple oscillators – not of course exact replicas of the neurosystems involved.

The problem here is that modelling biological motor systems on both the cell and system levels, as DeWeerth is doing, is constrained by the large amounts of hardware and computer time required, and there is currently no hope of running the simulation in real time.

"The challenge is to build the entire system and get it to work – and better yet, get it working in real time," says DeWeerth

The researchers are designing the integrated circuits they need based on their knowledge of the two neurological systems, having the chips fabricated, and then assembling and testing them.

Individual segments have already been modelled and the team is now designing the chips that will connect these segments.

Future goals include incorporating the electrical systems into a larger one that includes sensor feedback and adaptation.

Solar drive will take Nasa into deep space ...

Launch of a small Nasa spacecraft destined for a fly-by of an asteroid and a comet in 1998 will be the first to rely on solar electric propulsion for its main source of thrust, rather than conventional solid or liquid propellant-based systems.

Propulsion-related technology for the mission is currently under development by two separate programs run by Nasa and the US Air Force Ballistic Missile Defense Organization.

Thrust during the mission will be generated by one 300mm diameter 'ion-drive' thruster, which expels from the spacecraft a high-velocity beam of xenon gas that has been ionised using the electricity produced by solar arrays.

Ion-drive systems should be much more efficient than chemical propulsion systems, which typically require two or more chemical propellants for fuel and oxidiser.

Smaller versions of such thrusters have been used occasionally on Earth-orbiting satellites for adjusting spacecraft attitude or executing small orbit changes, but no space vehicle has yet employed solar electric propulsion as its primary means of thrust.

The idea has actually been around for some time, and the dramatic benefits of ion propulsion for a wide variety of deep space missions have been appreciated. But Nasa science mission managers have never felt that the technology was mature enough to be used.

But the 1998 craft, part of the New

Millennium programme – will bring full-scale solar electric propulsion out of the lab and into space – once and for all.

The craft is also expected to test a variety of advanced technologies that may find their way onto ambitious deep space and Earth-orbiting missions planned by Nasa for next century.

For example, a miniaturised deep space antenna and related telecommunications equipment, advanced solar arrays and lithium ion spacecraft batteries, and low-mass spacecraft structures.

The instrument pay-load will include a miniaturised imaging spectrometer that will make chemical maps of the target asteroid and comet. New mission operations techniques are promised to give the spacecraft independent decision-making abilities – unprecedented for such a deep space mission.

"These technologies represent significant leaps over the existing state of the art for deep space vehicles," says Kane Casani, New Millennium programme manager at the Jet Propulsion Laboratory. "We'll have a very capable yet very advanced flight computer as well as a prototype multispectral science instrument that is at most a tenth of the mass of similar instruments on the Voyager probes. The autonomous navigation capabilities will deliver performance equivalent to sailing a ship across the Atlantic Ocean hands-free while arriving at the port in Europe a few steps away from the dock."

Depending on the launch date, the primary asteroid and comet fly-by mission is expected to last 12 to 18 months.

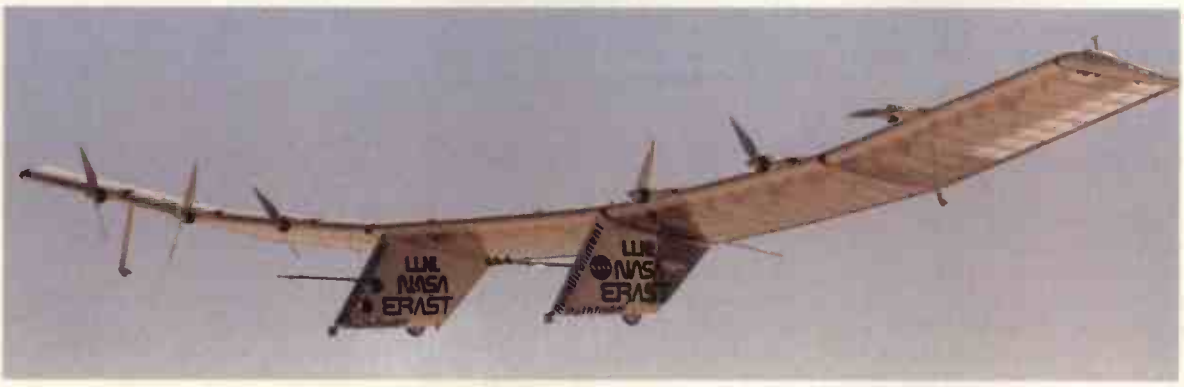

...And up into the clouds:

A Nasa pilotless, remotely-controlled aircraft, using the Sun's energy to fly to stratospheric altitudes, has achieved a milestone flight demonstration that could lead to better understanding of the upper atmosphere – and the effect of greenhouse gases on Earth's environment.

Pathfinder is one of several pilotless prototype research vehicles under study by Nasa, and the flight at Nasa's Dryden Flight Research Center was the first in a series of high altitude tests of the solar-powered aircraft, developed by AeroVironment.

During the near 12-hour mission, Pathfinder – controlled from a ground station – reached an altitude of 2385m, a new record for a solar-powered aircraft.

The all-wing aircraft, weighing less than 270kg, is being evaluated by a Nasa-industry alliance in a programme to develop technologies necessary to operate pilotless aircraft at altitudes of up to 4700m on environmental sampling missions lasting up to a week or more. Previous holder of the solar aircraft record of 660m was the Solar Challenger, also built by AeroVironment Inc. The company also developed the human-powered Gossamer Condor and Gossamer Albatross lightweight aircraft.

From Albert Hall to Albert Terrace

How would you like to experience your favourite music, at home, as though you were sitting in one of the best seats at the Royal Albert Hall. Or perhaps you'd like to travel a little further. How about putting your feet up at Carnegie Hall?

Such a venue choice could soon be possible if the work being carried out by Ducksoo Lee in the Image & Media Lab at LG Electronics, and Koengmo Sung, at the Department of Electronics Engineering at Seoul National University is taken up.

The two researchers have developed a sound field processor system designed to create the aural impression of a concert hall at home, using normal recording tapes or cds. Listening tests are reported to show an increased spatial awareness with the created sound – generally preferred to the original sound.

Researchers have experimented before with adding concert hall data into recordings but these have been limited by specialist hardware required. Other approaches have been to create reflections by placing a number of loudspeakers in the room. But most of the sound processing systems of this kind are based on single-point source models to create the reflections.

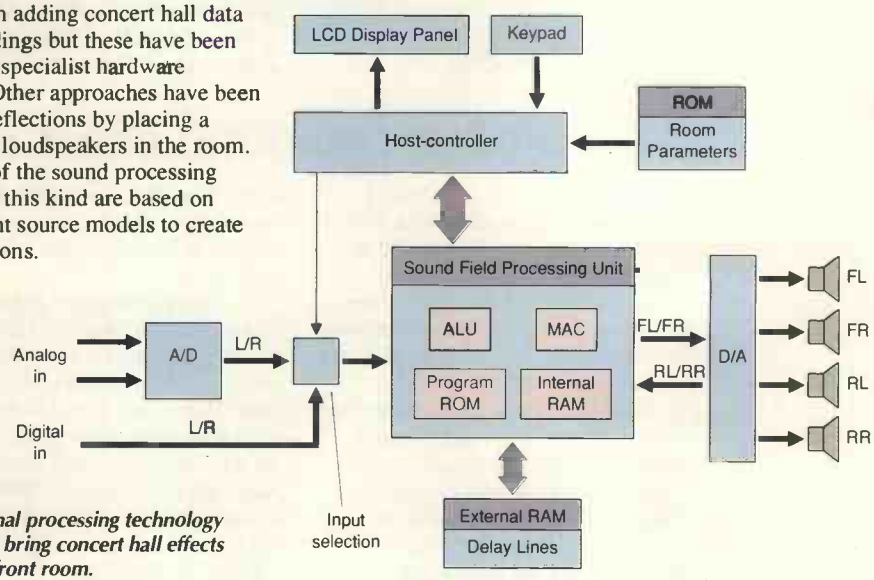

Digital signal processing technology needed to bring concert hall effects into your front room.

Lee and Sung propose ('Sound Field Processor for Creating Virtual Concert Hall Impression in the Home,' *IEEE Transactions on Consumer Electronics*, Vol 41, No 2, pp.273-281) an enhanced sound field processor system that makes optimal use of the two channel information contained in conventional stereo recordings, in a four-speaker system.

Firstly, they obtained the reflection data of a real concert hall by ray tracing simulation with two sound sources to create the reflections originating from the left and right channel.

These data are then processed as 'panning' information, which will act to give the impression of the image source moving from speaker to speaker.

A digitally processed sound field processing unit creates the reflections and reverberation signal from the two channel input signal.

Left and right input signals, digitised with a sampling frequency of 44.1kHz, are stored separately in the delay lines, then multiplied by gain coefficients to build up the sound, sample by sample. Panning signals from the front left/right channels are mixed with the direct sound, while only panned information is routed to the rear channels.

In the current system, the coefficients of several concert halls are stored, while room parameters such as initial time delay, size of hall and 'liveness' can be changed to alter the listening effect.

Obviously painstaking fine-tuning by a listener is still necessary to get that perfect concert hall effect in the front living room. But at least the drinks are cheaper...

Optical gyro puts motorists on the map

Global positioning satellite technology, as the basis for navigation systems, is pretty popular at the moment. Unfortunately, for navigating a car, gps has certain serious shortcomings – it suffers signal blocking due to tall buildings, and its location results are really too noisy to identify a street.

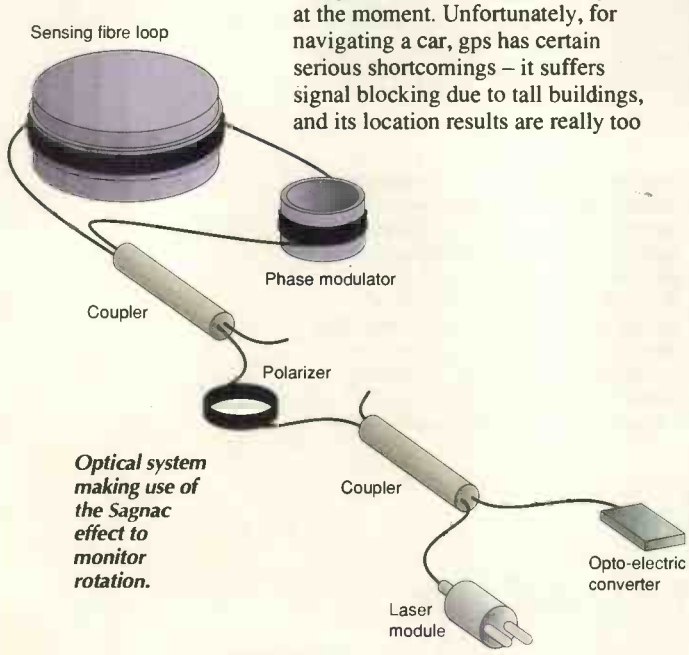

Optical system making use of the Sagnac effect to monitor rotation.

But three Japanese researchers at Hitachi have demonstrated a practical automotive navigation system using a prototype optical gyroscope in combination with a map-matching algorithm, that offers a practical alternative to gps. It also addresses many of the problems associated with current gyroscope navigation. In particular, the researchers say electronics have been used to restrict the resolution and bias error of the gyroscope, while a microcomputer can compensate for the scale error due to the optics.

Basis of the system is the fibre ring interferometer. Laser light is split into two beams by the coupler then launched into the 300m fibre loop (10cm in dia) from different fibre ends so as to propagate in different directions. After circulating in the fibre loop, the two beams combine into an interference beam. According to the Sagnac effect, the two beams experience a different phase shift when the system is rotating, so a rotation-dependent change results in the interference pattern.

In a test, the researchers were able to show ("Optical Fiber Gyroscope for Automotive Navigation", *IEEE Transactions on Vehicular Technology*, Vol 44, No , pp.698-705) that a car containing the system could successfully track itself on a digitally-stored map. Run length was measured by a conventional speedometer and heading information was obtained from the gyro, constantly adjusted by the system so that the car's position matched up with a stored digital map.

A crucial test of the system was when the car turned into an area not detailed on the chart, effectively disappearing from the screen and being totally dependent on its sensors. The Hitachi team reports that when the vehicle did eventually turn into a mapped area, it once again appeared back on the map in precisely the right position.

Mag-lev has profound effect on chips

Magnetic levitation technology, developed by MIT in the US, is being used to increase precision in integrated circuit production.

The mag-lev technique, developed by David Trumper of the Department of Mechanical Engineering, offers the promise of extremely fast and accurate frictionless positioning of the silicon wafers on which integrated circuit chips are fabricated.

MIT has licensed the process to Integrated Solutions Inc (ISI), a developer of ultra-precise machines for semiconductor production, where it will be used in the design and manufacture of ISI's wafer stepper tool for printing integrated circuit patterns.

ISI engineers say they expect to be able to position stepper stages, on which wafers are photographically imaged, with accuracy measured at better than 10nm. Mag-lev technology will be used to replace the current fine set stage and long travel stages of a wafer stepper, capable of 200mm of travel, according to Larry Thomson of Integrated solutions.

The MIT technology developments will be incorporated with a recently announced Crada (cooperative research and development agreement) for ISI to share mag-lev technology research results with Sandia National Laboratories.

Thomson says he has: "no doubt that this new mag-lev precision measurement and motion technology will have a profound effect on next generation semiconductor production equipment, such as wafer steppers, already under development. ■

ANCHOR SURPLUS Ltd

The Cattle Market Depot
Nottingham NG2 3GY. UK

Tele: +44 (0115) 986 4902/
+44 (0115) 986 4041 24hr answerphone
Fax: +44 (0115) 986 4667

ANCHOR SURPLUS Ltd

HP 3582A DYNAMIC SPECTRUM ANALYSERS
0.02Hz-25.6Hz with 0.02Hz Resolution
Twin Channel Dynamic with Transfer & Coherence
Digital Averaging. On Screen Readout & Prompts
IEEE 488 option fitted
£1495

HP 14IT +8552B+8555A SPECTRUM ANALYSERS
10Mhz to 18Ghz with 100Hz-300Khz Bandwidth
2Khz-200Mhz pr cm Scan. Storage Facility
Now back in stock in quantities large enough
for us to advertise
£1100

HP 3325A SYNTHESISED FUNCTION GENERATORS
1uHz-21Mhz (to 61Mhz on Aux O/P) Sweep Facility
1mV to 10V into 50ohm Output in 0.01db steps
Sine Square. Triangle Ramp Functions
Variable Phase Output. Fully Programmable. HB-IB fitted
£1100

HP 8445B AUTOMATIC TRACKING PRE-SELECTORS
For use with the above 14IT Analyser system
DC-18GHz. No Cables hence only
£250

ROHDE & SCHWARZ APN-62
Precision Low Frequency Signal Generators. AS NEW. 1Hz to 260Khz with 1Hz Resolution
Balanced and Un-Balanced Outputs. Sine-Square-Sawtooth Functions
Output level fully adjustable 100uV to 20V in 0.1db steps
Frequency Sweep function 1mS to 65secs. Level Sweep 2mS to 65secs. IEEE 488 Fitted
£995

PHILIPS 8927 LINE VIDEO CORRECTORS
Complete Video Correctors with 5 preset
frequency controls. LF MF HF1 HF2 HF3
and overall Gain. Balanced and Un-Balanced
75 Ohm Video Output
£175

SORENSEN DCR 150-12B
Regulated Power Supply, 0-150V at 0-12A Output
Twin LCD Meters Constant Volts or Current
£225

CIRRUS CRL254 & CRL 511D
Integrating Sound Level Meter
and Acoustic Calibrator
SPL, LEQ, dbC, dbA
with Case and Books
£175

AMBAC MV2 MERCURY VAPOR SNIFFER
Hand Held Mercury Sniffer with two ranges
0-2 and 0-10mg/cubic metre
With Book Case and Battery Charger (110V)
£125

MEGGER 9A INSULATION TESTERS
Insulation. Continuity. Audio Bleep
Hand Held. Fully Transistorised Cased
500V or 1000V Output
500V £65 1000V £75

MEGGER BR4 BRIDGE TEST SETS
250V Test Voltage with 0-500Mohm Range
Bridge, Varley, Murray Loop Test
£75

FDB RCB TEST SETS
For Testing RCB's to BS 4293
120V/240V. 100mS/1sec test time
3mA to 1Amp trip Current
£85

NEC VISI-GRAPH OSCILLOGRAPH
9 Channel Optical Recorder. 10mV-10V/cm
with 10cm/min to 400cm/sec chart speed
Event Marker and Reference Grid. As New
£450

GOULD OS4000 DIGITAL STORAGE SCOPES
DC to 10Mhz Band-width (typ usable to 35Mhz)
with 18Mhz digital sample rate giving a usable
Digital 'Bandwidth' of 450Khz 1uS to 20secs timebase
Twin Trace. Roll and Pre-Trigger
Special Offer £235 for One Month Only

FLUKE 77 LCD DIGITAL MULTIMETERS
Last few available. THE Standard Hand Held LCD
MultiMeter. Supplied Fully Tested and Calibration. Verified complete with Carry Case and Protective 'Bumper'
Holder for Belt mounting or Bench use.
Supplied with Leads and Probes
Only £75

ALSO FLUKE 80TK Digital Thermometer
add-ons for the 77 C and F K type probe
Only £50

OPEN SEVEN DAYS A WEEK
Mon-Fri 9am-6pm Sat 8am-4pm Sun 10am-4pm
NO APPOINTMENTS NEEDED. CALLERS ALWAYS WELCOME
All Prices are Ex VAT & Carriage
All items are Fully Tested with Verified Calibration
and carry our Unique 30 Day Un-Conditional Warranty

Access VISA

PROTEUS

NEW!
ARES III PCB Design now offers:- Polygonal (shape based) Ground Planes, 32 Bit Hi-precision database, Any Angle Rotate, Extra Layers for mechanical data, DXF Import, Padstacks and Enhanced track editing.

The Complete Electronics Design System

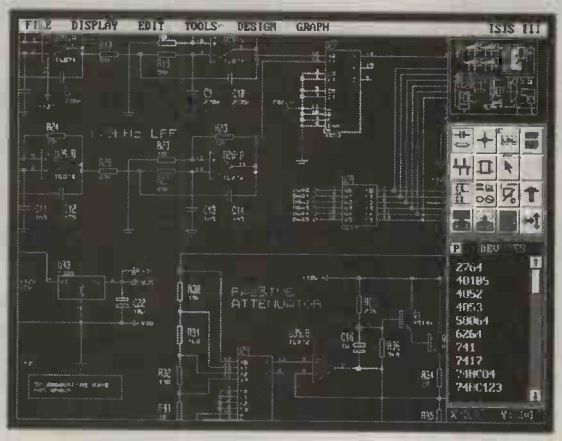

Schematic Capture

- Easy to Use Graphical Interface.
- Netlist, Parts List & ERC reports.
- Hierarchical Design.
- Extensive component/model libraries.
- Advanced Property Management.
- Seamless integration with simulation and PCB design.

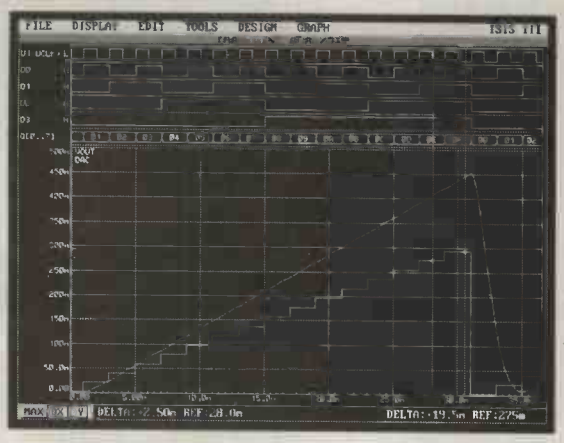

Simulation

- Non-Linear & Linear Analogue Simulation.
- Event driven Digital Simulation with modelling language.
- Partitioned simulation of large designs with multiple analogue & digital sections.
- Graphs displayed directly on the schematic.

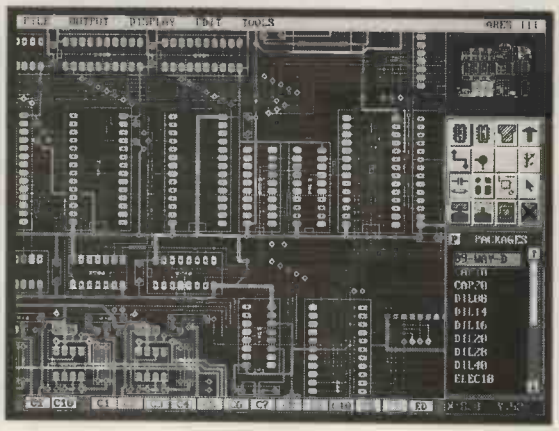

PCB Design

- Unlimited Design Capacity.
- Multi-Layer and SMT support.
- Full DRC and Connectivity Checking.
- Advanced Multi-Strategy Autorouting.
- Output to printers, plotters, Postscript, Gerber, DXF and DTP bitmaps.
- Gerber View and Import capability.

Labcenter Electronics

Write, phone or fax for your free demo disk, or ask about our full evaluation kit.
Tel: 01756 753440. Fax: 01756 752857.
53-55 Main St, Grassington. BD23 5AA.

Proteus software is for PC 386 compatibles and runs under MS-DOS. Prices start from £475 ex VAT; full system costs £1495. Call for information about our budget, educational & Windows products. All manufacturers' trademarks acknowledged.

916

CIRCLE NO. 108 ON REPLY CARD

Managing power

Dave Brotton and Dave Bradbury look at the design and application of energy-efficient power ICs.

What are some of the most important considerations for today's modern systems? How efficient and how small can I make my product? This is particularly relevant to many battery powered systems.

While most IC manufacturers concentrate on ever more complex products the important area of power management is often overlooked. Advances in product requirements, for example, portable equipment such as mobile phones, demand smaller components which consume less power and extend battery life as much as possible.

Extending battery life

For power-sensitive applications, device quiescent current is important. Industry standard regulators – the *LM78L* and *LM431* – commonly feature quiescent currents of 2mA and 400μA respectively. We have designed equivalents featuring quiescent currents of only 350μA and 35μA – representing a potential power saving of up to 11 times.

Elements of the *ZR78L*

Circuit design of the *ZR78L* three-terminal regulator, **Fig. 1**, is based on a bandgap reference, $Tr_{1\text{-}5}$, which forms the core of the regulator. Closing the feedback loop around the reference is amplifier $Tr_{6\text{-}9}$.

Output voltage of the regulator is programmed by tapping off from a resistor chain $R_{8\text{-}13}$. The value of this resistor was chosen as high as possible to assist minimising the quiescent current of the circuit. The remainder of the device quiescent current is defined by the bias generator Tr_{11} to Tr_{15} which has been set as low as possible.

An important feature of the circuit is that its current is almost entirely determined by a V_{BE} and a resistor. This means that it is largely independent of supply voltage leading to exceptional voltage regulation.

The final part of the circuit is formed by transistors $Tr_{16\text{-}18}$ which operate as a thermal shutdown for the device. We find this device out-performs the typical competition in almost

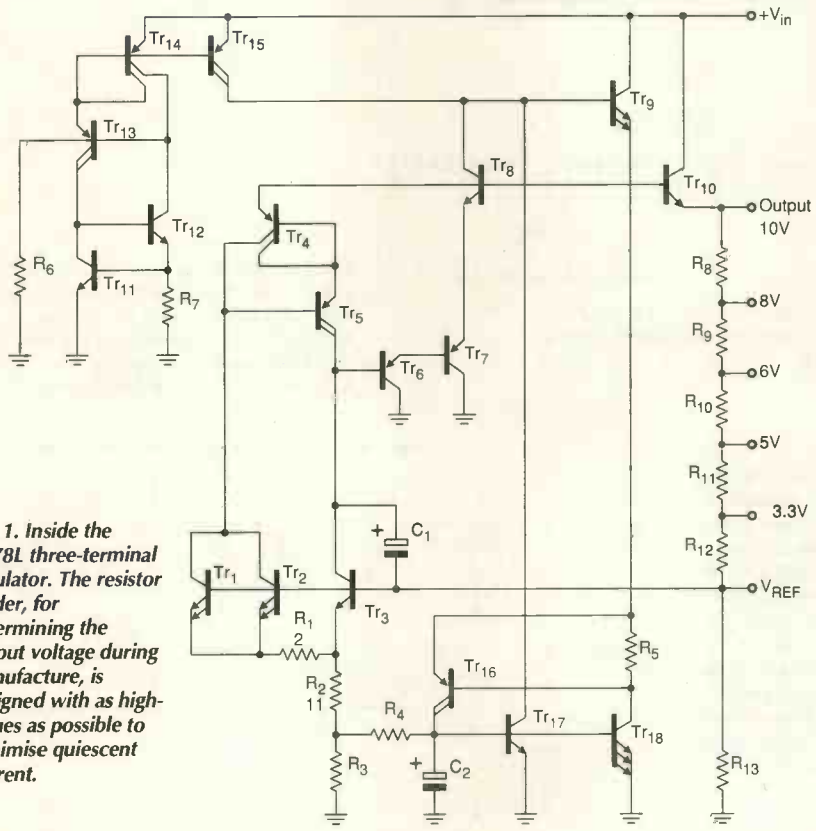

Fig. 1. Inside the ZR78L three-terminal regulator. The resistor ladder, for determining the output voltage during manufacture, is designed with as high-values as possible to minimise quiescent current.

Dave Brotton and Dave Bradbury are with Zetex

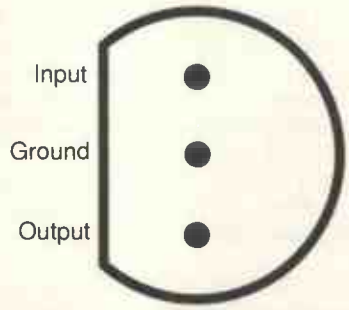

Fig. 2. Pinout of the ZR78L05C three-terminal, 5V regulator.

every respect – most notably the quiescent currnt is six times lower, despite the fact that the device is able to deliver twice the load current, up to 200mA.

In **Fig. 2**, you will see the pinout for the 5V *ZR78L05C*, while **Table 1** shows the device's specification.

Applying the *ZR78L* regulator

ZR78L05 – A particular feature of the Zetex version of the popular 78L series regulator is its low quiescent current, I_q. At only 600µA max – 350µA typical – it is 5-11 times lower than competitive devices. Whilst always desirable for battery powered circuits, low quiescent current is particularly important when the regulator is used in the following circuits. **Figure 3** shows the *ZR78L05* providing a 7.2V source for battery charging applications. Normal 5V output of the regulator is boosted by using a potential divider comprising R_1 and R_2 to raise the ground reference of the regulator by 2.2V. The maximum value that can be used for R_2 is controlled by the quiescent current of the regulator. Resistor R_2 is chosen so this current has an insignificant effect on the voltage dropped across it. Hence, the lower the quiescent current, the lower the current needed in this divider chain.

Omitting R_2 giving the circuit of **Fig. 4** allows the *ZR78L05* to be used as a precision current source. The output current provided by the circuit is given by $(5/R_1)+I_q$. Low quiescent current of the regulator allows this circuit to be used down to much lower currents than normal before accuracy is degraded by I_q.

Other regulators in the family

We based the *ZR431* on the design of one of our standard voltage references, described in *EW+WW* December 1992. The circuit core is based on a bandgap cell used in all Zetex *ZRA*, *B* and *C* reference designs. This circuit gives exceptional performance with temperature coefficients as low as 15ppm/°C and, importantly for power considerations, working currents from as low as 15µA.

The generic 431 is the mainstay reference for the switch-mode power industry and so is manufactured in immense volumes. Consequently the device is one of the lowest cost bandgap regulators available.

Despite this the *ZR431* is a high specification device featuring a quiescent current of below 50µA, a slope resistance of less than 0.75Ω and a temperature coefficient under 55ppm/°C.

The part is basically a 2.5V voltage regulator manufactured with its voltage reference sense input connected to a separate pin. By wiring an external potential divider to this pin, the reference can be multiplied to give a shunt regulator of any voltage from 2.5V up to 20V. Input current of the reference is only 120nA so resistors used in the divider chain can be very high value. The device is configured in **Fig. 5**.

The 431 regulator is commonly used in the feedback loop of isolated switch-mode power supplies as shown in **Fig. 6**. Here the cathode

Table 1. Key specifications of the *ZR78L05C*

Absolute maximum ratings

Input voltage		20V
Package power dissipation	TO92	0.6W
Output current I_o		200mA
Operating temperature		–55 to 125°C
Storage temperature		–65 to 150°C

Electrical characteristics

Test conditions, unless otherwie stated, T_j is 25°C, I_o is 100mA,and V_{in} is 9V

Symbol	parameter	conditions	min.	typ.	max.	units
V_o	output voltage		4.875	5	5.125	V
		I_o=1 to 200mA, T_j=55 to 125°C	4.8		5.2	V
		V_{in}=7 to 20V, I_o=1 to 100mA, T_j=55 to 125°C	4.8		5.2	V
ΔV_o	line regulation	V_{in}=7 to 20V		10	40	mV
ΔV_o	load regulation	I_o=1 to 200mA		5	25	mV
		I_o=1 to 100mA		2		mV
I_a	quiescent current	T_j=55 to 125°C		350	600	µA
ΔI_a	quiescent current change	I_o=1 to 200mA			50	µA
		V_{in}=7 to 20V			100	µA
V_n	output noise voltage	f=10Hz to 10kHz		75		µV rms
$\Delta V_{in}/\Delta V_o$	ripple rejection	V_{in}=8 to 18V, f=120Hz	48	62		dB
V_{in}	input voltage required to maintain regulation		7	6.7		V
$\Delta V_o/\Delta T$	average temperature coefficient of V_o	I_o=5.0mA, T_j=–55 to 125°C		0.1		mV/°C

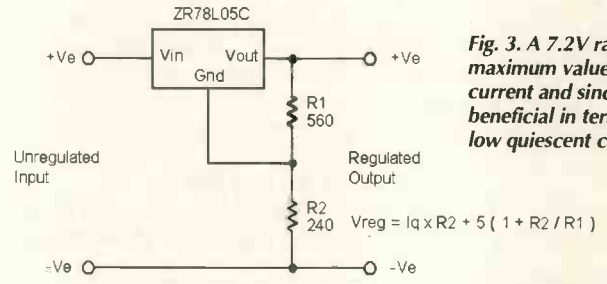

Fig. 3. A 7.2V rail from a 5V regulator. Since the maximum value for R_2 is governed by quiescent current and since a high value for R_2 is beneficial in terms of batery drain, a device with low quiescent current is desirable.

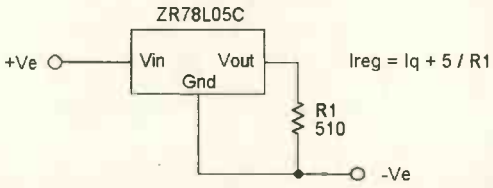

Fig. 4. Removing Fig. 1's resistor to ground produces a precision current source.

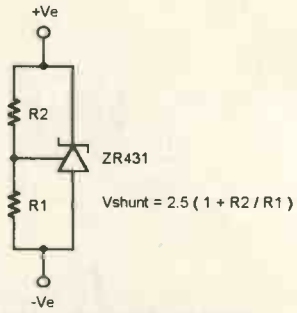

Fig. 5. In battery applications, where the generic 431 three-terminal shunt regulator may consume too much power, this high-performance alternative is useful. Its quiescent current is 50µA and the reference input current just 120mA.

Fig. 6. The 431 shunt regulator is often used in the feedback loop of a switch-mode power supply. In this circuit, the device is not wired directly to the sense divider. The device drives the led of an opto-isolator

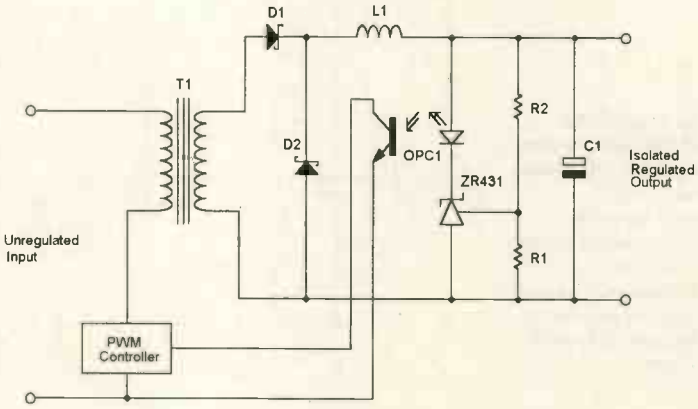

pin of the device is not directly wired to the sense divider. Instead it has the led of an optocoupler in series which feeds error signals to the pulse width modulator of the power supply across the isolation barrier.

There are occasions when a reference with a large and closely defined temperature coefficients are required. It is vitally important that the specified terminal voltage of sealed lead-acid batteries is not exceeded during charging but ensuring this can be difficult due to large temperature dependence of the batteries voltage. By adding diodes with a known temperature coefficient to the reference input circuit of the *ZR431*, a reference with the same coefficients as the lead-acid batteries can be produced. **Figure.** 7 shows a 6.9V reference which has a temperature coefficient of –11.7mV/°C, matching a three cell lead-acid battery pack terminal voltage temperature.

Saving space

Mechanical constraints in battery applications often mean that the circuits used should be as compact as possible. Traditionally, the *ZR431* has been provided in a through hole TO92 package, however space saving requirements today are driving manufacturers to surface mount packages.

The commonest surface mount package for the industy standard *LM431* has been SO8. Zetex part is available in the SOT23 package, which at just 3mm by 1.5mm offers a 75% saving in pcb space when compared to the alternative SO8. Not only that but just three connections are required to assemble the device onto the board.

Another feature of Zetex surface mount pakaging capability comes into account where high dissipation may be expected but space saving is still important. Typically the *LM78L* standard devices have been made available for surface mount appliations in the SO8 package. Thermal contraints for this package often limit the dissipation of the competitive parts. Zetex *ZR78L* series surface mount regulators can utilise the SOT223, 7mm by 4mm package, to attain dissipation up to 2W perhaps three times the SO8 alternatives. This means you can use the regulators up to their 200mA load current limit with a wider range of input voltages not supported by alternative products.

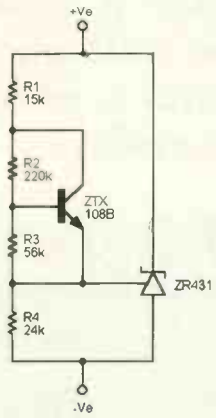

Fig. 7. When charging a lead-acid cell, terminal voltage must not be exceeded. This circuit tracks the large change in terminal with temperature..

Inside the low-drop-out regulator

Critical to performance in this type of regulator is the pass device. Traditional linear regulators use an npn pass element – usually a darlington – to provide drive current. This results in an input to output voltage differential in the region 1.5 to 2V. Such a high voltage drop, at the level of drive current required, results in high dissipation.

Replacing the pass element with a pnp transistor reduces dropout voltage to the saturation voltage of the output device so greatly reducing the wasted dissipation in the regulator. Typically integated output pnp devices have given poor saturation voltages with hundreds of milliamps load current. In addition, relatively poor beta has resulted in high base current drive requirement and so high quiescent current.

In the configuration below, output device Tr_{15} features very low saturation voltage – only 35mV at 100mA. The pass transistor also has a high beta, contributing minimally to the device total quiescent current of 600μA.

The basic regulator circuit comprises a bandgap cell similar to that used in the *ZR78L* regulator. It provides the base current drive to the pnp pass device. The loop is closed by the divider resistor $R_{11,12}$ to enable voltage programming of the circuit during manufacture. A battery low indicator is provided through a sense circuit. It indicates a potential error, at Tr_{10}, should the supply voltage fall to within 300mV of the defined output voltage. A shutdown feature turns off the main bias circuit and reduces quiescent current to typically only 16μA.

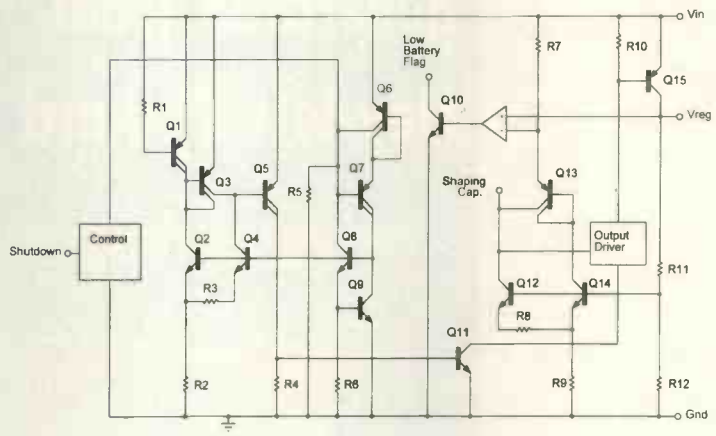

Low drop-out voltage

Extension of battery life is all important to users of battery powered equipment. Of course quiescent current in the power management circuit is important here, but another consideration comes into play.

As a battery runs down, so its output voltage falls. To ensure that the equipment continues to function as long as possible demands the battery regulator has the lowest possible dropout voltage.

Dropout voltage is the minimum input to output voltage differential required to maintain regulation. Our design approach produces regulators with exceptionally low dropout voltage – down to 35mV with 100mA load current.

High-performance, low drop-out

The Zetex low-drop-out device can be remotely shut down under direct low-power logic control. It also includes a low supply warning flag which goes valid when voltage across the regulator falls to below 300mV. At this differential voltage, the *ZLDO* still regulates correctly so the flag gives a warning of impending failure, not an alarm of failure occurring. This gives time for an orderly system shut down of battery powered microprocessor systems.

Conclusions

The circuit approaches and packaging technologies described here solve some of the most important problems for today's power management applications.

Look for economy combined with low quiescent current and low dropout voltage, and look for space saving with small outline packages. ■

Best rf article '95

Following the success of 1994's Writers Award, ***Electronics World*** and **Hewlett-Packard** are launching a new scheme to run from January to December 1995.

Only articles which have an element of rf design will be eligible for consideration by the judging panel. It is hoped that this year's award will focus writer interest on rf engineering in line with the growing importance of radio frequency systems to an increasingly cordless world.

The aim of the award scheme is to locate freelance authors who can bring applied electronics design alive for other people.

Qualifying topics might include direct digital synthesis, microstrip design, application engineering for commercially available rf ICs and modules, receiver design, PLL, frequency generation and rf measurement, wideband circuit design, spread spectrum systems, microstrip and planer aerials... The list will hopefully be endless.

All articles accepted for publication will be paid for – in the region of several hundred pounds for a typical design feature.

The prize for the coming year's award is a £4000 Hewlett-Packard HP8647A 1GHz programmable signal generator. It features HPIB interface, solid state programmable attenuator and built in AM-FM modulation capability.

For further details about our quest for the best, call or write to:
Martin Eccles, Editor, Electronics World, Quadrant House, The Quadrant, Sutton, Surrey, SM2 5AS
Tel 081-652 3128

SOFT INDEX ON DISK

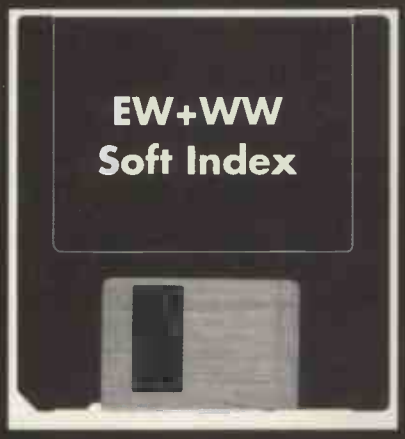

A computerised index of *Electronics World+Wireless World* magazine is now available. It covers the five years 1990 to 1994 – volumes 96 to 100 – and contains over 1400 references to feature articles, circuit ideas and applications, with a synopsis for each. The software is easy to use and very quick. It runs on any IBM or compatible PC with 512K ram and a hard disk. Each disk is scanned before shipping with the current version of Dr Solomon's Anti-Virus Toolkit.

For the UK, the five year index is priced at £20. Please specify $5^1/_4$ or $3^1/_2$in format. This price includes UK postage and VAT. Add an extra £1 for overseas EC orders or £5 for non-EC overseas orders.

Photo copies from back issues of *EW+WW* are available at 50p per page plus VAT (in EC) and a flat postage charge of 50p (UK), £1 (rest of EC), and £2 (rest of world). For enquiries about photo copies send an sae to Video Interface Products.

Please allow up to 28 days for delivery. Cheques should be made payable to **Video Interface Products,** not *EW&WW* or Reed Business Publishing.

Please post your request to **Video Interface Products Ltd, 1 Vineries Close, Cheltenham GL53 0NU, UK.**

JOHN MORRISON HARDWARE & SOFTWARE

PIC ICE II

In Circuit Emulator for PIC16C54-55-56-57-71 & 84

Replaces all 18 or 28 pin PIC's. All ports Bi-directional OSC2 output, RTCC input, on board A/D converter for PIC18C71. Supplied with PICDEV software suite, user manual, connecting leads and headers asrn, user sample files and hardware circuit projects.

£159.95

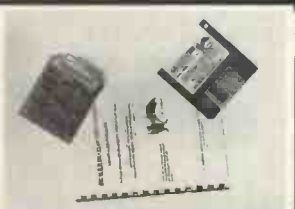

PIC PROGRAMMER

PIC 16C54-55-56-57-71 & 84

Centronics port interface, powerful editing software allows the user to Read, Write & Copy PIC devices including data memory in PIC16C84. Supplied with Editor Assembler software suite. Sample files and notes.

£99.95

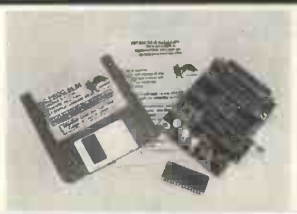

MEGAPROM EPROM PROGRAMMER

EPROMS, E² PROMS & FLASH memories from 2Kb to 8Mb
INC. MICROCHIP 24L series.

Operates via host IBM PC and centronics port, uses standard printer cable, on board production quality ZIF socket.

£99.95

EPROM EMULATOR

For ROM from 1Kb to 32Kb

Operates via host IBM PC and centronics port, uses standard printer cable. Very fast download to target board EPROM socket, operates with or without our development software suite.

£69.95

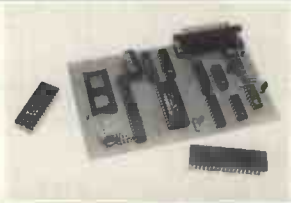

SMARTCARD/PIC CHIP PROGRAMMER

ON BOARD ISO 7816 INTERFACE, software runs on host IBM PC allowing the user to program SmartCards or PIC16C84's on a SmartCard emulator, also Programs PIC16C84 on a target board via an on board header. The perfect SmartCard development tool. Supplied with a full suite of software.

£79.95

DEVELOPMENT SOFTWARE

Develop software on your IBM PC for other Microprocessors, Controllers, PIC Chips etc. Each software suite has a fully integrated **Text editor, Assembler, Disassembler and Simulator** included. Code can be downloaded directly to our emulators. All software supplied with operator instructions and sample code.

MCS8051/52/552 – MCS8048/49 – PIC16C54/55/56/57
PIC16C71/84 – HD63/6809 – R6502 **£19.95 ea**

Please add £1.75 for P&P to UK mainland. All prices subject to VAT at the prevailing rate (17.5%)

CROWNHILL ASSOCIATES LIMITED, PO BOX 845
WATERBEACH, CAMBRIDGE, CB5 9JS

BBS: 0956 700018 TEL: 0956 700017 FAX: 01223 441645

CIRCLE NO. 109 ON REPLY CARD

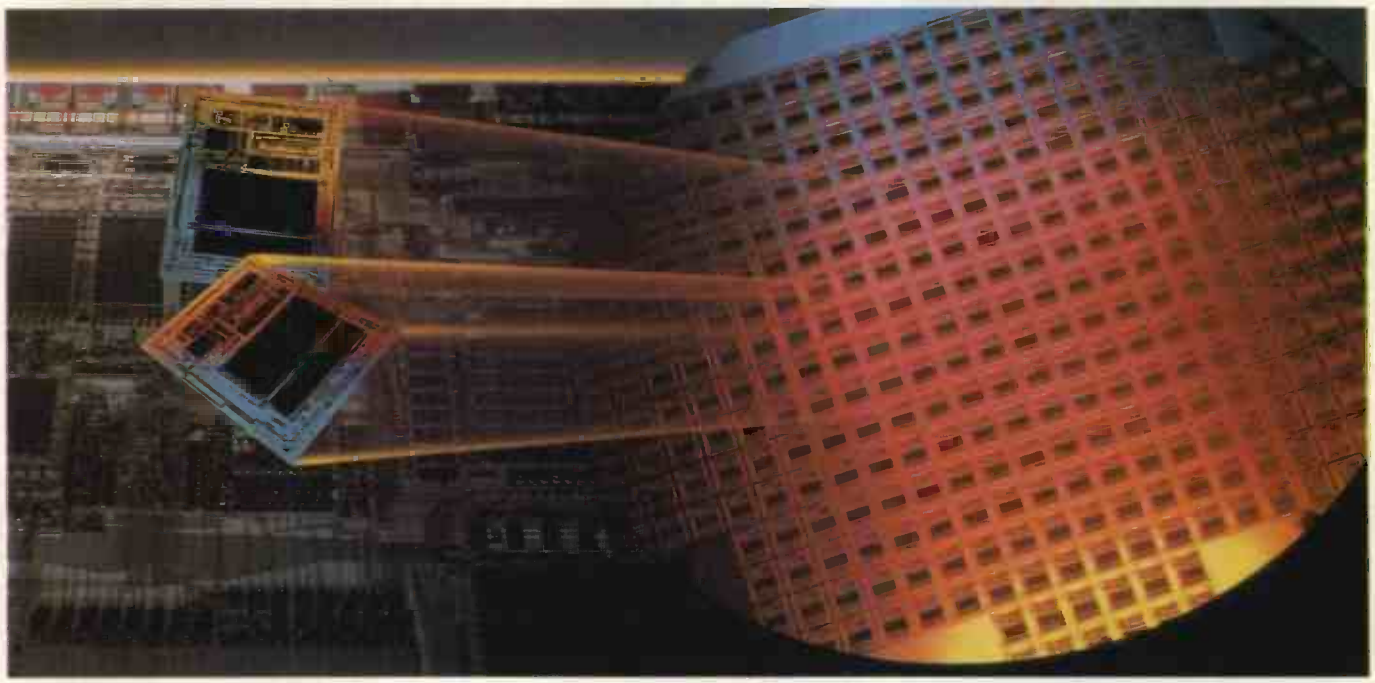

Internet modem

Phil Collins discusses the design of a 14.4kbit/s intelligent modem/fax card, ideal for Internet applications.

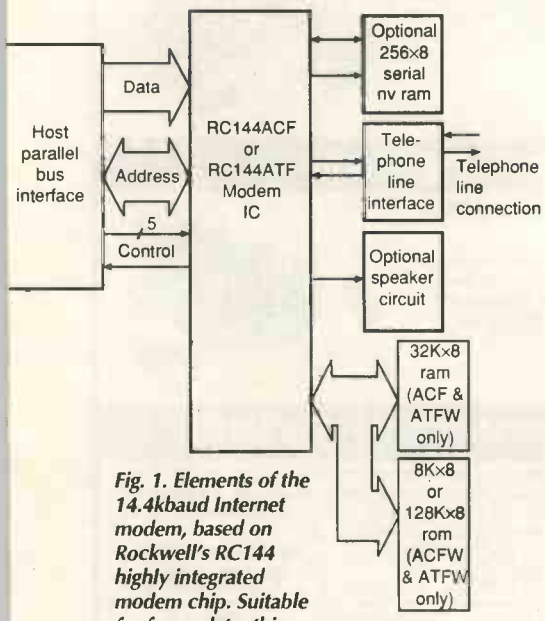

Fig. 1. Elements of the 14.4kbaud Internet modem, based on Rockwell's RC144 highly integrated modem chip. Suitable for fax or data, this version interfaces to the pc via an expansion card slot.

Highly integrated, Rockwell's *RC144* series of single device modem ICs handle data, fax and voice to 14,400 bits per second with few additional components. This design example shows how *RC144 AT* options develop into low-cost pc cards that are transparent in Internet applications and are capable of sustained data throughput of 57kbit/s.

Data compression and error correction facilities are integrated into the *RC144 AT* modem chips. The devices handles fax and data at rates of up to 14,400bits/s – i.e. V.32bis/V.17..In data mode – due to the integral compression and error correction facilities – it is possible to design a low cost, minimal-component modem capable of data throughput of up to 57,600kbit/s.

Figure 1 is a block diagram of the Internet modem for a parallel PC bus configuration..Alternative devices are available which allow a serial option **Fig. 2**.

RC144AC/AT modem family

From the basic *RC144* device, there are twenty-four variants. One of the major options is serial or parallel interfacing. Further options are listed in **Table 1**.

While the table appears daunting, it is quickly be explained. Suffix *AT* versions require the host computer to perform data compression and error correction for the modem. A package called WinRPI does this in Windows 3.1, Win95 already includes this software. Suffix *AC* versions use external static ram to enable them to perform the same error correction and compression. Another benefit of using the *AC* version is that MNP-10, the cellular data trans-

Phil Collins is sales manager, TDC

Specifications of the Internet modem design

- V.21 (300/300 bps)
- V.23 (75/1200bps)
- V.22 (1,200/1,200bps)
- V.22bis (2,400/2,400bps)
- V.32 (9,600/9,600bps)
- V.32bis (14,400/14,400bps)
- V.42 and MNP-2-4 error correction
- V.42bis and MNP-5 data compression
- Fax send & rec. to 14kbit/s (V.17)
- Fax class 1 interface
- MNP-10 cellular throughput enhancement
- COM1, 2, 3 or 4 & extended IRQ support

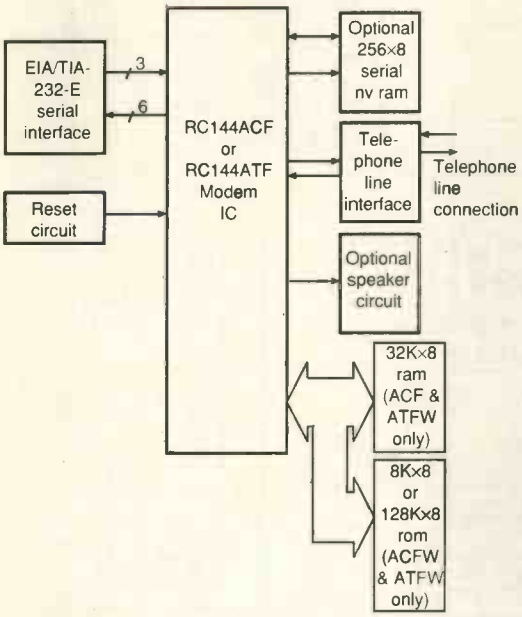

Fig. 2. Options of the RC144 fax/data modem chip allow interfacing to a pc COM port via a standard serial interface.

Table 1. There are twenty-four variants of the basic RC144 modem chip. One of the major options is serial or parallel interfacing.

Model	ECC	Fax	Voice	US/World	RAM	ROM
RC144ACFD-P	Built-in	No	No	US	32K	No
RC144ACF-P	Built-in	Yes	No	US	32K	No
RCV144ACF-P	Built-in	Yes	Yes	US	32K	No
RC144ACFWD-P	Built-in	No	No	World	32K	128K or 8K
RC144ACFW-P	Built-in	Yes	No	World	32K	128K or 8K
RCV144ACFW-P	Built-in	Yes	Yes	World	32K	128K or 8K
RC144ATFD-P	Via host	No	No	US	No	No
RC144ATF-P	Via host	Yes	No	US	No	No
RCV144ATF-P	Via host	Yes	Yes	US	No	No
RC144ATFWD-P	Via host	No	No	World	No	128K or 8K
RC144ATFW-P	Via host	Yes	No	World	No	128K or 8K
RCV144ATFW-P	Via host	Yes	Yes	World	No	128K or 8K

fer protocol is included.

Secondly, W versions are what Rockwell term 'world-class' products. This means that they can easily be configured for any country in the world, and be approved in that country..TDC provides Rockwell software called *ConfigurAce* which allows the various country parameters to be fine-tuned.

The use of 128K on-board rom allows multiple country selection to be performed, while 8K of rom provides only single country support. Normally, only 8K is used since the line interface needs to be changed for each country in a multiple-country version.

Versions suffixed *RCV*, for example the *RCV144ACFW* – add voice capability to the modem. There are extended *AT* commands which allow voice to be sampled and played back from the telephone line. With appropriate software – many fax packages include this facility – it is even possible to turn your pc into an answering machine. Voice mode also

Components for the Internet modem

Parts shown in bold type are required for the discrete line interface, and are not required when the Xecom DAA is used.

Reference	Value
C_1	18pF
C_{10}	15nF
C_{10a}	3.3nF
$C_{11,2,20,21,22,23,24}$	10μF
$C_{3,6,8,14,13,15,16,25}$	100nF
C_{17}	100nF
C_{18}	100μF
C_{19}	220μF
$C_{4,5}$	22pF
C_7	0.47μF
C_9	10μF
D_1	*IN4148* NSC
$D_{2,3,4,6}$	*BZX79CV3*
D_7	*BZX79C12*
$D_{8,9,10,11}$	*IN4004*
IC_1	*AT27C010-70DC* or *AT27C64-70DC* (70ns)
IC_1 skt	32 pin DIL 0.6in
IC_{10}	*CD74HCT245E*
IC_2	*HY62256ALP70* (70ns)
IC_2 skt	28 pin DIL 0.6in
IC_3	*RC144ACFW*
IC_3 skt	68 pin PLCC
IC_4	*TLP627*
IC_5	*4N35*
IC_7	*CD74HCT04E*
IC_8	*ST24C02AB1*
IC_9	*PCF74HCT30P*
J_2	*FCC68*
JP SKT × 3	Jumper sockets
$JP_{1,2,3,4,5}$	3 way 0.1in pitch jumper connectors
L_1	10μH
LS_1	IMO *41T70*
PCB	TDC *AE122C* (see panel)
R_1	100R
R_{10}	4k7 (6k8 if Xecom DAA is used)
R_{11}	560R
$R_{12,15,16,5}$	10k
R_{14}	1k
R_{17}	TBD
R_{18}	10R
$R_{2,6}$	680R
R_3	330R
R_4	10k
R_7	8k2
R_8	1M
R_9	56R
T_1	*1165*
Tr_1	*BC212B*
Tr_2	*ZVN3306A*
X_1	35.2512MHz
$XCOM_1$	Xecom *XE0054SIP* DAA (not needed for component line interface)

Parts required for IC amplifier

Ref	Value
C_{13}	100nF
C_{14}	100nF
C_{18}	10μF
IC_6	*LM386N3*
R_{14}	1k
R_{13}	750R

Parts required for transistor amplifier

Ref	Value
C_{18}	100μF
R_{13}	10R
R_{19}	39R

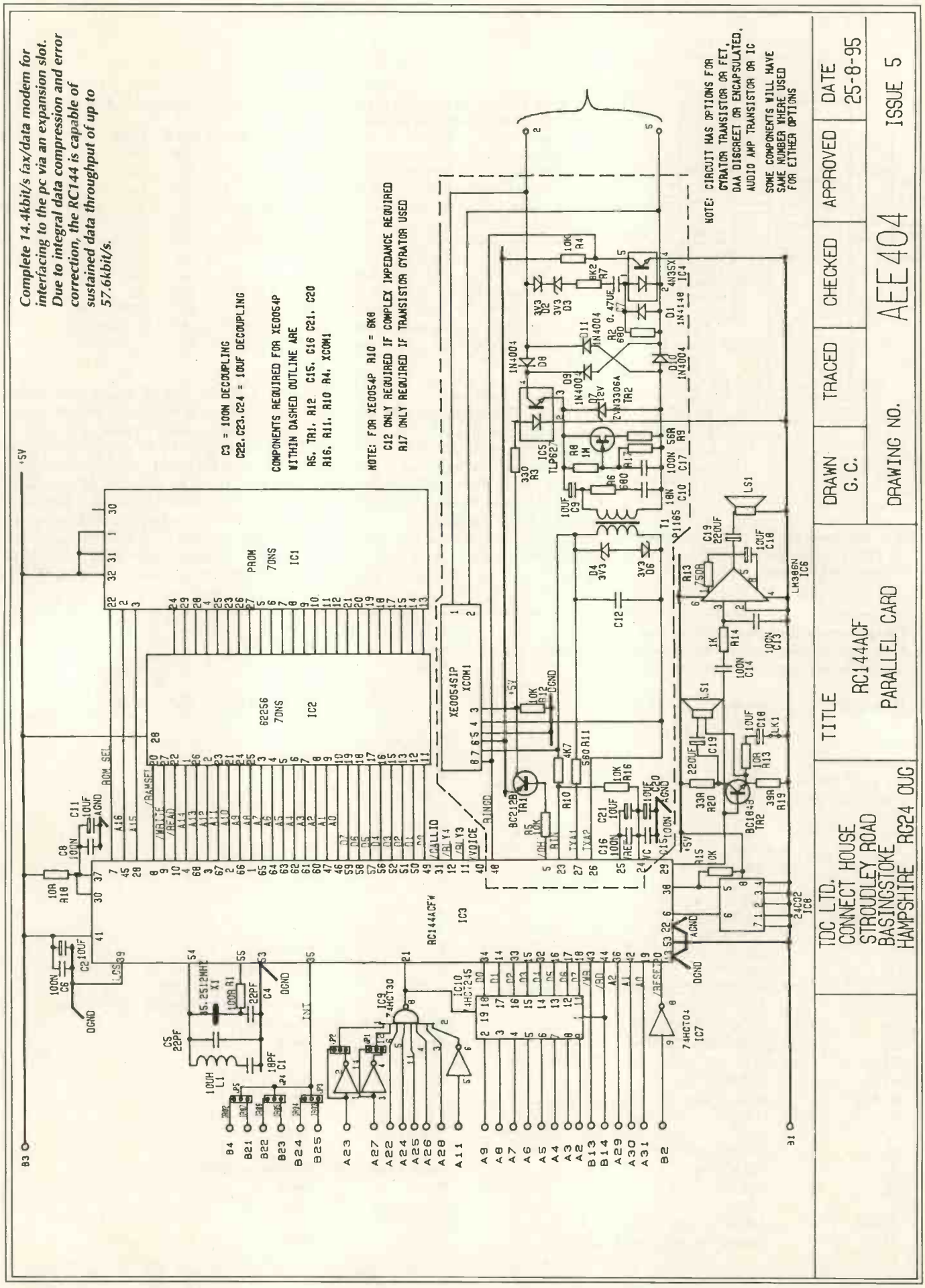
Complete 14.4kbit/s fax/data modem for interfacing to the pc via an expansion slot. Due to integral data compression and error correction, the RC144 is capable of sustained data throughput of up to 57.6kbit/s.
C3 = 100N DECOUPLING
C22, C23, C24 = 10UF DECOUPLING
COMPONENTS REQUIRED FOR XE0054P WITHIN DASHED OUTLINE ARE
R5, TR1, R12, C15, C16 C21, C20
R16, R11, R10 R4, XCOM1
NOTE: FOR XE0054P R10 = 6K8
C12 ONLY REQUIRED IF COMPLEX IMPEDANCE REQUIRED
R17 ONLY REQUIRED IF TRANSISTOR GYRATOR USED
NOTE: CIRCUIT HAS OPTIONS FOR GYRATOR TRANSISTOR OR FET, DAA DISCREET OR ENCAPSULATED, AUDIO AMP TRANSISTOR OR IC
SOME COMPONENTS WILL HAVE SAME NUMBER WHERE USED FOR EITHER OPTIONS
PROM 70NS IC1
62256 70NS IC2
RC144ACFW IC3
XE0054SIP XCOM1
TLP627 IC5
LM386N IC6
74HCT30 IC9
74HCT245 IC10
74HCT04 IC7
24C02 IC8
TDC LTD.
CONNECT HOUSE
STROUDLEY ROAD
BASINGSTOKE
HAMPSHIRE RG24 OUG
TITLE
RC144ACF
PARALLEL CARD
DRAWN G. C.
TRACED
CHECKED
APPROVED
DATE 25-8-95
ISSUE 5
DRAWING NO.
AEE404

includes the ability to detect dual-tone multiple-frequency, or dtmf, tones allowing signalling and control to be performed from an ordinary telephone.

Versions with *D* in the part number are data only and do not include fax. The *-P* at the end of the part number indicates the chip is a parallel version for pc-card or PCMCIA designs..The alternative is *-S*, which specifies serial normally used in external desktop modems.

A board designed to take one particular parallel device will accept any of the devices with the *-P* suffix. This makes it is possible to choose the feature set after the modem has been designed. Of course the same applies to the serial product family.

Contacts and technical support

TDC is the distributor for Rockwell and Xecom in the UK, and specialise in the supply of modem components to the communications industry. A manufacturing package is available from TDC which includes full documentation, and a disk with Gerber files, e-prom image etc. This package allows manufacture of this modem in volume at a minimum cost. Its price is £75 plus VAT and carriage..The 8K e-prom image for the UK is available free of charge on TDC's BBS, file name TDC144.HEX. TDC can also help with BABT approvals.

For readers wanting to produce small quantities or one-offs, Siskin Electronics, tel 01703 243400, can supply the pcbs, programmed e-proms and other parts.

Once you have the modem working, you can connect to Rockwell's home page – http://www.nb.rockwell.com – to read about the latest developments in modem technology..You can even ask BaudMan – SuperHero of the SuperHighway – a question about modems.

The author can be contacted at TDC on 01256 332800, BBS 01256 57900, or via Compuserve on 100702,1162.

Modem architecture

As with all modems these chips comprise a number of basic building blocks.

DTE interface. This is usually either RS232 serial or parallel pc bus.

Modem data pump. The data pump is the heart of the modem. It is a fast digital signal processor which modulates and demodulates signals carried across the telephone line.

Modem controller. A microprocessor – the modem controller – handles the AT commands, data compression, line control etc. In this modem, both the data pump and controller are integrated into the one 68-pin PLCC package. Rockwell uses novel *HyPAC* technology which puts a number of different silicon die into a special leadframe providing the interconnects. This allows Rockwell to simply integrate the digital and analogue technologies into the one device.

The *RC144* contains *three* pieces of silicon, the DSP, controller and an integrated analogue device.

Non-volatile ram. although not essential, this device is useful for storing frequently dialled telephone numbers and personalised configurations.

Line interface. This connects – and isolates – the modem to the telephone line. Most countries have different standards and connectors for telephone line connection, and of course it is illegal to connect a modem which is not approved for that country. The design here has *not* been approved for use in the UK, although it has been designed to be approvable.

You can choose between two types of line interface on the pcb – a discrete line interface made up of individual components (BABT approvable), or an encapsulated line interface manufactured by Xecom. The pre-built option replaces some 25 or so components – including the transformer and some special opto-isolators..The module provides all of the line isolation, ring detect and line hold functions.

Designing a pc card modem

The circuit is based upon a pc half-card design, and of course is dominated by the Rockwell chip. A 32K ram and 128K eprom are provided for, with the latter being replaced by an 8K eprom for the single country option.

The PC bus is a standard 8-bit ISA type, so should be compatible with most pcs. A *74HCT245* bi-directional buffer isolates the modem from the pc bus when it is not being accessed.

Table 2. The Internet modem card can be set for communication via any one of the four standard COM ports on the pc.

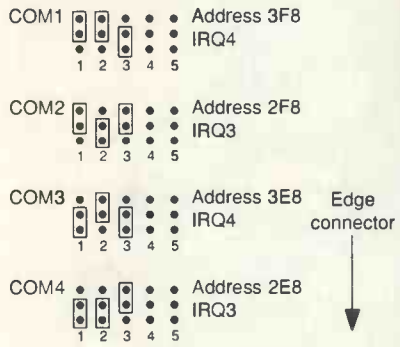

Table 3. On the modem card, jumpers are provided for non-standard address and IRQ selections.

Jumper	Function	High	Low
1	A4 address select	F	E
2	A8 address select	3	2
3	IRQ line selection *	3	4
4	IRQ line selection *	5	6
5	IRQ line selection *	7	2

*Note that only one IRQ line should be selected at any one time.

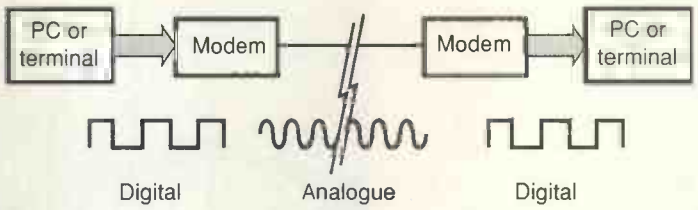

In order for digital data to pass over a normal telephone line, it needs to be converted to analogue form at the sending end and back to digital at the receiver. Ones and zeros travelling over the line are usually represented by two tones.

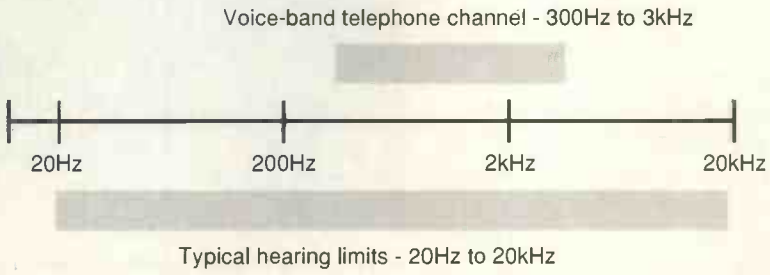

When communicating data over the public switched network, data rate is usually limited by the bandwidth of the telephone line, which is only designed to carry part of the voice spectrum. But data compression and error correction can provide significant benefits.

For communicating between the card and pc, the *RC144* chip emulates a *16550* fast serial port. As a result, the modem appears as a COM port.

When setting up COM ports, it is important to be aware of COM ports already in use within the pc. If your pc already has COM1 and COM2, the natural selection is of course COM3. However, the standard setting for COM3 shares an interrupt with COM1, the outcome of which is an interrupt clash with some other device – usually causing lost data.

It makes sense therefore to change the interrupt used from the default IRQ4 to, say, IRQ5. Windows 3.1 allows you to set the new interrupt, but other packages may not. Check for these compatibility problems before suspecting something is wrong with the modem.

The modem incorporates expanded COM port setup facilities to allow for maximum flexibility. There are five jumpers on the board. **Table 2** shows the standard dos configuration you should select for each port. The diagrams are shown with the edge connector facing down. **Table 3** shows jumper functions for those who wish to use non-standard configurations.

The speaker allows for call progress monitoring. It has two drive circuit options. The lowest cost option is a single transistor amplifier using Tr_2, R_{19} and R_{20}. A link should be fitted in LK_1 when using this option.

Better audio output is provided by using an *LM386* amplifier, C_{14}, R_{14}, and C_{13}. If no audio output is required, for example in an unmanned or embedded system, then these components can be left out.

Many more components are omitted when the Xecom DAA is used, but note that R_{10} needs to be changed to 6.8kΩ in this case.

Gaining approval

Although the modem described here is UK approvable, prospective manufacturers may wish to make use of a UK approval service offered by TDC. The modem can be approved and manufactured in your own name.

Those with experience of modem design will note the absence of a 2-to-4 wire hybrid..Remember that a telephone line is based on two wires, and both sides – transmit and receive – of a conversation take place simultaneously. For a modem to operate, the received signal needs to be isolated from the transmitted signal. In many modems this is performed externally using an op-amp, but on the Rockwell device, this circuitry is included.

A *24C02* non-volatile ram provides parameter storage for the modem. But if the modem is initialised every time by host software, this may not be required – again reducing cost. ■

This article is based on a Rockwell application note, a copy of which is available to modem designers from TDC.

Rockwell

Rockwell has been the main supplier of silicon to the modem industry since it began, now supplying over 70% of the world's data modem devices and over 80% of fax modems. The *RC144AT* and *AC* family represent just a small part of the company's product portfolio, which comprises V.34 down to V.21 modem chips and fax/voice chips. Rockwell also manufactures the *MicroTracker LP* GPS receiver, featured in the August issue of *EW+WW*.

Modem seminars

Modem Seminars covering the theory of operation, approvals, new technologies, line interfaces etc, are organised by TDC. The next is scheduled for the 18th of January 1996 in Basingstoke. The cost is £25, which covers seminar hand-outs and lunch. TDC also runs GPS seminars covering the Rockwell GPS receivers.

Internet Modem – an *Electronics World* exclusive reader offer

Key components for the 14.4kbit/s Internet modem described in the article on page 923 are available from Siskin for £49.95 excluding VAT. These components are the RC144 chip, a pcb, ready-programmed eproms and a technical manual. Note that the modem is based on the UK telephone standard. Please add £1.50 carriage with your order and make your postal order payable to Siskin Electronics. Credit card details should include type of card, card number and expiry date. Send the order to Siskin at Unit 1A, Hampton Lane, Blackfield, Nr Southampton, SO45 1WE, tel. 01703 243400, fax 01703 243500.

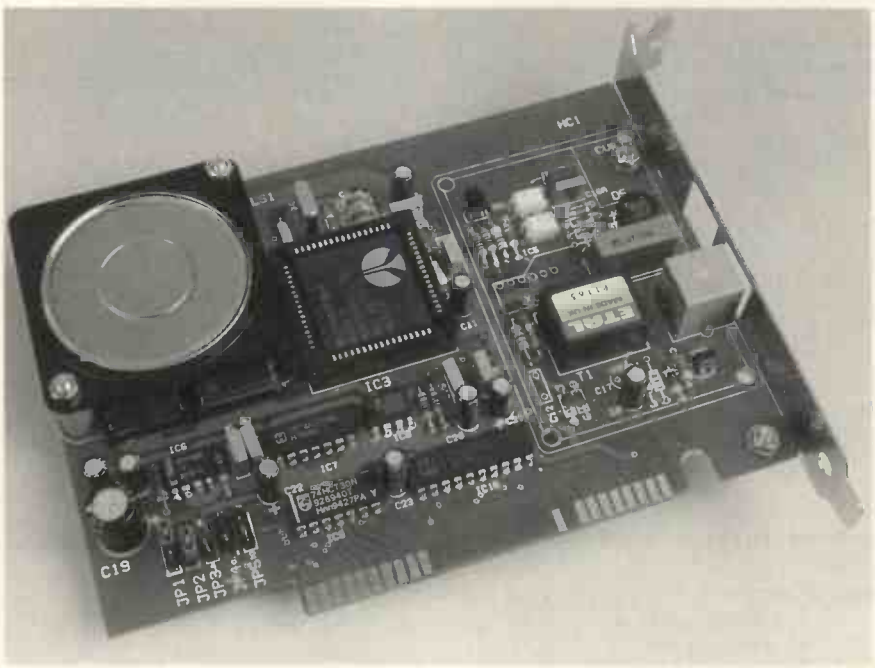

PC interfacing 14.4kbit/s modem includes error correction and compression to achieve sustained data throughput of 57kbit/s.

Field Electric Ltd.

Tel: 01438-353781 Fax: 01438 359397
Tel: 01625 434623
Mobile: 0836-640328/0860-213370
Unit 2, Marymead Workshops,
Willows Link, Stevenage, Herts, SG2 8AB.

VISA

102 Key IBM compatible keyboard terminated to 6 pin mini din type PS2 plug	£8.00 c/p £3.75
Yuasa NP 10 6 6v 10ah sealed lead acid battery New	£7.95 c/p £4.00
PC PSU new 200 watt square type standard plus	£15.00 c/p £5.00
NEC CMV 123ne 12" colour VGA/SVGA 800 x 600	£75.00 c/p £14.00
NEC CMV 103 9" colour VGA/SVGA 800 x 600	£60.00 c/p £12.00
Sony 9" colour Trinitron KTM 1000ub data for RGB	£50.00 c/p £12.00
12" Mono VGA (paper white) chassis enclosed 240v	£30.00 c/p £15.00
AT&T 16" graphics colour monitor terminal 25 pin D connector with keyboard new & boxed	£90.00 c/p £18.00
Coutant DC/DC converter new 48v in 5v out 5a	£6.00 c/p £2.50
240v to 110v 80W Toroidal transformer auto new	£7.00 c/p £3.00
12vdc Fans 90 x 25mm qty discount	£3.00 c/p £1.50
Laser drive inc: Model 134 HE NE gas laser input 10-14v output DC 1250v new and boxed	£100.00
Sony video cassette player VP5040 NTSC/PAL/SECAM	£280.00
Star Serial (RS232) interface IS-8XM new boxed	£4.00 c/p £2.00
Calcomp 2200 digitizer (slight case damage)	£100.00 c/p £15.00
CCD Barcode reader ideal for EPOS etc: reads high and low density barcode	£70.00 c/p £6.00
Diconix 300 inkjet printer new boxed 308 CPS 80 col: parallel	£190.00
RS H.V Probe 610-281 new boxed	£20.00 c/p £5.00
Mains conditioner and UPS please ring	
HP 1727a 275Mhz storage oscilloscope	£490.00
HP 7470a Plotter IEEE including interface cable	£95.00 c/p £17.00
HP 3551a Transmission test set	£565.00
Tektronix 7A18 dual trace amp plug in	£75.00 c/p £9.00
Tektronix 7B53 dual time base plug in	£75.00 c/p £9.00
Tektronix 7A15A amp plug in	£175.00 c/p £10.00
Tektronix 7CT1N curve trace plug in	£450.00 c/p £12.00
Tektronix 7D12 A/D converter plug in	£140.00 c/p £10.00
Switchcraft plug new qty discounts	£1.50
Chessel 301 chart recorder	£40.00 c/p £15.00
Mannesman Tally 910 laser printer (needs some attention)	£110.00
Astec SA 30-1306 +5 @2A +15 @1.8A – 15 @.3A new boxed	£8.00 c/p £2.00
AT&T Starlan 10 network hub model E	£150.00 c/p £16.00
Racal Dana 9301a R.F millivoltmeter true R.M.S.	£185.00 c/p £15.00
Stag Prom eraser SE100	£110.00 c/p £16.00
Elan E9D copier/programmer EPROM/EePROM editing and interface new boxed	£325.00 c/p £18.00

PLEASE ADD 17.5% VAT. TO ORDER: RING FOR C/P PRICES NOT SHOWN: OFFICIAL ORDERS AND OVERSEAS ENQUIRIES WELCOME

TO ALL SMALL BUSINESSES AND COMPANIES. WE WOULD LIKE TO BUY YOUR SURPLUS OR REDUNDANT COMPUTER HARDWARE/GOOD TEST EQUIPMENT ETC.

CIRCLE NO. 110 ON REPLY CARD

EMBEDDED C ASSEMBLY SIMULATION

8051

C compiler, first released in 1991, now features:

- Easy to use interrupt support with register bank switching
- IEEE floating point arithmetic
- IEEE 695 source level debug output
- Intergrated relocatable assembler

Simulator running under Microsoft Windows provides extensive support for the 8051 code development

68000

Our first C compiler/assembler package

- now supports floating point arithmetic
- has been widely adopted by many OEMs to support their 68000 and 68307 hardware

CPU32

68020 C compiler/assembler, originally developed to accompany Motorola's 68020 and 68EC020 evaluation models

- Now supports the CPU32
- 68881 co-processor support
- IEEE 695 source level debug output

Further information from:
CROSSWARE PRODUCTS
St John's Innovation Centre, Cowley Road, Cambridge, CB4 4WS, UK
Tel: +44 (0) 1223 421263, Fax: +44 (0) 1223 421006
BBS: +44 (0) 1223 421207 (8-N-1), Internet: sales@crossware.com

CROSSWARE

CIRCLE NO. 111 ON REPLY CARD

COMPONENTS FOR MODEMS

Telecom Design Communications - the one-stop shop for all your modem needs.

Modem Chipsets

Rockwell's range of market-leading modem devices provides high-speed 28.8 kbps, through single-chip 14.4 kbps with data/fax/voice, to low power, low cost 2400 bps data only. Call TDC for superb solutions for fast Internet access.

CONNECT with Rockwell

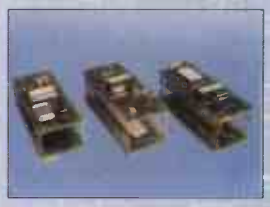

SocketModems™

Rockwell SocketModems™ make integration of voice, data, and fax functionality a breeze. Connect with one of our BABT line interfaces for fastest time to market.

Digital Simultaneous Voice & Data

Operating at 28.8 kbps, DSVD is ideal for new and expanding markets like business presentations and interactive games - play and talk simultaneously on a single standard phone line!

Line Interfaces

Carrying a BABT Certificate of Recognition to ease the path to full UK approval, Xecom Inc. line interfaces are the compact solution to PSTN connection. Other country versions are also available.

Modem Manufacturing Packages

Aimed at OEMs and System Integrators wishing to incorporate modem functionality into their products, TDC have introduced an evaluation board based on Rockwell's single-chip V.32bis data/fax/voice device.

If you need communications facilities, our team of applications engineers can assist you at every stage from design and integration through to BABT approval.

TDC
TELECOM DESIGN COMMUNICATIONS LTD

Telecom Design Communications;
Connect House, Stroudley Road,
Basingstoke, RG24 0UG.
Tel: 01256 332800.
Fax: 01256 332810.
BBS: 01256 57900.

51° 16. 16'N, 0° 1.04'W: SU 653535.46531535

CIRCLE NO. 112 ON REPLY CARD

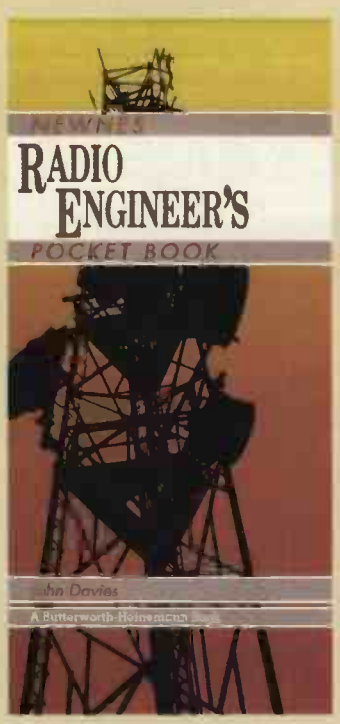

Radio Engineer's Pocket Book

by John Davies, 240pp, hardback
Order – ISBN 0 7506 1738 1
Price £12.99

Contains: Propagation; decibel scale; transmission lines; antennas; resonant circuits; oscillators; piezo-electric devices; bandwidth requirements and modulation; frequency planning; radio equipment; Microwave comms; information privacy and encryption; multiplexing; speech digitisation and synthesis; vhf and uhf mobile communication; signalling; channel occupancy, trunking; mobile systems; base station management; instruments; batteries; satellite comms; connectors and interfaces; broadcasting; abbreviations and symbols; tables and data; glossary.

Covers all aspects of radio and communications engineering from **very low frequencies to microwaves**, with particular emphasis on mobile communications. Wave principles and the decibel scale, instrumentation and power supplies, equipment types and encryption methods, connectors and interfaces, are all included in this book.

Audio Recording and Reproduction

Michael Talbot-Smith, 204pp, paperback
Order – 0 7506 1917 1
Price £12.99

Contains: Physics of sound waves; hearing; basic acoustics; microphones; loudspeakers; public address; stereo; simple mixing equipment; recorders; introduction to digital audio; music and sound effects; miscellaneous data.

This book gives a simple and straightforward approach to audio techniques, **detailing technical and practical information** for those with no specific training in the subject.

Circuit Designer's Companion

by T Williams, 320pp, paperback
Order – 0 7506 1756 X
Price £15.99

Contains: grounding and wiring; printed circuits; passive components; active components; linear integrated circuits; digital circuits; power supplies; electromagnetic compatibility.

Valued by linear and digital designers alike, this guide explains and outlines solutions that take into account the imperfect behaviour of real components, interconnections and circuits.

Servicing Personal Computers

by Michael Tooley, 304pp, hardback
Order – ISBN 0 7506 1757 8
Price £25.00

Contains: Microcomputer systems; test equipment; fault diagnosis; tape and disk drives; printers and monitors; servicing IBM pc compatibles and 68000-based computers.

This completely rewritten fourth edition still covers the whole range of microcomputer equipment but now also **includes a guide to developments and trends** such as the new generation of diagnostic software – code included – and applications such as serial communication, and memory and hard disk management..

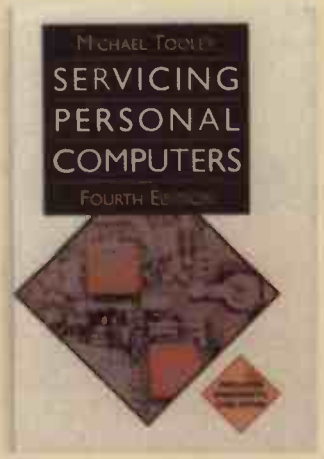

Newnes Audio and Hi-Fi Handbook

by Ian Sinclair, 656pp, hardback
Order – ISBN 0 7506 0932 X
Price £40.00

Contains: Sound waves and acoustics; studio acoustics; microphones; sound synthesis; introduction to digital principles; compact disc technology; other digital systems – DAT, NICAM, DCC, MD – analogue tape recording; noise reduction systems; LP records; disc reproduction; tuners and radio receivers; preamps and inputs; voltage amplifiers/controls; loudspeakers and enclosures; Headphones; public address; in-car audio; interconnections; the future.

Covers a **wide perspective of high-quality sound reproduction**, including reproduction under adverse circumstances, from less conventional sources and with regard to the whole technology from studio to ear.

TV & Video Engineer's Reference Book

by Boris Townsend, 876pp, paperback
Order – ISBN 0 7506 1953 8
Price £40.00

Contains: Materials; components and construction; colour tv fundamentals; broadcast transmission; distributing broadband; DBS; tv studios; mobile and portable equipment; tv sound; tv receivers; servicing tvs; video recorders; teletext etc; HDTV; other applications of tv; performance measurements.

Covers information on every aspect of modern broadcast technology. Of value to all practicing engineers and managers involved with broadcast, cable and satellite services.

Masts, Antennas and Service Planning

by Geoff Wiskin, 256pp, hardback
Order – ISBN 0 240 51336 3
Price £49.50

Contains: Antennas; antenna support structures; service planning.

Covers all aspects of information conveyance via radio-wave transmission. Invaluable to anyone planning for broadcast and mobile-radio coverage, or designing, installing and maintaining antenna systems.

Operational Amplifiers

by Jiri Dostal, 400pp, hardback
Order – 0 7506 9317 7
Price £40.00

Contents: The operational amplifier; basic concepts; operational amplifier parameters; operational amplifier properties; the operational circuit; the ideal operational circuit; analysis of the real operational circuit; static and dynamic errors in the frequency domain; dynamic errors in the time domain; input and output impedances;

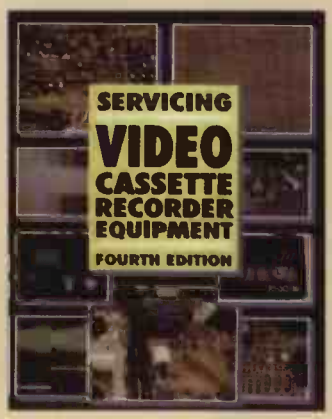

offset; noise; stability; good laboratory practices.

Presents an extensive treatment of applications and a practically oriented, unified theory of operational circuits. Provides the reader with practical knowledge necessary to select and use operational amplifier devices.

Servicing Video Cassette Recorders

by Steve Beeching, 250pp, hardback
Order – ISBN 0 7506 0935 4
Price £25.00

Contains: Vcr systems; azimuth tilt;.Frequency modulation; servo mechanisms; colour systems; systems control; long play; VHS-C & camcorders; a-v sockets.

Written for students and people involved with vcr servicing, this book is an invaluable guide and reference covering all aspects of modern vcrs. Contains new material on basic magnetic theory to C&G 224

Principles of Transistor Circuits

by S W Amos, 384pp, paperback
Order – 0 7506 1999 6
Price £17.99

Contains: Semiconductors and junction diodes; basic principles of transistors; common-base and common-gate amplifiers; common-emitter and common-source amplifiers; common-collector and common-drain amplifiers; bias and dc stabilisation; small-signal af amplifiers; large-signal af amplifiers; dc and pulse amplifiers; rf and if amplifiers; sinusoidal oscillators; modulators, demodulators, mixers and receivers; pulse generators; sawtooth generators; digital circuits; further applications of transistors and other semiconductor devices.

This seminal work has now been presented in a clear new format and completely updated to include the latest equipment such as laser diodes, Trapatt diodes, optocouplers and GaAs transistors, and the most recent line output stages and switch-mode power supplies.

Logic Designer's Handbook

by Andrew Parr, 488pp, paperback
Order – 0 7506 0535 9
Price £30.00

Contains: Simplified data on a comparative basis of ttl and cmos ics; storage devices; logic circuits; timers; counters; drivers; interface circuits; logic gates; definitions of ic characteristics; event driven logic; communication and highways; analogue interfacing; practical considerations; summaries by function of all relevant circuits; individual pin-out diagrams.

Easy-to-read, but nonetheless thorough, this book on digital circuits is for use by students and engineers, and is a readily accessible source of data on devices in the ttl and cmos families.

The Art of Digital Audio

John Watkinson, 490pp, hardback
Order – 0 240 51320 7
Price £49.50

Contains: Why digital?; conversion; AES/EBU; digital audio coding and processing; digital compact cassette (DCC); advanced digital audio processing; digital audio interconnects; digital recording and channel coding; error correction; rotary head recorders; stationary head recorders; NAGRA and data reduction; Digital Audio Broadcasting (DAB); the compact disc/mini disc.

New edition, completely updated to include all the latest developments, including DCC, the mini disc and digital audio broadcasting.

Microphone Engineering Handbook

by Michael Gayford, 384pp, hardback
Order – 0 7506 1199 5
Price £65.00

Contains: Microphone techniques; precision microphones; optical microphones; high quality rf microphones and systems; radio microphones and ir systems; microphone testing; ribbon microphones; microphone preamplifiers; stereo microphones; microphone standards.

Comprehensive and authoritative book for engineers, technicians, students and anyone else concerned with the design and use of microphones.

MIDI Systems and Control

by Francis Rumsey, 256pp, paperback
Order – 0 240 51370 3
Price 19.95

Contains: Introduction to principles and terminology; synchronisation and external machine control; common implementations; systems control sequences and operating systems; implementation of midi with peripheral devices; practical systems designs.

Second edition is updated and enlarged to take MIDI evolution into account. More examples of real implementations, more diagrams and the whole book has been rewritten to include a far greater practical element, to complement its existing technical strengths. Several completely new sections and complete chapters have been added including a new opening chapter as an introduction to principles and terminology; MIDI timecode; librarians and editors.

Loudspeaker and Headphone Handbook

by John Borwick, 224pp, hardback
Order – 0 240 51371 1
Price £35.00

Contains: This book brings together in a single volume every aspect of loudspeaker and headphone theory and practice in sufficient depth to equip students and practitioners alike with a solid working knowledge of the subject. A comprehensive technical reference on the theory and practice of loudspeaker and headphone performance, design and operation.

The Art of Linear Electronics

by John L Hood, 400pp, paperback
Order – 0 7506 0868 4
Price £16.99

Contains: Electronic component symbols and circuit drawings; passive components; active components based on thermionic emission; active components based on semi-conductors; practical semi-conductor components; dc and low frequency amplifiers; feedback negative and positive; frequency response; modifying circuits and filters; audio amplifiers; low frequency oscillators and waveform generators; tuned circuits; high frequency amplifiers/oscillators; radio receiver circuitry; power supplies; noise and hum; test instruments and measurements.

This practical handbook gives a complete working knowledge of the basics and technology of linear electronics – with application examples in such fields as audio, radio, instrumentation and television.

Servicing Audio and Hi-Fi Equipment

by Nick Beer, 304pp, hardback
Order – 0 7506 2117 6
Price £25 .00

Contains: Introduction; tools and test equipment; radio receivers; amplifiers; power supply circuits; portable audio; cassette deck mechanics; cassette electronics; turntables; system control; motors and servo circuits; compact disc; mini disc; digital audio tape; digital compact cassette; speakers, headphones and microphones; repair, addresses.

As a bench-side companion and guide, this work has no equal. Its purpose is to ease and speed up the processes of fault diagnosis, repair and testing of all classes of home audio equipment: receivers, amplifiers, recorders and playback machines.

EMC for Product Designers

by Tim Williams, 304pp, hardback
Order – ISBN 0 7506 1264 9
Price £25.00

Contains: What is EMC? standards; EMC measurements; interference coupling mechanisms; circuits; layout and grounding; interfaces; filtering and shielding.

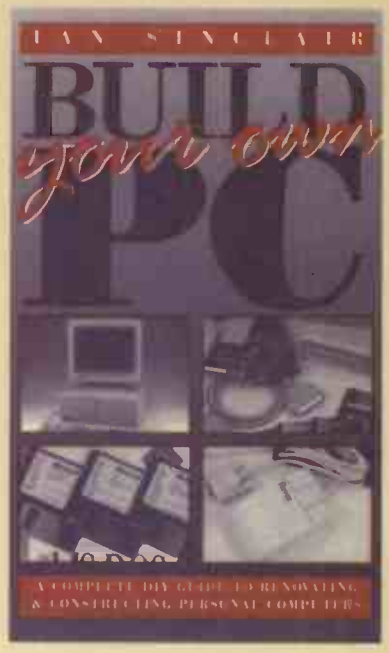

'This book is likely to become essential reading for those designing electronic products for the European market,' according to *New Electronics*. Widely regarded as the standard text on EMC, providing all the information needed to meet requirements of the EMC Directive.

Build Your Own PC

by Ian Sinclair, 256pp, paperback
Order – ISBN 0 7506 2006 4
Price 16.95

Contains: Assembly from scratch – mainly for masochists; fundamentals and buying guide; case, motherboard and keyboard; disk-drive details; improvers and modifiers for graphics and i/o; DOS operation and hints; Windows; connecting printers; glossary.

Covers Building your own pc from scratch or from modules. Written at a level suitable for beginners *and* those with experience of computers or electronics. In addition, this work provides a useful guide for anyone wanting to save money by upgrading their pc themselves.

Return to Jackie Lowe, Room L333, Quadrant House, The Quadrant, Sutton, Surrey, SM2 5AS

Please supply the following titles:

Qty	Title or ISBN	Price

Please add £2.50 UK Postage, £5.00 Europe £7.50 Rest of World

Total_____

Name_____

Address_____

_____

Post code_____ Telephone_____

Method of payment *(please circle)*

Access/Mastercard/Visa/Cheque/PO

Cheques should be made payable to Reed Business Publishing

Credit card no_____

Card expiry date Signed

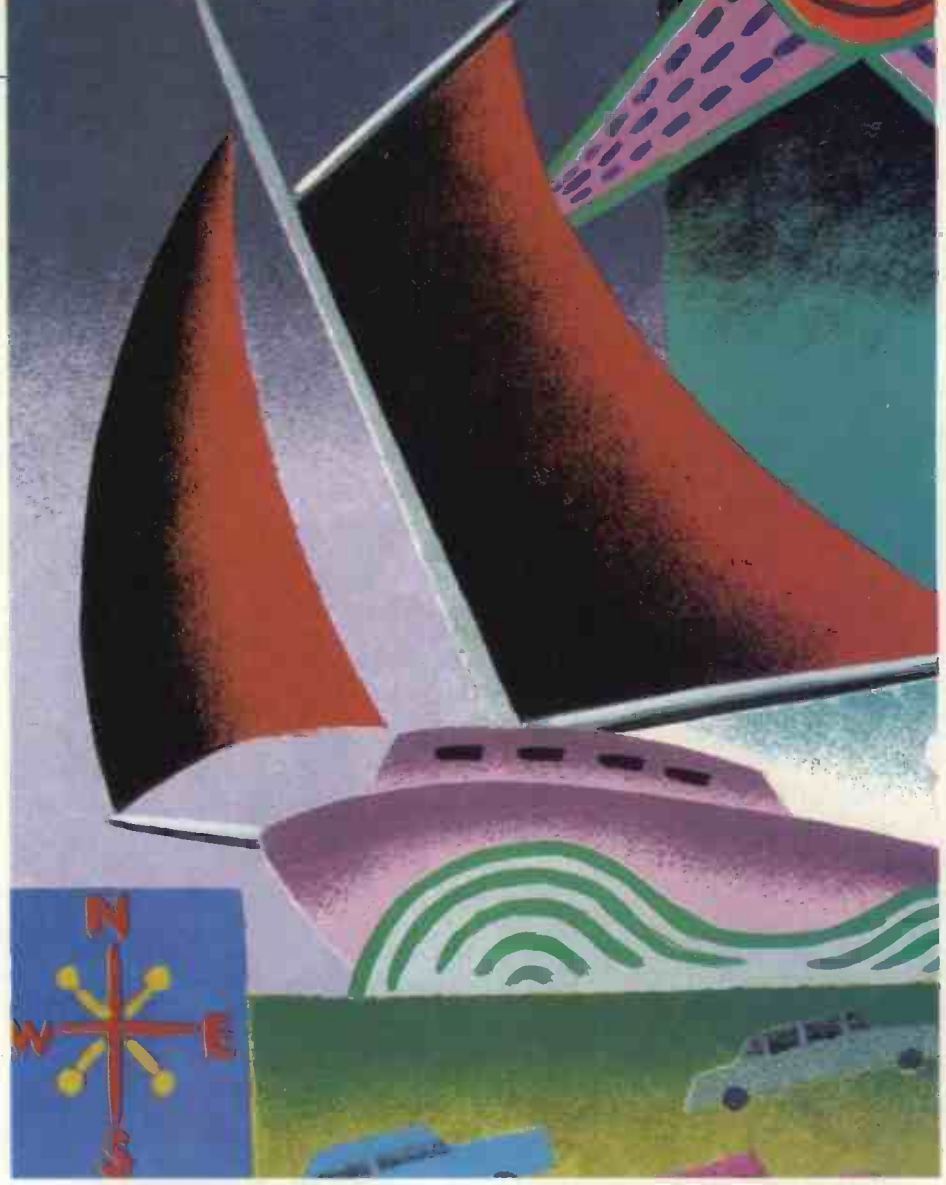

A new direction in magnetic sensing

Richard Noble looks at how a new three-terminal magnetic sensor offers benefits in temprerature sensitive field detection applications down to 10nT.

British company Speake & Co has developed a high-sensitivity magnetic field sensor operating in the ±50μT range. Having only three terminals and an output preiod proportional to field strength, the device is easy to interface. In addition, the device runs from a single 5V supply.

Unlike Hall-effect sensors, which are difficult to apply at these field levels because of their sensitivity to temperature, the FGM-3 senosr has a typical temperature coefficient of 0.003%/°C at around 25°C. Its operating temperature range is 0-50°C.

Output of the device spans ~50kHz to ~120kHz. As the lowest effective Nyquist sampling rate is ~50kHz, appropriate digital filtering can provide an ac field bandwidth from dc to around 20kHz.

Richard is Technical Director of Speake & Co Ltd.

Since the range covers the Earth's magnetic field, multiple sensors can easily be arranged to provide compass orientation, or full three-dimensional orientation systems, using the local Earth's magnetic field as a reference. Other applications include conventioinal magnetometry, ferrous-metal detection and vehile re-orientation alarms.

Decoupling and power supply regulation

If long leads are used with the sensor, it is advisable to provide some local decoupling close to the sensor itself where possible. A 10μF electrolytic capacitor is suitable for this.

Since the sensor has a sensitivity of a few percent to power supply variations, it is necessary to provide it with some power regulation in most cases. For many applications, such as ori-

entation devices, a single fixed voltage regulator of the *LM98L05* or equivalent type is adequate. However, for applications such as earth field magnetometry or where extremely small field variations are being studied, supply voltage variation needs to be reduced to a level which permits the temperature coefficient of the device to be the limiting performance factor.

Double regulation from 12-15V, first down to 9V and then to 5V, using the *LM98L09* and *LM98L05* provides a low-cost solution, **Fig. 1**.

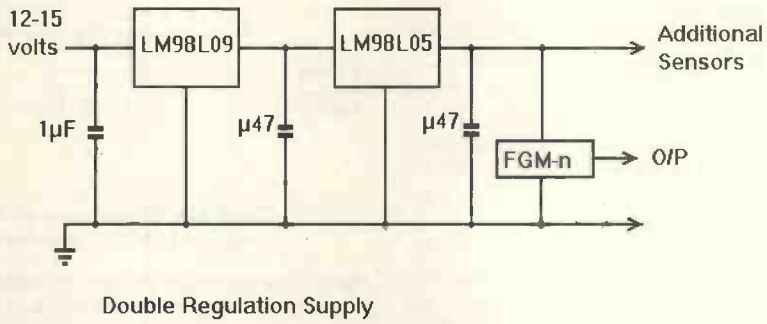

Fig. 1. The three-terminal sensor is very stable with temperature, but it needs a doubly regulated supply for best perfromance.

Sensor calibration

For many applications, such as simple field detection or orientation measurement systems, calibration of the sensors is not necessary.

For applications that do need to measure field strength, a reasonably accurate calibration can be made using simple equipment. A single-layer solenoid can easily be made by close-winding enamelled wire on to a tube having an internal diameter large enough for the sensor to be inserted in it. The field inside a long solenoid is given simply by the product of the current flowing in it and the number of turns per metre with which it is wound. Both these items can be measured reasonably accurately, one with a ruler, the other with an ammeter.

For most purposes, a winding at least twice as long as the sensor will give a good calibration, consistent with the likely turns/metre measurement accuracy using a ruler – provided its diameter is no greater than necessary.

Single axis sensors are the easiest in this respect because they have a small diameter and can be inserted into a small diameter tube. The following should be helpful in the the design of calibration coils.

First, the field at the centre of a cylindrical coil of the type suggested is given by,

H=geometry-factor×*turns/metre*×*current*

where H is in A/m and geometry-factor is shown in **Table 1**.

Table 1. Factors needed to calculate field produced by the magnetic calibrator.

Length/ diameter	Geometry factor
5	0.9806
6	0.9864
7	0.9900
8	0.9923
9	0.9939
10	0.9950

This permits calibration of the coil centre-field. The correction is small, somewhere between 0.5 and 2%, but may be worthwhile in appropriate cases.

Away from the centre of the coil the field falls off towards either end. On the assumption that the coil is twice as long as the sensor, **Table 2** gives a factor for this reduction, at either end of the sensor, for various coil geometries. It also shows, in the third column, the percentage by which the field differs from being uniform along the length of the sensor, assuming that the sensor is centrally placed.

Table 2. Reduction factors to compensate for falling off of field towards the ends of the calibration coil.

Length/ Diameter	Reduction factor	Uniformity
5	0.9788	±1.06%
6	0.9847	±0.77%
7	0.9884	±0.58%
8	0.9910	±0.45%
9	0.9938	±0.31%
10	0.9942	±0.29%

The geometry-factor from Table 1 should be reduced by this percentage to arrive at a mean calibration factor for the coil, for the most accurate results.

Calibration currents required are modest. Since the usable range of the sensor is around ±0.5 oersted or 40A/m, a single-layer winding of 0.5mm enamelled wire, with a diameter of around 0.559mm, will only require 23mA to reach maximum calibration field strength.

In carrying out such a calibration with a solenoid coil, the coil and sensor should be aligned at right angles to the direction of maximum local field, as determined by the sensor alone. Where only relative field measurements are needed this can be done by simply aligning the coil and sensor in an east-westerly direction.

If an accurate zero field calibration point is required the sensor will need to be placed in a zero-field location, such as the inside of a small mumetal container, aligned east-west.

Measuring in the field

The simplest way of making field measurements is to use a frequency meter set for period measurement directly on the output of the sensor. In most cases, designers will prefer to dedicate some specific hardware to carry out the conversions automatically.

Hardware configurations can vary from minimal, battery powered meter-display detectors through to complex, multiple sensor, computer controlled data collection systems. The following notes describe some useful techniques.

Meter or chart-recorder outputs

Low cost equipment can be made by using a semiconductor frequency-to-voltage converter such as the *LM2917*. A circuit for a portable, direct reading instrument is shown in **Fig. 2**.

Since the field strength is inversely proportional to frequency, the output is not linear but over the ±0.5 oersted range the non-linearity is modest and provides an acceptably spaced meter scale. At higher sensitivities over a more limited full scale range, the non linearity becomes increasingly neglegible and gives an almost evenly spread scale.

Where the converter is unable to handle the highest frequency output, simple binary division in a prescaler will bring the sensor output into an acceptable range.

As an alternative to the diode pump type of converter, a phase locked loop can also be configured to provide similar performance.

Digital heterodyning

If the full range of the sensor is not required, such as in ferrous material detection or the measurement of small field fluctuations, a technique of digital heterodyning is useful.

This is not a true heterodyne process but is similar when used over small frequency ranges. It is more akin to the production of

aliasses by undersampling and gives very high sensitivity to small signal fluctuations. This makes it useful for detecting remote moving ferrous objects or for measuring Earth field fluctuations during magnetic storm activity.

The technique requires a stable but adjustable source of clock pulses of similar frequency to the sensor output. These are used to undersample the sensor output and produce a much lower frequency square wave. One easy way to achieve this is to use the sensor output as the D-input of a D-type bistable and the clock source as the trigger input, **Fig. 3**.

The sensor is used in a fixed position and the clock signal is set to a frequency close to the sensor frequency. Output of the bistable is a square wave of frequency equal to the difference between sensor and clock frequencies, similar to a heterodyne mixer.

A small percentage change in the sensor frequency becomes a large percentage change in the bistable frequency. This can be converted to a voltage as before, for meter or chart recorder, but gives a large increase in apparent sensitivity without the need for high gain amplifiers.

The cmos oscillator above is more stable than most and is suitable for applications such as ferrous metal detectors. Some care is needed in decoupling both the oscillator and the sensor to prevent a tendency to frequency lock, if the highest sensitivity is required. However such an arrangement has successfully detected passing vehicles and a measure of its sensitivity can be obtained from the fact that it could pick up a motorcycle in the far lane of a three lane motorway from the grass verge.

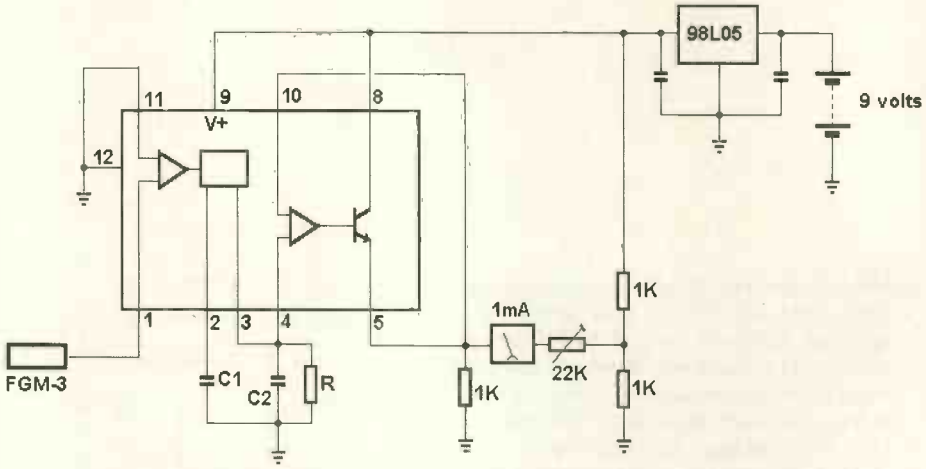

Fig. 2. Since the sensor provides an output whose period is proportional to magnetic field, adding a frequency-to-voltage converter produces a simple portable meter output instrument.

More critical applications of earth field or materials magnetometry need a more stable oscillator, such as a crystal controlled type, but a fixed frequency is normally adequate, since such instruments are not usually mobile.

The technique is equally applicable to ferrous object detection or counting of smaller objects passing on a conveyor belt, the sensitivity and range being adjusted to suit the individual system. In this context it is useful to remember that the field produced by a given magnetic moment falls off as the inverse cube of the distance – not the inverse square.

All of the above hardware approaches can be simulated by software in a computer or microcontroller, often resulting in minimal hardware to achieve sophisticated results.

Detecting the Earth's field

A block diagram of a modest earth field magnetometer, **Fig. 4**, uses the type of circuitry

Applying the sensor with computers and microcontrollers

The sensor's large output pulse gives considerable noise immunity permitting the use of transducers sited at long distances from the main system.

Interfacing is simple in that it requires only one bit of a digital input port per measurement channel, the technique being to count input pulses for a fixed period to determine the frequency of the incoming signal. From this, the field can be calculated.

Where faster response is needed, the time between successive like edges permits direct determination of period, from which again the field can be calculated. With microcontrollers, this usually presents no problem, but with systems using many interrupts or extensive multi-tasking it may be necessary to buffer the input signals to deal with the high data rate. However this usually means no more than the addition of a single triple-counter i/o chip – even for three-dimensional orientation systems.

For applications such as Earth field magnetometry, where readings may only be required at relatively long intervals, simple binary division with a 12 or 14 stage divider will reduce the input period to a level where data rate ceases to be a problem to the computer. Alternatively, in such applications where the field variation is extremely small, digital heterodyning with a stable oscillator will also reduce the period but simultaneously maintain the high sensitivity, in hertz/oersted, to field variations.

For applications needing absolute field magnitude without any orientation sensitivity, it is necessary to use three orthogonal sensors and exploit the fact that the sum of the squares of the three signals is constant regardless of orientation. Provided that the zero offsets, channel sensitivities and linearisation are appropriate to the required absolute sensitivity, this will permit free movement of the sensor head while measuring small changes in absolute field. If the sensor is in constant angular motion, advantage can be taken of this to provide some level of auto-calibration of zero offset and channel sensitivity.

Where the sensor can be permanently fixed, only one sensor is necessary, the zero offset being adjusted to suit the local ambient field strength. This technique is appropriate to fixed ferrous metal detection systems such as conveyor belt counters, vehicle and ship passage detectors and materials magnetometry. A limit to the range of such systems results from the fact that the Earth's field itself fluctuates at a low level continuously.

The effective range is a function of the size or likely magnetic moment of the objects being detected – ships generally giving a larger range than vehicles or hand guns. Appropriate filtering of the input frequency variations will enhance range.

Where extremely high sensitivity is required it may be possible to use two sensors in a gradiometer configuration to cancel out the micro-fluctuations of the Earth's field. However, this will not always increase range, since the gradiometer sensitivity falls off faster with range than the simple field sensor.

In this context, you should remember that the field produced at range by a magnetic moment falls off as the inverse cube of the range, so the gradiometer configuration will fall off as the inverse fourth power. However such systems may be useful as short range high sensitivity detectors and materials measurement systems. An example might be extremely small magnetic moment inert particles introduced into fluid flow systems for movement detection, such as chemical processing plants or animal internal fluid flow systems in medical research applications.

described above.

The sensor should be located in an east-west orientation and its mean frequency is measured. A crystal oscillator and binary divider are then selected to produce a frequency around 500Hz below the sensor frequency. The sensor signal and the divided clock are fed to a digital heterodyne circuit as described earlier.

Sensitivity of the *FGM-3* is such that this arrangement will give a swing of about 0 to 1000Hz for a variation in field of around ±500γ (1γ is 10^{-5} oersted). This gives enough headroom for most magnetic storms likely to be observed. The exact range can, if required, be calibrated as outlined earlier.

Output of the digital heterodyne can be taken to a voltage-to-frequency converter for chart recorder use or to a computer to store or plot the data in whatever form is appropriate. If the sensor is calibrated, the results can easily be converted to angular or azimuth variations by dividing by the local horizontal component. This can be measured by a north-south oriented calibrated sensor. Output is variation in radians, which is readily converted to the more suitable minutes of arc.

A magnetometer of this kind needs to be installed in a location far removed from potential sources of magnetic field interference. Such sources are mains transformers and motor vehicles. Fortunately the inverse cube law mentioned previously helps considerably with this aspect.

One exception to this rule can be exploited in the initial commissioning of the equipment. If difficulty is experienced in finding an appropriate combination of crystal and binary divider to nearly match the sensor output, in the magnetically quiet location needed, the strategic placement of a small ceramic magnet, at a suitable range, can be used to 'pull' the sensor frequency instead.

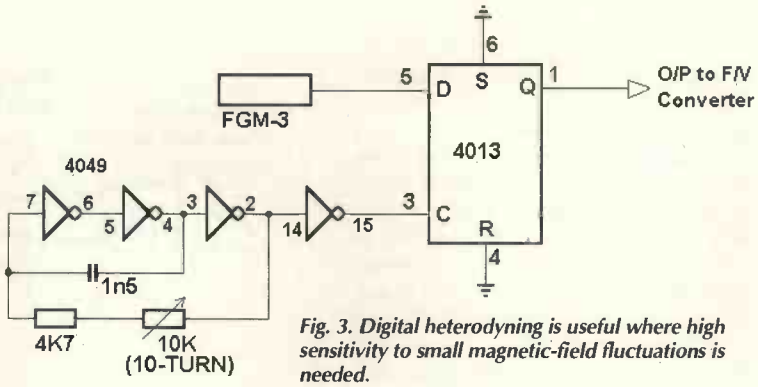

Fig. 3. Digital heterodyning is useful where high sensitivity to small magnetic-field fluctuations is needed.

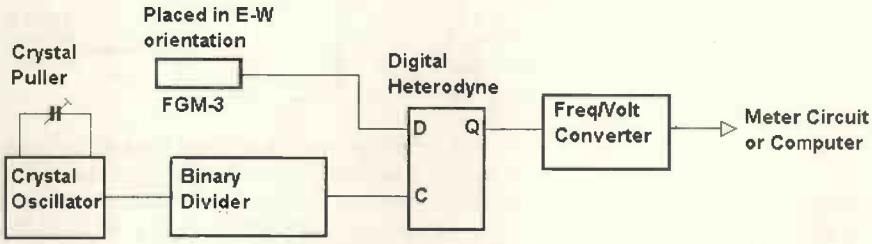

Fig. 4. Digital heterodyning is a useful building block for a magnetometer capable of measuring the Earth's magnetic field, but the oscillator needs to be stable.

Materials magnetometer

A setup with this kind of sensitivity is equally capable of being used as the measurement tool

FGM-3 three-terminal magnetic sensor – exclusive *Electronics World* special offer

Normally, the FGM-3 sensors sells at £16.45 but as a special introcuctory offer to EW+WW readers, Speake & Co is making up to two sensors per reader available at the 20% discount price of £13.16 each – fully inclusive of VAT and postage.

The FGM-3 is a three-terminal sensor – ground, +5V and output – that produces a frequency between 50kHz and 120kHz. The period of this output represents magneitc fields in the range ±50μT. At 25°C, temperature stability is 0.003% – a significant improvement over non-compensated Hall-effect devices. Send your postal-order or cheque payable to Speake & Co Ltd to Speake & Co Ltd, Elvicta Estate, Crickhowell, Powys NP8 1DF, tel. 01873 811281, fax 810958. Please note that any queries about this offer, or the FGM-3 sensor, should be directed to Speake & Co, not *EW+WW*.

Please note that this offer applies to overseas readers, but excluding those in Canada and North America.

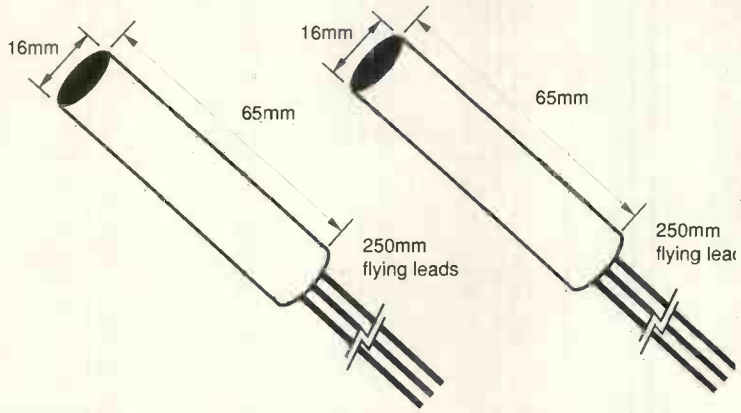

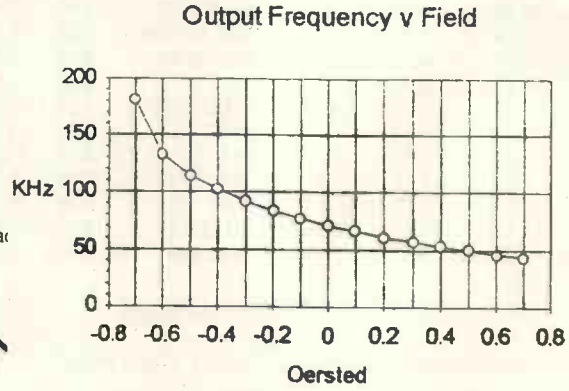

The FGM-3 outputs a frequency between 50kHz and 120kHz whose period represents magnetic fields in the range ±50μT and is highly stable with temperature.

in a classical Gauss-type materials magnetometer.

Figure 5 shows the usual configuration of this instrument. It comprises a controllable magnetising arrangement in the form of an air-cored solenoid in conjunction with a field measuring device. As shown, the arrangement is for low susceptibility specimens. Alternatively, an electromagnet type yoke can be used to reduce demagnetising effects with high susceptibility materials. The demagnetising field measured by this device is related to the magnetic induction in the specimen.

Taking the magnetising coil through positive and negative cycles large enough to reach saturation in the specimen produces a measured field displaying the hysteresis loop characteristics of the sample. To avoid shearing the hysteresis loop, it is necessary to use a specimen with a small demagnetising coefficient. Alternatively, use one with a known demagnetisation coefficient which can be corrected for, such as a cylinder.

For straightforward quantitative work distance *r* should be large compared to the magnetic length of the specimen if induction is to be measured. This requires high sensitivity in the detector. Comparative work and coercive force measurement are not so demanding.

Calibration is often carried out using a standard comparison sample of known demagnetisation coefficient and magnetic properties. The arrangement shown can also deal with the process of anhysteretic magnetisation if an alternating current source is superimposed on the dc supply. The more common ac-driven type of *B-H* loop tester has difficulty with this since it cannot measure static fields.

Similar arrangements are used by naval establishments under the name of fixed or portable ranges. These determine the efficiency of the various degaussing equipments used to maintain the 'magnetic hygiene' of vessels and items taken on board. The other side of this coin is that even more sensitive systems attempt to locate such vessels by detecting the magnetic anomaly caused by their presence.

The latter type of detector, however, needs to be insensitive to its orientation in order to avoid avoid the effects of the earth's field when it is in motion. Provided they can be made orientation insensitive, such detectors can be used as remote wreck-finders by divers. ■

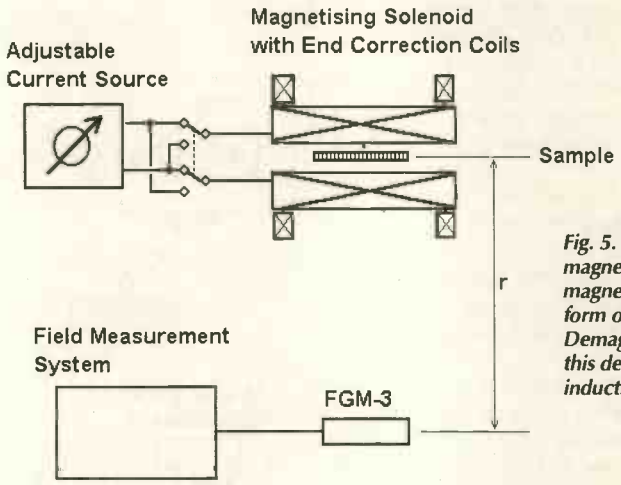

Fig. 5. At the heart of this materials magnetometer is a controllable magnetising arrangement in the form os an air-cored solenoid. Demagnetising field measured by this device relates to magnetic induction in the specimen.

KESTREL ELECTRONIC COMPONENTS LTD

☆ All items guaranteed to manufacturers' spec.
☆ Many other items available.

'Exclusive of V.A.T. and post and package'

	1+	100+		1+	100+
27C64-15	2.60	1.80	628128LP-85	8.30	7.20
27C128-15	2.40	1.80	62256LP10	3.00	2.70
27C256-15	2.20	1.70	6264LP-10	2.10	1.65
27C512-15	2.20	1.70	MM58274CN	4.90	3.75
27C010-15	3.95	2.80	ULN2003A	0.43	0.30
27C020-15	6.00	4.25	7805	0.32	0.25
27C040-15	8.60	6.45	MAX232	1.35	0.88
80C31-12	2.10	1.95	7406	0.35	0.23
8255AC-2	2.00	1.45	7407	0.35	0.23
Z80A CPU	1.80	1.00	74HC244	0.35	0.24
P1C16C84-04P	4.80	3.95	74HC245	0.35	0.24
75176BP	1.35	0.85	74HC373	0.35	0.25
68w PLCC skt	0.90	0.70	74HC374	0.32	0.25

74LS, 74HC, 74HCT Series available
Phone for full price list
All memory prices are fluctuating daily, please phone to confirm prices

178 Brighton Road, Purley, Surrey, England CR8 4HA
Tel: 0181-668 7522. Fax: 0181-668 4190.

CIRCLE NO. 113 ON REPLY CARD

LANGREX SUPPLIES LTD

PHONE 0181 684 1166

DISTRIBUTORS OF ELECTRONIC VALVES
TUBES, SEMICONDUCTORS AND I.C.S.
1 MAYO ROAD • CROYDON • SURREY CR0 2QP
24 HOUR EXPRESS MAIL ORDER SERVICE ON STOCK ITEMS

FAX 0181 684 3056

	£ p								
		EL86	2.75	PY500A	4.00	6BA7	5.00	6SK7	3.00
AZ31	5.00	EL91	3.00	PY800	1.50	6BE6	1.50	6SL7GT	4.50
CBL31	£12.50	EL95	2.00	PY801	1.50	6BH6	2.50	6SN7GT	4.50
CL33	10.00	EL360	18.50	QQV02-6	-12.00	6BJ6	2.25	6SS7	3.00
DY86/7	1.50	EL509	12.00	QQV03-10	5.00	6BN6	2.00	6U8A	1.50
E88CC Mull	8.50	EM34	15.00	QQV03-20A	15.00	6BQ7A	3.50	6V6GT	4.25
E180F	3.50	EM81	4.00	QQV06-40A	17.50	6BR7	6.00	6X4	3.00
EB10F	22.00	EM84	4.00	QV03-12	10.00	6BR8A	4.00	6X5GT	2.50
EABC80	2.00	EM87	4.00	U19	10.00	6BS7	6.00	12AT7	3.00
EB91	1.50	EN91 Mull	7.50	UABC80	1.50	6BW6	4.50	12AU7	3.00
EBF80	1.50	EY51	2.50	UBC41	4.00	6BW7	1.50	12AX7	3.50
EBF89	1.50	EY86	1.75	UBF89	£1.50	6BZ6	2.50	12AX7A GE	7.00
EBL31	15.00	EY88	1.75	UCH42	4.00	6C4	2.00	12BA6	2.50
ECC33	7.50	EZ80	3.50	UCH81	2.50	6C6	5.00	12BE6	2.50
ECC35	7.50	EZ81	3.50	UCL82	2.00	6CB6A	3.00	12BH7A GE	6.50
ECC81	3.00	GY501	3.00	UCL83	3.00	6CD6GA	5.00	12BY7A GE	7.00
ECC82	3.00	GZ32 Mull	8.50	UF89	4.00	6CL6	3.75	12E1	15.00
ECC83	3.50	GZ33	6.00	UL41	12.00	6CG7	7.50	12HG7/12GN7	6.50
ECC85	3.50	GZ34 GE	7.50	UL84	3.50	6CH6	6.00	30FL1/2	1.50
ECC88 Mull	6.00	GZ37	6.00	UY41	4.00	6CW4	8.00	30P19	2.50
ECC91	2.00	KT61	10.00	UY85	2.25	6D6	5.00	300B(PR)	110.00
ECF80	1.50	KT66	10.00	VR105/30	2.50	6DQ5 GE	17.50	572B	70.00
ECH35	3.50	KT88	15.00	VR150/30	2.50	6DQ6B	12.50	805	50.00
ECH42	3.50	N78	8.00	Z759	25.00	6EA8	3.50	807	5.75
ECH81	3.00	OA2	2.70	Z803U	25.00	6EH5	1.85	811A	18.50
ECL80	1.50	OB2	2.70	2D21	3.50	6F6	3.50	812A	65.00
ECL82	3.00	CC3	2.50	3B28	15.00	6FQ7	£7.50	813	27.50
ECL83	3.00	OD3	2.50	4CX250B STC	55.00	6GK6	4.00	833A	85.00
ECL86 Mull	3.50	PCF80	2.00	5R4GY	6.00	6H6	3.00	866A	25.00
ECLL800	25.00	PCF82	1.50	5U4G	5.25	6HS6	4.95	872A	20.00
EF37A	3.50	PCF86	2.50	5V4G	4.00	6J5	3.00	931A	25.00
EF39	2.75	PCF801	2.50	5Y3GT	2.50	6J6	3.00	2050A GE	10.00
EF40	5.00	PCF802	2.50	5Z3	4.00	6J7	4.00	5751	6.00
EF41	3.50	PCL82	2.00	5Z4GT	2.50	6JB6A GE	19.00	5763	10.00
EF42	4.50	PCL83	3.00	6AH6	4.00	6JE6C	20.00	5814A	5.00
EF80	1.50	PCL84	2.00	6AK5	1.50	6JS6C GE	17.50	5842	12.00
EF85	1.50	PCL85	2.50	6AL5	1.00	6K6GT	3.00	6080	7.50
EF86	7.50	PCL86	2.50	6AM6	2.00	6K7	4.00	6146B GE	15.00
EF91	2.00	PCL805	2.50	6AN5	5.00	6K8	4.00	6550A GE	20.00
EF92	2.00	PD500	6.00	6AN8A	4.50	6L6G	8.50	6883B GE	16.00
EF183	2.00	PL36	2.50	6AQ5	3.25	6L6GCSYL	12.50	7025 GE	7.00
EF184	2.00	PL81	1.75	6AR5	25.00	6L6GC Siemens	7.50	7027A GE	17.50
EL32	2.50	PL82	1.50	6AS6	3.50	6L6GC GE	12.50	7199	12.00
EL33	10.00	PL83	2.50	6AS7G	9.50	6L7	3.50	7360	25.00
EL34 Siemens	8.00	PL84	2.00	6AT6	2.00	6LQ6	20.00	7581A	15.00
EL36	4.00	PL504	2.50	6AU5GT	5.00	6Q7	4.00	7586	15.00
EL41	3.50	PL508	5.50	6AU6	2.50	6RHHB/6KNB	12.00	7587	23.00
ELL80	25.00	PL509/PL519	8.00	6AW8A	4.00	6SA7	3.00	7868	12.00
EL81	5.00	PL802	6.00	6B7	4.00	6SC7	3.00		
EL84	2.25	PY81	1.50	6B8	4.00	6SG7	2.50	Prices correct when going to press	
EL84 Mull	6.00	PY88	2.00	6BA6	1.50	6SJ7	3.00		

OPEN TO CALLERS MON-FRI 9AM-4PM, CLOSED SATURDAY.
OVER 6,000 TYPES AVAILABLE FROM STOCK. OBSOLETE ITEMS A SPECIALITY. QUOTATIONS FOR ANY TYPES NOT LISTED.
TERMS: CWO/VISA/ACCESS. POST & PACKING: 1-3 VALVES £2.00, 4-6 VALVES £3.00. ADD 17.5% VAT TO TOTAL INC. P&P.

CIRCLE NO. 114 ON REPLY CARD

£35* gets your hard disk back!

If you have never lost a file, never ran out of disk space or love re-installing software, don't read any further.

Backer® is a high performance back-up system designed specifically for the home user. For less than the price of most PC games, you can store up to 1.5Gbytes of data on a single VHS video tape, the equivalent of 3 CD-ROMs. Backer® utilises your existing video recorder to transfer data from your hard disk at up to 9Mbytes per minute, faster than many of the significantly more expensive tape streamers.

- Free up extra disk space by archiving less frequently used files
- Protect important files by keeping back-up copies
- Transfer data between PCs, copy hundreds of Megabytes quickly and easily
- Runs under Windows® in the background, allowing you to continue working with other applications
- Uses low cost standard video tapes
- Comprises of an expansion card and easy-to-use software
- State of the art sophisticated error correction ensures reliable operation
- Back-up selected files or the whole hard disk

Only **£34·95** Inc. VAT

Order now by ringing **01606 44244** quoting your Access or Visa number or by sending your cheque or postal order for **£37.45** (*£34.95 inc. VAT + P&P £2.50) to Danmere Technologies Ltd., Darland House, 44 Winnington Hill, Northwich, Cheshire CW8 1AU.

Distributor enquiries welcome.

Danmere

Backer®

The PC hard disk back-up system

CIRCLE NO. 115 ON REPLY CARD

Danmere Technologies Ltd., Darland House, 44 Winnington Hill, Northwich, Cheshire CW8 1AU.

The power to take BIG applications on board!

The NEW CMS Mini-Module

A UNIQUE LOW COST HIGHLY DEVELOPED MODULE

The Mini-Module is a small 100 x 118 mm all CMOS microcontroller containing a 32 bit microprocessor, 32 digital I/O, 4 analogue in, 1 analogue out, direct output to LCD displays, keyboard input, serial port, I^2C port, 512k EPROM space, 128K SRAM, RTC, Timers, plus much more. The board, on its own, or in combination with other peripheral cards, is capable of outstanding performance.

The programming environment is very simple to use. When connected to an IBM PC, programs can be written from most word processors and can be down loaded into the module. The module will compile the program into very fast executable code.

- PROGRAM IN C, C++ OR MODULA-2.
- CHOICE OF OPERATING SYSTEMS OS9 68K OR MINOS.
- IDEAL FOR ONE OFF APPLICATIONS
- EASY TO USE, VERY FAST DEVELOPMENT.

The Mini-Module provides the complete solution to many applications and can be customised or expanded to suit your needs.

CMS

Cambridge Microprocessor Systems Limited

Unit 17-18, Zone 'D', Chelmsford Road Ind. Est., Great Dunmow, Essex, UK. CM6 1XG
Phone 0371 875644 FAX 0371 876077

CIRCLE NO. 116 ON REPLY CARD

KENWOOD

TEST & MEASURING INSTRUMENTS A SUPERB RANGE OF OVER 100 QUALITY INSTRUMENTS.
Available from B.K. ELECTRONICS

FM-AM Signal Generators ★ Colour Pattern Generators ★ Video Signal Analyser ★ Video Timing Analyser ★ Video Noise Meter ★ Distortion Meter ★ Waveform Monitors ★ Vectorscopes ★ Audio Generators ★ Wow and Flutter Meters ★ Electronic Voltmeters ★ Digital Multimeters ★ Function Generators ★ Frequency Counters ★ Bus Analyser ★ Resistance Attenuator ★ Oscilloscopes ★ Fully Programmable Digital Storage Oscilloscopes ★ Regulated D.C. Power Supplies

A free, 50 page colour brochure, including price list, is available on request. Please make your request on company headed notepaper, by post or by fax, to:

B.K. ELECTRONICS
Unit 1 Comet Way, SOUTHEND-ON-SEA, Essex, SS2 6TR.
Tel: 01702-527572
Fax: 01702-420243

High Quality, Low Cost Instrumentation

■ **Multimeter MX-620 Combines:** Five DC volts ranges (200mV - 1000V) Five AC volts ranges (200mV - 750V) Six DC amps ranges (20microA - 20A) Six AC current ranges (20microA - 20A) Seven resistance ranges (200ohms - 200Mohms) Five frequency ranges (2KHz - 20MHz) Six capacitance ranges (2ninaF - 200microF) NPN/PNP Transistor hFE test, Diode test, Logic test, Built-in Continuity beeper, Safety test leads, Tilt Stand, Operator Manual and Carrying Case.

■ **Frequency Counter, Function Generator, Power Supply and Digital Multimeter. The All-in-One Instrument. Combines the following:** Frequency Counter: Range 1Hz to 100MHz, 70MHz to 1GHz Sensitivity 15mV rms on 100MHz range and 25mV rms up to 1GHz. Gate Time 10S, 1S, 100mS, 12.8S, 1.28S, 128mS, 12.8mS. 8 Digit LED display with Units Annunciators.
Function Generator: Output Sine, Square, Triangle, Skewed Sine Pulse, TTL Level Square. Frequency 0.02Hz to 2MHz, Output 0.1Vpp to 20Vpp, Linear and Log Sweep internal 20ms to 2S, External 100:1 (VCF) Output Impedance 50/600 ohms.
Power Supply: Triple Output, 1: 0 to 30V, 3A, 2: 15V, 1A Fixed. 3: 5V, 2A fixed. Ripple 1, 2 & 3 is 2mV max. Full Over Current Protection, 3½ Digital LCD Readout of Voltage and Current.
Digital Multimeter: Measurement Functions of DCV, ACV, ohms, DCA, ACA. Auto/Manual ranging, data hold function, 3½ Digit LCD display, basic accuracy +/– (0.5% + 2 dgts) Memory mode for Zero ohms. Imput impedance 10 Mohms.

I would like to purchase the following:
Quantity..... MX-620 Multimeters @ Special Introductory Price of £66 each
Quantity..... All-in-One @ Special Introductory Price of £390 each.
Prices include VAT and UK P&P.
I enclose a cheque/Postal Order made payable to Simextron Global.
Sent to Simextron Global, 1 Farm Row, Dunfermline, Fife KY12 0TX.
Name.....
Address .....
..... Post Code.....

CIRCLE NO. 117 ON REPLY CARD

Reference books to buy

For Audio Engineers

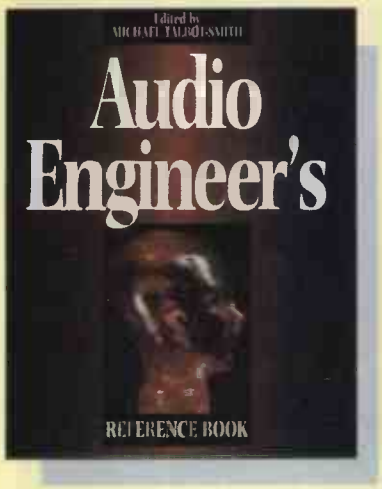

Subjects include

- Recording, microphones and loudspeakers
- Digital audio techniques
- Basic audio principles
- Acoustics and psychoacoustics
- Audio and television studios and their facilities
- Radio and telephony

- **Comprehensive – over 600 pages**
- **Written by leading authorities from the audio world**
- **Easy to read, compiled for maximum accessibility**
- **Concise and authoritative**
- **Covers topics from noise measurement to studio installation**

Invaluable reference work for anyone involved with audio – from broadcast consultant to serious enthusiast. *Audio Engineer's Reference Book* is written by an international team of experts and edited by Michael Talbot-Smith – previously a trainer of audio engineers at BBC Wood Norton and now a freelance audio consultant and technical writer.

For TV & Video Engineers

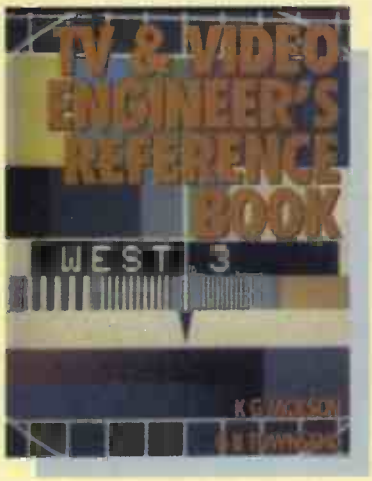

Subjects include

- Fundamentals of colour TV
- TV studios
- High definition TV
- Satellite broadcasting
- Distribution of broadband signals
- TV receiver servicing
- Video and audio recording and playback
- Teletext

- **Over sixty chapters on the latest techniques in video and television**
- **Up to date reference on EMC requirements, DBS and HDTV**
- **Easy-to-use reference, eminently suitable for students**
- **Topics range from materials and construction to medical and defence applications of television.**

The *TV & Video Engineer's Reference Book* will be of immense value to anyone involved with modern tv & video techniques – in particular broadcast engineers. The new format makes it an excellent reference for students. Edited by KG Jackson and GB Townsend from contributions written by acknowledged international experts.

Please supply me _____ copies of the
Audio Engineer's Reference Book,
(ISBN 0 7506 0386 0)
Fully-inclusive price – UK £62.50, Europe £68, Worldwide £78. Please add vat at local rate where applicable.

Please supply me _____ copies of the
TV & Video Engineer's Reference Book,
(ISBN 0 7506 1953 8)
Fully-inclusive price – UK £42.50, Europe £48.00, Worldwide £58.00, Please add vat at local rate where applicable.

Remittance enclosed £_____
Cheques should be made payable to Reed Business Publishing Group Ltd
Please return to: Jackie Lowe, Room L333, Quadrant House, The Quadrant, Sutton, Surrey, SM2 5AS
Please debit my credit card as follows:
Access/Master Barclay/Visa Amex Diners

Credit Card No. _____
Exp date
NAME (Please print) _____
ADDRESS _____
_____
_____
_____
POST CODE _____
DATE_____TEL_____

SIGNATURE

VAT RATES
6% Belgium, 25% Denmark, 5.5% France, 7% Germany, 4% Greece, 4% Italy, 3% Luxembourg, 6% Netherlands, 5% Portugal, 3% Spain.
FOR COMPANIES REGISTERED FOR VAT, PLEASE SUPPLY YOUR REGISTRATION NUMBER BELOW (customers outside the EEC should leave this part blank)

VAT NO._____
If in the UK please allow 28 days for delivery. All prices are correct at time of going to press but may be subject to change.
Please delete as appropriate. I do/do not wish to receive further details about books, journals and information services.

Business purchase: Please send me the book listed with an invoice. I will arrange for my company to pay the accompanying invoice within 30 days. I will attach my business card/letterhead and have signed the form below. Guarantee: If you are not completely satisfied, books may be returned within 30 days in a resalable condition for a full refund.

Credit card orders accepted by 'phone. Call 0181 652 3614

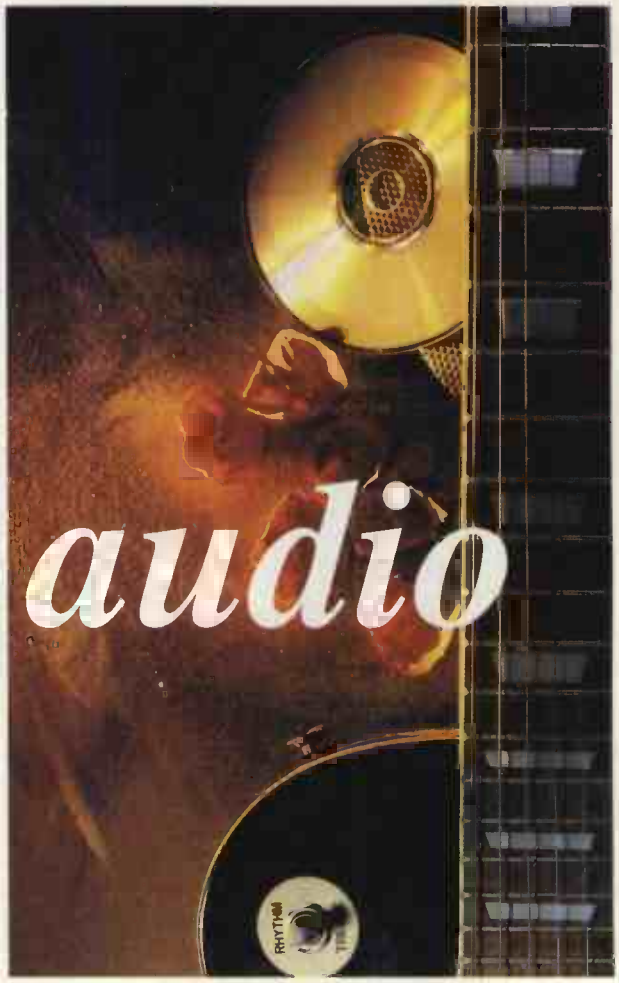

Controlling dynamic range

Based on a chopped attenuator, John Linsley-Hood's audio processor expands and compresses by around 26dB with very low thd.

In an ideal world, music, speech or drama – when recorded and replayed, would be reproduced in similar surroundings, with identical sound-level intensities. In practice of course, this ideal is rarely achievable.

When performing live, popular music the artists have to make themselves heard in competition with the audience. Some information may be lost during quiet passages, but generally, reproducing such music presents few problems in audibility.

At the other end of the loudness scale – for example plays – the contrast between loud and quiet may be an essential aspect of the dramatic content. In this case, realism depends on the quiet parts being heard as effectively as the loud. For this purpose, desirable dynamic range would be at least 50-60dB.

In the performance of 'classical' music – particularly with a large scale modern orchestra in a well-designed auditorium – sound pressure levels ('spl' is in decibels referred to 2×10^{-5}N/m^2) can range from less than 15dB to greater than 100dB.

In a domestic environment, the situation will not be as favourable. Background sound-levels of a quiet room are likely to be around 25dB, while the tolerance limit of family and neighbours may demand that sound-pressure levels of loud passages are held significantly lower than 100dB.

For listening in a car, the background noise level when travelling on the open road is at least 55dB, and higher when driving in urban traffic. This would be acceptable for listening to loud music but hopeless for a radio play or orchestral concert.

In reality, there are mitigating factors. In most radio broadcasts there is a degree of dynamic-range compression, as well as peak level limitation. This is introduced to avoid overloading the transmitter systems. In programme material transferred to tape, there will be a significant amount of inadvertent maximum recording level compression. This is an inherent characteristic of the magnetic tape record/replay system.

During the manufacture of vinyl records, a substantial amount of short-term peak recording level compression results from the recording engineer's manipulation of the level controls. This is needed to ensure that loud passages do not cause groove-to-groove breakthrough at recording levels. It is chosen so that quiet portions of the programme are adequately above the surface noise floor of the disc. For this reason there is a degree of dynamic range compression imposed both in the initial recording and in the user's subsequent copying on to cassette tape – often listened to in the car.

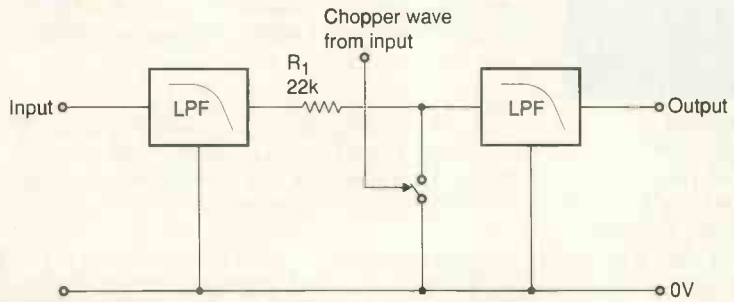

Fig. 1. Low-distortion, gain-controlled block based on a high-speed electronic switch. Over most of the audio range, distortion is just 0.005%. On and off durations of the switch are determined by an externally applied dc voltage.

CDs and dynamic range compression

In cds and, to a lesser extent, the digital compact cassette and Sony's Mini-Disk, digital signal processing has lowered the noise floor of recordings. It has extended the dynamic range available in the recording system to some 90dB. This range is even greater in some of the better machines.

Unfortunately, wide dynamic range recordings make unsatisfactory programme sources when the replay system is being listened to in a noisy environment such as an automobile, or when the listener has impaired hearing. Such situations benefit some form of dynamic range compression in the replay chain.

Conversely, if some form of external dynamic range control is available, this could equally well be used in more favourable conditions. One example is for expanding the range available from a standard vinyl disc, by making the loud passages louder or the quiet ones quieter – a process which would also reduce the audibility of the disc surface noise and turntable 'rumble'.

Controlling dynamic range

I described a low-distortion, gain-controlled block based on a high-speed electronic switch in *EW+WW*, April 1995. This switch, outlined in **Fig. 1** had on and off durations controlled by an externally applied dc voltage.

Using a switch in this way removes the transistor matching problems normally associated with high-performance attenuators. Over the

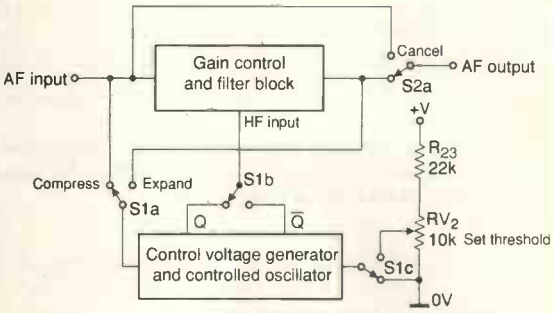

Fig. 2. Audio compression and expansion system based on a low-distortion switched attenuator.

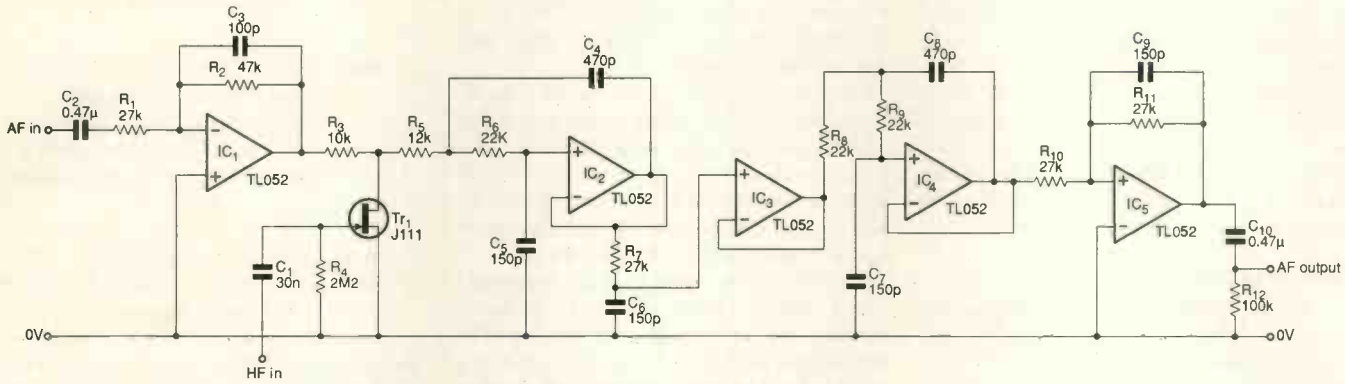

Fig. 3. Audio dynamic range controller incorporating a switched attenuator. The j-fet provides the attenuation, under control of square waves from oscillator, Fig. 4.

Fig. 4. Analogue signal conditioning provides a dc control voltage for the controlled oscillator based on a 4069 c-mos logic buffer.

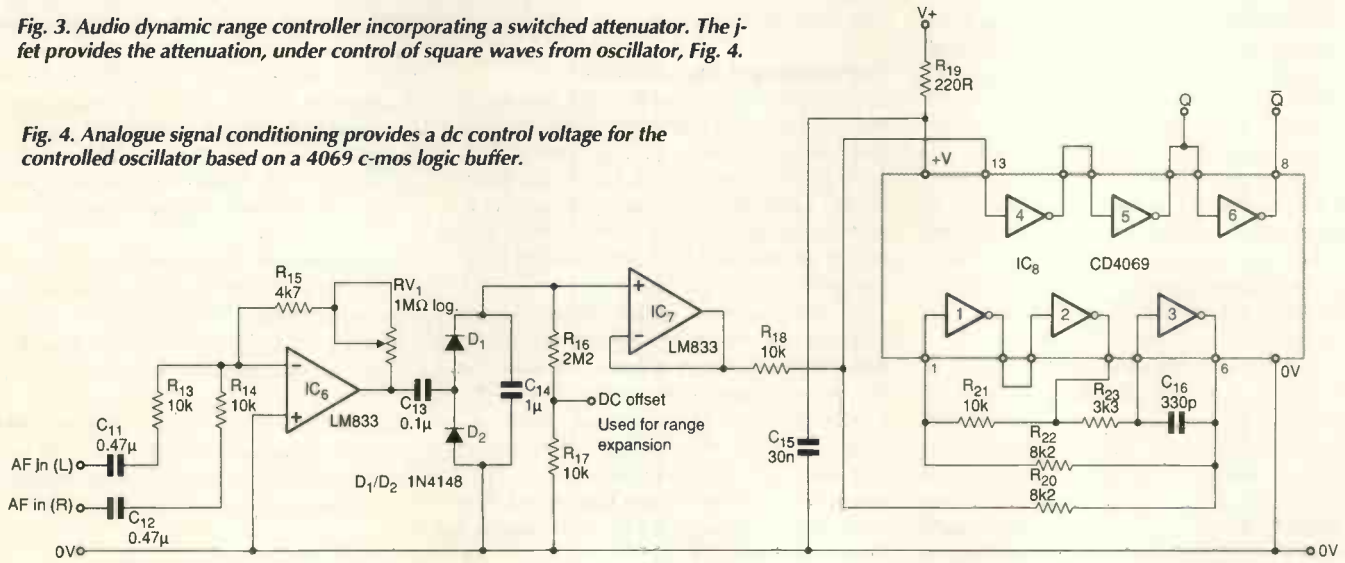

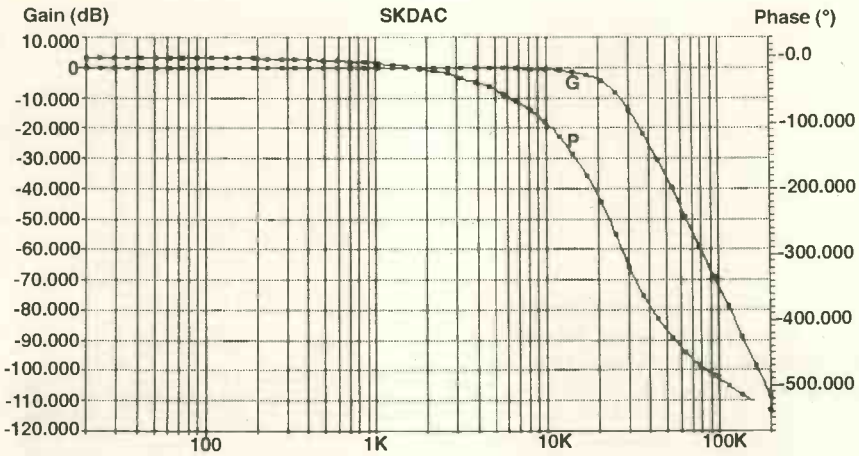

Fig. 5. Frequency response of two consecutive third-order Sallen and Key low-pass filter stages between the chopper stage and af output. The circuit gives about 90dB rejection of the switching waveform in the af output.

range 100Hz to 10kHz, the chopping attenuator achieves a thd figure in the region of 0.005% for a 1V rms input.

With this arrangement, **Fig. 2**, system gain can be caused to change rapidly in response to a control voltage derived from the audio signal level. This voltage can be derived either from the signal present at the output of the gain controlled block – if peak level compression is needed – or from the signal input, where dynamic-range expansion is required: there would otherwise be positive feedback around the control loop.

Figures 3 and **4** show the circuitry of the gain-control and filter block, and the control voltage and rectangular wave generator.

Overall system operation

The system operates in dynamic-range compression mode by using the chopper fet, Tr_1, to cut segments out of the audio signal waveform present at its drain electrode.

The duration of the chopped out segments becomes greater as the input control voltage fed to the oscillator becomes more positive. This happens as the size of the audio signal fed to IC_6 increases – an arrangement which reduces amplitude of the output signal.

The converse effect is obtained if the rectangular waveform generator is connected so that duration of the chopped out segments increases as signal size decreases. This effect occurs if drive signal to the gate of Tr_1 is taken from the oscillator $\bar{Q}$ output rather than the Q output.

Some form of threshold control, shown as RV_2 in Fig. 2, is necessary when the circuit is used in its dynamic-range expansion mode. It would otherwise be possible for the circuit to suppress low-level signals entirely, unless some residual input voltage is fed to the *CD4069* oscillator. Magnitude of this voltage can be chosen to set the minimum size for low signal-level transmission.

The 130kHz chopping frequency is well above the audible range, but it is necessary to remove notches due to the chopped out segments in order to recover the original distortion-free waveform. This is achieved by introducing two consecutive third-order Sallen and Key low-pass filter stages, $IC_{2,3}$ and $IC_{4,5}$. These sit between the chopper stage and audio-frequency output.

Frequency response of this circuit, **Fig. 5**, gives about 90dB (32,000:1) rejection of the switching waveform in the af output. In practice, it is likely that any detectable 130kHz signal present will be due to breakthrough by way of stray circuit capacitances. The circuit layout should take this into account.

It is necessary to prevent signal components within 20kHz of the chopping frequency reaching the input to the chopper fet. The input buffer amplifier, IC_1, is connected as a simple hf roll-off stage, with a –3dB point at 33kHz, for this purpose.

Implementing the controller

It is necessary to mount this unit in a metal enclosure to avoid interference with adjacent radio receivers. This occurs as a result of the fairly large hf signal voltage in the oscillator circuit, when the unit is used as an adjunct to an existing high-fidelity system. With this simple precaution, I have noticed no rf interference from my prototype.

For domestic use, a conventional IC stabilised ±15V mains operated power supply unit will provide all the necessary supplies. An led in series with the positive rail to the *CD4069* provides an 'on' warning light.

For use in car, the positive battery supply will need to be supplemented with a –12V feed to the op-amps. This is best provided by a pcb mounting dc-to-dc converter such as a Newport *NMF1212S*. ■

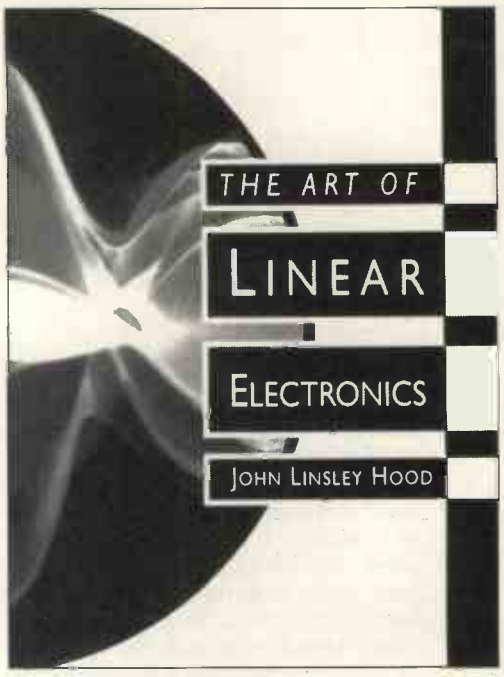

The Art of Linear Electronics – 10% *EW+WW* reader discount

While stocks last, *Electronics World & Wireless World* is offering John Linsley–Hood's book 'The Art of Linear Electronics' at the 10% discount price of £15.29 – instead of the normal retail price of £16.99.

'The Art of Linear Electronics' order – ISBN 0750608604 – contains electronic component symbols and circuit drawings; passive components; active components based on thermionic emission; active components based on semiconductors; practical semiconductor components; dc and low–frequency amplifiers; feedback, negative and positive; frequency response; modifying circuits and filters; audio amplifiers; low–frequency oscillators and waveform generators; tuned circuits; high–frequency amplifiers/oscillators; radio receiver circuitry; power supplies; noise and hum; test instruments and measurements.

This practical 340pp handbook gives a complete working knowledge of the basics and technology of linear electronics – with application examples in such fields as audio, radio instrumentation and television.

Send your order with a cheque made payable to Reed Business Publishing Group Ltd, to Jackie Lowe, Room L333, Quadrant House, The Quadrant, Sutton, Surrey, SM2 5AS

Surplus always wanted for cash!

THE *ORIGINAL* SURPLUS WONDERLAND!

THIS MONTH'S SELECTION FROM OUR VAST EVER CHANGING STOCKS

Surplus always wanted for cash!

LOW COST PC's - ALL EXPANDABLE - ALL PC COMPATIBLE

SPECIAL BUY
AT 286
40Mb HD + 3Mb Ram

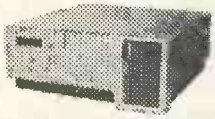

LIMITED QUANTITY only of these **12Mhz HI GRADE 286** systems Made in the USA to an industrial specification, the system was designed for *total reliability*. The compact case houses the motherboard, PSU and EGA video card with single **5¼" 1.2 Mb** floppy disk drive & **integral 40Mb hard disk drive** to the front. Real time clock with battery backup is provided as standard. Supplied in good used condition complete with **enhanced keyboard, 640k + 2Mb RAM, DOS 4.01** and **90 DAY Full Guarantee**. *Ready to Run !*
Order as **HIGRADE 286** ***ONLY £149.00*** (E)
CALL FOR QTY DISCOUNTS

Optional Fitted extras: VGA graphics card	£29.00
1.4Mb 3½" floppy disk drive (instead of 1.2 Mb)	£24.95
NE2000 Ethernet (thick, thin or twisted) network card	£49.00

PC SCOOP
COMPLETE COLOUR SYSTEM
ONLY £79.00

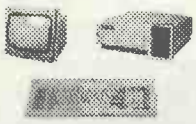

A massive bulk purchase enables us to bring you a **COMPLETE ready to run colour PC system at an unheard of price! The Display Electronics PC99 system** comprises of fully compatible and expandable XT PC with 256k of RAM, 5¼" 360k floppy disk drive, 12" **CGA colour monitor**, standard 84 key keyboard, MS DOS and all connecting cables - **just plug in and go !!** Ideal students, schools or anybody wishing to learn the world of PC's on an ultra low budget. **Don't miss this opportunity.** Good used condition - Fully guaranteed for 90 Days.
Order as **PC99COL** **£79.00** (E)

Optional Fitted extras: 640k RAM	£29.00
2nd floppy drive, specify 5¼" 360k or 3½" 720k	£29.95
Above prices for PC99 offer ONLY.	

FLOPPY DISK DRIVES 3½"- 8"

5¼" from £22.95 - 3½" from £24.95

Massive purchases of standard 5¼" and 3½" drives enables us to present prime product at industry beating low prices! All units (unless stated) are ***BRAND NEW*** or removed from often brand new equipment and are fully tested, aligned and shipped to you with a 90 day guarantee and operate from standard voltages and are of standard size. **All are IBM-PC compatible** (if 3½" supported on your PC).

3½" **Panasonic** JU363/4 720K or equivalent	£24.95(B)
3½" **Mitsubishi** MF355C-L. 1.4 Meg. Laptops only *	£36.95(B)
3½" **Mitsubishi** MF355C-D. 1.4 Meg. Non laptop	£29.95(B)
5¼" **Teac** FD-55GFR 1.2 Meg	£29.95(B)
5¼" **BRAND NEW Mitsubishi** MF501B 360K	£22.95(B)
* Data cable included in price.	
Shugart 800/801 8" SS refurbished & tested	£195.00(E)
Shugart 851 8" double sided refurbished & tested	£250.00(E)
Mitsubishi M2894-63 8" double sided *NEW*	£275.00(E)
Mitsubishi M2896-63-02U 8" DS slimline *NEW*	£285.00(E)

Dual 8" drives with 2 mbyte capacity housed in a smart case with built in power supply. **Ideal as exterior drives!** £499.00(F)

HARD DISK DRIVES

End of line purchase scoop! Brand new **NEC D2246** 8" 85 Mbyte of hard disk storage! **Full industry standard SMD interface.** Ultra hi speed data transfer and access time, replaces Fujitsu equivalent model. complete with manual. Only £299.00(E)

3½" **FUJI** FK-309-26 20mb MFM I/F RFE	£59.95(C)
3½" **CONNER** CP3024 20 mb IDE I/F (or equiv)RFE	£69.95(C)
3½" **CONNER** CP3044 40mb IDE I/F (or equiv.)RFE	£89.00(C)
3½" **RODIME** RO3057S 45mb SCSI I/F (Mac & Acorn)	£99.00(C)
5¼" **MINISCRIBE** 3425 20mb MFM I/F (or equiv.) RFE	£49.95(C)
5¼" **SEAGATE** ST-238R 30 mb RLL I/F Refurb	£69.95(C)
5¼" **CDC** 94205-51 40mb HH MFM I/F RFE tested	£69.95(C)
8" **FUJITSU** M2322K 160Mb SMD I/F RFE tested	£195.00(E)

Hard disc controllers for MFM , IDE, SCSI, RLL etc. **from £16.95**

THE AMAZING TELEBOX

Converts your colour monitor into a QUALITY COLOUR TV!!

TV SOUND & VIDEO TUNER!

The **TELEBOX** consists of an attractive fully cased mains powered unit, containing all electronics ready to plug into a host of video monitors made by makers such as **MICROVITEC, ATARI, SANYO, SONY, COMMODORE, PHILIPS, TATUNG, AMSTRAD** etc. The composite video output will also plug directly into most video recorders, allowing reception of TV channels not normally receivable on most television receivers* (TELEBOX MB). Push button controls on the front panel allow reception of 8 fully tuneable 'off air' UHF colour television channels. **TELEBOX MB** covers virtually all television frequencies VHF and UHF **including the HYPERBAND as used by most cable TV operators.** A composite video output is located on the rear panel for direct connection to most makes of monitor or desktop computer video systems. For complete compatibility - even for monitors without sound - an integral 4 watt audio amplifier and low level Hi Fi audio output are provided as standard.

TELEBOX ST for composite video input type monitors	£34.95
TELEBOX STL as ST but with integral speaker	£37.50
TELEBOX MB Multiband VHF/UHF/Cable/Hyperband tuner	£69.95

For overseas PAL versions state 5.5 or 6 mhz sound specification.
*For cable / hyperband reception Telebox MB should be connected to a cable type service. Shipping code on **all** Teleboxes is (B)

FANS & BLOWERS

MITSUBISHI MMF-D6D12DL 60x60x25 mm 12v DC	£4.95 10 / £42
MITSUBISHI MMF-09B12DH 92x92x25 mm 12v DC	£5.95 10 / £53
PANCAKE 12-3.5 92x92x18 mm 12v DC	£7.95 10 / £69
EX-EQUIP 120 x 38mm AC fans - tested specify 110 or 240 v	£6.95
EX-EQUIP 80 x 38mm AC fans - tested specify 110 or 240 v	£5.95
VERO rack mount 1U x 19" fan tray specify 110 or 240v	£45.95 (B)
IMHOF B26 1900 rack mnt 3U x 19" Blower 110/240v NEW	£79.95

Shipping on all fans (A). Blowers (B). ***50,000 Fans Ex Stock CALL***

IC's -TRANSISTORS - DIODES

OBSOLETE - SHORT SUPPLY - BULK

5,000,000 items EX STOCK

For ***MAJOR SAVINGS*** - Send SAE or CALL FOR LATEST LIST

VIDEO MONITOR SPECIALS

One of the highest specification monitors you will *ever* see - At this price - Don't miss it!!

Mitsubishi FA3415ETKL 14" SVGA **Multisync** monitor with fine 0.28 dot pitch tube and guaranteed resolution of 1024 x 768. A variety of inputs allows connection to a host of computers including **IBM PC's** in CGA, EGA, **VGA &** SVGA modes, **BBC, COMMODORE** (including Amiga 1200), **ARCHIMEDES** and **APPLE.** Many features: Etched faceplate, text switching and **LOW RADIATION MPR** specification. Full 90 day warranty.

Supplied in EXCELLENT little used condition.
Order as **MITS-SVGA** **Only £139**(E)

Tilt & Swivel Base £8.00 Leads for IBM PC £8.95 (A)
External Cables for other computers £ CALL

PHILIPS HCS35 (same style as CM8833) attractively styled 14" colour monitor with both **RGB and standard composite 15.625 Khz video inputs** via **SCART socket** and separate phono jacks. Integral audio **power amp and speaker** for all **audio visual uses.** Will connect direct to **Amiga and Atari** BBC computers. Ideal for all **monitoring / security** applications with **direct connection to most colour cameras.** High quality with many features such as front concealed flap controls, VCR correction button etc. Good used condition - fully tested with a 90 day guarantee
Dimensions: W14" x H12¾" x 15½" D. **Only £99** (E)

Special Offer **save £16.95** - Order TELEBOX ST & HCS35 together - giving you a quality colour TV & AV system for **Only £122.50** (E)

KME 10" high definition colour monitors. Nice tight 0.28" dot pitch for superb clarity and modern styling. Operates from any 15.625 khz sync RGB video source, with RGB analog and composite sync such as Atari, Commodore Amiga, Acorn Archimedes & BBC. Measures only 13½" x 12" x 11". **Only £125** (E)
Good used condition. 90 day guarantee.

KME 10" as above for PC EGA standard £145.00 (E)

PHILIPS HCS31 Ultra compact 9" colour video monitor with **standard composite 15.625 Khz video** input via SCART socket. Ideal for all monitoring / security applications. High quality, ex-equipment fully tested with a 90 day guarantee (possible minor screen burns). In attractive square black plastic case measuring W10" x H10" x 13½" D. Mains powered **Limited Quantity - Only £79.00 (D)**

20" 22" and 26" AV SPECIALS

Superbly made UK manufacture. PIL all solid state colour monitors, complete with composite video & optional sound inputs. Attractive teak style case. Perfect for Schools, Shops, Disco, Clubs, etc.In EXCELLENT little used condition with full 90 day guarantee.

20"....£135 22"....£155 26"....£185 (F)

DC POWER SUPPLIES

Virtually every type of power supply you can imagine.Over 10,000 Power Supplies Ex Stock Call for info / list.

SPECIAL INTEREST

MITS. FA3445ETKL 14" Industrial spec SVGA monitors	£245
Computar MCA1613APC 16mm auto iris lenses 'C' mount	£125
Seaward PAT 2000 dual voltage computerised PAT tester	£585
INTEL SBC 486/133SE Multibus 486 system. 8Mb Ram	£1200
Zeta 3220-05 A0 4 pen **HPGL** RS232 fast drum plotter	£1950
MOTOROLA VME Bus Boards & Components SAE / CALL	£POA
Trio 0-18 vdc linear, metered 30 amp bench PSU. . New	£470
Fujitsu M3041 600 LPM band printer	£1950
VG Electronics 1035 TELETEXT Decoding Margin Meter	£3750
Andrews LARGE 3.1 m Satellite Dish + mount (For Voyager!)	£950
KNS EMC / Line interference tester NEW	£1200
Thurlby LA 160B logic analyser	£375
GEC 1.5kw 115v 60hz power source	£950
Brush 2Kw 400 Hz 3 phase frequency converter	£850
Anton Pillar 75 kW 400 Hz 3 phase frequency converter	£POA
Newton Derby 70 KW 400 Hz 3 phase frequency converter	£POA
COMPONEDEX T1000 Portable TELEX tester NEW	£250
Sekonic SD 150H 18 channel digital Hybrid chart recorder	£1995
HP 7580A A1 8 pen HPGL high speed drum plotter	£1850
Densei MUD 0185AH 1KVa UPS system with batts NEW	£575

19" RACK CABINETS

Superb quality 6 foot 40U
Virtually New, Ultra Smart
Less than Half Price!

Top quality 19" rack cabinets made in UK by **Optima Enclosures Ltd.** Units feature designer, smoked acrylic lockable front door, full height lockable half louvered back door and louvered removable side panels. Fully adjustable internal fixing struts, ready punched for any configuration of equipment mounting plus ready mounted integral 12 way 13 amp socket switched mains distribution strip make these racks some of the **most versatile we have ever sold.** Racks may be stacked side by side and therefore require only two side panels to stand singly or in multiple bays.
Overall dimensions are: 77½" H x 32½" D x 22" W. **Order as:**

OPT Rack 1 Complete with removable side panels.	£335.00 (G)
OPT Rack 2 Rack, Less side panels	£225.00 (G)

32U - High Quality - All steel RakCab

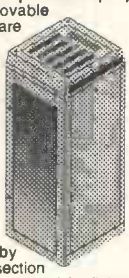

Made by Eurocraft Enclosures Ltd to the **highest possible spec,** rack features **all steel construction** with removable side, front and back doors. Front and back doors are **hinged for easy access** and all are lockable with five **secure 5 lever barrel locks.** The front door is constructed of double walled steel with a **'designer style'** smoked acrylic front panel to enable status indicators to be seen through the panel, yet remain unobtrusive. Internally the rack features full slotted reinforced vertical fixing members to **take the heaviest of 19" rack equipment.** The two movable vertical fixing struts (extras available) are pre punched for standard 'cage nuts'. A **mains distribution panel** internally mounted to the bottom rear, provides 8 x IEC 3 pin Euro sockets and 1 x 13 amp 3 pin **switched utility socket.** Overall ventilation is provided by fully louvered back door and double skinned top section with top and side louvres. The top panel may be removed for fitting of **integral fans** to the sub plate etc. Other features include: fitted castors and floor levelers, prepunched utility panel at lower rear for cable / connector access etc. Supplied in **excellent,** slightly used condition with keys. Colour Royal blue. External dimensions mm=1625H x 635D x 603 W. (64" H x 25" D x 23¾" W)

Sold at LESS than a third of makers price !!

A superb buy at only £195.00 (G)

Over 1000 racks in all sizes 19" 22" & 24" 3 to 44 U. Available from stock !! Call with your requirements.

TOUCH SCREEN SYSTEM

The ultimate in **'Touch Screen Technology'** made by the experts - ***MicroTouch*** - but sold at a **price below cost !!** System consists of a flat translucent glass laminated panel measuring 29.5 x 23.5 cm connected to an electronic controller PCB. The controller produces a **standard serial RS232** or TTL output which continuously gives simple serial data containing positional **X & Y** co-ordinates as to where a finger is touching the panel - as the finger moves, the data instantly changes. The X & Y information is given at an **incredible matrix resolution of 1024 x 1024** positions over the entire screen size !! A **host of available translation software** enables direct connection to a PC for a myriad of applications including: control panels, pointing devices, POS systems, controllers for the disabled or computer un-trained etc etc. Imagine using your finger with 'Windows', instead of a mouse !! (a driver is indeed available !) ***The applications for this amazing product are only limited by your imagination!!*** Complete system including Controller, Power Supply and Data supplied at an incredible price of only: ***£145.00*** (B)
Full MICROTOUCH Software Support Pack and Manuals for IBM compatible PC's £29.95 RFE - Tested

LOW COST RAM & CPU'S

INTEL 'ABOVE' Memory Expansion Board. Full length PC-XT and PC-AT compatible card with **2 Mbytes** of memory on board. Card is fully selectable for Expanded or Extended (286 processor and above) memory. **Full data and driver disks supplied.** RFE. Fully tested and guaranteed. Windows compatible.
Order as: ABOVE CARD **£59.95**(A1)

Half length 8 bit memory upgrade cards for PC AT XT expands memory either 256k or 512k in 64k steps. May also be used to fill in RAM above 640k DOS limit. Complete with data.
Order as: XT RAM UG. 256k. £32.95 *or* **512k £38.95** (A1)

SIMM SPECIALS

1 MB x 9 SIMM 9 chip 120ns		Only	£19.50 (A1)
1 MB x 9 SIMM 3 chip 80 ns	£23.50	or 70ns	£26.00 (A1)
1 MB x 9 SIMM 9 chip 80 ns	£22.50	or 70ns	£28.00 (A1)
4 MB 70 ns 72 pin SIMM *with parity*		Only	£105.00 (A1)
SPECIAL OFFER - INTEL 486-DX33 CPU			£79.99 (A1)

PHILIPS - LOW COST PRINTERS

A masterpiece of engineering, the **PHILIPS model NMS 1436 fully featured *MULTIMODE*** matrix printer packs a host of features into a unit weighing just over 4Kg and measuring only 40 x 12 x 28 Cm! Fully **Epson compatible** with adjustable paper tractor which accepts upto 9.5" sprocket fed paper and adjusts down to handle the smallest labels. The 9 needle head produces **Near Letter Quality in a host of fonts** and type sizes and in draft mode **'whizzes'** along at 120 characters per second! Many other features include most European character sets, **IBM, EPSON, MSX & Prestel** emulations.
Good used condition, IBM Cable £6.95 Only **£49.95** (B)

Issue 13 of *Display News* now available - send large SAE - PACKED with bargains!

DISPLAY -ELECTRONICS-

LONDON SHOP
Open Mon - Sat 9:00 - 5:30
215 Whitehorse Lane
South Norwood
On 68A Bus Route
Nr.Thornton Heath &
Selhurst Park SR Rail Stations

ALL MAIL & OFFICES
Open Mon-Fri 9.00-5:30
Dept WW. 32 Biggin Way
Upper Norwood
LONDON SE19 3XF

NEW DISTEL©
The Original
FREE On line Database
Info on 15,000+ stock items!
COMING SOON !!

ALL ☎ ENQUIRIES
0181 679 4414
FAX 0181 679 1927

Master Card VISA ESTABLISHED 25 YEARS

All prices for UK Mainland. UK customers add 17.5% VAT to TOTAL order amount. Minimum order £10. Bona Fide account orders accepted from Government, Schools, Universities and Local Authorities - minimum account order £50. Cheques over £100 are subject to 10 working days clearance. Carriage charges (A)=£3.00, (A1)=£4.00, (B)=£5.50, (C)=£8.50, (D)=£12.00, (E)=£15.00, (F)=£18.00, (G)=CALL. Allow approx 6 days for shipping - faster CALL. Scotland surcharge CALL. All goods supplied to our Standard Conditions of Sale and unless stated guaranteed for 90 days. All guarantees on a return to base basis. All rights reserved to change prices / specifications without prior notice. Orders subject to stock. Discounts for volume. Top CASH prices paid for surplus goods. All trademarks etc acknowledged. © Display Electronics 1995. E & O E. 6/5

CIRCLE NO. 118 ON REPLY CARD

GRANDATA LTD

K.P. HOUSE, UNIT 15, POP IN COMMERCIAL CENTRE,
SOUTHWAY, WEMBLEY, MIDDLESEX, ENGLAND HA9 0HB

Telephone: 0181-900 2329 Fax: 0181-903 6126

OPEN Monday to Saturday.

Times: Mon-Fri 9.00-5.30 Sat 9.00-2.00

PLEASE PHONE US FOR TYPE NOT LISTED HERE AS WE ARE HOLDING 30,000 ITEMS AND QUOTATIONS ARE GIVEN FOR LARGE QUANTITIES

Please send £1 P&P and VAT at 17.5%. Govt, Colleges, etc. Orders accepted. Please allow 7 days for delivery. Prices quoted are subject to stock availability and may be changed without notice. TV and video parts sold are replacement parts.

Access & Visa Card accepted

WE STOCK TV AND VIDEO SPARES, JAPANESE TRANSISTORS AND TDA SERIES. PLEASE RING US FOR FURTHER INFORMATION.

TRANSISTORS

Part	Price
AAY32	9p
AC107	40p
AC125	30p
AC126	30p
AC127	30p
AC128K	40p
AC141K	45p
AC176	22p
ACY18	48p
ACY19	48p
AD149	60p
AF125	50p
AF139	30p
AF239	30p
BB105B	18p
BB205B	24p
BC107	8p
BC108	8p
BC109	8p
BC109C	10p
BC140	20p
BC142	20p
BC143	20p
BC147	8p
BC149	8p
BC159	8p
BC160	30p
BC171	10p
BC172	10p
BC177	14p
BC178	14p
BC179	14p
BC182	7p
BC182L	7p
BC183	7p
BC183L	7p
BC184	7p
BC184L	7p
BC212	7p
BC212L	7p
BC213	7p
BC213L	7p
BC214	7p
BC214L	7p
BC237	7p
BC238	7p
BC239	7p
BC300	20p
BC301	20p
BC302	20p
BC303	20p
BC304	25p
BC327	7p
BC328	7p
BC337	7p
BC338	7p
BC441	28p
BC446	8p
BC477	18p
BC516	22p
BC537	25p
BC546	8p
BC547	8p
BC548	8p
BC549	8p
BC550	8p
BC556	8p
BC557	7p
BC558	8p
BC559	8p
BC560	8p
BC637	20p
BC639	20p
BC640	20p
BCY33	200p
BCY34	200p
BCY70	16p
BCY71	16p
BCY72	16p
BD115	30p
BD124P	50p
BD131	25p
BD132	25p
BD133	50p
BD135	20p
BD136	20p
BD137	20p
BD138	20p
BD139	20p
BD140	20p
BD144	90p
BD157	38p
BD166	30p
BD175	30p
BD177	30p
BD179	32p
BD181	45p
BD182	60p
BD184	60p
BD187	30p
BD201	33p
BD202	38p
BD203	42p
BD204	42p
BD222	31p
BD225	31p
BD232	31p
BD233	30p
BD234	32p
BD235	28p
BD236	30p
BD237	21p
BD238	24p
BD239	30p
BD240	40p
BD241A	40p
BD243A	50p
BD244	50p
BD245	50p
BD246A	50p

Part	Price
BD265	45p
BD267	45p
BD269	45p
BD278	50p
BD311	100p
BD314	100p
BD315	150p
BD317	150p
BD331	40p
BD332	40p
BD361	60p
BD362	60p
BD370	30p
BD371	30p
BD410	50p
BD433	28p
BD434	30p
BD435	31p
BD436	30p
BD437	28p
BD438	36p
BD439	40p
BD440	40p
BD441	40p
BD533	50p
BD534	38p
BD535	38p
BD536	38p
BD537	40p
BD538	40p
BD643	50p
BD645	50p
BD647	50p
BD649	50p
BD675	40p
BD676	40p
BD677	38p
BD678	40p
BD679	40p
BD680	40p
BD681	45p
BD682	45p
BD705	50p
BD707	50p
BD709	50p
BD711	50p
BD736	50p
BD826	50p
BD828	50p
BD839	55p
BD897	50p
BD899	50p
BD977	50p
BDX33	60p
BDX65	80p
BDW24	55p
BDW93	50p
BDW94	50p
BDY92	100p
BF137	35p
BF167	30p
BF181	18p
BF183	20p
BF195	7p
BF199	8p
BF200	16p
BF225	30p
BF240	16p
BF245	25p
BF254	15p
BF255	12p
BF256	18p
BF257	18p
BF259	18p
BF262	25p
BF270	18p
BF273	15p
BF311	21p
BF336	20p
BF337	20p
BF338	20p
BF362	30p
BF367	13p
BF371	17p
BF421	18p
BF422	21p
BF423	25p
BF455	12p
BF458	19p
BF462	50p
BF471	28p
BF472	28p
BF479	30p
BF494	16p
BF495	16p
BF595	16p
BF596	16p
BF615	30p
BF617	30p
BF760	40p
BF763	40p
BF870	22p
BF871	22p
BF960	38p
BF961	35p
BF964	38p
BFR90	85p
BFR91	99p
BFT43	30p
BFX29	20p
BFX84	20p
BFX85	20p
BFX87	15p
BFX88	15p
BFX89	60p
BFY50	14p
BFY51	14p
BFY52	14p
BFY56	25p
BFY64	25p

Part	Price
BFY90	45p
BLY48	85p
BR100	14p
BR103	37p
BR303	85p
BSS74	33p
BSX20	15p
BT100A	70p
BT106	180p
BT109	90p
BT119	100p
BT146	99p
BTY79	140p
BU105	80p
BU108	100p
BU109	80p
BU110	90p
BU111	100p
BU124	60p
BU126	65p
BU180	100p
BU184	100p
BU204	65p
BU205	70p
BU206	100p
BU208	70p
BU208A	75p
BU208AT	200p
BU208D	130p
BU209	90p
BU225	120p
BU226	120p
BU312	90p
BU325	55p
BU326A	75p
BU406	60p
BU406D	85p
BU407	55p
BU407D	75p
BU408	60p
BU408D	75p
BU409	85p
BU426A	70p
BU500	100p
BU505	90p
BU505D	90p
BU505DF	90p
BU506	100p
BU506D	70p
BU506DF	120p
BU508A	70p
BU508AF	95p
BU508D	75p
BU508DF	115p
BU508V	110p
BU508VF	100p
BU526	75p
BU536	100p
BU546	125p
BU608	120p
BU626	120p
BU705	130p
BU706DF	175p
BU706F	150p
BU801	70p
BU806	70p
BU807	60p
BU902	110p
BU903	110p
BU920	100p
BU922	110p
BU930	130p
BU2508A	130p
BU2508AF	130p
BU2508D	130p
BU2508DF	150p
BU2520AF	225p
BU2520DF	225p
BU2525AF	325p
BUH515	200p
BUT11AF	55p
BUT12	80p
BUT56A	75p
BU18	80p
BU18AF	80p
BUX10	150p
BUX11	200p
BUX12	150p
BUX20	350p
BUX21	450p
BUX22	450p
BUX37	220p
BUX40	210p
BUX41	200p
BUX42	200p
BUX47A	220p
BUX48A	150p
BUX80	180p
BUX84	50p
BUX85	50p
BUX86	30p
BUX87	50p
BUX98A	350p
BUY69A	200p
BUY71	250p
BUZ11	200p
BUZ71	75p
BUZ80	200p
BY448	20p
BYT11	25p
C106D	28p
IRF630	150p
J174	38p
J300	50p
MJ900	200p
MJ1000	200p
MJ1001	200p
MJ10012	300p
MJ15003	250p
MJ15004	300p

Part	Price
MJ2501	100p
MJ2955	55p
MJ3000	100p
MJ3001	100p
MJE29A	30p
MJE30A	30p
MJE340	25p
MJE350	80p
MJE520	30p
MP8112	45p
MPSA05	15p
MPSA06	15p
MPSA13	15p
MPSA20	15p
MPSA42	15p
MPSA43	15p
MPSA70	15p
MPSA92	20p
MPSA93	20p
MR510	35p
MR856	36p
OC28	350p
OC29	250p
OC35	350p
OC36	250p
OC45	50p
OC200	180p
R2008B	100p
R2010B	100p
S2000A3	175p
S2000AF	175p
S2055A	175p
S2055AF	200p
S2530A	100p
S2800M	72p
TIP29	15p
TIP29A	22p
TIP29C	25p
TIP29E	40p
TIP30	25p
TIP30C	25p
TIP31A	22p
TIP31C	27p
TIP32	24p
TIP32A	21p
TIP32C	28p
TIP33	50p
TIP33C	60p
TIP34	50p
TIP34C	60p
TIP35C	65p
TIP36C	65p
TIP41A	20p
TIP41C	22p
TIP42A	20p
TIP42C	22p
TIP47	40p
TIP48	40p
TIP50	60p
TIP51	80p
TIP52	80p
TIP54	85p
TIP105	65p
TIP106	65p
TIP107	65p
TIP110	40p
TIP111	40p
TIP112	35p
TIP112H	50p
TIP115	30p
TIP116	30p
TIP117	30p
TIP120	37p
TIP121	35p
TIP122	30p
TIP125	30p
TIP126	40p
TIP127	35p
TIP130	30p
TIP131	30p
TIP132	30p
TIP141	65p
TIP142	75p
TIP145	50p
TIP146	70p
TIP147	80p
TIP150	90p
TIP151	60p
TIP2955	42p
TIP3055	42p
TIPL760	100p
TIPL763A	200p
TIPL791A	80p
TIS61	15p
TIS90	15p
TIS93	20p
ZTX107	11p
ZTX108	11p
ZTX109	12p
ZTX212	20p
ZTX300	10p
ZTX301	16p
ZTX302	10p
ZTX303	20p
ZTX304	10p
ZTX320	20p
ZTX501	13p
ZTX502	10p
ZTX503	18p
ZTX504	25p
2N696	26p
2N697	22p
2N698	40p
2N78	22p
2N914	28p
2N930	18p
2N1131	28p
2N1132	28p
2N1613	24p
2N1711	24p
2N1893	30p

Part	Price
2N2102	50p
2N2218A	24p
2N2219	24p
2N2221	23p
2N2222	23p
2N2369	15p
2N2484	15p
2N2646	40p
2N2904	20p
2N2905	20p
2N2906	18p
2N2907	18p
2N3019	28p
2N3053	18p
2N3054	40p
2N3055	38p
2N3055H	50p
2N3442	85p
2N3702	9p
2N3703	9p
2N3704	9p
2N3705	9p
2N3706	9p
2N3707	9p
2N3710	12p
2N3711	12p
2N3771	85p
2N3772	90p
2N3773	100p
2N3799	18p
2N3819	29p
2N3903	11p
2N3906	11p
2N4031	25p
2N4401	12p
2N4403	12p
2N5061	20p
2N5088	20p
2N5192	50p
2N5241	500p
2N5245	45p
2N5294	30p
2N5296	30p
2N5448	12p
2N6107	40p
2N6292	40p
2N6385	120p
2N6403	160p

RECTIFIER DIODES

Part	Price
BY127	8p
BY133	8p
BY164	40p
BY179	35p
BY184	32p
BY206	11p
BY207	9p
BY227	19p
BY228	28p
BY298	15p
BY299	18p
BY448	20p
BYX10	15p
BYX55/600	25p
BYX70/500	
OA47	10p
OA91	10p
OA202	10p
IN4001	3p
IN4002	3p
IN4003	3p
IN4004	3p
IN4005	3p
IN4006	3p
IN4007	4p
IN4148	2p
IN5400	9p
IN5401	8p
IN5402	8p
IN5403	8p
IN5404	8p
IN5405	11p
IN5406	12p
IN5407	12p
IN5408	12p
RGP15	25p
RGP30	16p
SKE4F2/06	60p
SKE4F2/08	80p
SKE4F2/10	100p
SR2M	60p

I.C. SOCKETS

Part	Price
8 PIN	5p
14PIN	6p
16PIN	7p
18PIN	10p
20PIN	12p
22PIN	13p
24PIN	14p
28PIN	16p
40PIN	18p

ZENERS

Part	Price
400 mWatts 2V7 to 39V	5p
1.3 Watts 2V7 to 39V	9p

VOLTAGE REGULATORS

Part	Price
7805	25p
7806	25p
7808	25p
7812	25p

Part	Price
7815	25p
7818	25p
7824	25p
7905	25p
7906	30p
7908	30p
7912	30p
7915	30p
7918	30p
7924	30p
78L05	24p
78L08	24p
78L12	24p
78L15	24p
78L18	24p
78L24	24p
79L05	35p
79L08	35p
79L12	35p
79L15	35p
LM309K	100p
LM317T	100p
LM323K	350p
78H08KC	800p
79H12KC	700p
79HGKC	800p

LEDs

Part	Price
3mm	
RED	5p
YELLOW	8p
GREEN	8p
5mm	
RED	5p
YELLOW	8p
GREEN	8p

RECTANGULAR LEDs

Part	Price
5mm × 2.5mm	
RED	5p
YELLOW	8p
GREEN	8p

OPTO COUPLERS

Part	Price
4N37	58p
4N38	68p

BRIDGE RECTIFIERS

Part	Price
W005	16p
1A/50V	
W01	18p
1A/100V	
W02	19p
1A/200V	
W04	21p
1A/400V	
W06	23p
1A/600V	
W08	28p
1A/800V	
BR81D	33p
2A/100V	
BR82D	33p
2A/200V	
BR84D	37p
2A/400V	
BR86D	43p
2A/600V	
BR88D	43p
2A/800V	
BR32	43p
2A/200V	
BR34	43p
2A/400V	
BR36	44p
2A/600V	
BR62	80p
6A/200V	
BR64	72p
6A/400V	
BR251	150p
25A/100V	
BR252	165p
25A/200V	
BR254	185p
25A/400V	
BR256	200p
25A/600V	
BR258	240p
25A/800V	
BR351	185p
35V/100V	
BR352	200p
35V/200V	
BR354	220p
35V/400V	
BR356	230p
35V/600V	
BR358	260p
35V/800V	
BY164	
1.5A/100V	40p
BY176	
1.5A/800V	40p

TRIACS

Part	Price
TIC206D	60p
4A/400V	
TIC225D	69p
6A/400V	
TIC226D	68p
8A/400V	

Part	Price
TIC236D	85p
12A/400V	
TIC246D	105p
16A/400V	
TIC253D	190p
20A/400V	
TIC263D	205p
25A/400V	

THYRISTORS

Part	Price
2N5061	20p
0.8A/60V	
TIC116C	59p
8A/300V	
TIC116D	70p
8A/400V	
TIC126D	75p
12A/400V	
TIC126M	90p
12A/600V	
C106D	28p
4A/400V	
BR103	37p
BR303	85p
BT106	180p
BT119	100p
17088	200p
17089	200p
17127	200p
15/80H	230p
15/85R	230p
SG264	800p
SG613	1500p

COMPUTER ICs

Part	Price
Z80ACPU	100p
Z80ADMA	200p
Z80ACTC	140p
Z80ASIO-1	210p
Z80ASIO-2	210p
75107	65p
75110	75p
75113	100p
75122	110p
75154	100p
75162	700p
75182	95p
75183	95p
75195	185p
2114	150p
2532	200p
2716	100p
2732	200p
2732A	220p
2764	150p
27C64	200p
27128	150p
27256-25	150p
27512	300p
4116	40p
4164-15	80p
4164-12	90p
41256-15	80p
41256-12	100p
41256-10	110p
41464-12	150p
6116	80p
6264-10	210p
62256-12	300p
6502A	360p
65C02	930p
6522	280p
6800	210p
6802	220p
680	500p
36808	500p
6809	500p
6810	150p
6818	380p
6821	130p
6840	290p
6845	200p
6850	90p
8085A	300p
8086	500p
8088	480p
8156	300p
8224	240p
8226	240p
8250	750p
8251	200p
8253	160p
8257	220p
8271	3400p
8279	270p
8283	400p
8284	440p
8287	260p
8288	650p
8748	700p
8755	800p
8T26	95p
8T28	110p

LINEAR ICs

Part	Price
AN203	210p
AN210	165p
AN214Q	170p
AN228	280p
AN252	150p
AN259	250p
AN262	140p
AN271	230p
AN274	250p
AN301	330p
AN303	250p
AN304	360p

Part	Price
AN315	210p
AN316	350p
AN360	100p
AN362	140p
AN366	150p
AN610	160p
AN3312	350p
AN3821K	600p
AN3822K	600p
AN3990K	300p
AN3991K	400p
AN5025	250p
AN5033	400p
AN5132	250p
AN5150	400p
AN5151	600p
AN5215	100p
AN5256	150p
AN5262	175p
AN5265	80p
AN5352	600p
AN5411	450p
AN5421	150p
AN5429	420p
AN5512	100p
AN5515	160p
AN5520	550p
AN5521	100p
AN5612	200p
AN5613	200p
AN5615	300p
AN5620	250p
AN5622	275p
AN5625	400p
AN5712	180p
AN5722	140p
AN5730	160p
AN5732	120p
AN5753	130p
AN5763	450p
AN5790	240p
AN5791	225p
AN5836	450p
AN5900	130p
AN6135	120p
AN6247	200p
AN6270	400p
AN6300	600p
AN6306	380p
AN6320	180p
AN6332	320p
AN6341	200p
AN6344	440p
AN6350	610p
AN6359	500p
AN6360	320p
AN6362	400p
AN6371	350p
AN6387	480p
AN6884	200p
AN7105	170p
AN7110	75p
AN7114	120p
AN7115	110p
AN7116	90p
AN7120	100p
AN7130	75p
AN7140	170p
AN7145	195p
AN7146	210p
AN7154	180p
AN7156	240p
AN7168	200p
AN7178	180p
AN7222	75p
AN7254	150p
AN7256	250p
AN7310	60p
AN7311	90p
AN7410	150p
AY3-1015	290p
AY3-1270	800p
AY3-1350	450p
AY3-8910	360p
AY3-8912	400p
BA301	55p
BA311	80p
BA313	60p
BA333	80p
BA401	60p
BA402	50p
BA511	145p
BA514	160p
BA516	150p
BA521	100p
BA524	240p
BA526	180p
BA527	95p
BA532	100p
BA534	220p
BA536	150p
BA546	160p
BA612	120p
BA656	110p
BA658	350p
BA684	400p
BA685	400p
BA1310	160p
BA1320	75p
BA1330	120p
BA1360	160p
BA4403	220p
BA5101	350p
BA5102	140p
BA5204	200p
BA5402	180p
BA5406	180p
BA5408	180p
BA6104	250p
BA6208	175p

Part	Price
BA6209	85p
BA6304	120p
BA6305	140p
BA6410	220p
BA6411	250p
BA6993	150p
BA7001	150p
BA7004	200p
BA7007	200p
BA7021	180p
BA7022	350p
BA7751LS	150p
BA7752	250p
BA7755	150p
BA7767AS	155p
CA3011	110p
CA3048	190p
CA3052	190p
CA3054	95p
CA3085	135p
CA3088E	200p
CA3089E	150p
CA3090Q	250p
CA3130S	100p
CA3134E	280p
CA3140E	38p
CA3160	85p
CA3189E	230p
CA3193E	230p
CA3260E	170p
CA3290E	150p
CX108	950p
CX136	600p
CX139A	750p
CX141	750p
CX145	725p
CX150B	325p
CX175	325p
CX187	825p
CX804A	775p
CX867	575p
CX868	525p
CX877	300p
HA1125	120p
HA1197	130p
HA1199	130p
HA1319	200p
HA1338	300p
HA1339A	350p
HA1377	120p
HA1388	320p
HA1389	210p
HA1392	120p
HA1394	170p
HA1397	200p
HA1398	240p
HA11219	280p
HA11221	180p
HA11225	130p
HA11235	120p
HA11251	190p
HA11423	140p
HA11724	650p
HA12002	220p
HA12003	250p
HA12005	180p
HA12017	100p
HA13001	110p
HA13002	200p
HA13006	400p
HA13007	400p
HA13108	350p
HA13412	600p
HA13432	400p
HA17524	250p
ICL7106	650p
ICL7660	240p
KA2102	150p
KA2130	150p
KA2206	150p
KA2209	125p
KA2210	230p
KA2212	80p
KA2213	130p
KA2214	150p
KA2261	100p
KA2263	100p
KA2264	100p
KA2284	100p
KA2401	150p
KA2412	350p
KA2912	125p
KA2914A	300p
LA1130	240p
LA1150	150p
LA1185	150p
LA1201	75p
LA1210	140p
LA1222	80p
LA1230	130p
LA1364	200p
LA1365	120p
LA1368	220p
LA1385	170p
LA2000	150p
LA2101	270p
LA2200	190p
LA3160	120p
LA3210	65p
LA3300	140p
LA3301	110p
LA3361	100p
LA3375	300p
LA4030	180p
LA4031	140p
LA4032	140p
LA4051	160p
LA4100	85p
LA4101	80p
LA4102	100p

Part	Price
LA4110	120p
LA4120	270p
LA4140	60p
LA4160	100p
LA4182	180p
LA4190	300p
LA4192	140p
LA4200	130p
LA4201	120p
LA4260	230p
LA4261	300p
LA4270	300p
LA4420	140p
LA4422	130p
LA4430	130p
LA4440	150p
LA4445	150p
LA4460	120p
LA4461	120p
LA4500	200p
LA4505	220p
LA4508	200p
LA4510	100p
LA4520	170p
LA4550	200p
LA4555	120p
LA4570	130p
LA5112	200p
LA5523	150p
LA5527	150p
LA5700	300p
LA7011	220p
LA7033	400p
LA7042	280p
LA7046	300p
LA7224	150p
LA7505	250p
LA7507	250p
LA7520	200p
LA7620	500p
LA7800	90p
LA7801	100p
LA7802	300p
LA7806	260p
LA7808	250p
LA7820	100p
LA7823	200p
LA7910	150p
LA7940	200p
LC7131	260p
LC7132	400p
LC7137	450p
LF347	110p
LF353	48p
LF355	60p
LF357	70p
LF398	300p
LM301	26p
LM311	35p
LM319	165p
LM324	30p
LM335Z	120p
LM339	35p
LM348	50p
LM358	45p
LM380	80p
LM381	150p
LM382	130p
LM386	60p
LM387	100p
LM393	45p
LM431	50p
LM710	45p
LM723	40p
LM741DIL	18p
LM741MET	45p
LM747	55p
LM1889	300p
LM1894N	200p
LM3900	40p
LM3909	100p
LM3914	160p
LM3915	160p
LM3916	270p
L200	200p
M491BB1	500p
M494B1	700p
M50115P	320p
M50117P	500p
M50119P	525p
M50784	300p
M50786	500p
M50790	600p
M51161	300p
M51381P	200p
M51387P	800p
M51544	150p
M51848	150p
M54523P	200p
M54563P	200p
M58484	500p
M51516	260p
M51518	200p
MB3712	140p
MB3713	130p
MB3714	270p
MB3715	250p
MB3722	280p
MB3730	160p
MB3731	220p
MB3756	160p
MB3759	200p
MB8719	360p
MC1455	45p
MC1496	65p
MC3401	45p
NE555	20p
NE556	40p
NE558	80p
NE565	110p

CIRCLE NO. 119 ON REPLY CARD

CIRCUIT IDEAS

Do you have an original circuit idea for publication? We are giving £100 cash for the month's top design. Additional authors will receive £25 cash for each circuit idea published. We are looking for ingenuity in the use of modern components.

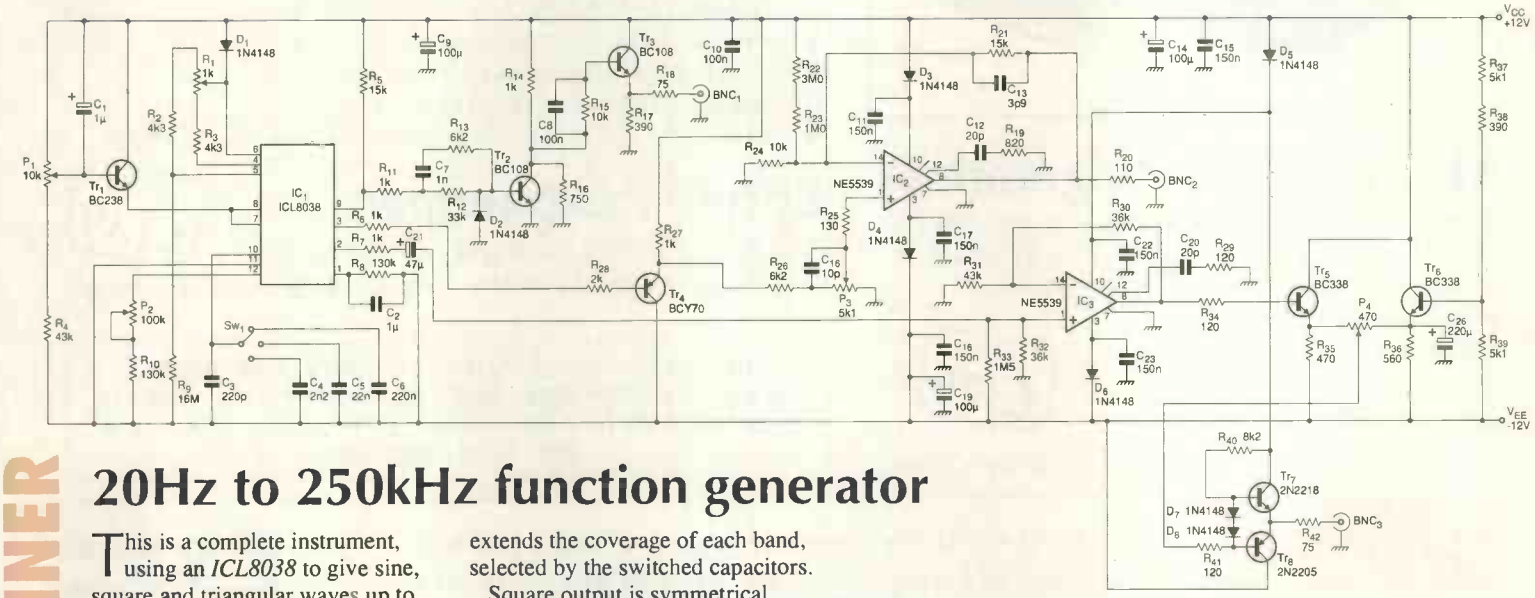

Function generator using the ICL8038 to give sine, triangle and square outputs from 20Hz-250kHz.

£100 WINNER

20Hz to 250kHz function generator

This is a complete instrument, using an *ICL8038* to give sine, square and triangular waves up to 250kHz in four ranges, and can be made to operate down to 5Hz.

At the core of the circuit is the *8038* IC, whose frequency of operation is set by the linear pot. P_1 and the switched capacitors $C_{3,4,5,6}$. Resistors $R_{1,2,3,9}$ and the pot. R_1 set the bias on the *8038* internal charge pumps, R_1 being used to achieve symmetry of the output waveform and P_2 and R_{10} adjusted for minimum distortion. Diode D_1 extends the coverage of each band, selected by the switched capacitors.

Square output is symmetrical about zero volts and is not, therefore, useful as a ttl drive; Tr_2 is used as a level shifter and Tr_3 as an output emitter follower. *RC* components $R_{13,15}$ and $C_{7,8}$ improve rise and fall times.

The triangle output of the ic is taken to emitter follower Tr_4 and then to a high-frequency op-amp, the *NE5539*, which has a 500MHz bandwidth, biased to zero by $R_{22,23}$ and having a gain of 2.5. The sprinkling of 150pF capacitors reduces the severity of interaction between triangle and sine outputs.

Sine output is ac-coupled to a further *NE5539*, which drives the two followers to obtain an output symmetrical about zero, set by P_4. This output drives the output stage.

Emil Vladkov
Sofia University
Sofia
Bulgaria

YOU COULD BE USING A 1GHz SPECTRUM ANALYSER ADAPTOR!

Got a good idea? Then this Thurlby-Thandar Instruments TSA1000 spectrum analyser adaptor could be yours.

Covering the frequency range 400kHz to over 1GHz with a logarithmic display range of 70dB ±1.5dB, it turns a basic oscilloscope into a precision spectrum analyser with digital readout calibration.

Recognising the importance of good design, **TTI will be giving away one of these excellent instruments every six months** to the best circuit idea published in the preceding period until further notice. **This incentive will be in addition to our £100 monthly star author's fee, together with £25 for all other ideas published.**

Our judging criteria are ingenuity and originality in the use of modern components – with simplicity particularly valued.

Programming Solutions

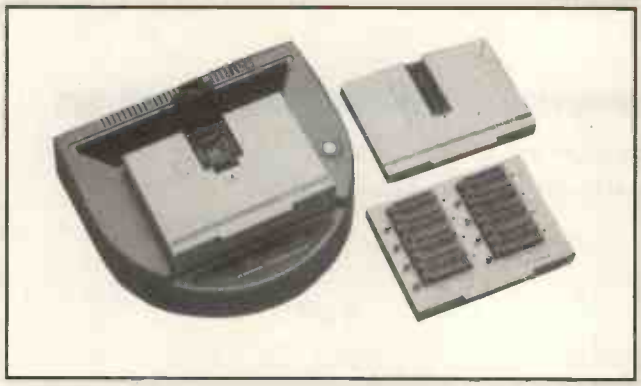

Universal Programmer

ONLY £595

- Uses standard pc printer port works with notebook and handbook pc's
- Pin driver expansion can drive up to 256 pins.
- Supports over 2000 IC's – 3 and 5 volt devices. EPROMs, E²PROMs, Bipolars, Flash, Serial EPROMs over 150 microcontrollers, WSI/Philips PSDs, PLDs, EPLDs, PEELs, PALs, GALs, FPGAs including MACH, MAX, MAPL & Xilinx parts
- Universal DIL (up to 48 pins), PLCC and gang PACs
- Powerful full colour menu driven software.
- Approved by AMD, TI, NatSemi, etc...
- Tests TTL, CMOS and SRAM devices (including SIMMS)

Multi-Device Programmer

- EPROMs, E²PROMs, Flash EPROMs, Serial E²PROMs, PLDs, GALs, PEELs, EPLDs, MACHs & WSI PSDs Micros – Intel, Microchip, Motorola, Zilog
- Fast programming algorithms.
- Connects direct to pc printer port.
- Simple full colour software.
- No expensive adapters.

ONLY £325

Eprom Programmer

ONLY £139

EPROMs, E²PROMs, Flash and 8748/51 micros.
Fast programming algorithms. Simple colour menu operation.

EMULATORS • SIMULATORS • COMPILERS • ASSEMBLERS
PROGRAMMERS • 8051 8085 Z8 68020 77C82 80C552 320C25 68HC11 6301 6502 87C751 65816 Z80 6809 PIC 7720 MIPS etc.

Prices exclude VAT & Delivery

SMART COMMUNICATIONS

2 Field End • Arkley • Barnet • Herts • EN5 3EZ • England
Telephone +44 (0)181 441 3890 Fax +44 (0)181 441 1843

VISA

CIRCLE NO. 120 ON REPLY CARD

The MICRO MODULE A NEW LOW COST controller that gives you customisation for as little as £95 one off

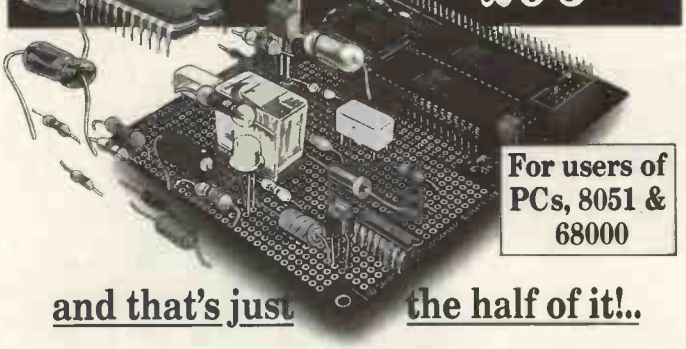

For users of PCs, 8051 & 68000

and that's just the half of it!..

FEATURES

- 16/32 bit 68307 CPU for fast operation
- Up to 1 Mbyte of EPROM space onboard
- Up to 512Kbyte SRAM space onboard
- 32 Kbyte SRAM fitted as standard
- RS232 serial with RS485 option
- MODBUS & other protocols supported
- Up to 22 digital I/O channels
- 2 timer/counter/match registers
- I²C port or Mbus & Watch dog facilities
- Large Proto-typing area for user circuits
- Up to 5 chip selects available
- Program in C, C++, Modula-2 & Assembler
- Real Time multitasking Operating System
- OS9 or MINOS with free run time license option
- Manufacturing available even in low volumes
- A full range of other Controllers available

P.C. 'C' STARTER PACK AT ONLY £295 + VAT

The Micro Module will reduce development time for quick turnaround products/projects and with the P.C. 'C' Starter pack allow you to start coding your application immediately, all drivers and libraries are supplied as standard along with MINOS the real time operating system all ready to run from power on.

The 'C' Starter pack includes: A Micro Module with 128 Kbyte SRAM, PSU, Cables, Manuals, C compiler, Debug monitor ROM, Terminal program, Downloader, a single copy of MINOS. Extensive example software, and free unlimited technical support all for £295 + VAT.

CMS Cambridge Microprocessor Systems Limited
Unit 17-18, Zone 'D', Chelmsford Road Ind. Est., Great Dunmow, Essex, U.K. CM6 1XG
Phone 01371 875644 Fax 01371 876077

CIRCLE NO. 121 ON REPLY CARD

CHELMER VALVE COMPANY

If you need Valves/Tubes or RF Power Transistors e.t.c. ...then try us!

We have vast stocks, widespread sources and 33 years specialist experience in meeting our customers requirements.

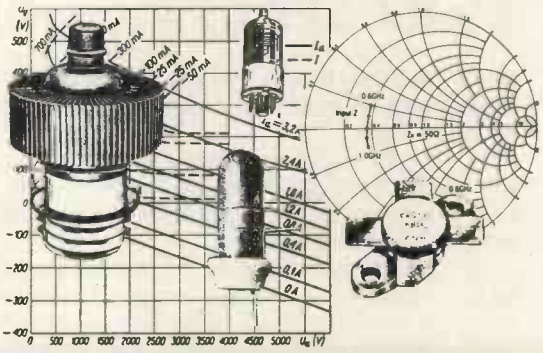

Tuned to the needs of the Professional User

Chelmer Valve Company, 130 New London Road, Chelmsford, Essex CM2 0RG, England
☎44-01245-355296/265865
Fax: 44-01245-490064

CIRCLE NO. 122 ON REPLY CARD

Switch debouncer

This was meant to debounce the contacts of a semi-automatic Morse key, but has since been used for many other types of switch. It takes a pair of contacts and introduces no delay, apart from that inherent in the circuit, which is insignificant when used with mechanical contacts.

A pulse of around 30ms formed by C_2R_3 removes the bounce when the contacts make. The pulse generated by C_3R_4 performs the same function as the contacts open, R_3 and R_4 being varied as needed. $IC_{1(a)}$ and $IC_{1(b)}$ extend the duration of a short contact closure and $IC_{1(d)}$ can be used to inhibit a second intentional closure for a time determined by the values of C_3R_4.

Output comes from Tr_1's open collector, the transistor allowing level shifting, if needed, but Tr_1 and R_5 may be left out and the output taken from pin 3 of IC_1. Supply voltage is adjusted to give the correct logic levels; the supply for the circuit shown is under 5V to about 18V.

$IC_{1(c)}$ gives a bleep when the contacts are closed or a shorter one if a *CR* is used before pin 9 of IC_1. If C_4R_6 are omitted and pins 8 and 9 of IC_1 are connected, $IC_{1(c)}$ gives an inverted output.

Ted Crowley
Invotron Ltd
Bray
Co. Wicklow

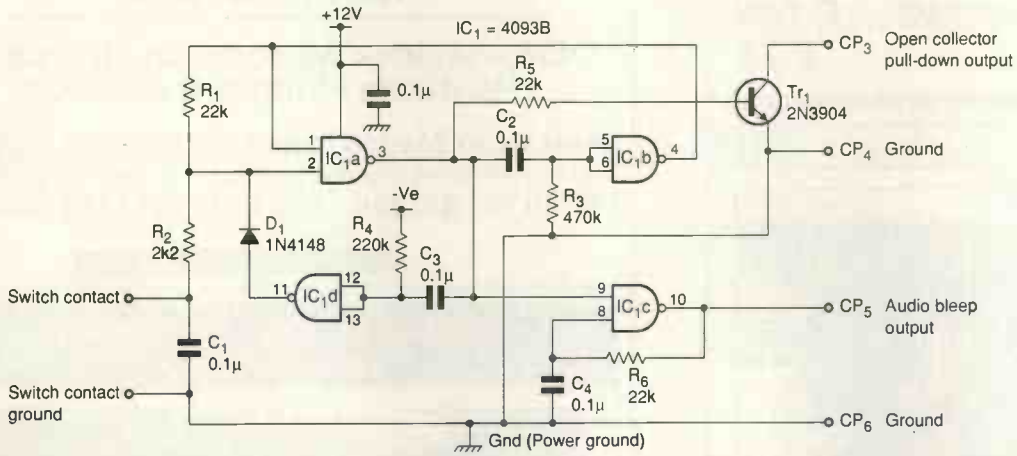

Switch debouncer, originally for a Morse key, has been used for many other applications, introducing no extra delay and producing a beep when contacts are made.

Mercury battery replacement

Mercury batteries in older light meters and cameras have had a very bad press and some manufacturers recommend simply using alkaline or silver oxide cells instead, even though the terminal voltage may not be correct.

Placing an *HP 5082-2835* Schottky diode in series with a 1.55V silver oxide cell reduces the output of the circuit to almost exactly the 1.35V of a mercury cell, due to the 0.25V drop across the diode at a typical load current of 0.1mA. Note that cameras usually have a positive chassis ground.

Someone could do the industry a service by packaging a Schottky in a little wafer to stack on a button cell or even to go inside it.

Michael A Covington
Artificial Intelligence Center
University of Georgia
USA

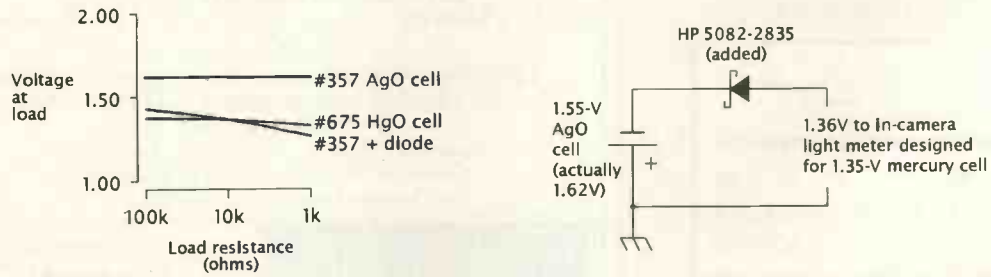

Instead of junking older photometers using banned mercury cells, use a Schottky and a silver oxide cell.

CADPAK for Windows

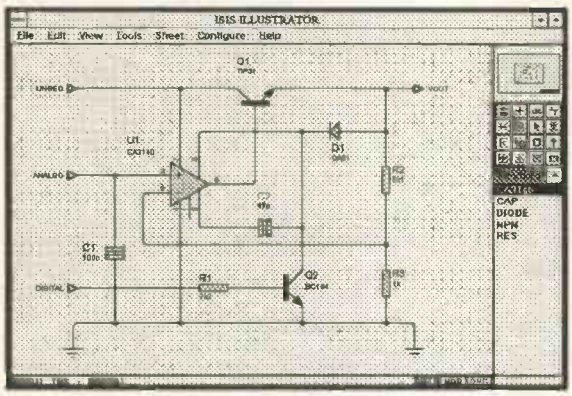

CADPAK is especially suited to educational, hobby and small scale schematic and PCB design. CADPAK includes both schematic drawing and 32-bit PCB drafting tools but as an entry level product, there is no netlist link between them.

CADPAK FOR WINDOWS ... £ 149

CADPAK FOR DOS ..... £ 79

PROPAK for Windows

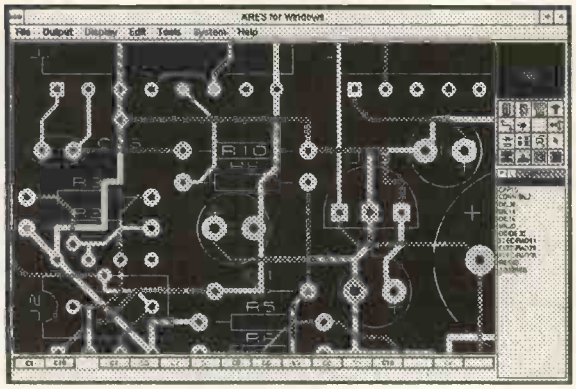

PROPAK has all of the features in CAPAK plus netlist based integration, automatic power plane generation and a powerful auto-router. PROPAK includes enough schematic capture and PCB design functionality for all but the most demanding applications.

PROPAK FOR WINDOWS ..... £ 495

PROPAK FOR DOS ..... £ 395

Call or fax today for a demo pack. Please state whether you would like a DOS or Windows pack.

labcenter

Electronics

53-55 Main St. Grassington, N. Yorks. BD23 5AA

Tel: 01756 753440 Fax: 01756 752857

Prices exclude postage (£5 for UK) and VAT. All manufacturers' trademarks acknowledged.

CIRCLE NO. 123 ON REPLY CARD

DID YOU KNOW?

More than half the world's PCs wake up to our BIOS!

And we're doing pretty well with hardware products too!

Motherboards:

TITAN - 2 x P5 EISA/PCI
ATLAS - P5 ISA/PCI
APOLLO - P5 Triton ISA/PCI
ATLAS LPX - P5 Triton ISA/PCI

Peripherals:

MegaRAID™ - PCI/SCSI/RAID

And more...Call us for more information!
***PLUS - Coming soon* PC-CARE™**
(AMIDiag for Windows)
Watch this space!

OEM enquiries welcome on all products, Hardware / Software and BIOS.

American Megatrends Intl. Limited
Unit C5, Worth Corner, Pound Hill, CRAWLEY, W.Sx. RH10 7SL
Tel 01293 882288 - Fax 01293 886550

American Megatrends

CIRCLE NO. 124 ON REPLY CARD

COMPONENTS & SYSTEMS FROM IOSIS

System Components from ISO9001 Source
Half Size ISA Single Board Computers
386SX-40 to 486DX4-100 with PC/104, 2 Serial Ports
IDE & FDD & Printer Port
and a variety of on-board functionality's:
FLASH/ROM Disc. Cache. VGA CRT/Flat Panel Controller

PC/104 Modules:
386 & 486 CPUs, Solid State Disc, Isolated RS232/485
VGA CRT/Flat Panel Display & SVGA Controllers
PCMCIA types I, II & III
System Enclosures with Passive Backplanes
Colour & Mono Flat Panel LCD Displays
System Integration and Support

2c Chandos Road, Redland
Bristol, BS6 6PE
Tel: 0117 973 0435
Fax: 0117 923 7295

iosis

CIRCLE NO. 125 ON REPLY CARD

Digital, programmable mark:space converter

With no effect on frequency, this circuit allows the digital programming of a rectangular wave duty cycle, in 1% steps, from 0 to 99% over a wide range of frequencies.

IC_{1a} is a free-running oscillator driving a 12-bit down counter, $IC_{5,6,7}$, directly and, by way of a synchronous decade rate multiplier $IC_{3,4}$, the 12-bit up counter IC_2.

A narrow pulse derived from the leading edge of the input signal loads the data from IC_2 into the down counter and provides reset and clear for the up counter and rate multiplier. Data output N of the up counter is determined by the input signal period, by the rate input M to the rate multiplier and by the clock frequency, giving $N = f_c M/f_{in}$.

After data is loaded, the output at RCO goes high until the output of the down counter reaches zero, where it stays until new data is loaded. Since the loaded data is N and since the down counter's clock also comes from the oscillator, the output stays high for a duration

$$T_1 = N/f_c = M/f_{in},$$

so the duty cycle at the down counter output is given by

$$T_1 f_{in} = M.$$

Since neither f_{in} nor the clock frequency figure in this, the circuit is insensitive to both and depends solely on M.

As an example, if the output frquency is 500Hz, the rate is 0.25 and the clock runs at 500kHz. The maximum count in the up counter is 250, so the output pulse duration is 250/500kHz=0.5ms. As the output frequency is 500Hz, the duty cycle is 25%.

Yongping Xia
Torrance
California

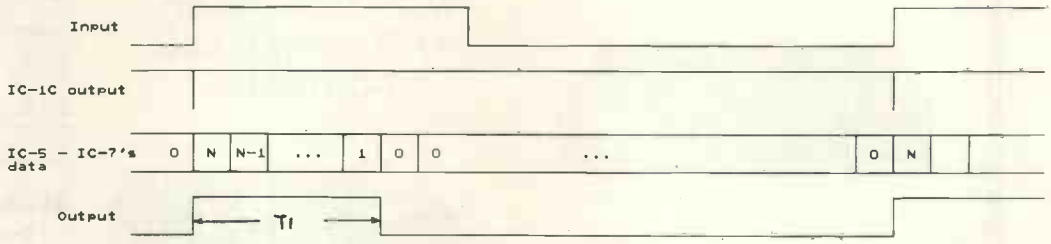

Programmed in 1% steps from zero to 99%, this duty-cycle controller is totally insensitive to frequency.

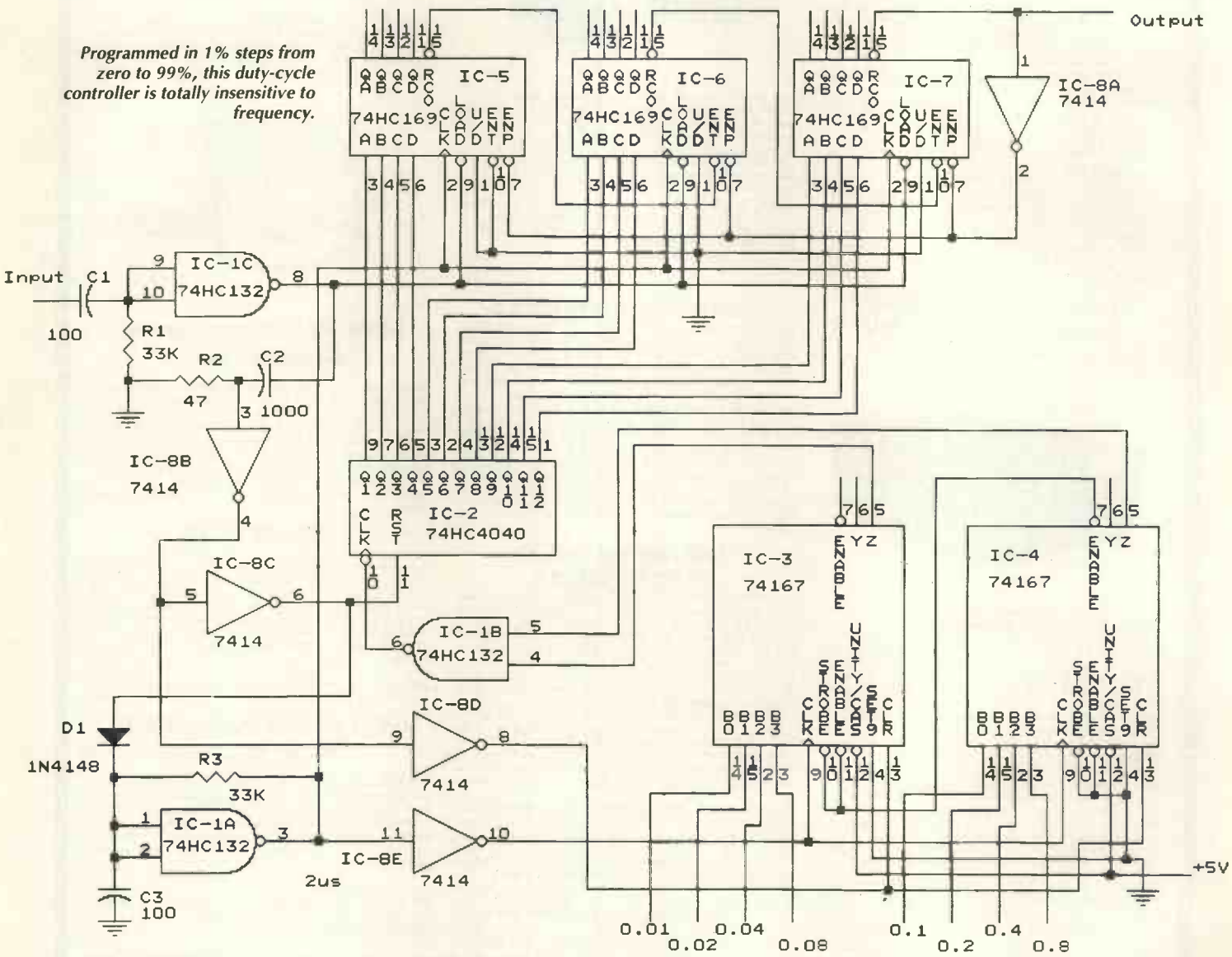

HART AUDIO KITS – YOUR VALUE FOR MONEY ROUTE TO ULTIMATE HI-FI

Hart Audio Kits and factory assembled units use the unique combination of circuit designs by the renowned John Linsley Hood, the very best audiophile components, and our own engineering expertise, to give you unbeatable performance and unbelievable value for money. We have always led the field for easy home construction to professional standards, even in the sixties we were using easily assembled printed circuits when Heathkit in America were still using tagboards!. Many years of experience and innovation, going back to the early Dinsdale and Bailey classics gives us incomparable design background in the needs of the home constructor. This simply means that building a Hart kit is a real pleasure, resulting in a piece of equipment that not only saves you money but you will be proud to own.
Why not buy the reprints and construction manual for the kit you are interested in to see how easy it is to build your own equipment the HART way. The FULL cost can be credited against your subsequent kit purchase.

K1100 AUDIO DESIGN 80 WATT POWER AMPLIFIER.

This fantastic John Linsley Hood designed amplifier is the flagship of our range, and the ideal powerhouse for your ultimate hifi system. This kit is your way to get úK performance at bargain basement prices. Unique design features such as fully FET stabilised power supplies give this amplifier World Class performance with startling clarity and transparency of sound, allied to the famous HART quality of components and ease of construction.
Useful options are a stereo LED power meter and a versatile passive front end giving switched inputs, with ALPS precision Blue Velvet low-noise volume and balance controls. Construction is very simple and enjoyable with all the difficult work done for you, even the wiring is preterminated, ready for instant use!. All versions are available with Standard components or specially selected Super Audiophile components at £29.60 extra per channel, plus ú2.40 if you want to include Gold Plated speaker terminals.

K1100B Complete STANDARD Amplifier Kit. £395.21
A1100B Factory Assembled. £499.21
K1100SC Complete SLAVE Amplifier Kit. £333.62
A1100SC Factory Assembled. £422.62
K1100M Complete MONOBLOC Amplifier Kit. £261.20
A1100M Factory Assembled. £329.20
RLH11 Reprints of latest Amplifier articles. £1.80
K1100CM Construction Manual with full parts lists £5.50

"CHIARA" SINGLE ENDED CLASS "A" HEADPHONE AMPLIFIER.

This unit provides a high quality headphone output for 'stand alone' use or to supplement those many power amplifiers that do not have a headphone facility. Easily installed with special link-through feature the unit draws its power from our new Andante Ultra High Quality linear toroidal supply. Housed in the neat, black finished, Hart minibox it features the wide frequency response, low-distortion and 'musicality' that one associates with designs from the renowned John Linsley Hood. Pre-terminated interconnecting leads and PCB mounted sockets prevent supply polarity reversal and on-board diagnostics provide visual indication of supply line integrity. Volume and balance controls are Alps "Blue Velvet" components. Very easily built, even by beginners, since all components fit directly on the single printed circuit board. The kit has very detailed instructions, and even comes with a complementary roll of Hart audiograde silver solder. It can also be supplied factory assembled and tested. Selling for less than the total cost of all the components, if they were bought separately, this unit represents incredible value for money and makes an attractive and harmonious addition to any hifi system.

K2100 Complete Kit. £109.50
K2100SA Series Audiophile version with selected audiophile components. £112.46
A2100SA Series Audiophile version, factory Assembled. . . . £149.46
K3565 "Andante" Power Supply Kit to suit "Chiara". £85.42
A3565 Power Supply, Factory Assembled. £128.42
CM2100 Construction Manual. £2.50
SPECIAL OFFER. Both units together, Kit Form. £184.92
Factory Assembled and Tested. £267.88

"Andante" SERIES 20VA AUDIOPHILE POWER SUPPLIES

Specially designed for exacting audio use requiring absolute minimum noise, low hum field and total freedom from mechanical noise this unit is a logical development from our highly successful 1550 series.
Utilising linear technology throughout for smoothness and musicality makes it the perfect partner for any module requiring fully stabilised ±15v supplies.
Two versions are available. K3550 has 2 ±15v supplies and a single 15v for relays etc. and can be used with our K1400 preamp and our K1450 RIAA pickup preamp, as well as other useful modules soon to be introduced. The K3565 is identical in appearance but only has the ±15v lighter current supply for use with the K1450 RIAA pickup pre amplifier or "Chiara" headphone amplifier.

K3550 Full Supply with all outputs. £93.75
K3565 Power Supply for K1450 & K2100. . . . . £85.42

ALPS *"Blue Velvet"* PRECISION AUDIO CONTROLS.

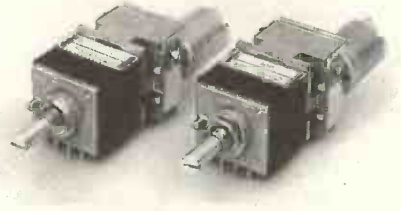

Now you can throw out those noisy ill-matched carbon pots and replace with the famous Hart exclusive ALPS 'Blue Velvet' range components only used selectively in the very top flight of World class amplifiers. The improvement in track accuracy and matching really is incredible giving better tonal balance between channels and rock solid image stability. Motorised versions have 5v DC motor.

MANUAL POTENTIOMETERS
2-Gang 100K Lin. £15.67
2-Gang 10K, 50K or 100K Log. £16.40
2-Gang 10K Special Balance, zero crosstalk and zero centre loss. £17.48
MOTORISED POTENTIOMETERS
2-Gang 20K Log Volume Control £26.20
2-Gang 10K RD Special Balance, zero crosstalk and less than 10% loss in centre position. £26.98

TECHNICAL BOOKSHELF

NEW! Another Classic by John Linsley Hood. "AUDIO ELECTRONICS" Following the enormous ongoing success of his "Art of Linear Electronics" the latest offering is the all-new edition of "Audio Electronics", now entirely re-written by the master himself. Underlying audio techniques and equipment is a world of electronics that determines the quality of sound. For anyone involved in designing, adapting or using digital or analogue audio equipment understanding electronics leads to far greater control over the reproduced sound. The subjects covered include tape recording, tuners, power output stages, digital audio, test instruments and loudspeaker crossover systems. John's lifetime of experience and personal innovation in this field allow him to apply his gift of being so familiar with his subject that he can write clearly about it and make it both interesting and comprehensible to the reader. Containing 240 pages and over 250 line illustrations this new book represents great value for money at only £18.99

"THE ART OF LINEAR ELECTRONICS."

The definitive linear electronics and audio book by John Linsley Hood. This 300+ page book will give you an unparalleled insight into the workings of all types of audio circuits. Learn how to read circuit diagrams and understand amplifiers and how they are designed to give the best sound. The virtues and vices of passive and active components are examined and there are separate sections covering power supplies and the sources of noise and hum. As one would expect from this writer the history and derivation of audio amplifier circuitry have an entire chapter, as does test and measurement equipment. Copiously illustrated this book is incredible value for the amount of information it contains on the much neglected field of linear, as opposed to digital, electronics. Indeed it must be destined to become the standard reference for all who work, or are interested in, this field. Latest reprinted edition with extended index. 1994 344 Pages. 247 x 190. 1Kg. 0-7506-0868-4. . . . . £16.95*

"DIGITAL AUDIO AND COMPACT DISC TECHNOLOGY" 0-7506-0614-2 . . . . . £17.95*
INTRODUCING DIGITAL AUDIO CD, DAT AND SAMPLING. ISBN 1870775 22 8 . . . . . £7.95
"THE ART OF SOLDERING" 0-85935-324-3. 0 . . . . . £3.95
"TOWERS' INTERNATIONAL TRANSISTOR SELECTOR" 0-572-01062-1. . . . . £19.95*
"AUDIO" F.A.Wilson. BP111 . . . . . £3.95
"HOW TO USE OSCILLOSCOPES & OTHER TEST EQUIPMENT" R.A.Penfold. BP267. . . . . £3.50
"THE LOUDSPEAKER DESIGN COOKBOOK" Vance Dickason. (4th Edn.) 0-9624-191-7-6 . . . . . £22.95*
ELECTROSTATIC LOUDSPEAKER DESIGN AND CONSTRUCTION Ronald Wagner BKT6 . . . . . £18.95
"AN INTRODUCTION TO LOUDSPEAKERS & ENCLOSURE DESIGN" V. Capel. BP256 . . . . . £2.95
"LOUDSPEAKERS FOR MUSICIANS" BP297 . . . . . £3.95
"THE HART PRINTED CIRCUIT BOARD CONSTRUCTION GUIDE." £2.50

VALVE & EARLY CLASSIC BOOKS

THE VTL BOOK David Manley BKVT1 . . . . . **£17.95**
LOUDSPEAKERS; THE WHY AND HOW OF GOOD REPRODUCTION. G.Briggs. 1949 0-9624-1913-3. . . . . **£8.95**
MULLARD TUBE CIRCUITS FOR AUDIO AMPLIFIERS BKAA27 . . . . . **£13.95**
"THE WILLIAMSON AMPLIFIER." 0-9624-1918-4. . . . . **£6.95**
AN APPROACH TO AUDIO FREQUENCY AMPLIFIER DESIGN. *GEC* 1957, 1-882580-05-2 . . . . . £18.95
AUDIO ANTHOLOGIES, articles from Audio Engineering. Six voumes covering the days when audio wasyoung and valves were king!. BKAA3/1 to 6. All . . . . . £13.95 each.
"A SIMPLE CLASS A AMPLIFIER" J.L.Linsley Hood M.I.E.E. 1969. RLH12. . . . . £2.50
Postage on all books, unless starred, is only ú1.50 per book, maximum ú4.50 for any number, any size!. Starred items are heavy books costing . . . . . £2.50 to send.
No waiting!. All listed books are normally in stock!.
SPECIAL OFFER. All book orders over £15 will receive a **FREE** John Linsley Hood monograph entitled "Digital versus Analogue, Black Disks or Silver?"

SPECIAL OFFER PRECISION Triple Purpose TEST CASSETTE TC1D.

Are you sure your tape recorder is set up to give its best? Our latest triple purpose test cassette checks thethree most important tape parameters without test equipment. Ideal when fitting new heads. A professional quality, digitally mastered test tape at a price anyone can afford. Test Cassette TC1D. Our price only. . . . . £9.99.

HC80 Replacement Stereo Cassette Head.

The excellent performance of modern cassette recorders depends totally on the quality of the R/P head.Even the slightest amount of wear can impair the frequency response and distortion levels. Our HC80 is atop quality head from one of the foremost manufacturers in Japan, easily fitted to most standard stereo recorders (except Sony) and will transform the performance over a worn head. Only the fact that we buy these in vast quantities enables us to offer them at the amazing price of only £11.70 each or 2 for £17.60.
We also stock a range of other heads, including reel-to-reel stereo heads.

SOLDERING

The size of modern components makes the right soldering equipment essential for good results. Everything we offer we actually use in our own workshops!. See our Lists for the full range. 845-820 XS240 ANTEX 240v 25w Soldering Iron. This is the ideal Multi-purpose iron as the bit is designed to totally surround the element giving the best heat transfer. This excellent design also means that although it is small and handy enough for modern components its heating capacity is better than larger irons of conventional construction. Excellent Value. **£9.93**
845-080 ST4 Lightweight Soldering Iron Stand. This has provision for the classic damp sponge for bit wiping **£3.95**

HART SUPER AUDIOGRADE SILVER SOLDER.

Hart Super Audiograde Silver Solder has been specially formulated for the serious audiophile. Not only does it give beautiful easy-to-make joints but it is designed to melt at normal soldering temperatures avoiding the possibility of thermal damage to components or the need for special high temperature irons. A very low residue flux makes perfect joints easy but eliminates the need for board cleaning after assembly.

845-007 3mtrs 22SWG in Hart Mini Tube **£3.90**
845-008 100g. Reel Special Valve Grade, 20swg **£12.90**
845-009 100g. Precision PCB Grade, 22swg **£14.75**
845-110 100g Reel Superfine 24swg for ultra precise control and easy working **£21.45**

QUALITY AUDIO KITS

24 hr. SALES LINE (01691) 652894

ALL PRICES INCLUDE UK/EC VAT

HART ELECTRONIC KITS LTD.
1 PENYLAN MILL
OSWESTRY, SHROPSHIRE
SY10 3AF

Multiplying d-to-a converter

This is usable as a multiplying digital-to-analogue converter or as a triangle generator, given a counter to drive it.

Figure 1 shows the idea. Gain of this basic circuit is given by,

$$G = \frac{2(R_V + AR)}{R_V + AR + (1-A)R} - 1$$

If R_V=R, gain becomes G=A, so that if R changes from 0 to R, gain changes accordingly from 0 to 1. With R_V=0, gain is 2A–1 and a change of R from 0 to R changes gain from –1 to +1.

The practical circuit in **Fig. 2** uses a *4066* (IC_3) switching the resistor chain to form AR and IC_2 to provide (1–A)R. Data changing from 0000 to 1111 varies the gain from 0 to 1 with the shorting link open and from –1 to +1 with it closed. Driving the data inputs by means of an up/down counter gives a triangle at the output.

W Dijkstra
Waalre
The Netherlands

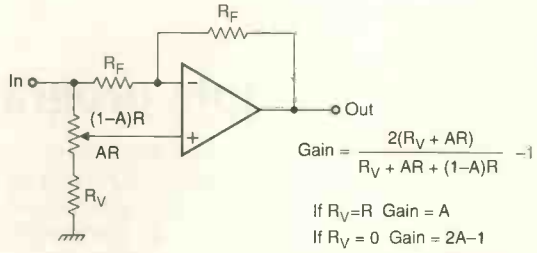

Fig. 1.Principle of the digitally controlled, multiplying d-to-a converter.

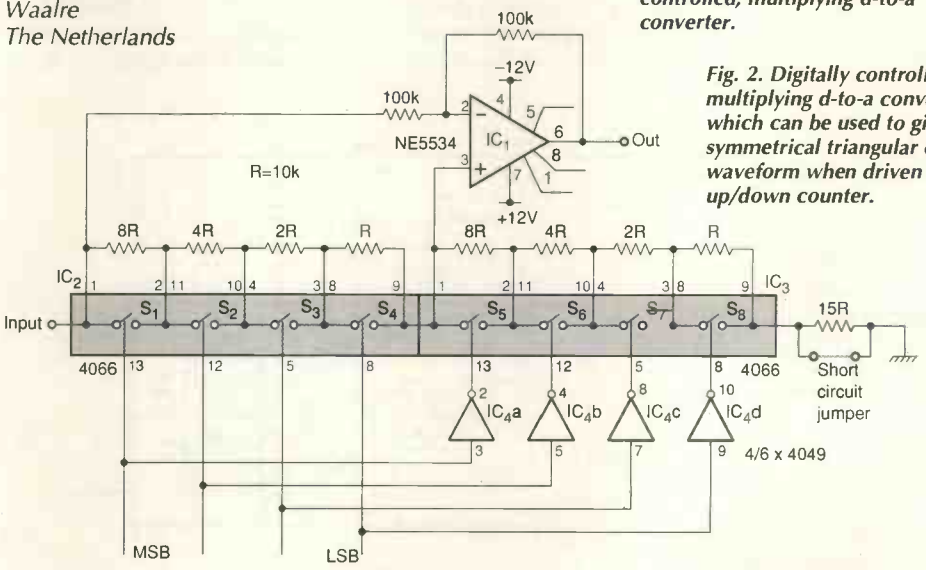

Fig. 2. Digitally controlled, multiplying d-to-a converter, which can be used to give a symmetrical triangular output waveform when driven by an up/down counter.

Voltage-controlled oscillator

Here is a low-distortion, variable-Q, voltage-controlled oscillator. A vital part of the circuit is the arrangement in **Fig.1**, which provides the frequency control using a *MPY634* multiplier. Since Z drives the inverting output of the amplifier, feedback is negative and the output voltage is given by,

$$V_{out} = A(V_{in}V_c / SF - V_{out})$$

where SF is a scale factor, nominally 10V. When A approaches infinity, output voltage is $V_{out} = V_{in}V_c/SF$, which may be written,

$$V_{out} = V_{in} / sCR'$$

where,

$$R' = RV_c / SF$$

and V_c is the control voltage.

In **Fig. 2**, cut-off frequency and Q of the state-variable filter, using the two integrators are given by,

$$\omega_0 = \frac{V_c}{RC.SF}$$

and

$$Q = \frac{1 + R_1/R_2}{3}$$

So Q is adjustable to any value by varying the ratio R_1/R_2, with no effect on cut-off frequency. Feeding the filter output back to the inputturns the circuit into an oscillator, in which integrator IC_4 smoothes the rectified output to give a control voltage for the fet, whose variable channel resistance balances positive and negative paths for low distortion.

Kamil Kraus
Rokycany
Czechoslovak Republic

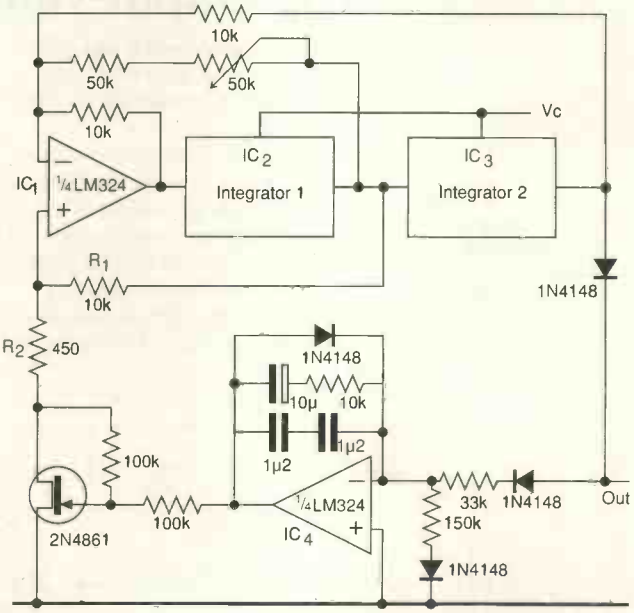

Fig. 2. Complete oscillator circuit, in which frequency is determined by RC in Fig.1 and Q by the ratio of R_1 and R_2.

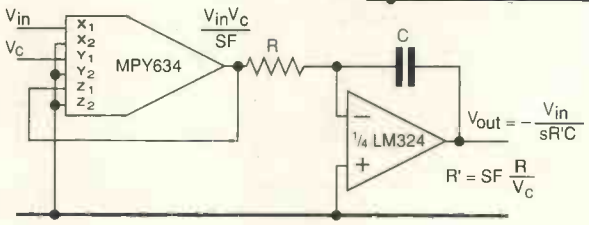

Fig. 1. Multiplier and integrator form part of state-variable bandpass filter, the frequency-determining element of the oscillator.

Simple programmable switcher gives 100W

We have used this power supply to give 100W at an efficiency of better than 70% and with ripple at about 50mVpk-pk. The control signal, V_{DAC}, sets output power, rather than voltage.

Effectively, the circuit is that of a switching down-converter, using a commercial pulse-width modulator, the *LM3578*. $IC_{3(a)}$, one half of an *LM13700* transconductance amplifier, takes as its input the voltage drop across R_4, the current sensing resistor. Current at its output, which is proportional to I, determines the gain of the other half amplifier, whose output current is converted to the voltage V_w by feedback resistor R_8, V_w being compared in IC_2 with the control voltage. If IC_2 output is under 1V, the pwm opens pass transistor Tr_1.

Values of $R_{4,7}$ and P_2 are chosen so that $IC_{3(a)}$ and $IC_{3(b)}$ inputs stay below 100mV under conditions of maximum current and voltage of the down-converter, so that V_w is in proportion to output power over three decades, within 1%. Variable P_1 trims V_w to a maximum above 10V to give linearity over the 0-10V V_{DAC} range or below 10V to drive the power supply at full power.

Low power is trimmed by the *741* correction circuitry, which is not shown, to make the supply turn off when the number controlling V_{DAC} goes from 0 to 1.

Umberto Ruffina and Marco Villa
University of Pavia
Pavia
Italy

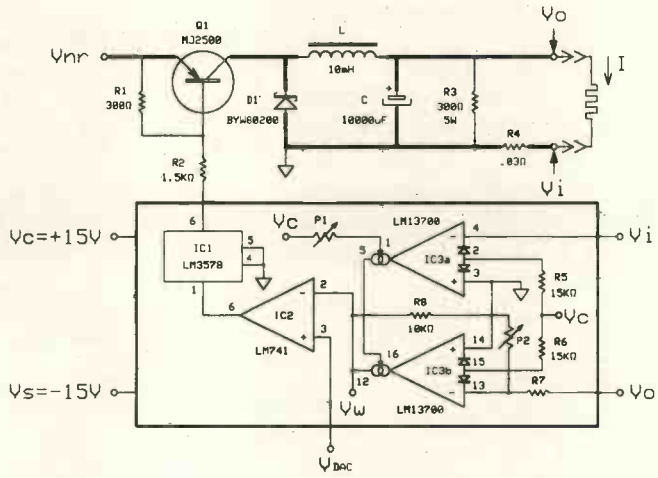

Switching power supply is programmed for power instead of voltage or current, giving up to 100W from 40V input.

High input-voltage comparator

Using a single power rail, this comparator allows the input voltage to exceed that specified for the op-amp in use.

In this case, the circuit is used to sense the small voltage caused by a current drop in series resistor between a power supply and its load. Both inputs of the comparator in a basic circuit would be at or approaching the full rail voltage – in this instance 36V, far outside the permissible limits.

In the gating comparator shown, the voltage drop across the current-sensing resistor R_s is taken to the inverting op-amp input, being divided by $R_{1,2}$, the reference voltage derived from the zener and its dividing chain going to the other input. When no gating pulse is present, this divider consists of $R_{5,6}$ and of $R_{5,6,8}$ when the gate pulse turns Tr_1 on.

Assuming that all the divider resistors are equal, differential voltage at the op-amp inputs is $V_{supp}-V_s=(V_{ref}-V_s)/2$; when V_s exceeds V_{ref}, the op-amp output goes high. When the gate pulse appears, the differential voltage is approximately $V_s/6$ and the output goes low.

N I Lavrentiev
Kaliningrad
Moscow Region, Russia

Comparator accepts higher input levels than is normally allowed and is useful for series power supply current sensing.

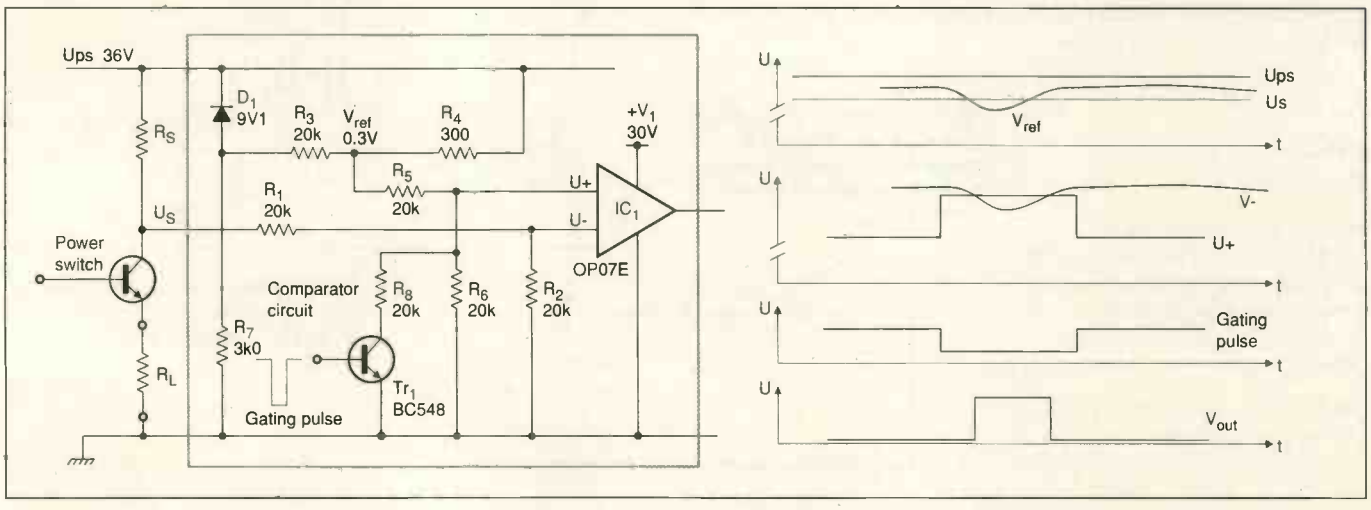

£30 WORTH OF VOUCHERS

CATALOGUE
WAS £2.50
NOW FREE
Only the cost of a stamp

THINK COMPONENTS - THINK CRICKLEWOOD

• TELEVISION & VIDEO SPARES • RESISTORS & CAPACITORS • HI-FI GADGETS & SPEAKERS • TRANSISTORS & I.C.'s • AUDIOPHILE CAPACITORS • IN CAR AUDIO • COMPUTER BOARDS • TOOLS & TEST EQUIPMENT • PLUGS SOCKETS & LEADS

Cricklewood Electronics

PLEASE SEND ME A COPY OF THE 1995 CRICKLEWOOD CATALOGUE.

Name.....

Address.....

.....

.....

.....

.....EWW

Cricklewood Electronics Ltd, 40-42 Cricklewood Broadway, London NW2 3ET. Tel: 0181-450 0995 Fax: 0181-208 1441

CIRCLE NO. 126 ON REPLY CARD

The EM68
68000 Embedded OEM Module

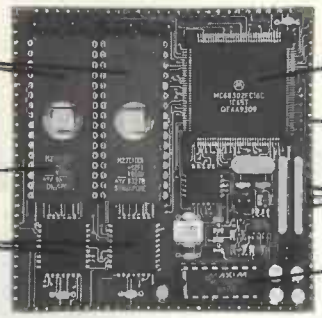

Powerful, Practical and Sensibly Priced

The CPU is Motorola's 16 bit 68302, a highly integrated 68000 processor running at 16Mhz. This processor has 3 full high speed serial ports operating in UART, HDLC/SDLC, BISYNC or DDCMP modes. It also has DMA channels. Interrupt controller, 28 parallel I/O lines 2 16 bit timers with compare and capture, Watchdog timer and low power (standby) modes. (We can supply the MC68302 Data Book.)

The Memory Up to 1M byte of EPROMs – 1M byte of FLASH EPROM and 64k Bytes of static RAM.

The EM68 Expandable to 16M byte, the EM68 is constructed on a Multilayer PCB with full power and ground planes and has a small 7.62cm^2 footprint.

Prices range from £255.50 (1 off – 1M Byte FLASH) down to £95.00 (100+ No FLASH)

Our Catalogue lists products based on the 64180, 80C31, Dallas 80C320, 80C552, 80C188 processors, and a wide range of peripheral modules, A/D, D/A, Serial, Opto, Relay, Transistor drive, Stepper drive, Thermocouple etc. with power supplies, backplanes and cases. Request a copy today.

Devantech Ltd
INDUSTRIAL ELECTRONIC CONTROLS

Units 2B-2C, Gilray Road, Vinces Road Industrial Est, Diss, Norfolk IP22 3EU, UK.
Tel: +44 379 644285
Fax: +44 379 650482

CIRCLE NO. 127 ON REPLY CARD

TELFORD ELECTRONICS

HP EQUIPMENT
HP8161A Programmable Pulse Generator (opt. 001-020)
HP5370B (HPIB) Universal Tiume Interval Counter
HP8445B Automatic Preselector (opt. 002-003)
HP8656A Signal Generator (opt. 001)
HP8901A Modulation Analyzer
HP3586B Selective Level Meter
HP5335A Universal Counter (opt. 020/040)
HP3336B Synthesizer/Level Generator
HP3570A Network Analyzer
HP8016A Word Generator
HP3571A Tracking Spectrum Analyzer
HP3330BAutomatic Synthesizer
HP339A Distortion Measurement Set
HP5328A Universal Counter
HP11722A Sensor Module
HP8015A Pulse Generator
HPR532A Frequency Meter
HP8761A S.P.D.T. RF Switch
HP435A (B) Power Meter c/w RF Head
HP432A Power Meter c/w RF Head
HP8170A Logic Pattern Generator
HP59501A Power Supply Programmer
HP59307A VHF Switch
HP59306A Relay Actuator
HP461A Amplifier
HP400FL A.C. Voltmeter
HP3200B VHF Oscillator
HP8502A Transmission/Reflection Test Set 500KHz-1.3GHz
HP35650 System [8 slot] c/w HP35652B x4, HP35653A, HP35651A
HP486A Thermistor Mount
HP6920 Meter Calibrator
VARIOUS HP PLOTTERS IN STOCK – PLEASE ASK FOR DETAILS
HP1740A 100MHz Dual Trace/Storage scope
HP180A + HP1801A + HP1821A 50MHz scope
HP1742A 100MHz Dual Trace/Storage scope
HP8654A 10-520MHz Signal Generator
HP8614A 0.8-2.4GHz Signal Generator
HP8616A1.8-4.5GHz Signal Generator
HP4204A 10Hz-1MHz LF Oscillator
HP651B Test Oscillator
HP203A Variable Phase LF Generator
HP6261B 0-20V 0-50A Power Supply
HP6209B DC 0-320V 0-0.1A Power Supply
HP5342A Microwave Frequency Meter 18GHz
HP5308A 75MHz Counter/Timer
HP5305A 1100MHz Counter

TEKTRONIX EQUIPMENT
TEK11401 Digitising Oscilloscope c/w 11A34
TEK2465A 35MHz Oscilloscope
TEKP6042 Current Probe D.C.-50MHz
TEK7904, 7854, 7603, 7704A, 7633, TM504, TM503 IN STOCK
TEK Plug-ins: 7A16A, 7B51, 7B87, 0F1, 7D01, 7A26, 7B36A, DC509, DC504A, AM503, 7B92A, 7B53A, MANY MORE IN STOCK

MARCONI EQUIPMENT
6460/1 Power Meter c/w Sensor Head 10MHz-18GHz
2830 Multiplex Tester
2829 Digital Analyzer
2828A Digital Simulator
2831 Channel Access Switch
2833 Digital Line Monitor
MARCONI Microwave Education Test Bench 'X' Band – Brand New
2015 Signal Generator 10-520MHz
2019 Signal Generator 80KHz-1040MHz

OTHER TEST EQUIPMENT
ROHDE & SCHWARZ SMS Signal Generator 0.4-520MHz
ROHDE & SCHWARZ SMUV Signal Generator 10KHz-130MHz
IWATSU SAS8130 Waveform Analyzer c/w SH-IB Pl D.C.-3.5GHz
IWATSU DM2350 Digital Memory 10Bit 20ns
IWATSU DM6430 Digital Memory Scope
KIKUSUI TOS8850 W/I Auto Tester
NARDA SMA Coaxial 90° Hybrid 2-4GHz
NARDA SMA Minature Stripline Coupler 2-4GHz
NARDA Various SMA Attenuators DC-6GHz/DC-12GHz
SOLARTRON 7045 Digital Multi Meter 4½ Digit
FLUKE 8860A Digital Multi Meter
FERROGRAPH Recorder Test Set RTS2
TOOL CHESTS (8 drawer) Made by; H Fine & Son (BRAND NEW)
CLARE Flash Tester Model GCHO/IP
RACAL 9081/9082 520MHz Synthesized Signal Generator
GOULD J3B 10Hz-100KHz Low Distortion Oscillator
ADVANCE HIE 15-50KHz LF Oscillator
RADFORD LD04 Low Distortion Oscillator
RADFORD LDMS2/2 Low Distortion Measuring Set
PHILIPS PM5132 Function Generator 0.1Hz-50MHz
PHILIPS PM5715 Pulse Generator 1Hz-50MHz
ADRET Type 2230A
ROHOE & SCHWARZ SUF2
FARNELL TSV70 MK2 0-70V @ 5A/0-35V @ 10A
VARIOUS LAMBDA & KEPCO PSU's IN STOCK
HAVEN Temperature Calibrator OTB-5 oil/water bath
HAVEN Thermo Cal IS Thermocouple Simulator/Calibrator
TIME CO Millivolt POT Source Model 404N
LEADER LOC705 Scope Calibrator
CASELLA WBGT
PPM 411F Current Reference
CROPICO Resistance Standards - Various in stock
H TINSLEY Resistance Bridge Type 5761
WALLACE & TIERNAN Precision Pneumatic Calibrator
MICRODINE Telemetry Receiver 2.2-2.3GHz
AVO DA116 Digital Multi Meter
FLUKE 8000A Digital Multi Meter
RACAL 9904 50MHz Timer/Counter
RACAL 9913/9914/9915/9916/9917/1992/1998 Frequency Counters
RACAL INSTRUMENTATION RECORDERS 4DS/7DS
RACAL WORD SAFE 8 track, 48 Hour, Secure voice recorder
RACAL TA1885 Auto tuned HF Transmitter 1.6-30MHz 1KW output
RACAL TA1800 HF Linear Amplifier 2-30MHz 10KW Output (all mode)
PYE T300AM 68-174MHz 300W output
REDIFON GA484 400W Solid State Amplifier c/w 1KW Aerial Filter, Drive Unit, PSU
HARRRIS ATU 601A 1-30MHz. 1KW
DATALAB DK1080 Programmable Transient Recorder
ROTEX AC/DC Precision Calibrator
RACAL 9084 Synthesized Generator c/w GPIB Interface
ROLAND Drafting Plotter A2, DPX-2200 Various Interfaces, 8 pen
ROLAND DG X-Y Plotter A3 DXY-980A Various Interfaces, 8 pen
KROHN-HITE Filter Model 3202R
CABLETRON Systems MR-9000C c/w lanview multicore ethernet/IEEE
CABLETRON Systems FR3000 c/w lanview fibre optic repeater unit
ANRITSU Channel Selector MS120A
BRUEL & KIAER Vibration Programmer ZH0100
MINOLTA TV Colour Analyzer c/w Probe TV2140
CORNIX 48/48 Audio Switch Matrix Type 9218/1
PHOENIX Telecommunications Analyzer 5500A
2nd Unit; Phoenix 5500-MSU 5500-200
5500-555 5500A-828
3rd Unit; Phoenix Control Module 5500-200 + 5500A-828
The above 3 items come as one unit

WATKINS & JOHNSONS EQUIPMENT
Microwave Tuning Frame 4-8GHz
Frequency Extender 2-4GHz
Demodulator DM112.5
Signal Monitor
Receiver WJ8617B 2-500MHz

MICROWAVE COAXIAL SWITCHES
"N" Type connectors. R.L.C. Model S-2799
2KW @ 100MHz 400W @ 6GHz
TELEDYNE: SMA Connectors. Model CS38S16 22GHz 1in/6 out
FLEXWELL COAXIAL CABLE CU2Y size 1 5/8th 50 Ohm

AN EXTENSIVE RANGE OF TEST EQUIPMENT IS AVAILABLE. PLEASE SEND FOR OUR NEW CATALOGUE
Postage and packing must be added. Please phone for price. VAT @ 17½% to be added to all orders. Please send large SAE for details.

Telford Electronics, Old Officers Mess, Hoo Farm, Humbers Lane, Horton, Telford TF6 6DJ
Tel: 01952 605451 Fax: 01952 677978

CIRCLE NO. 128 ON REPLY CARD

Surround-sound standards polarise

Peter Willis looks at the pros and cons of two competing surround-sound standards – Dolby's AC-3 and Europe's MPEG-2.

Surround sound is set to enter a new dimension in the digital era, but differences between broadcasting standards in America and Europe could perpetuate the film studios' use of the PAL/NTSC division to control the territorial release of new titles.

Dolby's AC-3 system, demonstrated in Berlin and again at Live '95 in London, has been selected by the American FCC as the standard for its digital television system. Soundtracks in AC-3 are already being included on NTSC versions of Laserdiscs, with 50 titles due out by the end of the year. Players, and outboard demodulators are becoming available.

Operating at 384Kbit/s, AC-3 is a 5.1 channel system providing totally discrete signals to each of the five speakers – left, centre, right and rear left and right – in a surround-sound set-up. The '.1' refers to the optional subwoofer.

This standard won't replace existing Pro-Logic, but because it does not have to be mixed through a matrix, lateral diagonal effects become possible, and the sense of space is increased. It is however a multichannel system – not just five separate channels; the coder looks at what all the channels are doing together, enabling it to optimise the available bits, and to apply psychoacoustic principles. It also enables the datastream to be downmixed to four, two or one channel, with acceptable balance, as required.

And in Europe...

Europe, meanwhile, has chosen the Musicam-based MPEG-2 system for its Digital Video Broadcasting standard. This was inevitable, since backwards compatibility with stereo MPEG-1 – which can carry the two-channel Pro-Logic matrix – was a criterion.

MPEG-2 becomes a true five-channel system by adding an 'Aux Data' bitstream carrying the centre and rear channels. Unfortunately this has the effect of depriving the MPEG-1-compatible Left and Right channels of vital information, notably dialogue, so the Aux Data has to be put through a matrix to restore the information. This, however, increases the apparent noise. As a result, the bit-rate has to be increased by some 40% to compensate, exceeding the available transmission limit. Not surprisingly, the people at Dolby see this as something of a bodge.

The real question, however, is what will go onto high-density MPEG-2 digital video discs when they start to be released next year. The SD group has publicly indicated that European discs will have MPEG-2 soundtracks. This would make for compatibility between players and broadcast receivers, but inhibit global traffic in pre-recorded discs. In fact, such is the capacity of the discs that they would have room for both soundtracks – provided the film studios don't intervene. ■

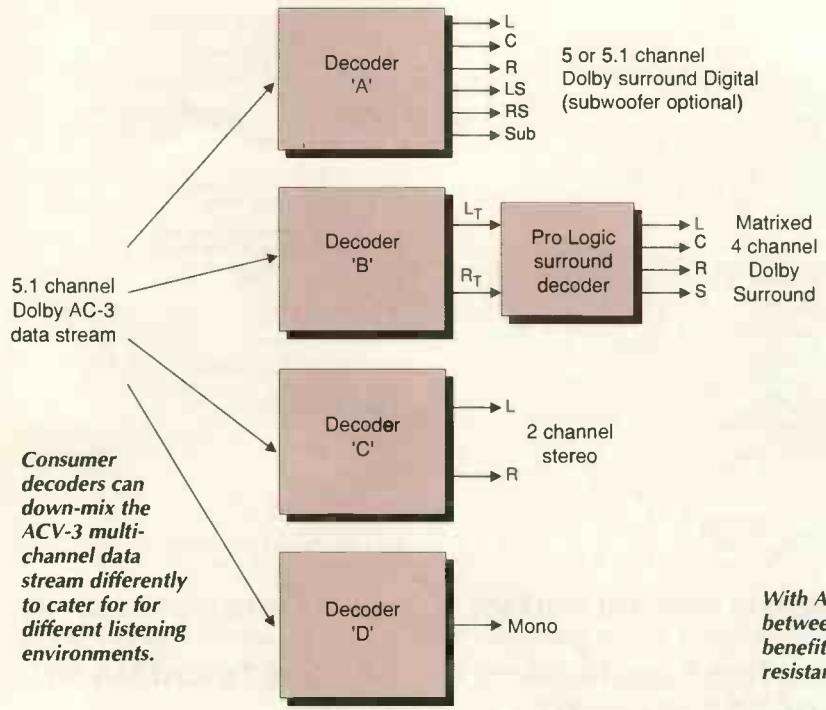

Consumer decoders can down-mix the ACV-3 multi-channel data stream differently to cater for for different listening environments.

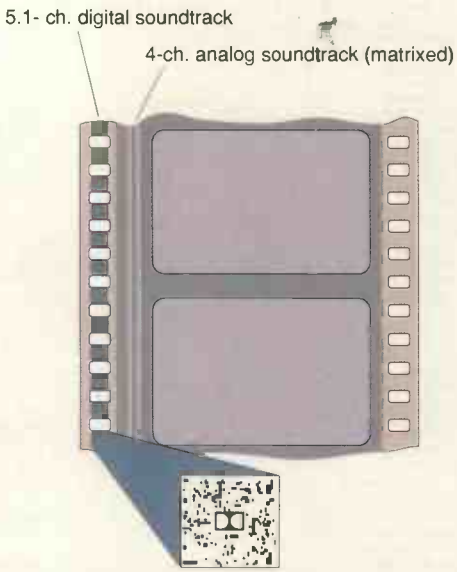

With AC-3, it possible to fit a 5.1-channel digital sound track between the sprocket holes on 35mm prints. Among the benefits are high-quality sound and a track that is highly resistant to wear due to a relatively large bit size.

SEETRAX CAE RANGER PCB DESIGN

WITH COOPER & CHYAN AUTOROUTER

RANGER3	- DOS	£2500
	- Windows\NT	£2900

Hierarchical or flat schematic linked to artwork.
Unlimited design size, 1 micron resolution
Any shaped pad, definable outline library
Pin, gate & outline swapping - auto back annotation
Split power planes, switchable on - line DRC
COOPER & CHYAN SPECCTRA
autorouter (SP2)
Inputs: OrCAD, Cadstar,
PCAD, AutoCAD DXF

Outputs: Postscript, Windows bit map

R2 & R3 Outputs: 8/9 & 24 pin printers, HP
Desk & Laser Jet, Cannon Bubble Jet,
HP-GL, Gerber,
NC Drill, AutoCAD DXF

RANGER2 £150

Upto 8 pages of schematic linked to artwork
Gate & pin swapping - automatic back annotation
Copper flood fill, Power planes, Track necking,
Curved tracks, Clearance checking,
Simultaneous multi-layer auto-router

RANGER2 UTILITIES £250

COOPER & CHYAN SPECCTRA auto-router (SPI)
Gerber-in viewer, AutoCAD DXF in & out

UPGRADE YOUR PCB PACKAGE TO RANGER2 £60

TRADE IN YOUR EXISTING PACKAGE TODAY

Seetrax CAE, Hinton Daubnay House, Broadway Lane, Lovedean, Hants, PO8 OSG
Call 01705 591037 or Fax 01705 599036 + VAT & P.P

All Trademarks Acknowledged

CIRCLE NO. 129 ON REPLY CARD

SYNTHESISED SIGNAL SOURCE

an innovative design from an established 'Off-Air' Company

NEW from Halcyon

- dc to 16 MHz in 0.01 Hz steps
- Sinewave output 0dBm into 50Ω
- Can be run independently or genlocked to external source
- Custom designed chip set
- Freestanding rack mounting, or OEM options available
- Increased resolution and increased stability options available

Models available October, contact us for prices

CIRCLE NO. 130

'OFF-AIR' FREQUENCY STANDARD

CIRCLE NO. 131

Variants from
£249+VAT

- Provides 10MHz, 5MHz & 1MHz
- Use it for calibrating equipment that relies on quartz crystals, TCXOs, VXCOs, oven crystals
- Phase locks to DROITWICH (rubidium controlled and traceable to NPL)
- For ADDED VALUE also phase locks to ALLOUIS (cesium controlled and traceable to OP — French eq to NPL)
- British designed and British manufactured
- Options available include enhanced receiver, sine wave outputs and 13MHz output for GSM. Prices on application.

Output frequencies – 10MHz, 5MHz, 1MHz
Short term stability – better than $1x10^{-8}$ (1 sec)
Typical – $4x10^{-9}$ (1 sec)
Long term – tends to $2x10^{-12}$ (1000 sec)
Call for 'Off-Air' Standard list

TEST EQUIPMENT

CIRCLE NO. 132

We are well known for our quality, new and used Test Equipment. Our list is extensive, ranging through most disciplines. Call for details and a complete list

HALCYON ELECTRONICS
423, KINGSTON ROAD, WIMBLEDON CHASE, LONDON SW20 8JR
SHOP HOURS 9-5.30 MON-SAT. TEL 0181-542 6383. FAX 0181-542 0340

Orbit 48
Mobile Programmer

STAG for PROGRAMMING POWER

Everything you need in one... No gimmicks... No adaptors... No after thoughts! The latest in design and technology from a company that understands and cares

- Designed to program EPROMs, EEPROMs, FLASH, Serial EEPROMs, and Micro-controllers as standard (without fragile adaptor add ons)
- Optional PLD docking module
- The latest in emulation techniques that others try to copy (including 8 & 16 bit devices)
- 16 Mbits RAM with expansion to 64 Mbits
- 8,16 and 32 bit formats
- Real Windows & DOS environments

Europe's largest programmer manufacturer

STAG PROGRAMMERS

call today on +44 (0)1707 332148
or fax +44 (0)1707 371503 for further information

All trade marks are acknowledged and respected

CIRCLE NO. 133 ON REPLY CARD

Isolating RS-232

Combined with opto-couplers, this pair of ICs isolates an RS-232 line to 1500V rms – without the need for an independent power source at the remote end of the link – as Douglas Clarkson explains.

An increasing level of connectivity between computers and electronic equipment – generally via the RS-232 COM port – provides a convenient universal approach to control and data logging.

Many applications demand high noise immunity and isolation. Standards for telecomms and electrical safety often demand isolation between a computer and its remote monitoring subsystem or sensors. In many data-capture applications, optically-isolated digital interfaces are available.

Increasingly, the RS-232 interface provides control, in addition to data transfer. This development is, for example, incorporated into the Harris *HI-7159A*, where a single RS-232 line can control and abstract data from a $5^1/_2$ digit a-to-d converter.

When considering electrical isolation, distinction is usually made between the 'cable' ground and the ttl/cmos logic system ground, as in **Fig. 1**. Generally, isolation is achieved through optical coupling but some newer isolation interfaces take advantage of capacitive coupling.

With a mains powered pc, the ground signal of the RS-232 interface is usually tied close to the mains ground and is therefore not floating.

Isolation criteria

Not only is data passed across an isolation interface, but it is usually level shifted from the ±10V or so RS-232 levels into cmos/ttl logic levels for the external logic system and vice versa, **Fig. 2**.

The level of electrical isolation required determines the specific solution. For isolation up to 1500V rms, a device such as the Newport *NM232DD* provides two incoming and two outgoing lines. This component is a convenient device, having the dc to dc converter unit and photo-electric devices pack-

Technical support

Maxim Components, Unit 3, Theale Technical Park, Station Road, Theale, Berkshire RG7 4XX, tel. 01734 303388, fax 305577. Newport Components, 4 Tanners Drive, Blakelands North, Milton Keynes, MK14 5NA, tel. 01908 615232, fax 617545.

A range of companies including Schott Corporation (type *67114760*), Mini-Magnetics (type *MM2557*) and BH Electronics (type *Q6471-1*) also provide suitable transformers.

Transformer alternatives

Newport manufactures a range of transformers, outlined below, providing a range of isolation levels for use with the *MAX250* and *MAX251* chipset.

Type	Isolation	Package
76250	1500V rms	DIP6
76250M	1500V rms	SM28
76250HVR	2000V rms	DIP6
76250HVRM	2000V rms	SM28
76250KV4	4000V rms	DIP6
76250KV4M	4000V rms	SM28
76250EN*	4000V rms	DIP6

* a special designed for *EN60950* approval.

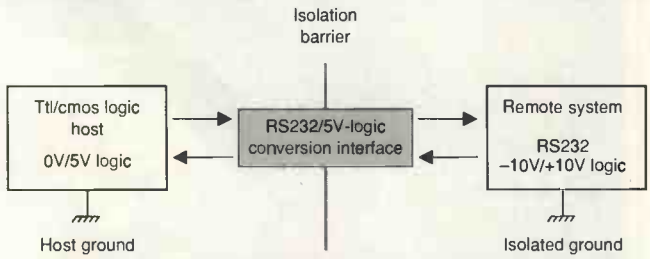

Fig. 1. Distinction between 'cable' ground at the remote end of an isolated RS-232 system, and the logic system ground, which will typically be the 0V potential of a pc.

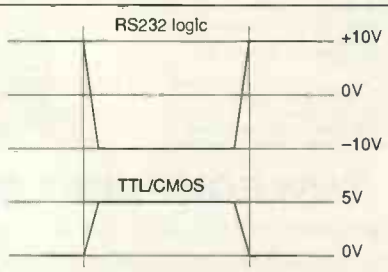

Fig. 2. RS-232 isolation systems usually involve both RS-232 and standard cmos/ttl logic levels.

aged together in a modest 24-pin module. A point worth noting with these devices is that when laying out a pcb, tracks in the mid-line zone under the device should be avoided.

A limitation of the *NM232DD* is the electrical isolation achievable between components. If isolation greater than 1500V rms is required, it is necessary to separate logic components and the dc-to-dc converter transformer. The *MAX250* and *MAX251* and their associated discrete components provide a convenient option for constructing such a module.

If connections of the *MAX250* and *MAX251* are appropriately routed, it is the quality of the optical components – especially that of the dc-to-dc converter transformer – which determines the level of isolation achievable.

Circuitry for RS-232 isolation

Figure 3 outlines the Maxim chip set with *4N26* opto-isolators. Such a configuration should be capable of transmitting and receiving at rates of 19.2kbit/s. Using the higher specification *6N136* with external pull-up resistors, rates of 90kHz can be achieved. This is also the case for *6N136*, but their pin-out is different, **Fig. 4**.

Standard eight-pin devices in DIL packages usually have 0.3in row separation. The *6N136W* set of opto-isolator devices are 0.4in wide and provide increased isolation protection.

In the *MAX250*, a pair of open-drain n-channel mosfets drive an external 1:1 isolation transformer in push-pull fashion at 150kHz and 50% duty cycle. This provides nominal voltage rails of +10V and –10V around the ground of the remote, isolated side. These rails power the transmitters and receivers in the *MAX251*. In addition, these supply lines can provide current for limited additional circuitry on the remote side.

All four driver outputs of the *MAX250* source 7mA via internal current sources. They do not require limiting resistors when driving grounded opto-coupler leds or cmos/ttl logic inputs. RS-232 inputs and outputs of the MAX251 comply with all EIA RS-232 and CCITT V.28 specifications. Received outputs R1L and R2L source 7mA and can drive opto-coupler inputs without external current limiting resistors.

The *MAX250* has a shutdown facility which activates when the shutdown input is high. On restoring the shutdown input low, the power rails establish themselves usually within 2ms. During shutdown, total power consumption of the chip set is around 5μW – a convenient power saving option for battery equipment.

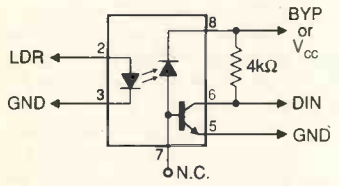

Fig. 4. High speed 6N136 couplers improve speed, but their pin-out is different.

Figure 5 indicates a recommended pcb layout for the *MAX250/MAX251* chipset with a generic transformer. A key design element is to prevent any tracks from crossing the isolation barrier. In the specified circuit, a single or double-sided board can be used. Thicker lines shown are on the underside of the board. Lines broken by a thin line can either go on the top board or bottom side, with jumpers where the thin lines appear.

Summary

The *MAX250* and *MAX251* are convenient building blocks for providing electrical isolation in excess of 1500V rms between RS-232 and ttl/cmos logic systems. Within this design framework, manufacturers are also developing higher isolation properties into both optical isolators and transformers in order to improve the levels of isolation attainable. ■

Fig. 3. Standard configuration of MAX250/MAX251 chipset featuring low cost 4N26 opto-isolators.

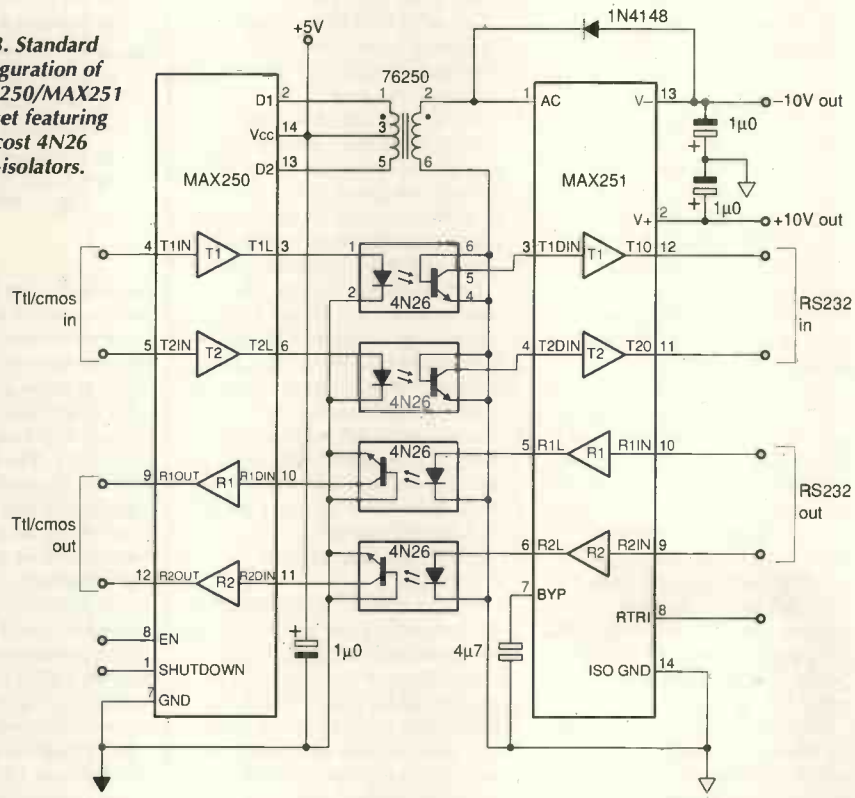

Fig. 5. Recommended pcb board layout for the MAX250/MAX251 chip set. The key element of layout is to prevent tracks from crossing the isolation barrier.

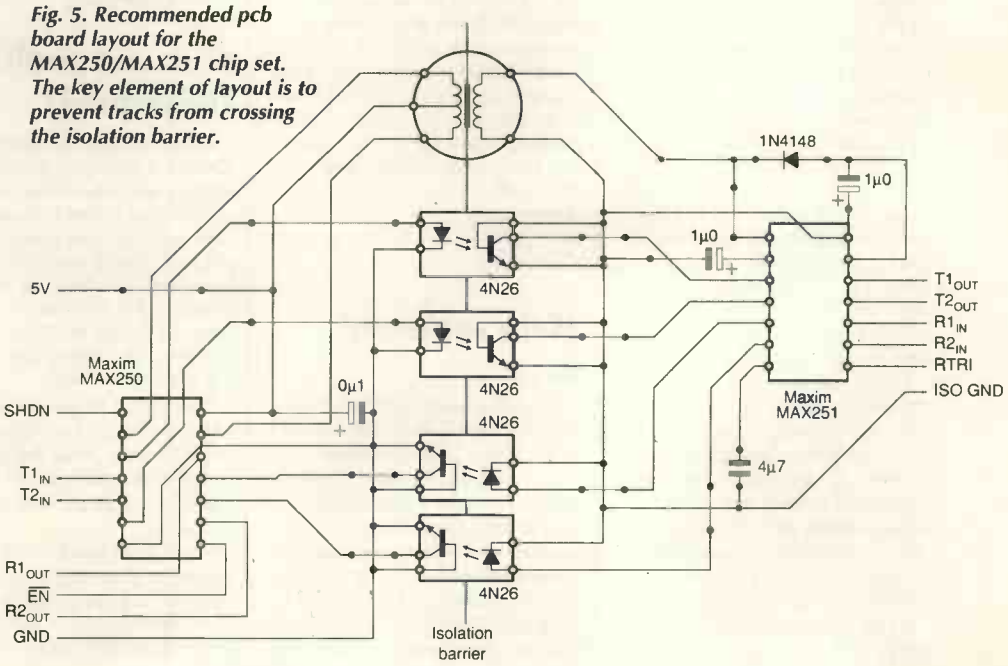

LETTERS

Letters to *"Electronics World"* Quadrant House, The Quadrant, Sutton, Surrey, SM2 5AS

Shifting cultures

David Manner's may be correct in asserting that there is little chance of any Brit capturing the public imagination with what they are doing in electronics. But whose fault is that?

Sir Clive was adept at spotting opportunities for wringing the last drop of processing power from available technology, but it is difficult to remember anything he did which has had a lasting impact.

Journalists presented him as the archetypal egghead and building an electric car was made to seem more exciting than say, the innovation of putting sails on oil tankers.

Ignored in Britain the idea of sails has been thought good enough to raise Japanese interest. No doubt they will be ready to sell the technology back to us if given the opportunity.

Acorn Computers is another example of British innovation ignored. The company's chips are sold back to us in the Apple Newton, Samsung, TI, Sharp, IBM, DEC products, and GEC/Plessey produces ARM based products under licence.

Bill Gates is not the 'richest man on the planet' because of his technical brilliance. The UK media is ever willing to give him oodles of free publicity, while our home grown innovators are at best ignored. Even our technical and computing journalists seem to want to wait for another Sir Clive to come along, rather than to look at the technology and evaluate it for themselves.

Les May
Rochdale
Lancashire

In last month's editorial I felt Dave Manners was too quick to write off the UK electronics industry. All is not lost in UK Electronics where, there are many fast growing, exciting entrepreneurial companies like my own emerging.

The Electronics – and especially the Semiconductor Industry – is truly International. To be successful in this business you must think globally yet act locally. This means you should employ staff internationally but concentrate specific activities in a particular country, where this gives you the greatest strategic advantage.

As the business is truly global and the prize of success goes to a few winners in a particular space, it is important to apply and deploy your energies to ensure you are the world's best in all you do.

Following through on this, all companies in electronics or information technology need to 'partner for success'.

As the black and white films of 'men in white coats' show in the engineering companies of the early fifties it was appropriate to do everything yourself, design, machine shop, spray shop, drawing office, production of every detailed part.

Today however, low cost, short time to market and flexibility are key strategic weapons in being a global player. So it is necessary to harness your resources to be able to respond to rapid change. For example as the life cycle of a pc today is only eight months, it is important to launch your product on time, control your inventory and to be sure your next product is available and better than the competition.

Another trend of large corporations has been what I call 'downsizing' or the Americans call 'right sizing'. This is the need in corporations to shed thousands of jobs in order to re-establish competitiveness from a cost point of view. Every electronics job today is a global job. In the West, we compete with our brain power and more automation with a hard working lower paid worker in a less developed part of the world.

It is vital that we concentrate in our research and development programmes on exploitation, job and wealth creation as the more esoteric research activities of the past. Thus in the European Fourth Programme the emphasis is rightly more market and exploitation oriented than previously.

Robin Saxby
MD, Advanced RISC Machines
Cambridge

Help someone hear

Can anyone solve a problem that I have wrestled with for some time? I would like to help my mother overcome a specific type of hearing disability, which she and many others suffer from. The right solution could dramatically improve her quality of life.

Conventional hearing aids help under ideal conditions but their ultra compact size obviously reduces their performance. For people like my mother, uniform sound amplification is not sufficient as they hear different frequencies at significantly different sound levels.

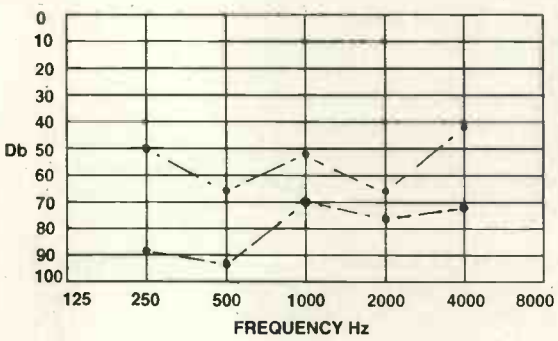

Can anyone design a hearing aid circuit to compensate for this type of non-linear hearing impediment?

For people like my mother, uniform sound amplification is not sufficient as their sensitivity to different frequencies varies significantly with sound level. The graph shows the results of her latest hospital test, for example.

My challenge is to create a pocket sized, programmable amplification unit which would process the greatest number of frequency ranges with the highest possible sound quality. Cost or appearance is not a serious consideration.

If any reader is willing to rise to the challenge, I will gladly provide whatever information and help that I can.

Hayden Sykes
Bedlington
Northumberland

Delayed audio unjustified?

Douglas Self has described Ben Duncan's method of scientific enquiry as to take someone else's circuit, alter it until it doesn't work very well, and then rubbish the original. That is a pretty fair summary of his Delayed Audio Signals – *EW&WW* May 1995 – which is largely a critique of one section of my Ironing Out Distortion – *EW&WW* Jan 1995.

Readers can be assured that my original circuit for compensating low-frequency phase and group delay (as distinct from Mr. Duncan's mutilation of it) performs exactly as I claimed.

Mr. Duncan states that my phase-compensation method requires "...an exact ratio between three electrolytics...". In fact the original circuit contains two relevant capacitors, only one of which is an electrolytic. Everything Duncan says about tolerances should be divided by three for a start.

I don't know where Duncan got the values he attributes to me in his Fig. 1. Inspection of any audio power amplifier circuit I have ever published will show that low-frequency phase-compensating capacitor – C_{F3} in my Fig. 11 – is somewhere around 1-2μF, and circuit-board layouts show it to be a non-electrolytic type. Usually I lay this capacitor out as a main unit somewhat less than the nominal value, plus a small parallel select-on-test tweak. This involves about five minutes' work with a square-wave generator and oscilloscope at the initial setting up of an amplifier, and the whole question of tolerances becomes irrelevant.

Mr. Duncan's approach to low-frequency group delay is to provide a gigantic time constant for the dominant pole; this is 1s in his Fig. 1 compared with 30ms for my unmutilated original. It is a fact of life that real audio amplifiers are occasionally subjected to overdrive. It is also a fact that real audio waveforms are unsymmetrical. When an amplifier is overdriven by an unsymmetrical waveform, excess charge accumulates on the low-frequency capacitors and this charge must dissipate before the amplifier returns to normal operation.

My original recovers about 30 times faster than Duncan's circuit. There was a reason behind my choice of component values.

Duncan makes a number of other assertions which he should substantiate before readers take them seriously.

Please justify the statement that "...without hundreds of volts of lf headroom extension, Cherry's phase compensation can in practice only be used once or twice." Two parts to the answer, please.

SMALL SELECTION ONLY LISTED – EXPORT TRADE AND QUANTITY DISCOUNTS – RING US FOR YOUR REQUIREMENTS WHICH MAY BE IN STOCK

HP New Colour Spectrum Analysers
HP141T+8552B IF + 8553B RF – 1KHz–110Mc/s – £700.
HP141T+8552B IF + 8554B RF – 100KHz–1250Mc/s – £900.
HP141T+8552B IF + 8556A RF – 20Hz–300KHz – £700.
Special Offer just in from MOD Qty 40 HP8555A RF Units 10Mc/s – 18GHzS.
HP141T+8552B IF + 8555A 10Mc/s–18GHzS – £1200.
HP ANZ Units Available separately – New Colours – Tested
HP141T Mainframe – £350.
HP8552B IF – £300.
HP8553B RF 1KHz to 110Mc/s – £200.
HP8554B RF 100KHz to 1250Mc/s – £500.
HP8555A RF 10Mc/s to 18GHzS – £800.
HP8556A RF 20Hz to 300KHzS – £250.
HP8443A Tracking Generator Counter 100KHz–110Mc/s – £300.
HP8445B Tracking Preselector DC to 18GHz – £350.
HP3580A 5Hz – 50KHz ANZ – £750 – £1000.
HP3582A .02Hz to 25.6KHz – £2k.
HP8568A 100Hz–1500Mc/s ANZ – £6k.
HP8569B 10Mc/s–22GHz ANZ – £6k.
HP Mixers are available for the above ANZ's to 40GHz
TEK 492 – 50KHz – 18GHz Opt 1+2 – £4k–£4.2k.
TEK 492 – 50KHz – 18GHz Opt 1+2+3 – £4.5k.
TEK 492P – 50KHz – 21 GHz Opt 1+2+3 – £5k.
TEK 494AP 1KC/S – 21GHz – £7k.
TEK 496P 1KHz–1.8GHz – £4k.
TEK 5L4N 0–100KHz – £400.
TEK 7L5 + L1 – 20Hz–5Mc/s – £700.
TEK 7L5 + L3 – Opt 25 Tracking Gen – £900.
TEK 7L12 – 100KHz–1800Mc/s – £1000.
TEK 7L18 – 1.5–60GHzs – £1500.
TEK 491 10Mc/s–12.4GHzs–40GHzs – £750. 12.4Ghzs–40Ghzs with Mixers.
Tektronix Mixers are available for above ANZ to 60GHzs
Systron Donner 763 Spectrum ANZ + 4745B Preselector .01–18GHz + Two Mixers 18–40GHz in Transit Case – £3k.
HP8673D Signal Generator .05–26.5GHz – £20k.
Systron Donner 1618B Microwave AM FM Synthesizer 50Mc/s 2–18GHzs R&S SWP Sweep Generator Synthesizer AM FM 4–2500Mc/s – £3.5k.
ADRET 3310A FX Synthesizer 300Hz–60Mc/s.– £600.
HP8640A Signal Generators – 1024Mc/s – AM FM – £800.
HP3717A 70Mc/s Modulator – Demodulator – £500.
HP8651A RF Oscillator 22KC/S – 22Mc/s.
HP5316B Universal Counter A+B.
HP6002A Power Unit 0–5V 0–10A 200W.
HP6825A Bipolar Power Supply Amplifier.
HP461A–465A–467A Amplifiers.
HP81519A Optical Receiver DC–400Mc/s.
HP Plotters 7470A–7475A.
HP3770A Amplitude Delay Distortion ANZ.
HP3770B Telephone Line Analyser.
HP8182A Data Analyser.
HP59401A Bus System Analyser.
HP6260B Power Unit 0–10V 0–100 Amps.
HP3782A Error Detector.
HP3781A Pattern Generator.
HP3730A+3737A Down Convertor Oscillator 3.5–6.5GHz.
HP Microwave Amps 491–492–493–494–495–1GHz–12.4GHz – £250.
HP105B Quartz Oscillator – £400.
HP5087A Distribution Amplifier.
HP6034A System Power Supply 0–60V 0–10A–200W – £500.
HP6131C Digital Voltage Source+ – 100V ½ Amp.
HP4275A Multi Frequency L.C.R. Meter.
HP3779A Primary Multiplex Analyser.
HP3779C Primary Multiplex Analyser.
HP8150A Optical Signal Source.
HP1630G Logic Analyser.
HP5316A Universal Counter A+B.
HP5335A Universal Counter A+B+C.
HP59501B Isolated Power Supply Programmer.
HP8901A Modulation Meter AM – FM – also 8901B.
HP5370A Universal Time Interval Counter.
Marconi TF2370 – 30Hz–110Mc/s 75OHM Output (2 BNC Sockets+Resistor for 50OHM MOD with Marconi MOD Sheet supplied – £650.
Marconi TF2370 30Hz–110Mc/s 50 ohm Output – £750.
Marconi TF2370 as above but late type – £850.
Marconi TF2370 as above but late type Brown Case – £1000.
Marconi TF2374 Zero Loss Probe – £200.
Marconi TF2440 Microwave Counter – 20GHz – £1500.
Marconi TF2442 Microwave Counter – 26.5GHz – £2k..
Marconi TF2305 Modulation Meter – £2.3k.
Racal/Dana 2101 Microwave Counter – 10Hz–20GHz – £2k.
Racal/Dana 1250–1261 Universal Switch Controller + 200Mc/s PI Cards.
Racal/Dana 9303 True RMS Levelmeter+Head – £450. IFFE – £500.
TEKA6902A also A6902B Isolator – £300–£400.
TEK 1240 Logic Analyser – £400.
TEK FG5010 Programmable Function Generator 20Mc/s – £600.
TEK2465A 350Mc/s Oscilloscope – £2.5k + probes – £150 each.
TEK CT-5 High Current Transformer Probe – £250.
TEK J16 Digital Photometer + J6523–2 Luminance Probe – £300.
TEK J16 Digital Photometer + J6503 Luminance Probe – £250.
ROTEK 320 Calibrator + 350 High Current Adaptor AC–DC – £500.
FLUKE 5102B AC–DC Calibrator – £4k.
FLUKE 1120A IEEE – 488 Translator – £250.
Tinsley Standard Cell Battery 5644B – £500.
Tinsley Transportable Voltage Reference – £500.
FLUKE Y5020 Current Shunt – £150.
HP745A+746A AC Calibrator – £600.
HP8080A MF + 8091A 1GHz Rate Generator + Two 8093A 1GHz Amps + 15400A – £800.
HP54200A Digitizing Oscilloscope.
HP11729B Carrier Noise Test Set .01–18GHz – LEF – £2000.
HP3311A Function Generator – £300.
Marconi TF2008 – AM-FM signal generator – also sweeper – 10Kc/s – 510Mc/s – from £250 – tested to £400 as new with manual – probe kit in wooden carrying box.
HP Frequency comb generator type 8406 – £400.
HP Vector Voltmeter type 8405A – £400 new colour.
HP Sweep Oscillators type 8690 A & B + plug-ins from 10Mc/s to 18GHz also 18-40GHz. P.O.R..
HP Network Analyzer type 8407A + 8412A + 8501A – 100Kc/s – 110Mc/s – £500 – £1000.
HP Amplifier type 8447A – 1-400Mc/s £200 – HP8447A Dual – £300.
HP Frequency Counter type 5340A – 18GHz £1000 – rear output £800.
HP 8410 – A – B – C Network Analyzer 110Mc/s to 12GHz or 18GHz – plus most other units and displays used in this set-up – 8411a – 8412 – 8413 – 8414 – 8418 – 8740 – 8741 – 8742 – 8743 – 8746 – 8650. From £1000.
Racal/Dana 9301A – 9302 RF Millivoltmeter – 1.5-2GHz – £250-£400.
Racal/Dana Modulation Meter type 9009 – 8Mc/s – 1.5GHz – £250.
Marconi RCL Bridge type TF2700 – £150.
Marconi/Saunders Signal Sources type – 6058B – 6070A – 6055A – 6059A – 6057A – 6056 – £250-£350. 400Mc/s to 18GHz.
Marconi TF1245 Circuit Magnification meter + 1246 & 1247 Oscillators – £100-£300.
Marconi microwave 6600A sweep osc., mainframe with 6650 PI – 18-26.5GHz or 6651 PI – 26.5-40GHz – £1000 or PI only £600. MF only £250.
Marconi distortion meter type TF2331 – £150. TF2331A – £200.

Tektronix Plug-Ins 7A13 – 7A14 – 7A18 – 7A24 – 7A26 – 7A11 – 7M11 – 7S11 – 7D10 – 7S12 – S1 – S2 – S6 – S52 – PG506 – SC504 – SG502 – SG503 – SG504 – DC503 –DC508 – DD501 – WR501 – DM501A – FG501A – TG501 – PG502 – DC505A – FG504 – 7B80 + 85–7B92A
Gould J3B test oscillator + manual – £150.
Tektronix Mainframes – 7603 – 7623A – 7613 – 7704A – 7844 – 7904 – TM501 – TM503 – TM506 – 7904A – 7834 – 7623 – 7633.
Marconi 6155A Signal Source – 1 to 2GHz – LED readout – £400.
Barr & Stroud Variable filter EF3 0.1Hz – 100kc/s + high pass + low pass – £150.
Marconi TF2163S attenuator – 1GHz. £200.
Farnell power unit H60/50 – £400 tested. H60/25 – £250.
Racal/Dana 9300 RMS voltmeter – £250.
HP 8750A storage normalizer – £400 with lead + S.A or N,A Interface.
Marconi TF2330 – or **TF2330A** wave analysers – £100-£150.
Tektronix – 7S14 – 7T11 – 7S11 – 7S12 – S1 – S2 – S39 – S47 – S51 – S52 – S53 – 7M11.
Marconi mod meters type TF2304 – £250.
HP 5065A rubidrum vapour FX standard – £1.5k.
Systron Donner counter type 6054B – 20Mc/s – 24GHz – LED readout – £1k.
Racal/Dana 9083 signal source – two tone – £250.
Systron Donner – signal generator 1702 – synthesized to 1GHz – AM/FM – £600.
Tektronix TM515 mainframe + **TM5006** mainframe – £450 – £850.
Farnall electronic load type RB1030-35 – £350.
Racal/Dana counters – 9904 – 9905 – 9906 – 9915 – 9916 – 9917 – 9921 – 50Mc/s – 3GHz – £100-£450 – all fitted with FX standards.
HP4815A RF vector impedance meter c/w probe – £500-£600.
Marconi TF2092 noise receiver. A, B or C plus filters – £100-£350.
Marconi TF2091 noise generator. A, B or C plus filters – £100-£350.
Marconi 2017 S/G 10Khz – 1024MHz.
HP180TR, HP182T mainframes £300-£500.
Philips panoramic receiver type PM7900 – 1 to 20GHz – £400.
Marconi 6700A sweep oscillator + 18GHz PI's available.
HP8505A network ANZ + 8503A S parameter test set + 8501A normalizer – £4k.
HP8505 network ANZ 8505 + 8501A + 8503A.
Racal/Dana VLF frequency standard equipment. Tracer receiver type 900A + difference meter type 527E + rubidium standard type 9475 – £2750.
HP signal generators type 626 – 62B – frequency 10GHz – 21GHz.
HP 432A – 435A or B – 436A – power meters + powerheads – Mc/s – 40GHz – £200-£1000.
Bradley oscilloscope calibrator type 192 – £600.
HP8614A signal generator 800Mc/s – 2.4GHz, new colour £400.
HP8616A signal gen 1.8GHz – 4.5GHz, new colour £400.
HP 3325A syn function gen 20Mc/s – £1500.
HP 3336A or B syn level generator – £500-£600.
HP 3586B or C selective level meter – £750-£1000.
HP 3575A gain phase meter 1Hz – 13Mc/s – £400.
HP 8683D S/G microwave 2.3 – 13GHz – opt 001 – 003 – £4.5k.
HP 8660 A-B-C syn S/G. AM + FM + 10Kc/s to 110Mc/s PI – 1Mc/s to 1300Mc/s – 1Mc/s to 2600Mc/s – £500-£2000.
HP 8640B S/G AM-FM 512Mc/s or 1024Mc/s. Opt 001 or 002 or 003 – £800-£1250.
HP 86222BX Sweep PI – 01 – 2.4GHz + ATT – £1750.
HP 8629A Sweep PI – 2 – 18GHz – £1000.
HP 86290B Sweep PI – 2 – 18GHz – £1250.
HP 86 Series PI's in stock – splitband from 10Mc/s – 18.6GHz – £250-£1k.
HP 8620C Mainframe – £250. IEEE – £500.
HP 8615A Programmable signal source – 1MHz – 50Mc/s – opt 002 – £1k.
HP 8601A Sweep generator .1 – 110Mc/s – £300.
HP 3488A HP – IB switch control unit – £500 + control modules various – £175 each.
HP 8160A 50Mc/s programmable pulse generator – £1000.
HP 853A MF ANZ – £1.5k.
HP 8349A Microwave Amp 2 – 20GHz Solid state – £1500
HP 3585A Analyser 20Hz – 40Mc/s – £4k.
HP 8569B Analyser .01 – 22GHz – £5k.
HP 3580A Analyser 5Hz – 50kHz – £1k.
HP 1980B Oscilloscope measurement system – £600.
HP 3455A Digital voltmeter – £500.
HP 3437A System voltmeter – £300.
HP 3581C Selective voltmeter – £250.
HP 5370A Universal time interval counter – £450.
HP 5335A Universal counter – 200Mc/s – £500.
HP 5328A Universal counter – 500Mc/s – £250.
HP 6034A System power supply – 0 – 60V – 0 – 10 amps – £500.
HP 5150A Thermal printer – £250.
HP 1645A Data error analyser – £150.
HP 4437A Attenuator – £150.
HP 3717A 70Mc/s modulator – £400.
HP 3710A – 3715A – 3716A – 3702B – 3703B – 3705A – 3711A – 3791B – 3712A – 3793B microwave link analyser – P.O.R.
HP 3730A+B RF down converter – P.O.R.
HP 3552A Transmission test set – £400.
HP 3763A Error detector – £500.
HP 3764A Digital transmission analyser – £600.
HP 3770A Amp delay distortion analyser – £400.
HP 3780A Pattern generator detector – £400.
HP 3781A Pattern generator – £400.
HP 3781B Pattern generator (bell) – £300.
HP 3782A Error detector – £400.
HP 3782B Error detector (bell) – £300.
HP 3785A Jitter generator + receiver – £750-£1k.
HP 8006A Word generator – £100-£150.
HP 8016A Word generator – £250.
HP 8170A Logic pattern generator – £500.
HP 59401A Bus system analyser – £350.
HP 59500A Multiprogrammer HP – IB – £300.
Philips PM5390 RF syn – 0.1 – 1GHz – AM + FM – £1000.
S.A. Spectral Dynamics SD345 spectrascope 111 – LF ANZ – £1500.
Tektronix R7912 Transient waveform digitizer – programmable – £400.
Tektronix TR503 + TM503 tracking generator 0.1 – 1.8GHz – £1k – or TR502.
Tektronix 576 Curve tracer + adaptors – £900.
Tektronix 577 Curve tracer + adaptors – £900.
Tektronix 1502/1503 TDR cable test set – £1000.
Tektronix AM503 Current probe + TM501 m/frame – £1000.
Tektronix SC501 – SC502 – SC503 – SC504 oscilloscopes – £75-£350.
Tektronix 465 – 465B – 475 – 2213A – 2215 – 2225 – 2235 – 2245 – 2246 – £250-£1000.
Kikusui 100Mc/s Oscilloscope COS6100M – £350.
Nicolet 3091 LF oscilloscope – £400.
Racal 1991 – 1992 – 1988 – 1300Mc/s counters – £500-£900.
Fluke 80K-40 High voltage probe in case – BN – £100.
Racal Recorders – Store 4 – 4D – 7 – 14 channels in stock – £250 – £500.
Racal Store Horse Recorder & control – £400-£750 Tested.
EIP 545 microwave18GHz counter – £1200.
Fluke 510A AC ref standard – 400Hz – £200.
Fluke 355A DC voltage standard – £300.
Wiltron 610D Sweep Generator + 6124C PI – 4 – 8GHz – £400.
Wiltron 610D Sweep Generator + 61084D PI – 1Mc/s – 1500Mc/s – £500.
Time Electronics 9814 Voltage calibrator – £750.
Time Electronics 9811 Programmable resistance – £600.
Time Electronics 2004 D.C. voltage standard – £1000.
HP 8699B Sweep PI YIG oscillator .01 – 4GHz – £300. 8690B MF – £250. Both £500.
Schlumberger 1250 Frequency response ANZ – £1500.
Dummy Loads & power att up to 2.5 kilowatts FX up to 18GHz – microwave parts new and ex equipt – relays – attenuators – switches – waveguides – Yigs – SMA –APC7 plugs – adaptors.
B&K Items in stock – ask for list.
W&G Items in stock – ask for list.
Power Supplies Heavy duty + bench in stock – Farnell – HP – Weir – Thurlby – Racal etc. Ask for list.

ITEMS BOUGHT FROM HM GOVERNMENT BEING SURPLUS. PRICE IS EX WORKS. SAE FOR ENQUIRIES. PHONE FOR APPOINTMENT OR FOR DEMONSTRATION OF ANY ITEMS, AVAILABILITY OR PRICE CHANGE. VAT AND CARRIAGE EXTRA

ITEMS MARKED TESTED HAVE 30 DAY WARRANTY. WANTED: TEST EQUIPMENT–VALVES–PLUGS AND SOCKETS–SYNCROS–TRANSMITTING AND RECEIVING EQUIPMENT ETC.

Johns Radio, Whitehall Works, 84 Whitehall Road East, Birkenshaw, Bradford BD11 2ER. Tel. No: (01274) 684007. Fax: 651160

CIRCLE NO. 134 ON REPLY CARD

b) where do large infrasonic signals come from? – give us the frequencies and amplitudes relative to peak audio. And no new safety factors, please. All of these should have been included in the pre-compensation design.

Please justify the statement that "...scaling *R* up and *C* down is just not practical on the grounds of noise, microphony, and increased electrostatic/emi sensitivity." Each ground separately please, and again some numbers rather than handwaving.

What should readers understand by the terms damping and Q in connection with my circuit, when all its poles are on the negative real axis and the step response does not contain any decaying sinusoids? Precise definitions, please. (Incidentally, if Duncan cares to simulate 70 of his BDR amplifiers in cascade, with step input, he will find the same oscillatory behaviour he is so critical of—except that everything is much slower, Duncan will need to simulate for about 20 seconds in order to see it die away.)

Edward M. Cherry,
Monash University
Australia

Sallen & Key distortion

The well-known Sallen and Key active filter circuit appears as an 'application' in the data-sheets of low-distortion op-amps, such as the *OPA2406* and the *LM833*, both dual devices. Distortions of 0.0003% (3μV/V, 3ppm) and 0.002% (20ppm) respectively are claimed.

The Sallen and Key low-pass shown here, with an F_c of 1kHz and Q of 1.6, was intended to reduce the already low harmonic content of a 1kHz 1Vrms source, but had the opposite effect; for example, an *OPA2406* section generated 270 ppm second harmonic, and an *LM833* section generated 150 ppm; raising the input to 2V gave 540 and 290 ppm.

Changing to a Rauch configuration – i.e. an inverting input – solved the immediate problem; a *TL072* section did the job.

Further investigation showed that, in the straight follower connection, all three types add less than 2ppm; the distortion comes when there is resistance (impedance) in series with the non-inverting input – as there necessarily is in the Sallen and Key circuit.

The table shows some readings of the internally-generated second harmonic with a 100k input resistor only (less than one millionth of the data-sheet input resistance). Other resistor values give roughly proportional distortion.

Whatever the mechanism may be, one must conclude that the Sallen and Key circuit is not generally usable for hi-fi, at least with these devices.

AD Ryder
Bolton
Lancashire

Sallen and Key filter was found to introduce distortion. Changing to Rauch solved the problem.

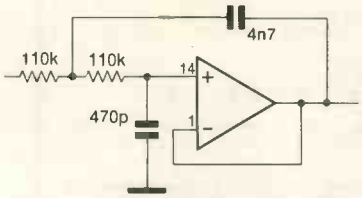

Signal	OPA2406	TL072	LM833
1V rms	59 ppm	50 ppm	32 ppm
2V rms	114 ppm	100 ppm	61 ppm

Need we debate feedback?

In the October issue, p. 887, Doug Self calls for an informed debate on the amount of global feedback that can be considered safe in an audio power amplifier.

I must admit that I have a lot of time for Self and his powers of rational thought. I think the concept of a blameless amplifier is a useful one in an audio systems context. I admire his patience in dealing with the seemingly inexhaustible supply of sloppy thinking which been directed at him recently.

However, I am not sure that a debate is even necessary because there isn't a problem. All we are trying to do is amplify a waveform over a relatively small voltage and frequency range by electronic standards – a straightforward control problem.

Audio is not the only area in which feedback is used in a control system. These crop up in countless aerospace, marine, defence and industrial applications. Why is it that there is no debate about the criteria for stability in these communities?

In reality, audio is seldom designed as a system. Too much effort is expended in one area and not enough in another. To debate amplifiers is missing the point. Today's amplifiers have been refined to the point where they can be blameless, yet they are invariably connected to loudspeakers which are as blameless as Attila the Hun.

Most of today's hi-fi loudspeakers produce distortions, both linear and non-linear, which exceed those of amplifiers by orders of magnitude, yet they are never quoted. Try putting a squarewave into a loudspeaker and see what comes out – generally garbage.

I have yet to find a passive crossover which can meet the criteria of blamelessness. If you own a blameless amplifier with only one channel per loudspeaker you cannot hear blameless audio.

Cabinet resonances and other energy storage mechanisms add a layer of grime which swamps the *thd+N* of the preceding electronics. A loudspeaker effectively has a signal-to-noise ratio because of these effects, yet it is never measured. Cabinet diffraction produces a polar diagram like a hedgehog.

With today's loudspeakers in series, further refinement of already blameless amplifiers and any debate about them is a complete waste of time. All that can be done is to make them cheaper. As Self says, there are better things to do. ■

John Watkinson,
FAES

Updates

Bigger bass smaller box

These are corrections to Fig. 1 of Jeff Macaulay's full-range loudspeaker design, 'Bigger bass, smaller box', which appeared in the June issue.

There are several resistors marked $R_{7,8,9}$. All of these are 10k except the R_9 associated with A_6. This is 22k. Capacitors $C_{26,27}$ are 100μF decoupling for the op-amps. Resistors $R_{31\text{-}36}$, listed as 100Ω, were originally used to further decouple the op-amp supply pins. Due to persistent problems with 12V regulator parasitics, Jeff finally increased these to 2kΩ and connected them directly ro the supply lines.

Probing for switching losses

Due to typographical errors, the term mAs instead of μAs occurred several times in the article 'Probing for switching losses' in the October issue. All the errors occurred on page 832 and are as follows – 76.5mAs, line 35, 8mAs, line 48 and 8mAs/50 line 51. Apologies.

Delayed voice recorder

This components list for the article delayed voice reorder in the September 1995 issue was overlooked – apologies.

IC_1	MSM6310	OKI	R_{47}	270Ω*	
$IC_{2,3}$	MSM41256A	OKI	R_{51}	68kΩ*	
IC_4	LM317LZ	NS	R_{52}	12kΩ*	
IC_5	SL6270	Plessey	R_{55}	91Ω*	
$IC_{6,7}$	14053BD†		R_{56}	470Ω*	
IIC_8	14044BD†		C_2	1μF poly	
IC_9	MSC1191	OKI	$C_{3,4}$	22pF cer.	
IC_{10}	LM324M	NS	$C_{5\text{-}7}$	33μF‡	
$IC_{11\text{-}15}$	14011BD†		$C_{8,27}$	100nF cer.	
$IC_{16\text{-}17}$	14001BD†		$C_{9,20}$	220nF cer.	
$Tr_{1\text{-}5}$	MPSA14†		$C_{10,17}$	4.7nF cer. chip	
Tr_6	BC847†		C_{12}	1nF cer. chip	
Tr_7	MP2222A†		$C_{13,23}$	220μF‡	
Tr_8	MPS6531†		$C_{14,24}$	10μF‡	
D_1	BAS16	Thomson	C_{15}	47μF‡	
D_2	HLMP1700	HP	C_{16}	068 μF‡	
D_3	BZX84C5V1	Thomson	$C_{18,19,22}$	100μF‡	
D_4	HLMP1790	HP	C_{21}	2.2nF cer. chip	
$R_{1\text{-}5\text{-}13,14}$	L08-1-R10K	Beckman	$C_{25,28}$	0,68μF‡	
$R_{6,41}$	15kΩ*		$C_{1,11,26,29,30}$	1μF‡	
R_7	12Ω*		SW_1	436230205	Secme
$R_{8,53}$	1kΩ*		SW_2	436231205	Secme
R_9	5k6Ω*		SW_3	JSA 1320-0201	SMK
R_{10}	220Ω*		SW_4	JSA 2220-0201	SMK
R_{11}	56Ω*		SW_5	JSB 1320-0101	SMK
$R_{12,59}$	390Ω*		SW_6	PB 710	Lorlin
$R_{15\text{-}22,29,37,}$	10kΩ*		SW_7	PVA 2	Farnell
$R_{44,60\text{-}62}$	10kΩ*		X_{tal}	MG3A-0800M20	Meiden
$R_{23\text{-}25}$	100kΩ*		$J_{1,2}$	SG 8035	SMK
$R_{28,30\text{-}34,40}$	100kΩ*		P_1	R0600416-10kΩ	Ruf
R_{26}	82kΩ*		P_2	0050-100 - 10kΩ	Ruf
$R_{27,49}$	33kΩ*		S_p	KDS 2908 -8Ω-0.1W	
$R_{35,54}$	1MΩ*		Kingstate		
$R_{36,57,58}$	22kΩ*		Mic	EM 76	LEM
$R_{38,48}$	3k3Ω*				
R_{39}	150Ω*				
$R_{42,43,50}$	47Ω*				
R_{45}	18kΩ*				
R_{46}	8k2Ω*				

$H_{1,2}$, $SW_{8,9}$, $M_{o,l}$ are built into the Olympus mechanism
†Motorola
* chip Roederstein
‡ 10V Tantalum

PERRYBEE (UK) LTD

We offer a comprehensive service designed to assist the OEM in the procurement of components and the search for new export markets.

- ★ With our own office in **Germany**, we offer access to all types of German products.
- ★ Component sourcing for actives and passives.
- ★ Market research service.
- ★ Export documentation and consolidation service.
- ★ **Prompt and professional response guaranteed.**

Perrybee (UK) Ltd,
Maple House, 8 Keveral Gardens, Seaton, Torpoint, Cornwall PL11 3JH

Tel: 01503 250354 Fax: 01503 250657

CIRCLE NO. 135 ON REPLY CARD

SCAN BAR CODES FOR £29.50
HEWLETT PACKARD HP71B

As easy to use as a calculator but as powerful as a computer

BARCODE READER
Smart wand
– Automatically recognises and decodes all major bar-code standards.

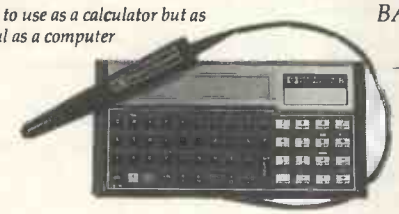

- A powerful set of basic functions, statements and operators – over 230 in all – many larger computers don't have a set of basic instructions in this complete.
- Advanced statistics functions enabling computations on up to 15 independent variables.
- Recursive subprograms and user defined functions.
- An advanced internal file system for storing programs and data – the HP71 has continuous memory – when you turn the computer off it retains programs and data.
- A keyboard that can be easily customised for your specific application.
- HP-1L Interface pre-installed to create a system that can print, plot, store, retrieve and display information. Control or read instruments or speak to other computers, 5000 bytes/sec. Built in ROM includes 46 separate commands. Interface to HP-1L, HP-1B, RS232C, GPIO or series 80. Includes connection cables.

These are second user systems ex DHSS are fully tested and working but have no programming (THAT IS UP TO YOU)

HP71B	£29.95
Bar-code Reader	£12.95
AC Power Supply (Works from batteries normally)	£4.95
Keyboard Overlay (Limited quantities)	£1.00
Unknown Program – Memory Modules (Limited quantities)	£3.00
Complete kit of HP71B, Bar-code Reader and power supply	£39.50

(Prices include VAT – delivery £3.00) (UK only)
(Currently selling in USA for US$500)
Allow 7 days for delivery

SPECIAL OFFER
Buy 2 Kits For **£59.00**

Other products at give-away prices
Numeric keypad for 'AT' computer
£5 + £2 Carriage (Carriage FREE if ordered with above).

INTERCONNECTIONS LTD
Unit 51, InShops, Wellington Centre, Aldershot, Hants GU11 5DB
Tel: (01252) 341900 Fax: (01293) 822786

CIRCLE NO. 136 ON REPLY CARD

NEW from Adept Scientific!

MExpress

At last — a powerful 4GL that lets you compile your routines as standalone executables!

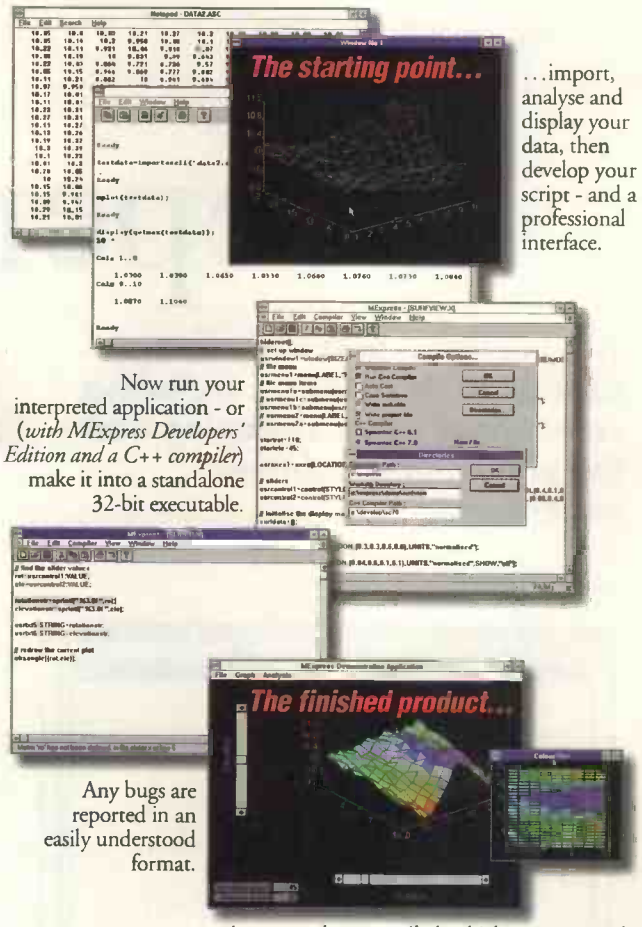

...import, analyse and display your data, then develop your script - and a professional interface.

Now run your interpreted application - or (*with MExpress Developers' Edition and a C++ compiler*) make it into a standalone 32-bit executable.

Any bugs are reported in an easily understood format.

...interpreted or compiled, whichever you need!

New MExpress lets you develop powerful 4GL applications and compile them as standalone windows .exe programs, or run them in interactive interpreted mode! ***MExpress*** offers fast and flexible programming and seamless integration of maths and graphics.

Call Adept Scientific today for more information or fill out the coupon below and send to us.

Adept Scientific plc
6 Business Centre West, Avenue One, Letchworth, Hertfordshire, SG6 2HB, UK
Tel: 01462 480055 Fax: 01462 480213
Email: mexpress@adeptscience.co.uk WWW: http://www.adeptscience.co.uk

Need more Information?

Please fill out and fax back or post this coupon to Adept Scientific for your FREE **MExpress** information pack!

Name
Telephone No.
Position
Company
Department
Address
Town
County
Post Code

ADEPT SCIENTIFIC

(01462) 480213 FastFax

or return to:
Adept Scientific plc
6 Business Centre West, Avenue One, Letchworth, Hertfordshire, SG6 2HB
Tel: (01462) 480055

© 1995 Adept Scientific plc. All Trademarks Recognised. All Rights Reserved

CIRCLE NO. 137 ON REPLY CARD

Deeper into dc Analysis

Owen Bishop looks at more aspects of dc analysis, including component value sweeping and the pitfalls of simulating oscillators.

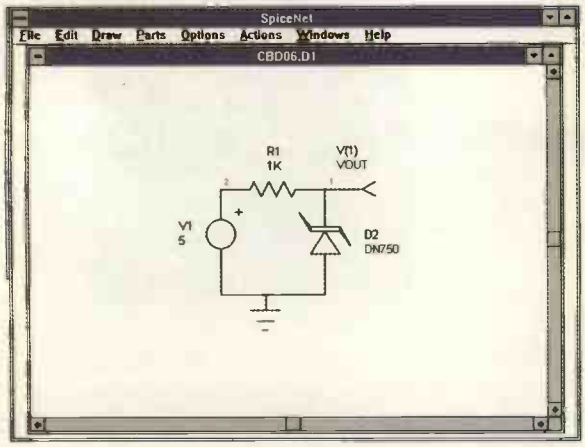

Fig. 1. This schematic of a zener diode stabiliser was produced using the SpiceNet software. Node numbers are displayed (in red), except for the ground line, which is node 0. The Y-shaped symbol is an optional way of indicating a test point.

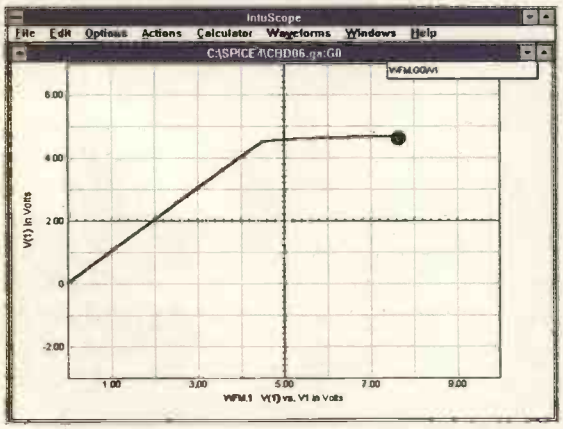

Fig. 2. Intuscope postprocessor software produces an oscilloscope-like display of the dc sweep of the zener stabiliser circuit. The zener, nominally 4.7V, produces a stabilised output at approximately 4.65V.

One useful feature of Spice is its ability to repeat the analysis while sweeping the values of components over a specified range. This allows the designer to check that the circuit is immune to variations due to component tolerances.

Temperature sweeps are used to confirm that circuit operation is reliable within a specified temperature range. Sweeping the value of a voltage source provides a convenient way of investigating the action of the simple zener diode voltage stabiliser of **Fig. 1**.

Nominal supply voltage (V1) is 6V, as shown in the *IsSpice* netlist, **Table 1**. For the dc analysis it is swept from 0V to 7.5V in steps of 2.5V. This more than covers a ±25% variation in supply voltage to the regulator. This netlist has a line beginning with the command 'include'. This is not a Spice command, which is why it is preceded by an asterisk, but is a direction to an *IsSpice* pre-processing routine to use the 'Diode.Lib' file to obtain the model for the diode.

Run the simulation, exit the analysis, then select Edit Text File. Clicking the 'Out' button displays the output file. As well as listing the netlist with the diode model expanded, the file has a table of thirty values of V(1) against V1. Note that V1 is the name of the voltage source, while V(1) is the symbol for the voltage at node 1.

As you might expect, Table 1 shows that V(1) is equal to V1 for all values of V1 up to 4.25V. From then on, current begins to flow through the diode and V(1) shows relatively small increases, finishing at 4.65V when V1 is 7.5V. The effect is better seen on the *Intuscope* display, **Fig. 2**.

Having seen that stabilisation is satisfactory with regard to supply voltage, the next step is to investigate the effects of varying the load. As well as a load resistor R2, **Fig. 3** has an additional dummy voltage source, sometimes referred to as a current meter. Spice computes node voltages but not branch currents.

In a simple circuit such as this it is easy to read off the voltages at node 2, and use a calculator to divide by the resistance of R2. This gives the currents through R2 at each step of the sweep, but results of such calculations are not then available for plotting by the computer.

As noted last month, Spice calculates the currents through voltage sources. If there is an active voltage source in a branch, find the current by asking Spice to PRINT or PLOT I(Vname), where Vname is the name of the source. If there is no active voltage source in the branch, place a dummy source there. This adds a complication to the netlist, but is the only way to get Spice to calculate the required current.

Some Spice-based simulators automatically calculate current through all devices, and this manoeuvre is not necessary. There is no active source in series with R2, so the netlist, **Table 2**, shows a dummy source V2, voltage 0V. The new circuit has different

node numbers, so the stabilised output is now from node 2. The command to sweep V1 is the same as before, but the .PRINT command now includes the output voltage and the current through the dummy source.

Spice can plot two or more quantities simultaneously, but plots them all on the same scale. Because the magnitude of the current is much less than that of the voltage, they need to be plotted separately, using two .PLOT commands. Incidentally, the .PRINT command is not essential, because the plots show all that is required. The reason for including it is that *Intuscope* takes its data from .PRINT, not from .PLOT, and it is intended to use *Intuscope* after the analysis to show voltage and current on the same axes.

Running the simulation produces a plot of V(2), formerly V(1), almost identical to the previous one, shaped like Fig. 2. When V1 is 5V or more the current through R2 is steady at 46μA – this is to be expected as R2 has a high value. Return to *IsEd*, edit the netlist to make R2 equal to 8.2kΩ and re-run the simulation. The current is now a more-or-less steady 560μA, varying from 542μA when the supply is 5V to 565μA when the supply is 7.5V. Try for a greater output current by re-editing R2 to 4.7kΩ – stabilisation does not occur until the supply is 6V or more, **Fig. 4**. *Intuscope* plots the output voltage and current on the same axes but with different scales, **Fig. 5**.

Table 1. Netlist used to investigate behaviour of the zener diode regulator circuit of Fig. 1.

```
CBDO6 - ZENER DIODE STABILISER,
4.7V
*INCLUDE DIODE.LIB
R1   2   1   1K
D2   0   1   DN750
V1   2   0   6
.DC  V1  0   7.5  0.25
.PRINT DC V(1)
.PLOT DC V(1)
.END
```

Table 2. Netlist of the zener diode stabiliser is now under test to find out how much current it can supply. Current is measured through the dummy voltage source *V2*.

```
CBD06a - ZENER DIODE STABILISER,
4.7v, with load
*INCLUDE DIODE.LIB
R1     1     3     1K
R2     2     0     100K
D4     0     3     DN750
V1     1     0     6
V2     3     2     0
.DC    V1    0     7.5     0.5
.PRINT DC    V(2)  I(V2)
.PLOT  DC    V(2)
.PLOT  DC    I(V2)
.END
```

Table 3. Plotting dc transfer characteristic of an NMOS transistor, using Spice's double-sweeping facility.

```
CBD06b - MOSFET transfer characteristic
*INCLUDE MOSFET.LIB
V2  3  0  8
M1  4  1  0  2   VN10KE
V3  3  4  0
V1  1  0  4
.DC V2 0  5  0.2 V1  3  5  0.2
.PRINT DC  I(V3)
.END
```

Double sweeping

In dc analysis, Spice is able to sweep two voltage or current sources simultaneously. The two sources and the extent of their sweeps are defined in the command line. The first source, inner variable, is swept over its whole range at each step in the sweep of the second source, outer variable.

Figure 6 shows a circuit for finding the transfer characteristic of a mosfet by sweeping the drain and gate voltages and measuring the resulting source current. The netlist, **Table 3**, refers the preprocessor to the mosfet library. Voltage V3 is the dummy source. Gate voltage V1 is swept from 3-5V in 0.2V steps. For each value of gate voltage, V2, drain-source voltage is swept from 0-5V in 0.2V steps.

The printout does not set out results in a way that can be readily interpreted, so a post-processor such as *Intuscope* is used to view them. This displays a set of curves, **Fig. 7**, showing the transfer curves of drain current against drain voltage for a number of different gate voltages. Curves from the lowest to the highest represent the drain current against source-drain voltage for each gate voltage from 3V (lowest curve) to 5V (top curve).

Saturation current increases with increasing gate voltage. Flat parts of the curve are more widely spaced for higher gate voltages showing that transconductance increases with increasing source current. The same method can be used to plot the transfer characteristic of different transistor types and certain other devices.

Simulating oscillators

The dc analysis of the astable circuit of **Fig. 8**, netlisted in **Table 4**, gives an insight into one of the pitfalls of simulating oscillators. At the beginning of an analysis, Spice assumes that all nodes are at zero voltage. Then it runs through a series of iterations to establish the actual voltages, with capacitors open-circuited and inductors short circuited.

To the simulator, all resistors of a given value and all transistors of a given type are identical. Consequently, dc analysis of a symmetrical circuit such as Fig. 8 results in symmetrical voltages at the dc operating point,

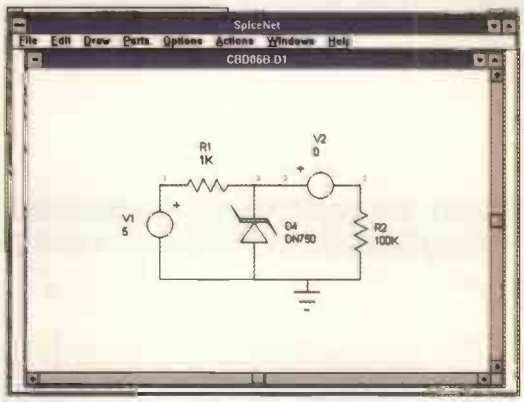

Fig. 3. Load resistor and dummy voltage source, added to stabiliser Fig. 1. Source V2 has zero output, but is included so that the load current can be measured.

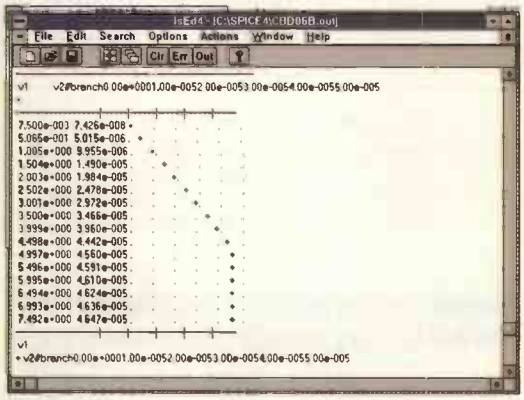

Fig. 4. With a low-value load resistor in circuit, current through the load rises as supply voltage is ramped from 0-7.5V, stabilising between 4.6μA and 4.7μA.

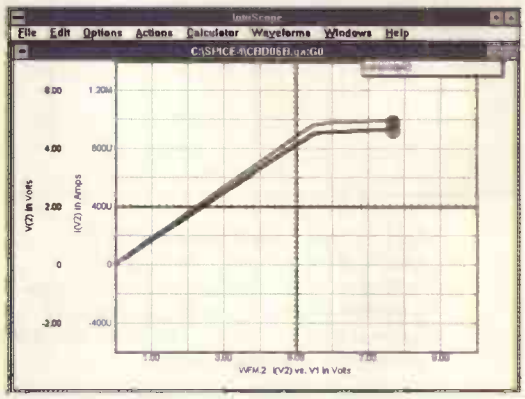

Fig. 5. An Intuscope plot shows how V(2), the output voltage at node 2 (curve 1), and I(V2) the output current through source V2 (curve 2), vary as supply current V1 is swept up from 0-7.5V.

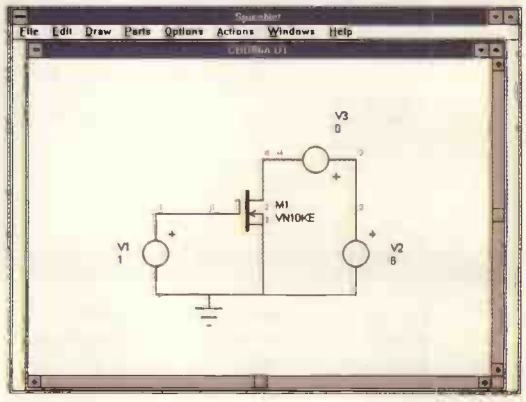

Fig. 6. Circuit for measuring the transfer characteristic of an nmos transistor. Drain-source voltage V2 is swept up from 0-5V at each stage of sweeping the gate-source voltage V1 from 3-5V. V3 measures drain current.

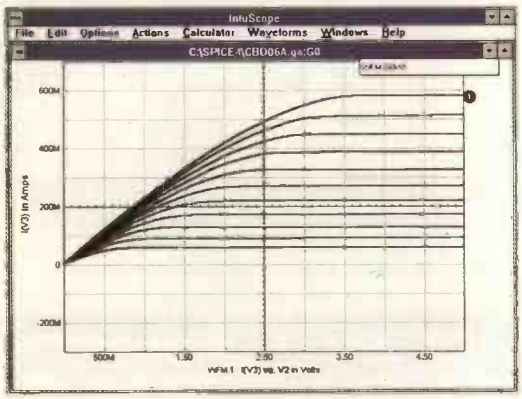

Fig. 7. Plots of the drain current of an nmos transistor as drain-source voltage is swept up from 0V-5V. The family of curves show the transfer function for a series of gate-source voltages from 3V (lowest curve) up to 5V (top curve) in steps of 0.2V.

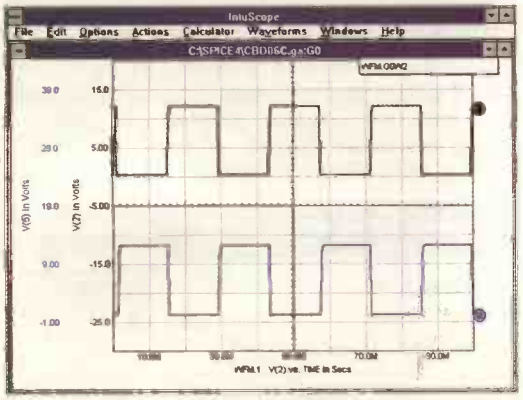

Fig. 9 Outputs (collector voltages) of the astable after it has been stimulated into oscillation by one of the techniques described in the text. After a 1ms settling period, V(2) becomes a square-wave, upper curve. V(5) is in antiphase to V(2), lower curve.

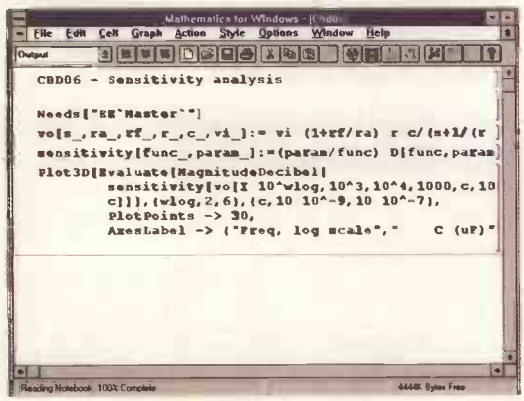

Fig. 10. This Mathematica-based sensitivity analysis of the filter in Fig 11 is adaptable to a wide range of circuits.

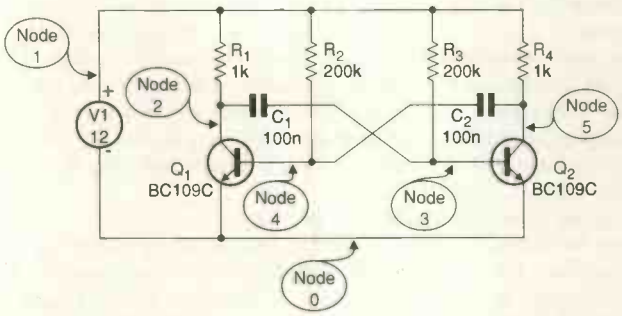

Fig. 8. An astable circuit such as this has a symmetrical operating point in a dc analysis, Table 5.

Table 5. Further iterations produce no further changes in the values, so Spice takes this to be the final solution. Because of manufacturing tolerances, such symmetry does not exist in real life. At power-up, the imbalance of the resistances, capacitances and gains causes a real circuit to take on one of its two possible asymmetrical states, with one transistor on and the other off.

As a dc operating point analysis, these results are acceptable, but problems arise when Spice is asked for a transient analysis. It begins by performing a dc operating point analysis and uses the results of this as a starting point for the transient analysis.

In Table 4, the netlist calls for a listing of the voltages at nodes 2 and 5, for a period of 100ms, sampled at 200µs intervals. Spice first of all carries out the dc operating point analysis, and prints the results as in Table 5, but calling it the Initial Transient Solution. A transient analysis which begins with a stable solution may not be able to get any further. In this example, the printout of the Transient analysis lists both V(2) and V(5) as constant at 1.334727e–01 for the whole 100ms.

Although the astable is an obvious case, it is possible that a similar situation may arise in other types of circuit – especially those with feedback. If an oscillator fails to oscillate or the analysis of another circuit gives unexpected results, the reason many be something of this kind.

Spice has the .NODESET command which sets the voltage at any node to a given value at the beginning of the dc analysis. The aim is to help Spice get started in the right direction by suggesting suitable starting voltages or currents for the circuit. In the astable a sensible set of values might be supplied by adding this line to the netlist,

.NODESET V(1)=12 V(2)=200M V(3)=700m V(4)=–7 V(5)=12

It is not necessary to provide values for every node but the more values provided, the easier Spice will find it to get the analysis working along the correct lines. Also, the more realistic the values supplied, the more quickly will the analysis converge on to the correct output. With the .NODESET command added to the netlist, the Transient analysis gives the expected square-wave output at from both nodes 2 and 5, as shown by *Intuscope* display **Fig. 9**.

Table 4. Netlist of the bjt astable, **Fig. 8**, set up for a transient analysis, with questionable outcome.

```
CBD06C - BJT ASTABLE
*INCLUDE BJTN.LIB
R1      1      2      1K
R2      1      3      200K
R3      1      4      200K
R4      1      5      1K
C1      2      4      100N
C2      5      3      100N
Q1      2      3      0      BC109C
Q2      5      4      0      BC109C
V1      1      0      12
.TRAN   200U   100M
.PRINT  TRAN   V(2)   V(5)
.END
```

Table 5. An astable, Fig. 8, is in a symmetrical but metastable state at its operating point, as this analysis shows. This dc operating point solution is taken as the initial transient solution in a transient analysis.

Node	Voltage
1	1.200000e+001
2	1.334727e–001
3	7.348223e–001
4	7.348223e–001
5	1.334727e–001

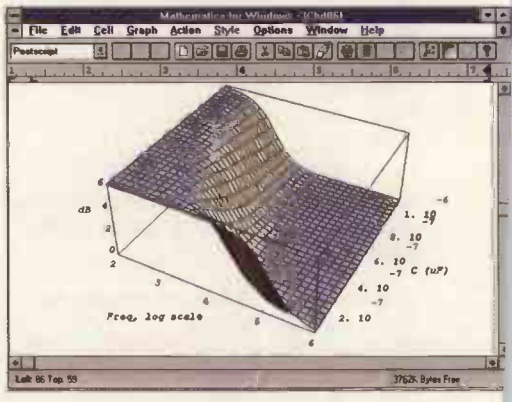

Fig. 12. The 3-D plot shows the sensitivity of the filter to variation in the value of capacitance C in Fig 11. Plotting ranges are easily changed to investigate sensitivity at other frequencies and with larger or smaller capacitances.

An alternative technique that may be used in circuits which contain semiconductors or switches is to specify that the device is to be in the 'off' state at the beginning of the analysis. This is done by adding the command OFF to the statement. For example, in the netlist of the astable, having deleted the .NODESET line, amend the Q1 line to,

Q1 BC109C OFF

The Transient analysis then produces a square-wave output similar to Fig. 9, differing only in detail during the 1ms start-up period.

Another way around the problem, which is more applicable to other types of circuit, is to add a pulse generator to the circuit to 'kick-start' it into action with a single short pulse at time t=0. Having deleted the OFF command, add this line to the netlist,

V2 4 0 PULSE (0 12 0 0 0 1M)

This connects a voltage source between the 0V line and the base of Q1. The source is defined as a pulse generator, with initial output 0V, and pulsed value 12V. The next three parameters define the delay time, rise time and fall time. Delay time is zero so the pulse begins when the analysis starts.

The rise and fall times are given zero value, but a default value TSTEP, the time-step of the analysis, is automatically substituted. The last parameter to be defined is the pulse width and 1ms is a suitable size for this. The PULSE command can also take a final parameter, the period of a repetitively pulsed signal. Omitting this parameter causes a single pulse to be generated. When the analysis is run, the pulse turns Q1 fully on for 1ms after which the astable starts oscillating as before.

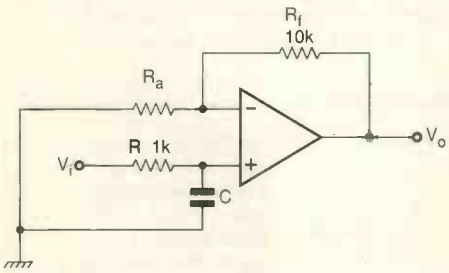

Fig. 11. Low-pass active filter circuit used to demonstrate sensitivity analysis.

Analysing sensitivity

The command '.SENS' followed by the names of output variables causes Spice to print out a list of all circuit parameters – including the parameters of semiconductor models – and to express the sensitivity of each specified output variable in relation to a 1% variation in each parameter. This command is available on the full implementation of *IsSpice*, but is lacking from many Spice-based simulators. The electrical engineering pack associated with *Mathematica* provides a simple and flexible routine for determining sensitivities, **Fig. 10**. After calling for the EE 'Master' routines to be loaded, it defines a function vo, which is the output voltage of the low-pass filter shown in **Fig. 11**. The parameters comprise s, the complex frequency variable, vi, the input voltage, and the values of the filter components shown in Fig 11. The function is defined as,

$$vo = vi \times \frac{(1 + rf/ra)rc}{s + 1/rc}$$

A second function, sensitivity, is defined in terms of a function (func) and a specified parameter (param) of that function. The sensitivity is the first-order differential of the function with respect to the parameter, normalised by multiplying by the parameter and dividing by the value of the function.

The last step in the analysis is to call for a 3-dimensional plot of the sensitivity of vo, in decibels. The notebook has been set up to calculate the sensitivity of *vo* to capacitance over a range of frequencies. In the statement of parameters, *ra*, *rf*, *r*, and *vi* are given particular values, but *c* is left as a symbol. The term $j \times 10^{w\log}$ is substituted for s – except that Mathematica uses *I* for j – with the result shown in **Fig. 12**, overleaf.

On the log frequency scale, numbers correspond to frequencies of 10^nHz. For example '3' on the scale corresponds to 1kHz. It is seen from this graph that the circuit is relatively insensitive to variations in capacitor value when capacitances and frequencies are high.

This routine is easily adaptable to any other circuit for which the transfer function is known in symbolic form – simply substitute the parameters in the square brackets following vo. The sensitivity function is a general-purpose one applicable to all circuits.To obtain the plot, substitute actual values for all except one of the parameters. Figures in the first pair of curly brackets set the frequency range, and those in the second pair set the range of the parameter.

Modelling with spice

Resistors, capacitors, voltage generators and several other component types are specified in a netlist by specifying their connections and value. Components with more complicated behaviour are specified either as subcircuits or as models. A bjt, for example, may be included as a subcircuit consisting of diodes, resistors, a capacitor and voltage-controlled current source.

The subcircuit is filed as one of a library of netlists and is incorporated into a circuit netlist simply by quoting its filename. This is a quick and simple way of modelling 'a transistor'. A sub-circuit is satisfactory for many purposes, but it is obvious that it can not be expected to behave exactly like any particular type of transistor, for example the *BC109C* used in the astable circuit of Fig. 8.

For greater precision, Spice provides algorithms for modelling specified types of component much more accurately. In Table 4, the model *BC109C* is called for, but parameter details are not given. All that is necessary is a reference to the library file in which these details are stored. When the output file is printed following an analysis, the model file is listed in full. In the case of the *BC109C*, this extra line appears in the output file,

.MODEL BC109C NPN (IS=1.02E–14 NF=1.0 BF=845)

The model description gives the model name, followed by its type npn or pnp. Then a number of parameters are listed in brackets. A full Spice model of a bjt specifies 40 parameters, but it is not necessary for the user to assign values to all of these. Each parameter has a default value which is used when an explicit value is not specified.

The *BC109C* model lists 18 parameters of which only the first 3 are shown above. Taking these as examples, IS is the saturation current in amps, NF is the forward emission coefficient and BF is the forward current gain.

Similar Spice models are used for diodes, jfets, mosfets, mesfets, and for high-precision modelling of resistors, capacitors, voltage sources, current sources and switches. Many semiconductor manufacturers publish Spice models for use by designers. Spice models give greater precision but they require more evaluation time than a sub-circuit model. ■

Maximising power transfer in Class-C

Researchers from Ontario challenge a recent statement that maximum power transfer does not occur under conditions of conjugate matching. Dennis Roddy, Oliver Buelow and Rob Williams* present their evidence.

A recent paper by Warren Bruene[1] purported to show that maximum power transfer for a class-C amplifier does not occur under conditions of conjugate matching. This view has been challenged in correspondence between us, Bruene and Jack Belrose†. The following investigation was initiated as a result of this correspondence.

Maximum power transfer theorem and conjugate matching

Maximum power transfer theorem[2] states that the average power transferred from a source to a load will be a maximum when the load impedance is equal to the complex conjugate of the internal impedance of the source, or $Z_L=Z_S^*$. Denoting the source impedance by,

$$Z_S = R_S + jX_S \quad (1)$$

and the load impedance by,

$$Z_L = R_L + jX_L \quad (2)$$

then conjugate matching requires that,

$$X_L = -X_S \quad (3)$$

and,

$$R_L = R_S \quad (4)$$

The first requirement is simply a statement of series resonance maximising current through the load. The second is obtained by equating to zero the differential coefficient of load power with respect to load resistance giving the R_L required for maximum load power.

Maximum power transfer theorem invokes very simple concepts with no question of its validity. However, it does imply that the source can be represented by an independent voltage source in series with a linear impedance, **Fig. 1a)** and Fig. **1b)**. A dual situation can be developed for an independent current source.

An independent voltage source is a source whose emf is independent of the current drawn from it. Linear impedance is an impedance which is independent of the voltage across it or the current through it. This is a common representation of an equivalent voltage source. In certain instances the source or internal impedance can be identified by some physical element within the source, for example the resistance of the electrolyte and electrodes in a battery.

The voltage equivalent generator described to this point is the key to the understanding of conjugate matching applied to amplifiers. However, the problem of establishing any equivalences between the actual circuit and the equivalent source has to be achieved entirely through external measurements.

If the results of terminal measurements can

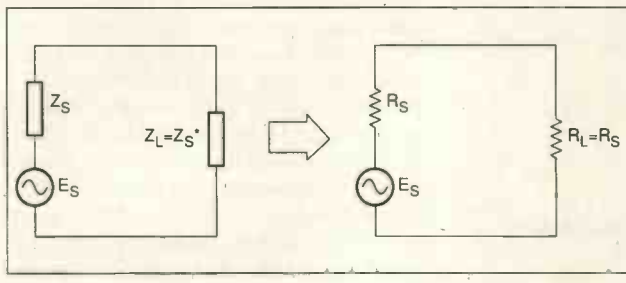

Fig. 1a) Left – source represented by an independent voltage source in series with a linear impedance. b) Right – the same circuit but this time under conjugate matching.

† Belrose, J., (VE2CV), Radio Sciences, Communications Research Centre, Ottawa

*The authors are at Lakehead University, Ontario, Canada.

be manipulated into a form consistent with those expected from the equivalent voltage generator, then the source emf and impedance may be identifiable in terms of operating parameters of the amplifier. This is the approach used here for the class-C amplifier.

Theoretical results for the class-C amplifier

A thorough analysis of vacuum tube class-C amplifiers is given in a book by Heyboer and Zijstra[3]. This work is used as the basis for the following analysis.

The results are sufficiently general to be applied to class-C mosfet amplifiers. Two sets of device characteristics are required – the transfer characteristic, **Fig. 2a)**, and the output characteristics, Fig. **2b)**. For convenience the notation is the same as that used by Heyboer and Zijstra.

These authors derive a number of functions related to the conduction angle shown in Fig. 2a), and to the index k where the transfer function is described by,

$$i_a = c v_s^k \quad v_s > 0 \qquad (5)$$
$$= 0 \quad v_s < 0$$

For mosfets where k=2, the function of interest is given by eq.(3.23) in Heyboer and Zijstra as,

$$f_1(\theta) = \frac{2}{\pi}\frac{\sin\theta - \frac{1}{3}\sin^3\theta - \theta\cos\theta}{(1-\cos\theta)^2} \qquad (6)$$

The expression given for power output, eq.(3.42) in Heyboer and Zijstra is,

$$W_o = \frac{1}{2}\frac{\sigma R_a f_1^2(\theta)}{(1+\sigma R_a f_1(\theta))^2}\sigma V_a^2 \qquad (7)$$

In Heyboer and Zijstra, R_a is used to denote load resistance, V_a is the steady anode or plate voltage, and σ is the slope of the limit characteristic shown in Fig. 2b).

Equation 7 can be rearranged as,

$$W_o = \frac{V_a^2}{2}\frac{R_a}{\left(\frac{1}{\sigma f_1(\theta)} + R_a\right)^2} \qquad (8)$$

By modelling the amplifier shown in Fig. 1b), where R_L is the load resistance corresponding to Ra of Heyboer and Zijstra, power output is,

$$W_o = \frac{E_s^2 R_L}{(R_S + R_L)^2} \qquad (9)$$

Comparing equations 8 and 9 the equivalent source emf is seen to be given by,

$$E_s = \frac{V_a}{\sqrt{2}} \qquad (10)$$

and the equivalent internal resistance by,

$$R_S = \frac{1}{\sigma f_1(\theta)} \qquad (11)$$

Internal elements of the equivalent source are given in terms of constant device parameters. This allows the amplifier to be modelled as an equivalent voltage generator.

Computer simulation

Since the object of the exercise is to find the load resistance which extracts maximum power from the amplifier, the circuit was kept as simple as possible. A single tuned circuit consisting of C, L, and R_L in parallel formed the output load.

Class-C bias was obtained from a separate fixed source with the input signal superimposed on this. The basic circuit is shown in **Fig. 3**. Initially, the simulations were carried out for a number of transistors – a *2N5400* bjt and *IRF510* and *IRF710* mosfets.

Early on, we found that forward biasing of the collector-base junction occurred in the bjt which obscured results. Also the current drive required for the bjt exceeded the capacity of

Power transfer results for two mosfet types in a Class-C amplifier.

Legend: i=subscript ranging from 0 to 5; RL_i=load resistance in Ω.
Simulated, measured, and theoretical values for power in watts are; PμCAP$_i$=*Microcap* simulation results; PpSPICE$_i$=*pSpice* simulation results; Plab$_i$=laboratory measured values; P$_i$=theoretical values.

IRF710

RL_i	PμCAP$_i$	PpSpice$_i$	Plab$_i$
2Ω	0.46W	0.55W	0.13W
3.4Ω	0.65W	0.68W	0.33W
5Ω	0.81W	0.83W	0.5W
10Ω	1.2W	1.06W	0.62W
17Ω	0.97W	0.89W	0.40W
68Ω	0.38W	0.4W	0.09W

θ=60°
σ=0.3S (IRF710),

IRF510

RL_i	PμCAP$_i$	PpSpice$_i$	Plab$_i$
2Ω	2.8W	3.06W	0.5W
3.4Ω	3.25W	3.32W	2.1W
5Ω	3.02W	3.19W	1.9W
10Ω	2.21W	2.28W	1.3W
17Ω	1.65W	1.65W	0.95W
68Ω	0.47W	0.47W	0.41W

θ=60°
σ=0.9S (IRF510)

$$f_1(\theta) = \frac{2}{\pi}\frac{\sin\theta - \frac{1}{3}\sin^3\theta - \theta\cos\theta}{(1-\cos\theta)^2}$$

V_{DD}=7.5V $\quad E_S = \frac{V_{DD}}{\sqrt{2}} \quad R_S = \frac{1}{\sigma f_1} \quad P_i = \frac{E_S^2 RL_i}{(R_S + RL_i)^2}$

R_S=10.4Ω, IRF710
$P_i/(W)$ plots: 0.4, 0.5, 0.6, 0.7, 0.6, 0.3

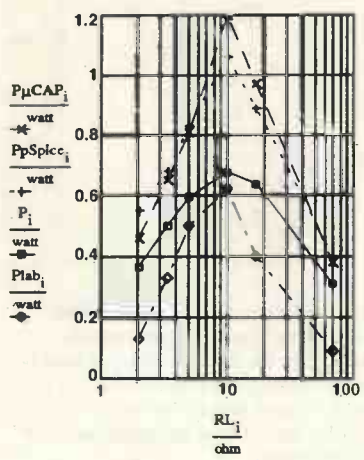

R_S=3.5Ω, IRF510
$P_i/(W)$ plots: 1.9, 2, 2, 1.6, 1.1, 0.4

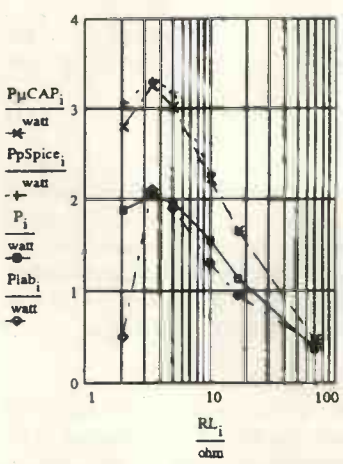

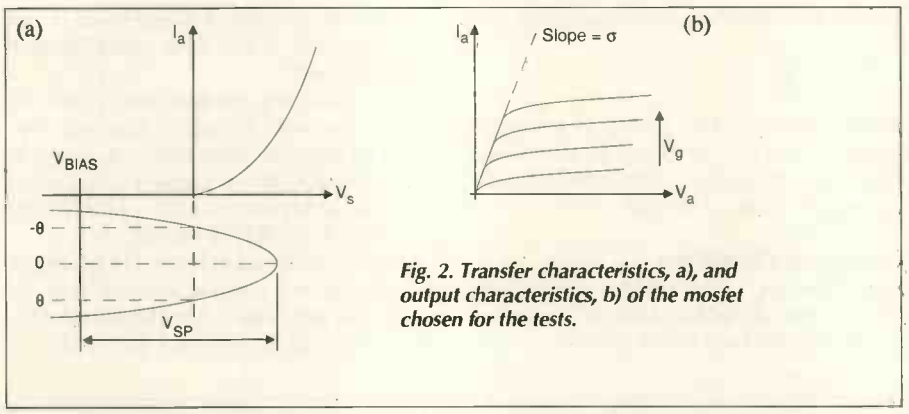

Fig. 2. Transfer characteristics, a), and output characteristics, b) of the mosfet chosen for the tests.

our test equipment. Because of this, relatively low powered mosfets were chosen to suit the test equipment available.

Another consideration was that of keeping the circuit's Q-factor constant. A value of 10 was chosen as being representative of practical values and an operating frequency of 1MHz was used. For high quality coils, dynamic resistance of the circuit is given, to a very close approximation by load resistance R_L. As a result, the expression for Q-factor is,

$$Q = \omega_o C R_L \qquad (12)$$

In the simulations carried out in *Microcap* and *PSpice*, values were chosen to be close to the values used in the practical measurements. These are shown below.

Calculated values for C and L for given R_L values and a fixed Q of 10.

R_L (Ω)	C (nF)	L (nH)
2	795.8	31.83
3.4	468.1	54.11
5	318.3	79.58
10	15.92	159.2
17	93.62	270.6
68	23.41	1,082

Power output was determined from the peak-to-peak voltage across the tuned load using,

$$P_o = \frac{V_{pp}^2}{8R_L} \qquad (13)$$

The limit-line slope was determined from the output characteristics for the two mosfets used. Resistance r_{DD} shown in series with the V_{DD} supply represents the internal resistance of the battery supply. A value of 0.41Ω was estimated for this in the simulations.

Measured results

Circuit Fig. 3 was set up in the laboratory with commercially available values selected to be as close as practicable to the R_L and C values shown in Table 1. Coils were wound to the required inductance. Peak-to-peak voltage across the tuned circuit was measured and the power calculated using equation 13.

For a given mosfet the results show the power curves all peak at about the same value of load resistance. For the *IRF510*, the theoretical value as given by equation 11 is 3.5Ω, and for the *IRF710* it is 10.4Ω.

The simulated curves show the power peaking at the same value of load resistance as the theoretical and measured curves, but reaching considerably higher peaks. This may be a result of inadequate modelling of the effect of the series resistance of the battery source.

Also, the effect of losses in the tuned circuit were ignored assuming that the dynamic impedance of the tuned circuit was much greater than the load resistance connected in parallel.

Accurate determination of the slope σ was not easy as the individual curves peeled off rather gradually from the limit-line. The estimated uncertainty in σ is about ±10%. The results clearly show however that peaking occurs at the predicted values of load resistance. Since the circuit was tuned to resonance for each measurement it can be concluded that the maximum power transfer theorem is valid for the class-C amplifier.

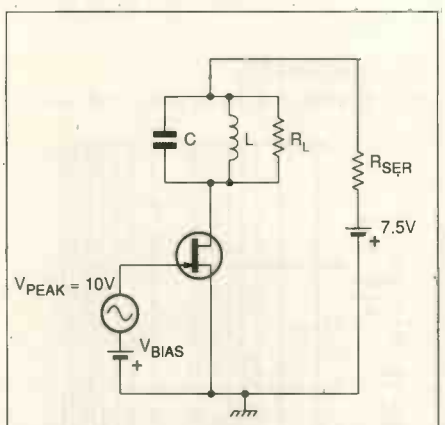

Fig. 3. Simple circuit designed to find load resistance extracting maximum power from the amplifier. Output load is a single tuned circuit comprising C, L and R_L. Class-C bias comes via a separate fixed source superimposed with the input signal.

Finally, note that this investigation was limited to verifying the conjugate matching condition. No attention was paid to limitations imposed by voltage and power ratings of the transistors, or to the difficulties which might be experienced in practice in trying to achieve the necessary matching conditions.

In recent correspondence from colleague James Diggins‡, who has designed class-C amplifiers ranging from 5-10kW, he states that he has never had to include the internal resistance in his sums. The exception was when it affected the Q of the tank circuit, when a guessed value was used.

References

1. Bruene, W., 'RF Power Amplifiers and the Conjugate Match', *QST* pp31-32, Nov 1991.
2. Skilling, H.H., 'Electrical Engineering Circuits'. John Wiley & Sons Inc, 1967.
3. Heyboer, Ir J.P., and Ir. Zijstra, Ir P., 'Transmitting Valves.' Philip's Technical Library. The Netherlands, 1953.

‡ Diggins, J., MBE, is a retired director from Racal Electronics Plc.

DECEMBER 1993
Low cost spectrum analysis
IBM PC on a chip
Electronic power factor correction
The state of state machines

JANUARY 1994

FEBRUARY 1994

MARCH 1994
Designer's guide to SMPS
Polyphase SSB receiver
Class A ultra-low distortion amplifier
Using the Smith chart

APRIL 1994
New wave microwave
Chips for audio noise reduction
Eight bit wireless duplex data link
Test generator for better video links

MAY 1994
Designer's guide to optoelectronics
Ultra-low distortion test oscillator
Working with current mode amplifiers

JUNE 1994
Maintain control with RS232
Designer's guide to selcall
Synchronous alternative to PLLs?
Picking up on wireless LANs

JULY 1994
New look to amplifier design?
Sorting signals from noise
Using Hall to good effect
Precision op-amps: First ever mass review

AUGUST 1994
The data path to multimedia
Applying FPGA
Designing combiners and splitters
Charting Smith's computer world

SEPTEMBER 1994
Circuit design for RMS measurement
Power solutions to supply problems
The ultimate slew rate?s

OCTOBER 1994
Signal processing at microwave frequencies
New circuits for one-chip function generators
The best schematic under Windows?
Feed forward beats feedback audio?

NOVEMBER 1994
Transformerless LCR bridge
Spice-Circuits by design
Superconductor evolution
Magnets for storage and switching

DECEMBER 1994
Communicating underground
Digital sines and cosines
Electrolytic rf detection
Maximising monopole bandwidth
Harmonic effects
Miniature rf link for remote control

JANUARY 1995
Filters for digital audio
Impedance matching
Routeing pcbs via the PC
Buffering for piezoelectric cable output
Advances in a-to-d conversion
Iron out distortion

BACK ISSUES

Back issues of Electronics World are available, priced at £2.50 in the UK and £3.00 elsewhere, which includes postage. Please complete the coupon and send with correct payment to: Electronics World, Quadrant House, The Quadrant, Sutton, Surrey, SM2 5AS.

Note that all issues are subject to availability and please allow 21 days for delivery.

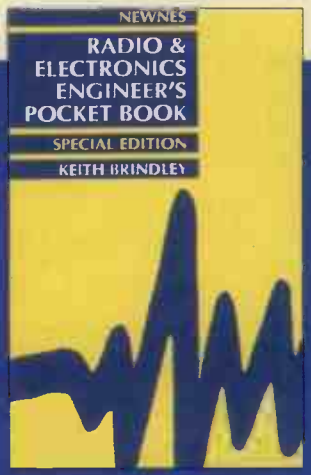

FREE
With every back issue – Engineer's Pocket Book
Worth £4.95

Issue (Month/Year)	Quantity	Price	Total
		Total Order	

Name

Address

Postcode

Telephone

Method of payment (please circle):
Access/Mastercard Visa Cheque PO
Cheques payable to Reed Business Publishing
Credit Card Number
☐☐☐☐ ☐☐☐☐ ☐☐☐☐ ☐☐☐☐

Expiry Date
Signed

INTERFACING WITH C

HOWARD HUTCHINGS

A disk containing all the example listings used in this book is available, Please specify size required

If you have followed our series on the use of the C programming language, then you will recognise its value to the practising engineer.

The book is a storehouse of information that will be of lasting value to anyone involved in the design of filters, A-to-D conversion, convolution, fourier and many other applications, with not a soldering iron in sight.

To complement the published series, Howard Hutchings has written additional chapters on D-to-A and A-to-D conversion, waveform synthesis and audio special effects, including echo and reverberation. An apendix provides a 'getting started' introduction to the running of the many programs scattered throughout the book.

This is a practical guide to real-time programming. The programs having been tested and proved. It is a distillation of the teaching of computer-assisted engineering at Humberside Polytechnic, at which Dr Hutchings is a senior lecturer.

968

Credit card orders accepted by phone. Call 0181 652 3614.

Please supply _____ copies of
INTERFACING WITH C **Price £14.95**
Please supply _____ copies of
Disk containing all the example listings **£15.00**

Remittance enclosed £_____

Interfacing with C can be obtained from Jackie Lowe, Room L333, Quadrant House, The Quadrant, Sutton, Surrey, SM2 5AS

Cheques should be made payable to
Reed Business Publishing Group Ltd

Please debit my credit card as follows:
Access/Master Barclay/Visa Amex Diners

Credit Card No. _____
Exp date
NAME (Please print) _____
ADDRESS _____
_____
_____
_____
POST CODE _____
DATE_____ TELE_____

SIGNATURE

VAT NO._____

If in the UK please allow 28 days for delivery. All prices are correc at time of going to press but may be subject to change.

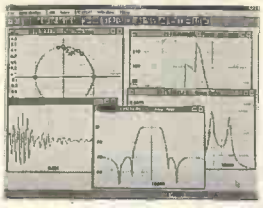

HSPS – Filter Designer

Windows based, designs Analog IIR and Digital IIR/FIR filters. Includes the standard designs plus first and second order parametric filters. Analog filters can be mapped to the digital Domain by a choice of transforms.

Easy filter specification, screen prompts change appropriately for the filter design.

View filter Amplitude, Phase, Transient Response, Group Delay, Pole-Zero Map.

View more than one filter at the same time. Direct manipulation of Poles and Zeros with the mouse. Graphical Interface allows zooming in on response and map detail.

Converts Analog Designs to component values for active filters giving E12 resistor and capacitor combinations.

Converts Digital Designs to Filter Coefficients.

Interfaces directly with **PC-DSP1**, for instantly running digital designs or analog designs mapped to digital domain. IIR filters can be cascaded within one channel. Supports multiple card systems.

****

PC-DSP1 signal processing card

DSP card for PC. Occupies 8 bit ISA slot, link selectable PC I/O address. Software control from **Filter Designer**. Two 16 bit Analog channels. Sample Rates from 5.125 to 48 KHz, including 44.1 and 32 Khz. Uses two 13 MIPs 16 bit DSPs.

****

Benefits

Speed the design process with fast prototyping of analog and digital filters.

Windows graphical interface gives results that are directly usable in documentation.

Investigate and implement non-standard filters by direct placement of poles and zeros.

Interactive interface provides a practical approach to understanding pole-zero maps, their responses and the effects of mapping from analog to digital domain.

****

HSPS Ltd, 53 Mill Road, Over, Cambridge CB4 5PY
Tel/Fax: 01954 230057

CIRCLE NO. 138 ON REPLY CARD

New Mini Camera & Special Offers

New mini waterproof TV camera 40x40x15mm requires 10 to 20 volts at 120mA with composite video output (to feed into a video or a TV with a SCART plug) it has a high resolution of 450 TV lines Vertical and 380 lines horizontal, electronic auto Iris for nearly dark (1 Lux) to bright sunlight operation and a pinhole lens with a 92 degree field of view, it focuses down to a few CM. It is fitted with a 3 wire lead (12v in gnd and video out) ....£93.57+VAT = £109.95 or 10+ £89.32+VAT = £104.95

High quality stepping motor kits (all including stepping motors) 'Comstep' independent control of 2 stepping motors by PC (Via the parallel port) with 2 motors and software .... Kit £67.00 Ready built £99.00

Software support and 4 digital inputs kit £27.00

Power interface 4A kit £36.00

Power interface 8A kit £46.00

Stepper kit 4 (manual control) includes 200 step stepping motor and control circuit £23.00

We are now stocking a range of stepping motors and kits to drive them, please ask for the stepping motor data sheet for full information.

Invertor toroidal transformers 225VA 10.5-0-10.5 primary 0-260-285 secondary £29.95

LEDs 3mm or 5mm red or green .... 7p each Yellow .... 11p each

Cable ties, 1p each, £5.95 per 1000, £49.50 per 10,000

Rechargeable Batteries

AA (HP7) 500mAH £0.99	AA 500mAH with solder tags £1.55
AA 700mAH £1.75	C(HP11) 1.8AH £2.20
C 2AH with solder tags £3.60	D(HP2) 1.2AH £2.60
D 4AH with solder tags £4.95	PP3 8.4V 110mAH £4.95
1/2AA with solder tags £1.55	Sub C with solder tags £2.50
AAA (HP16) 180mAH £1.75	1/3 AA with tags (Philips CTV) £1.95

Standard charger charges 4 AA cells in 5 hours or 4Cs or Ds in 12-14 hours + 1xPP3 (1, 2, 3 or 4 cells may be charged at a time) £5.95

High power charger as above but charges the Cs and Ds in 5 hours. AAs, Cs and Ds must be charged in 2s or 4s £10.95

Nickel Metal Hydryde AA cells high capacity with no memory. If charged at 100ma and discharged at 250ma or less 1100mAH capacity (lower capacity for high discharge rates) £3.75

Special offers, please check for availability.

Stick of 4 42x16mm Nicad batteries 171x16mm dia with red & black leads 4.8v £5.95

5 button cell 6V 280mAh battery with wires (Varta 5x250DK) £2.45

115v AC 80v DC motor 4x22mm shaft 50mm dia x 60 long body (excluding the shaft) it has a replaceable thermal fuse and brushes ....£4.95 each (£3.95 100+)

7 segment common anode led display 12mm £0.45

LM337k TO5 case variable regulator ....£1.95 ....£1.44 100+

GaAs FET low leakage current S8873 ....£12.95 each ....£9.95 10+, £7.95 100+

BS250 P channel mosfet £0.45

BC559 transistor ....£3.95 per 100

BC547A transistor ....20 for £1.00

74LS05 hex invertor ....£10.00 per 100

Used 8748 Microcontroller £3.50

SL952 UHF Limiting amplifier LC 16 surface mounting package with data sheet £1.95

AM27S02 ....£1.25 each (90p 100+)

CD4007UB ....10p 100+ (6p 1000+)

Sinclair light gun terminated with a Jack plug and PP3 clip gives a signal when pointed at 50Hz flickering light with output wave form chart £3.95

DC-DC convertor Reliability model V12P5 12v in 5v 200ma out 300v input to output Isolation with data ....£4.95 each or pack of 10 £39.50

Hour counter used 7 digit 240v AC 50Hz £1.45

QWERTY keyboard 58 key good quality switches new £6.00

Airpax A82903-C large stepping motor 14v 7.5° step 27ohm 68mm dia body 6.3mm shaft ....£8.95 or £200.00 for a box of 30

Polyester capacitors box type 22.5mm lead pitch 0.9uf 250vdc .... 18p each 14p....100+ 9p....1000+

1uf 250vdc .... 20p each 15p....100+ 10p....1000+

1uf 50v bipolar electrolytic axial leads .... 15p each ....7.5p 1000+

0.22uf 250v polyester axial leads .... 15p each ....7.5p 100+

Polypropylene 1uf 400vdc (Wima MKP10) 27.5mm pitch 32x29x17mm case ....75p each ....60p 100+

Philips 123 series solid aluminium axial leads - 33uf 10v & 2.2uf 40v .... 40p each ....25p 100+

Philips 108 series long life 22uf 63v axial .... 30p each ....15p 1000+

Multilayer AVX ceramic capacitors all 5mm pitch 100v 100pf, 150pf, 220pf, 10,000pf (10n) .... 10p each 5p....100+ 3.5p....1000+

500pf compression trimmer 60p

40 of 370vac motor start capacitor (dialectrol type containing no pcbs) ....£5.95 or £49.50 for 10

Solid carbon resistors very low inductance ideal for RF circuits – 27ohm 2W, 68ohm 2W .... 25p each ....15p each 100+

We have a range of 0.25w, 0.5w, 1w and 2w solid carbon resistors, please send SAE for list

P.C. 400W PSU (Intel part 201035-001) with standard motherboard and 5 disk drive connectors, fan and mains inlet/outlet connectors on back and switch on the side (top for tower case) dims 212x149x149mm excluding switch....£26.00 each ....£138.00 for 6

MX180 Digital multimeter 17 ranges 1000vdc 750vac 2Mohm 200mA transistor Hfe 9v and 1.5v battery test £12.95

AMD 27256-3 Eproms ....£2.00 each £1.25 100+

Inmac delux anti-glare static control panal window size 228x161mm, overall size 264mmx200mm held to the monitor with hook & loop tape pads ....£7.95 each

DIP switch 3PC0 12 pin (ERG SDC-3-023) 60p each ....40p 100+

Disk drive boxes for 5.25 disk drive with room for a power supply, light grey plastic, 67x268x247mm ....£7.95 or £49.50 for 10

Hand held ultrasonic remote control £3.95

CV2486 gas relay, 30x10mm dia with 3 wire terminals, will also work as a neon light .... 20p each ....£7.50 per 100

All products advertised are new and unused unless otherwise stated.
Wide range of CMOS TTL 74HC 74F Linear Transistors kits. Rechargeable batteries, capacitors, tools etc always in stock. Please add £1.95 towards p&p. VAT included in all prices.

JPG Electronics, 276-278 Chatsworth Road, Chesterfield S40 2BH
Access/Visa Orders **(01246) 211202 Fax: 550959** Callers welcome

CIRCLE NO. 139 ON REPLY CARD

New Analog & Mixed Mode Simulation

Easy To Use, Full Systems from £450 to £2300
1st Class, Free UK technical support

Professional Level .....

ICAP/4, The Virtual Circuit Design Lab, is a complete circuit design system. It features schematic entry, interactive analog and mixed mode simulation, extensive device libraries, and powerful data processing, all integrated in one easy to use environment. With ICAP/4 you can simulate all types of designs including Power, ASIC, RF, Mixed Mode, Control Systems, and Mixed Technologies

- ***Interactive SPICE 3F based Simulator*** (AC, DC, Transient, Temperature, Noise, Distortion, Fourier, Monte Carlo, and Sensitivity (AC/DC) analyses)
- **Native Mixed Mode - includes 12 state Digital Logic Simulator**
- **Interactive Parameter Sweeping and Measurements**
- **Real Time Cross Probing Directly on the Schematic**
- **Over 6000+ Models Available Including Special RF and Vendor Libraries**
- **Multiple Platform Support -** Windows (32s), Windows NT on the PC, Digital Alpha & MIPS, DOS, Macintosh, and Power PC

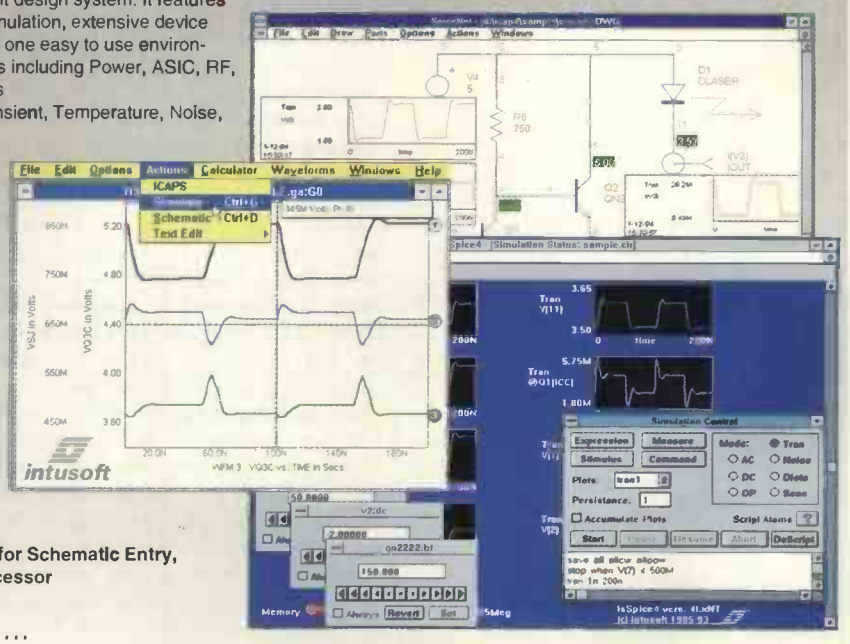

or Entry Level .....

- ***SPICE 3F based simulator*** (AC, DC, Transient, Temperature, Operating point)
- **UNLIMITED CIRCUIT SIZE**
- **Over 500 device models**
- **Separate upgrades available, when you need them, for Schematic Entry, Models Library, Spice Engine & Graphical Post-processor**
- **Windows & Windows NT**

and both with .....

- **Integrated Schematic Entry**
- **High Performance 32-bit Simulator**
- **Real Time Waveform Display**
- **Third Party Support - Works with all popular schematic entry systems**

The Future Is Interactive!

Call or write for free information and eval SW:
Technology Sources Ltd - Falmouth Avenue -
Newmarket - Suffolk CB8 0LZ
Ph: 01638-561460 Fax: 01638-561721

CIRCLE NO. 140 ON REPLY CARD

Reflections Reflections Reflections on opto-electronics

Ian Hickman explains how to get the best out of opto-electronic emitters and detectors.

Opto-electronics has come a long way since the days of vacuum photocells with caesium or silver cathodes. Nowadays semiconductor photodiodes of silicon, gallium phosphide or GaAsP are almost universally employed, except in certain specialised applications, such as photometry, where photomultiplier tubes are often found.

Compared to early light sensitive cells, semiconductor photodiodes are small, inexpensive, stable and easy to use. However, there are a variety of types and a knowledge of their characteristics is needed if they are to be applied successfully.

Solid state photo-sensors

Silicon is the commonest material for photodiodes. It is used in various types covering the spectrum from ultra violet to infra red. Light energy impinging upon the diode creates hole-electron pairs, giving rise to a current. The more light energy, the larger the current, the ratio being a function of the material, and hence independent of the area of the diode.

Figure 1 shows sensitivities of some typical silicon photodiodes to light as a function of wavelength. It is clear that the sensitivity is greatest at longer wavelengths – in the infra red – with maximum sensitivity typically being in the range 0.5-0.6A per watt. At longer wavelengths still, sensitivity falls off rapidly. This is because each individual photon has insufficient energy to create a hole/electron pair in the material.

The formula relating the energy of a photon E to its frequency f, is $E=hf$, where h is Planck's constant. From this it seems evident that once the photon energy was large enough to create hole/electron pairs – i.e. in the infra red – the response should remain constant or even increase with frequency. Energetic, very short wavelength, photons perhaps create more than one hole/electron pair. But in fact, as Fig. 1 shows, the reverse is the case. The reason becomes clear when the detailed operation of a silicon photodiode is considered.

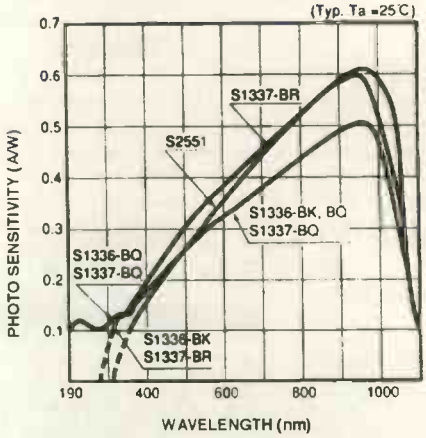

*Fig. 1. Sensitivity of typical silicon photodiodes as a function of wavelength.**

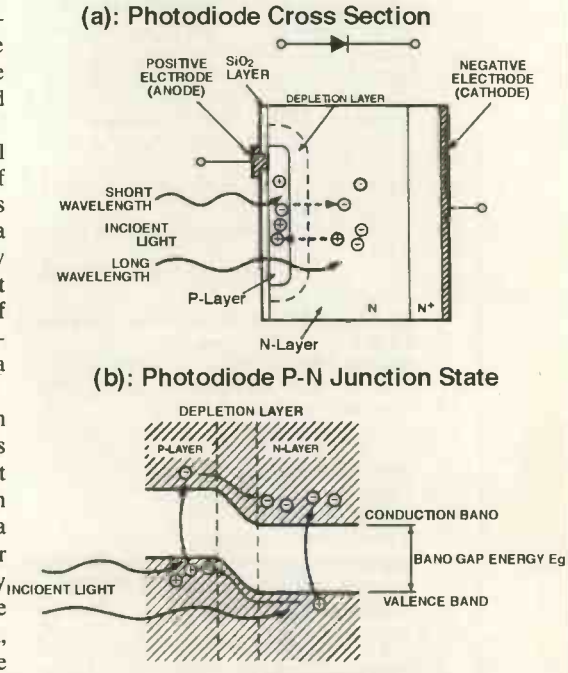

*Fig. 2a). Diagrammatic cross-section of a typical planar diffused silicon photodiode. b) Bandgap diagram for a).**

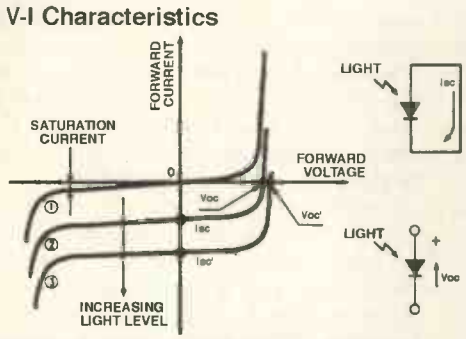

Fig. 3a). How the normal diode characteristic of a photodiode is shifted when light falls upon it.

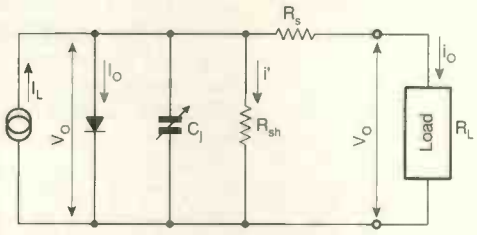

I_L : Current generated by the incident light (proportional to the amount of light)
I_D : Diode current
C_J : Junction capacitance
R_{sh} : Shunt resistance
R_s : Series resistance
i' : Shunt resistance current
V_D : Voltage across the diode
i_O : Output current
V_O : Output voltage

*3b) Photodiode equivalent circuit.**

How silicon photodiodes work

Figure 2a) shows – diagrammatically and not to scale, for clarity – the cross section of a typical planar diffused silicon photodiode. Incident light creates hole/electron pairs.

Under the influence of the potential barrier represented by the depletion layer, electrons liberated in the P layer migrate to the N layer while holes created in the N layer move in the opposite direction, Fig. 2b). This creates a current which flows through the external circuit if the diode is short-circuited, or notionally through the diode itself. If the diode is open-circuited, this establishes a voltage across it, **Fig. 3a)**. Thus the diode can be represented by the equivalent circuit of Fig. 3b).

When load resistance R_L is open circuit, the illumination causes a voltage across the diode. As with any diode this is logarithmically related to current, and shows a temperature coefficient of about –2mV/°C. Consequently, open-circuit operation is unsuitable for light intensity measurements.

By contrast, in the short-circuit case, the current I_L, is extremely linearly related to the incident light energy. This current all flows in the external circuit if the resistance of the 'short' is negligible compared to the diode series resistance R_s. When I_L is in the range 10^{-12} to 10^{-3}, the achievable range of linearity is greater than eight orders of magnitude, depending on the type of photodiode and its operating circuit. It is limited at the bottom end by noise.

The above description applies to a basic planar diffused silicon photodiode, but many variations of this basic type are possible. These include low junction-capacitance types, and PIN photodiodes for high speed response, operated with a reverse bias of up to 100V depending upon type.

Another high-speed type is the silicon avalanche photodiode, also operated with a reverse bias voltage. The avalanche multiplication effect provides internal gain in the diode itself, making it a sort of solid state analogy of a photomultiplier tube. The high value of I_L due to the internal gain – up to ×100 – enables the diode to be used in a **Fig. 4a)** type circuit, with a much lower value of R_L compared to a normal photodiode.

Small-area silicon avalanche diodes, operated with R_L=50Ω, can achieve a cut-off frequency in excess of 1GHz, due to their low junction capacitance of around 2pF. Other types include Schottky junction photodiodes fabricated in GaP or GaAsP, offering high sensitivity well into the ultra-violet region.

Returning to the variation of sensitivity with wavelength, Fig. 2a) indicates that longer wavelength radiation penetrates further into the material than shorter wavelength radiation, due to absorption. The shorter the wavelength, the greater the degree of absorption of light within the surface diffusion layer, leading to reduced sensitivity, since most photons do not reach the depletion layer. In silicon photodiodes with enhanced ultra-violet sensitivity, therefore, the surface diffusion layer is made very thin. As a result, the depletion layer is very close to the surface.

Using silicon photodiodes

Figures 4a) and **b)** show two ways of operating silicon photodiodes in the current measuring mode, i.e. with and without reverse bias. In Fig. 4a), reverse bias results in fast response to light pulses, making the arrangement attractive for high speed data links.

On the down side, linearity is poorer, noise

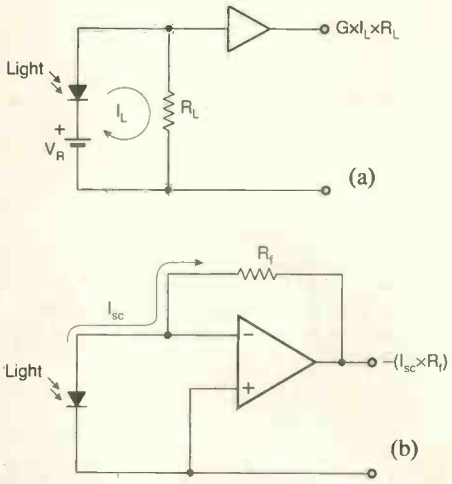

*(Above) Fig. 4a). Circuit for photodiode operation with reverse bias. b) Circuit for operation where R_L is short circuit.**

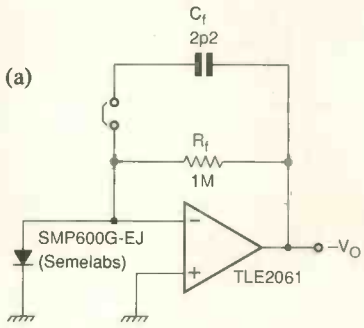

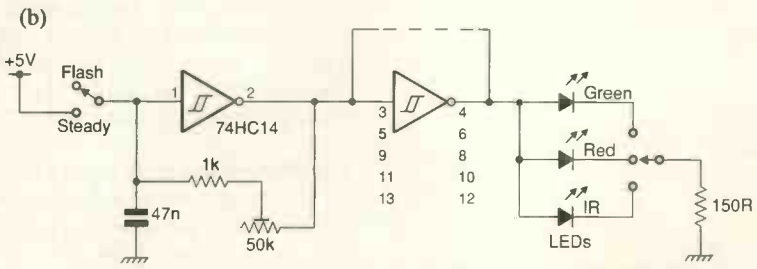

Fig.5a). Experimental photodiode circuit. b) Square wave flashing light circuit used to illuminate the photodiode.

Fig. 6a). Output of the op-amp when the photodiode is receiving square wave on/off modulated light, Cf not in circuit. b) As a), but Cf in circuit.

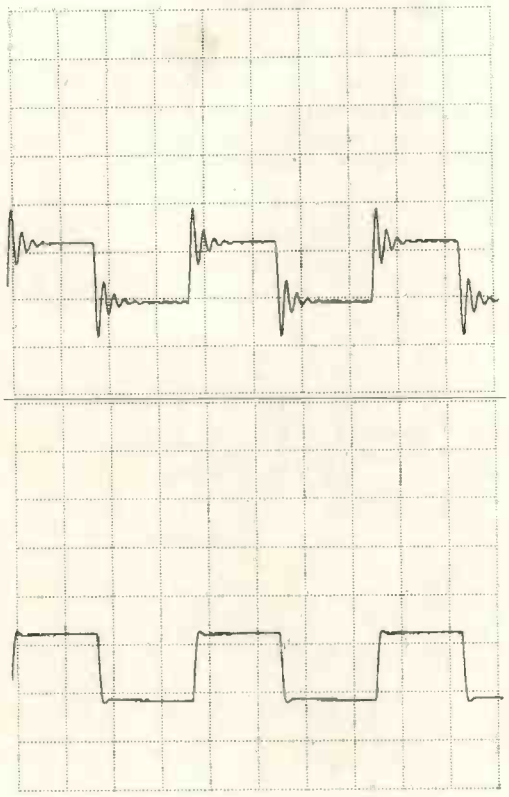

Fig. 7a). Output of the TLE2161 when the photodiode is receiving square wave on/off modulated light, Cf not in circuit. b) as a), but Cf (reduced to 0.9pF) in circuit.

greater and leakage via R_{sh}, Fig. 3a), results in a dark current in the absence of illumination, although R_{sh} is typically in the giga-ohm range. The arrangement of Fig. 4b) requires no bias source, and is very common. The high gain of the op-amp ensures a near perfect virtual earth, resulting in no voltage appearing across the diode and hence no dark current. However, the op-amp's bias current at the inverting input has to be supplied via R_f. As a result, if R_f is made large in order to secure high gain and high sensitivity, then an op-amp with very low input bias current is necessary.

Sensitivity of silicon photodiodes, illustrated in Fig. 1, is the steady state or dc response. It varies as a function of the wavelength of the light as shown. However, the ac response, when the intensity of the light varies at some frequency or other, is a little more complex. This is due to a characteristic of silicon already mentioned.

The transit time of carriers liberated within the depletion layer is determined by the potential gradient therein. In turn, the gradient is set by the voltage across the layer. This may be just the band gap voltage in a Fig. 4b) type circuit, or an externally applied bias as in Fig. 4a). But carriers liberated outside the depletion region are not subject to this potential gradient and hence take much longer to diffuse to the anode, or to the cathode as the case may be.

Response is slower at infra-red

As Fig. 2a) illustrates, longer wavelength radiation penetrates more deeply into the silicon. As a result, energy in the infra-red may release carriers in the bulk of the N material, having passed right through the depletion layer before creating hole/electron pairs. Thus when infra-red illumination first strikes the diode, current due to carriers liberated in the bulk region appears at the terminals later than the component of current due to carriers liberated in the depletion region. At shorter wavelengths, where the luminous energy does not penetrate so deeply, this effect is much reduced or even absent entirely.

Response speed of a photodiode, expressed as the rise time t_r is determined by three factors. Time t_r is related to cut-off frequency f_c by the approximate relationship t_r=0.35/f_c. The first of the three factors is the time constant formed by the diode terminal capacitance C_t – including the junction and package capacitance and any circuit strays – and load resistance R_L. The second is the transit time of carriers released in the depletion region, and the third is the diffusion time of carriers released outside the depletion layer, which as noted above move much more slowly.

Experimenting with opto-electronics

To investigate some of the above effects in a practical way, I carried out some experiments using a Semelab silicon photodiode type *SMP600G-EJ*. This 4-by-4mm square silicon die has an effective area of 14.74mm^2, a responsivity at 900nm of 0.55A/W and a capacitance at 0V reverse bias of 190pF.

The device is mounted in a two lead TO39 package with a standard glass window. I connected it in a Fig. 4b) type circuit. The actual arrangement is shown in **Fig. 5a)**, using a TI internally-compensated *TLE2061* op-amp.

In a photographic darkroom, the photodiode was illuminated by a light source modulated at about 1.2kHz, which is shown in Fig. **5b)**. For this purpose, the red led – a 3000mcd high brightness type – is used.

Comparing Fig. 4b) and 5a), the latter has provision for a capacitor C_f in parallel with the feedback resistor R_f. **Figure 6a)** shows the output of the op-amp when the photodiode is illuminated by the led, at a suitable level. Capacitance Cf is not in circuit and severe ringing is evident.

One advantage of the circuit Fig. 4b) is that, as the photodiode is connected to a virtual earth, R_L is zero. The first factor limiting the speed of photodiode response mentioned earlier – the time constant C_tR_L – is apparently eliminated. Thus the speed of response should be limited only by the other two factors. But while the large gain of the op-amp at 0Hz ensures an ideal virtual earth in the steady state, as the frequency increases, the gain of the op-amp falls. As a result, a finite drive voltage is now required at its inverting input.

The op-amp's gain typically falls at 6dB/octave beyond 10Hz, for example in an internally compensated op-amp with a single dominant pole. This is associated with a 90° phase lag. The passive *CR* circuit comprising R_f and C_t contributes another –6dB/octave roll-off and 90° phase lag at frequencies well beyond its –3dB corner frequency. If this occurs well below the op-amp's unity gain frequency – as it usually does – then at the frequency where the op-amp gain equals the attenuation through the *CR* feedback circuit, the loop gain is unity and the phase shift perilously close to 180°. The circuit therefore exhibits a gain peak at this frequency, and the fast edges of the square wave illumination excite this and cause the ringing observed.

Adding C_f provides a phase advance, reducing the loop phase shift and avoiding the ringing, Fig. **6b)**. The appropriate value for the circuit of 5a) was found by experiment to be 2.2pF, the rise time being about 40μs. In this case, the response speed is limited by the characteristics of the op-amp, not by the transit time of carriers released in the depletion region. Substituting a faster one naturally improves matters.

Figures 7a) and **b)** show performance with the same light source and photodiode, but with a decompensated version of the op-amp, a *TLE2161*, substituted for the *TLE2061*. Faster response is illustrated by the much higher frequency ringing in Fig. 7a), where C_f=0pF, and by the reduced rise time of about 11μs in b), where C_f is 0.9pF, i.e. two 1.8pF capacitors in series.

Figures 8a) and **b)** show the effect, mentioned earlier, of carriers released outside the

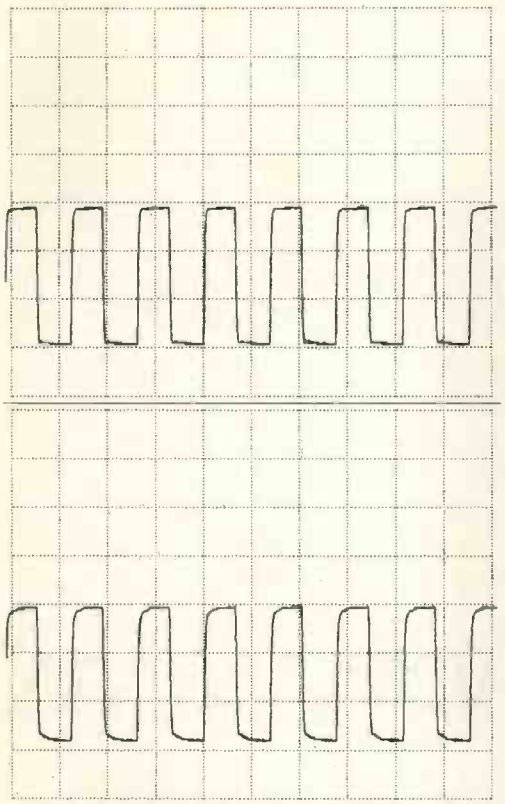

Fig. 8a) Output of the the circuit of Figure 5 a) (using the TLE2061) when illuminated by light from a green led (3mm ultra-bright green, 590-345). b) As a) but receiving light from an infra red led, T.I. GaAlAs IR diode TIL901. Note the delayed contribution from carriers released in the bulk material, outside the depletion region.

depletion region by long wavelength radiation, which penetrates further into the material. In a), the illumination was from chopped light from an 'ultra-bright' 590-345 green led, and the edges of the waveform are square.

In b), the illumination was from an infra-red emitting GaAlAs diode type *TIL901*. The majority of the response is due to carriers released in the depletion region, and hence is as prompt as in a). But the output then rises – or falls – further, due to the much slower diffusion of those carriers released outside the depletion region.

When using silicon photodiodes, the amplifier will often be the limiting factor as far as frequency response goes. The exception is when using a photodiode – especially a low capacitance type – in a Fig. 4a) type circuit with a low load resistance. This allows a wide-band rf amplifier to be used in place of an op-amp. However, the low value of load resistance implies a relatively low sensitivity, so when detection of very low light levels is desired, a Fig. 4b) type circuit is used.

Since designers often demand both high sensitivity and wide bandwidth, any method of extending the bandwidth of Fig. 4b) is welcome. In this circuit, as the frequency rises, the op-amp gain falls, thus requiring a larger drive voltage at its inverting input – the virtual earth fails.

Extending bandwidth

Instead of adding capacitor C_f to prevent ringing, one could in principle extend bandwidth by simply adding a negative capacitance[1] of $-C_t$ in parallel with the photodiode. I tried this using the circuit of **Fig. 9a)**, and it works.

The snag though is that the op-amp used to provide the negative capacitance A_2 needs to have a considerably greater bandwidth than the original amplifier A_1. So if you have such an op-amp, it is simpler to use it at A_1 in the first place and forget about negative capacitance. There is however a practical way to increase bandwidth – by about a factor of ×3.

This is shown Fig. **9b)**, applied to an integrated photodiode/op-amp encapsulated in clear plastic, Burr-Brown type *OPT211*. Driving the anode of the photodiode reduces the effect of its capacitance upon circuit bandwidth. With R_f at 1MΩ and C_f at 1pF, a bandwidth of 150kHz is achieved.

Note that C_f includes the self capacitance of resistor R_f – a separate component may not in fact be necessary. Buffer bias current is supplied via R_f, and so should be negligible if a dark offset voltage is not acceptable. The P-channel buffer shown meets this requirement, while also ensuring that the anode of the diode is at ground voltage or below.

The buffer bandwidth should be at least 4MHz. The two alternative buffers shown both have disadvantages, which may not be important depending on the application. The Darlington buffer bias current will result in a dark voltage offset, while the op-amp buffer's noise may degrade the overall noise performance slightly.

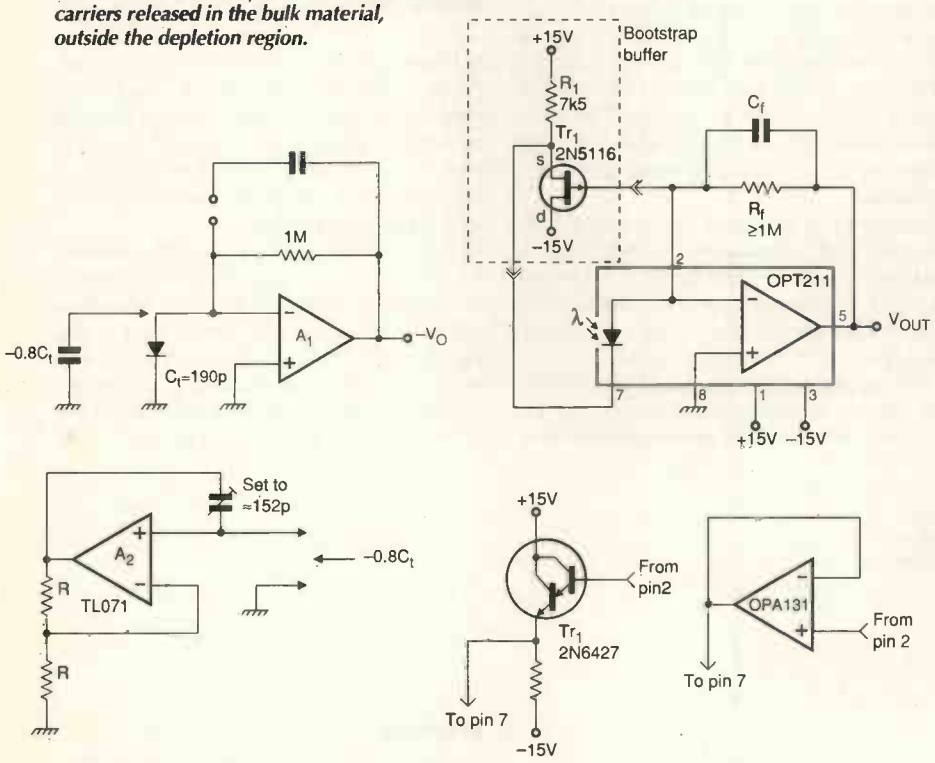

Fig. 9.a) Increasing the bandwidth by connecting negative capacitance in parallel with the photodiode. b) Increasing the bandwidth by bootstrapping, applied to an OPT211 integrated photodiode/op-amp type.†

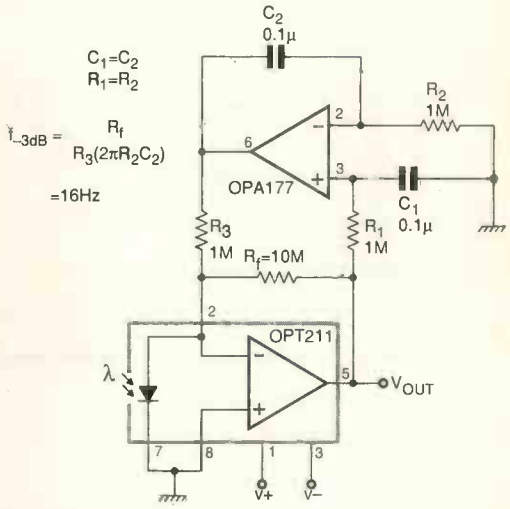

Fig. 10. Circuit to reject ambient light while providing high sensitivity to wanted signals.†

Optical links for data

Photodiodes are often used as part an optical signalling link, handling digital data such as the channel selection information of a tv remote-control handset. Here, only the variations of incident light – the data – are of interest.

Steady ambient light produces a photodiode output which must be ignored – even if its

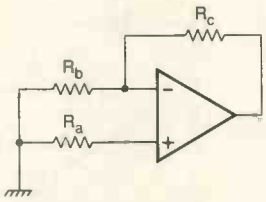

Total noise referred to input = e_t

$$e_t = \sqrt{e_n^2 + e_r^2 + (i_n R_{EQ})^2}$$

where e_n, i_n = voltage, current noise as per datasheet

e_r = resistor noise

$= (4kTR_{EQ})^{1/2} = 0.13\sqrt{R_{EQ}}$ nV/ Hz at 25°C

$R_{EQ} = R_a + R_b R_c/(R_b + R_c)$

Fig. 11. Noise calculations for an op-amp circuit.

level should change. Simple ac coupling of the photodiode op-amp output may suffice. If need be, a sufficiently high l.f. cutoff can be added to suppress 100Hz ripple due to artificial lighting. But with a high sensitivity system, where R_f is large, bright ambient light may saturate the op-amp's output.

The circuit of **Fig. 10** can reject very bright ambient light, yet provide high ac gain for best signal to noise ratio. This is possible because of the very large linear range of a silicon photodiode. The auxiliary op-amp keeps the *OPT211*'s mean output voltage at zero and would thus compensate not only for bright ambient light, but also for the offset due to the base current of a Darlington buffer in Fig. 9b).

Using a silicon photodiode in a Fig. 4b) type circuit, connected to a low noise high gain op-amp it is possible to set up optical data links. Ambient light rejection can be added if necessary, as per Fig. 10.

Such links are subject, of course, to line of sight ranges. On a long link, the received signal will be small, so the range is limited by the circuit noise of the op-amp. Total circuit noise is the sum of contributions from the op-amp's voltage noise and its current noise – both quoted in the manufacturer's data sheets – and the resistor noise originating in resistors in the input circuit, **Fig. 11**.

In the case of a Fig. 4b) type circuit, R_a is zero, R_c is R_f and R_b is the photodiode's shunt resistance R_{sh}, which is usually very much greater than R_f. Given these resistance values, and the data sheet figures for the op-amp's voltage and current noise, the total noise e_t referred to the input can be calculated from the formula in Fig. 11.

An experiment was carried out to estimate the range that could be expected for a data link of very modest data rate, using the circuit of **Fig. 12a)**. In the interests of high sensitivity, feedback resistor R_f has been raised to about 100MΩ.

The necessary C_f was too small to use a discrete component, so two short pieces of insulated wire were soldered to the ends of R_f, which was actually two 47MΩ resistors in series. These wires were twisted as necessary to just suppress ringing.

Clearly, the range was greater than could be accommodated in my back garden, so I measured the range for a convenient sized output, monitoring the output of A_1 rather than A_2. Using the 3000mcd red led, this turned out to be almost exactly two metres, the output from A_1 being shown in Fig. **12b)**.

The oscilloscope probe was then transferred to the output of A_2 and the led aimed off, so as to provide the same amplitude signal, simulating a 40dB increase in path loss. As Fig. **12c)** shows, the signal was still just usable, being adequately above the noise level.

Optical-path loss follows an inverse square law, i.e. increasing by 6dB for every doubling of the range. 40dB corresponds to 10 000:1 in power, and thus to 100:1 in range. This gives an estimated range of 200m when using the output of A_2 with the transmitting led properly aligned.

Frequency of the square wave signal is a little under 2kHz – it was meant to be 2.4kHz – and can be taken as representing 'revs' (reversals), or a continuous pattern of alternate 0s and 1s. Thus the link would support NRZ signalling at, say 4.8kb/s, as it stands.

This range could be extended by some simple optics. A 50mm diameter lens at the receiving end would gather one hundred times as much light energy as the photodiode alone, giving a ten times increase in range when properly aligned. A similar increase could be obtained by a lens at the transmitter to reduce the 15° beam width of the 3000mcd red led, at the expense of yet more critical alignment when setting up the link.

With 15mcd types now available, another factor of two on the range is possible, giving a theoretical factor of 200 increase in range, to 40km. This is more than one is likely to use. Range can be traded for bandwidth by reducing R_f, permitting a higher data rate at a more practical range, e.g. for a cordless optical link between a computer and laser printer. ■

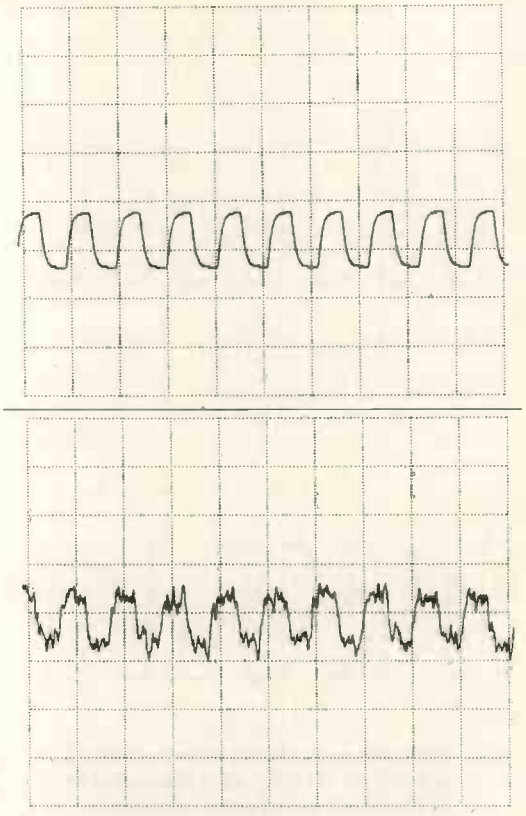

12b) Output of A_1 at a range of 2m from 3000mcd red led. c) simulated output of A_2 at a range of 200m.

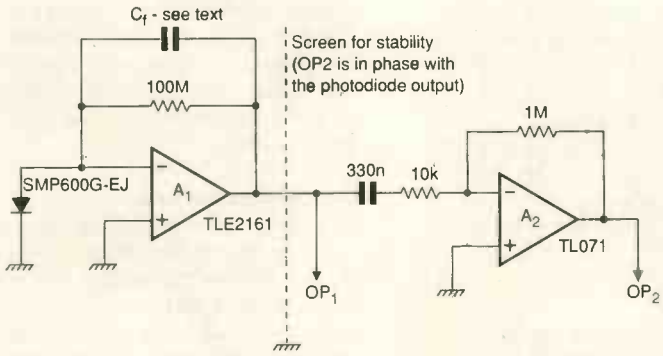

Fig. 12a) Receiving end of a long range optical data link.

Reference

1. 'Negative approach to positive thinking', Ian Hickman, *EW+WW*, Mar'93 pp 258-261.

†Pictures courtesy Burr-Brown Corporation.
**Pictures courtesy Hamamatsu Photonics UK Ltd.*

Allen Brown looks at a piece of software designed to help teach and learn engineering mathematics.

Mathplus or minus?

Mathematical software packages are an essential tool for aiding design and performing modelling or simulation processes. Since the teaching and learning of maths can be an arduous process, such packages can be of enormous benefit to students *and* engineers. One such package is *Mathplus*, from Waterloo Maple of Canada.

Based on the *Maple* kernel – reviewed in the May 1995 issue, p379 – *MathPlus* is able to perform symbolic and numerical operations. Versions are available for the pc, running under Windows, and Mac.

MathPlus differs from packages such as *MathCAD* in that it is primarily a teaching aid. When performing an integration in *MathCAD* for example, the user merely expresses the integral, clicks on 'evaluate' and there's the symbolic result. In *MathPlus* the user is expected to provide the necessary substitutions in the intervening steps, **Fig. 1**.

It is possible to manipulate equations, perform substitutions, expand expressions, and carry out a variety of other functions. In addition there is a wealth of graphing options including three-dimensional plotting and animation, which is very easy to set up.

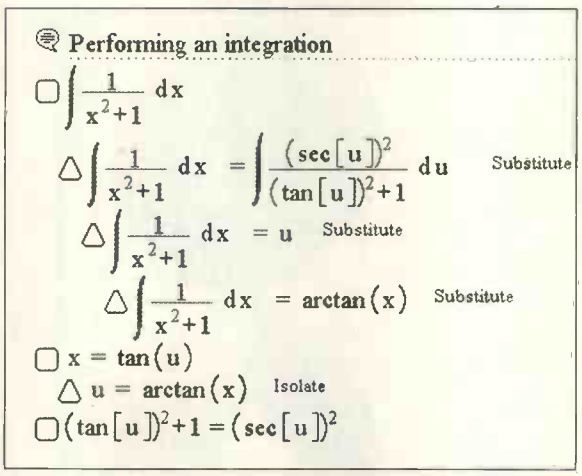

Fig. 1. MathPlus *allows you to manipulate equations and perform substitutions in a similar way to that normally performed in long-hand. However the software stops you from making mistakes.*

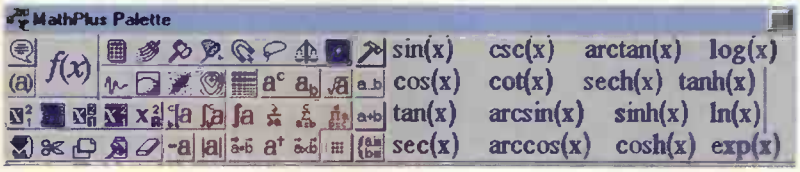

Fig. 2. Features of the package can be accessed via mouse activated icons on the Function Palette.

User access via palettes

To help the user to access the many features of *MathPlus* there are two palettes. **Figure 2** shows a typical palette incorporating a number of functions. One obvious icon which is absent is the derivative d/dt. Each time it is required, the user has to type it in – including the sets of brackets.

There is a D operator which, according to the manual, does the same task, but as far as I can see, it seems quite useless. The palette does have a partial derivative, but its use, as illustrated in the examples provided, is unconventional. Partial derivatives are not the same as whole derivatives and should not be treated as such.

One useful feature is the option for rearranging equations. Given an equation you can make any variable appearing in it as the object, provided it does not appear more than once. **Figure 3** shows an example of making *x* the subject using the isolate option.

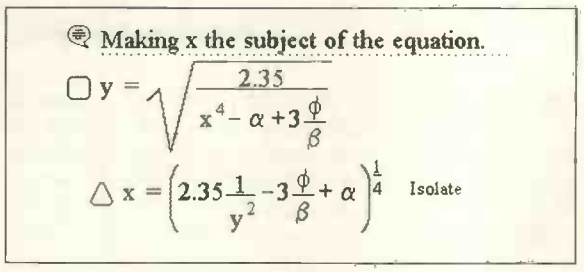

Fig. 3. Equation manipulation is very easy, but it only works provided the variable you want to isolate only appears once.

Once a function has been defined it is possible to generate a table or a graph of the function. This table can be stored on disk for future processing. In fact there are several algebraic manipulation operations available – typically the operations that you would use when applying algebraic operations on paper. The difference is that *MathPlus* tells you when you go wrong or attempt to make a mistake.

Plotting in three dimensions

Graphics options on *MathPlus* are impressive and easy to use. Once a function has been defined it is highlighted. When the graphics icon in the palette is clicked, the plot appears instantly.

Several traces can be added to the same graph. Each graph has a number of icons that allow the user to change the settings – axis, scales and zoom. *MathPlus* allows you to visu-

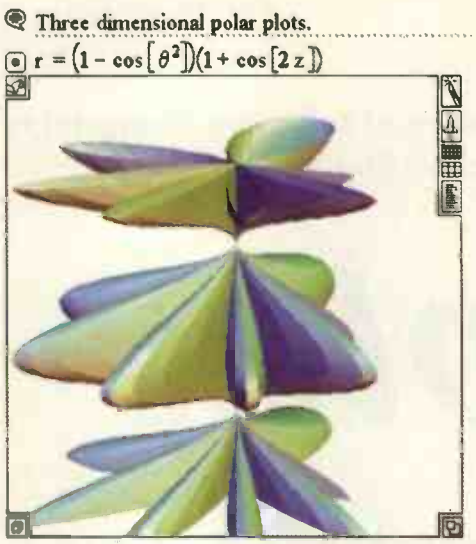

Fig. 4. Three dimensional plotting is achieved with relative ease. Creating 3D polar plots would have been a major task only a few years ago, but with MathPlus *a few mouse clicks and there it is.*

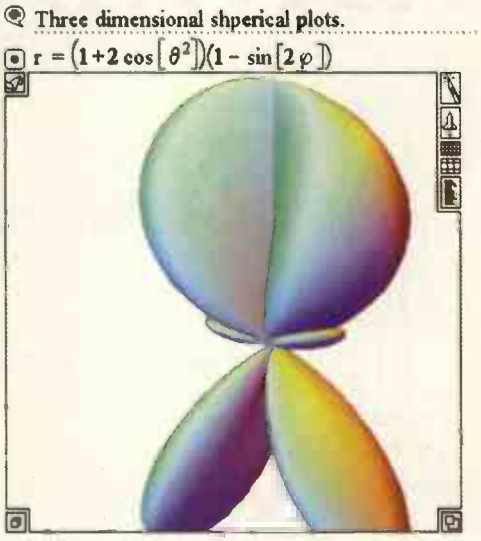

Fig. 5. Spherical plots are created with ease, and you are able to rotate in any direction to gain a different perspective. A number of shading schemes are also available for enhancing the three dimensional figure.

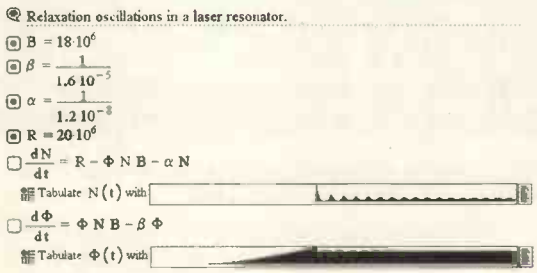

Fig. 6. Solving non-linear differential equations is also possible. This is an example of a relaxation oscillation in a laser resonator.

alise three dimensional polar plots very easily. **Figure 4** shows an example. Although the equation given above the plot is simple enough, you need a pretty vivid imagination to visualise. Even spherical co-ordinate plots, once the domain of quantum mechanics, can easily be generated as in **Fig. 5** – it may even become a joy visualising Fermi energy surfaces in solid state devices.

Solving differential equations

Another interesting feature of *MathPlus* is its ability to solve differential equations, either numerically or symbolically. But I should stress that the symbolic method is by no means as clean as you would wish. Using partial differentials for expressions that contain only two variables is not a practice to be encouraged.

Numerical integration options are far more convincing. You have a choice of two integration algorithms – the fourth order Runge Kutta or the Euler. The Euler algorithm does not achieve the same degree of accuracy but is much faster in execution.

If you attempt to solve a system of simultaneous differential equations with cross coupling non-linear terms, they can be solved without having to convert them in to difference equations. An example of this in operation is shown in **Fig. 6**, which illustrates the relaxation oscillations in a laser resonator.

Other features

MathPlus also has provisions for matrix manipulation, solving sets of simultaneous equations, finding Eigenvalues, dealing with Bessel functions and generating series. This includes Taylor and summation series for solving differential equations.

Wildcard variables can be used for generating certain types of polynomial series. *MathPlus* uses a scheme of notebooks in which the user can enter both equations and graphs. These can be customised.

To help the newcomers there is a number of preconstructed notebooks supplied with predesigned palettes for specific applications. For example there is a notebook for easing the task of performing Laplace transforms. Each notebook contains helpful notes for the application in hand. I can foresee third parties producing notebooks for a variety of teaching and learning applications.

To help new users to become acquainted with the package, two manuals are supplied – the Learning Guide and Reference Manual. The Learning Guide provides numerous examples aimed at helping new users gain confidence in using the package. The help menu is a standard Windows format – adequate for most queries.

Summary

If you are looking for a software package for teaching or learning mathematics then *MathPlus* will not disappoint. The learning curve needed is gentle, although to use the product efficiently you have to remember a number of quirky features and key strokes – use of the escape key for example.

MathPlus will certainly find favour among first year students, whose exposure to maths teaching has not been appropriate for an engineering degree course. It will not only be first year students that benefit from *MathPlus* but also candidates sitting both A level maths and physics.

The package should also appeal to engineers who – for whatever reason – need to brush up their maths with a minimum of effort. ■

System requirements

A realistic minimum is,
386 pc with maths coprocessor
4Mbyte of ram
10Mbyte of disk storage
Mouse
Colour VGA monitor

Availability

MathPlus is available form Robinson Marshall Europe plc at a single user price of £199 exclusive of VAT and UK postage £5.99. This includes free unlimited technical support. There is a secondary school unlimited site licence at £995.
Nadella Building
Progress Close
Leofric Business Park
Coventry CV3 2TF
tel 01203 233216, fax 233210.

M & B RADIO (LEEDS)

THE NORTH'S LEADING USED TEST EQUIPMENT DEALER

OSCILLOSCOPES

TEKTRONIX 475 200 MHz dual trace £495
TEKTRONIX 434 25 MHz dual trace storage £400
TEKTRONIX SC504/TM504/DM501 80 MHz Oscilloscope/ multimeter £450
TEKTRONIX 7000 series oscilloscopes in stock please phone for prices & details
TEKTRONIX 5113 dual beam storage mainframe (new) £275
TEKTRONIX T922R 15 MHz rack mount oscilloscope £150
TEKTRONIX 212 500 KHz miniscope £150
TEKTRONIX 326 25 MHZ miniscope £275
BALLANTINE 1022B 25 MHz miniscope £225
HP 1743A 100 MHz delta measurements £500
HP 1715A 200 MHz with dvm £450
HP 1703A storage oscilloscope £295
PHILIPS 3311 60 MHz digital storage 125 MHz clock £700
PHILIPS 3262 100 MHz dual trace £400
PHILIPS 3055 50 MHz dual trace £400
PHILIPS 3217 50 MHz dual trace £375
PHILIPS 3244 50 MHz 4 channel oscilloscope £400
IWATSU SS6122 100 MHz 4 channel with cursors £800
IWATSU SS5710 60 MHz 4 channel £400
LEADER LB0524L 40 MHz dual trace delayed t/b £300
GOULD 4035 20 MHz digital storage IEEE £550
GOULD 1420 20 MHz digital storage £400
GOULD OS4000 10 MHz digital storage £200
GOULD OS250B 15 MHz dual trace £120

SPECTRUM ANALYSERS

TEKTRONIX 492 21 GHz spectrum analyser £5500
TEKTRONIX 7L12 10 KHz-1.8 GHz + mainframe £2000
HP140T/8552B/8553B 1 KHz-110 MHz spectrum analyser £450
HP141T/8552B/8554B 100 KHz-1250 MHz + (8553B) £1000
HP140T/8552A/8555B 10 MHz-18 GHz + (8553B) £1700
HP8410/8414A 12 GHz network analyser £950
MARCONI TF2370 30 Hz-110 MHz spectrum analyser £950
MARCONI TF2370 30 Hz-110 MHz latest version £2000
MARCONI TF2370/2373 30 Hz-1250 MHz with frequency convertor £2000
BRUEL & KJAER 2033 1 Hz-20 KHz audio analyser £2250

SIGNAL GENERATORS

HP8672 2 GHz-18 synthesized signal generator £6000
HP8683D 2.3 Ghz-13 GHz OPT 001/003 solid state generator (as new) £4500
HP8620C/86290B 2 GHz-18 GHz sweeper (IEEE) £2500
HP8620C/86230B 1.8 GHz-4.2 GHz sweeper (IEEE) £1000
HP8620C sweeper mainframes (as new) IEEE £250
HP3586A 50 Hz-32.5 MHz selective level meter £1800
HP3314A 0.001 Hz-19.99 MHz function/waveform generator £2950
HP3336B 10 Hz-21 MHz synthesizer/level meter £650
HP8640A 500 KHz-512 MHz signal generator £500
HP8654A 10 MHz-520 MHz signal generator £350
HP8406A comb generator £275
HP8018A serial data generator £250
HP8007B 10 Hz-100 MHz pulse generator £250
HP8005B 0.3 Hz-20 MHz pulse generator £200
HP8616A 1.8 GHz-4.5 GHz generator £195
ROHDES & SCHWARTZ APN62 0.1 Hz-260 KHz LF generator (new) £2000
FARNELL SSG2000 10 KHz-2000 MHz synthesized generator (as new) £2000
FARNELL DSG2 0.0001 Hz-11 0 KHz synthesized (new) £350
FARNELL SSG520 10 MHz-520 MHz synthesized generator £400
RACAL 9081 5 MHz-520 MHz synthesized generator £450
ADRET 7100D 300 KHz-600 MHz synthesized generator £500
SYSTRON DONNER 1702 100 KHz-1000 MHz synthesized generator £600
WILTRON 610D/501 1 MHz-1500 MHz sweeper £1000
GIGA GR1101A 12 GHz-18 GHz pulse generator (as new) £650
POLARAD 1106ET 1.8 GHz-4.6 GHz with modulator £300
MARCONI TF2008 10 KHz-510 MHz signal generator/sweep £250
MARCONI TF2016 10 KHz-120 MHz signal generator £195
MARCONI TF2016A 10 KHz-120 MHz with rev power trip £245
MARCONI 6055B 850 GHz-2150 GHz signal source £225
MARCONI 6056B 2 GHz-4 GHz signal source £225
PHILIPS PM51320 0.1 Hz-2 MHz function generator £300
WAVETEK 182A 1 Hz-4 MHz function generator £195
EXACT 502LC 1 Hz-5 MHz function generator £195
ADRET 2230A 200 Hz-1 MHz synthesized source £195
LINSTEAD G100 10 Hz-10 MHz synthesized oscillator £200
SAYROSA MA30 10 Hz-10 KHz oscillator £150
THANDAR TG503 0.005 Hz-5 MHz pulse/function generator £225

TEST EQUIPMENT

ANRITSU MS65A 2 GHz error detector £1500
TEKTRONIX 1141/SPG11/TSG11 pal video generator £1500
TEKTRONIX 145 pal gen lock test signal generator £1500
TEKTRONIX 521A vector scopes £350
TEKTRONIX 318 50 MHz 16 channel logic analyser £350
TEKTRONIX A6902A isolator £450
TEKTRONIX TM501/DM501 bench multimeter £125
TEKTRONIX P6045 FET differential probe £250
TEKTRONIX P6015 high voltage scope probe £95
SYSTEMS VIDEO 2360 component video generator £1500
SYSTEMS VIDEO 1152/1155 compact 19" waveform monitor/ vectorscope £600
PHILIPS PM5567 pal vectorscopes £600
PHILIPS PM8252A dual pen recorder £225
SCHUMBERGER 7702 digital transmission analyser (new) £750
SCHUMBERGER 4010 radio test set £400
SCHLUMBERGER 4900 AF/RF measuring unit £400
SCHLUMBERGER AF405 3 tone generator/modulator £150
AMBER 4400A audio test set £500
FERROGRAPH RTS 2 audio test set + ATU 1 ..... £350
ROD-L M100BVS5 hipot tester £250
BRANDENBURG 0-30KVolt power supply £200
WANDAL & GOLTERMAN PS19 level generator £650
MARCONI 6950/6910 10 MHz-20 GHz RF power meter £850
MARCONI 6593A VSWR indicator £495
MARCONI 6440/6421 10 MHz-12.4 GHZ RF power meter £250
MARCONI TF2306 programmable interface unit £400
MARCONI TF2304 modulation meter £350
MARCONI TK2374 zero loss probe £200
MARCONI TF2300B modulation meter £100
MARCONI TF2432A 10 Hz-560 MHz frequency counter £125
MARCONI TF2604 RF millivoltmeters with probes £75
MARCONI TF2913 13 test line generator/insertor £250
MARCONI TF2160 20 Hz-20 KHz monitored AF attenuators £50
MARCONI TF2700 LCR meter battery portable £150
EIP 371 18 GHz source locking microwave counter £950
HP 5342A 500 MHz-18 GHz microwave frequency meter OPT001/ 003 ..... £1500
HP 435B/8481A/8484A/11708A 10 MHz-18 GHz (new/HP case/ manuals) £1100
HP 435B/8481A 10 MHz-18 GHz RF power meter £800
HP 435A/8482AH 100 KHz-4.2 GHz RF power meter £550
HP 436A digital RF power meters £650
HP 3581C 15 Hz-50 KHz selective voltmeter £600
HP 4815A RF vector impedance meter with probes £450
HP 4951A protocol analyser £350
HP3779A primary multiplex analyser £350
HP 3780A pattern generator/error detector £350
HP 333A distortion analyser £295
HP 3762A data generator £295
HP 11667A DC-18 GHz power splitter (new) £450
HP 11710A down converter £250
HP 8405A 1 MHz-1000 MHz vector voltmeter £300
HP 4261A LCR meter £350
HP 8750A storage normaliser £350
HP 3400A true RMS voltmeter (analogue) £145
HP 3403C true RMS voltmeter (digital) £195
HP 3406A 10 KHz-1200 MHz RF sampling voltmeter with probes £200
HP 3465A 4.5 digit multimeter £125
HP 3466A 4.5 digit autoranging multimeter £200
HP 3468A 5.5 digit multimeter/auto cal (LCD) £400
HP 5004A signature analyser £150
HP 5005A signature multimeter £300
HP 355D DC-100 MHz VHF attenuator 50ohm 1-120db £150
HP 1600A/1607A 32 bit logic analyser £100
BIRD 43 RF wattmeters £100
BIRD 81B termaline 80 watt coaxial resistor £150
BIRD 8321 30db attenuator 50w £185
BIRD 8329 30db coaxial attenuator 2000w £500
TELEWAVE TWL-300 RF dummy load 50 ohm £75
EXACT 334 precision current calibrator £195
SYSTRON DONNER M107 precision DC voltage source £450
FLUKE 103A frequency comparator £250
FLUKE 3330B prog constant current/voltage calibrator £450
BALLANTINE 6125C prog time/amplitude test set £400
HALCYON 500B/521A universal test system £150
BRADLEY 192 oscilloscope calibrator £500
ALTECH 533X-11 calibrator (1 HP355c/1 HP355D ATT) £295
KEMO DP1 1 Hz-100 KHz phase meter (new) £150
WAYNE KERR CT496 LCR meter battery portable £75
RADIOMETER TRB11 RLC component comparator £150
AVO 215-L/2 AC/DC breakdown/ionisation tester £400
AVO 8 MK5 testmeters with case/probes £75
FARNELL RB 1030/35 electronic load £495
FARNELL TM8 10 KHz-1000 MHz true RMS sampling voltmeter £350
SIEMENS U2233 psophometer (new) £350
SIEMENS D2108 200 KHz-30 Mhz level meter £350
SIEMENS W2108 200 KHz-30 mhz level oscillator £350
NARDA 3001 450 MHz-950 MHz directional coupler 10/20-30db £100
NARDA 3041-20 500 MHz-1000 MHz directional coupler 20db £125
NARDA 3044B-20 3.7 GHz-8.3 GHz 20db directional coupler £150
NARDA 3004-10 4 GHz-10 GHz 10db directional coupler £175
NARDA 60132 solid state amplifier 8 GHz-12 GHz £150
SAYROSA AMM 1.5 MHz-2 GHz automatic modulation meters £195
IWATSU SC7104 10 Hz-1000 MHz frequency counter £275
ROHDE & SCHWARZ NKS RF power meter £600
ROHDE & SCHWARZ ESU2 test receiver 25 MHz-1000 MHz £1200
EDDYSTONE 1837/2 30 MHz receiver + 1529 FSK unit £600
RACAL RA17 30 MHz valve receiver £200
RACAL RA1218 30 MHz receiver £300
RACAL RA1772 30 MHz receiver £750
RACAL RA1779/MA 1107 30 MHz receiver £1500
RACAL TTA1860S HF Transmitter 30 MHz 1.25KW ..... £POA
RACAL 9063 two tone oscillator £200
RACAL 9009 10 MHz-1500 MHz automatic modulation meter £250
RACAL 9008 1.5 MHz-2000 MHz automatic modulation meter £300
RACAL DANA 9904M 50 MHz universal counter timer £95
RACAL DANA 9914 10 Hz-200 MHz frequency counter £115
RACAL DANA 9915 10 Hz-560 MHz frequency counter £120
RACAL DANA 9916 10 Hz frequency counter £195
RACAL DANA 9919 10 Hz-1100 MHz frequency counter £295
RACAL DANA 9908 10 Hz-1100 MHz universal counter timer £400
RACAL DANA 9921 10 Hz-3000 MHz frequency counter £400
RACAL DANA 1991 10 Hz-160 MHz universal counter timer 9 digit £500
RACAL DANA 6000 microprocessing digital voltmeter £250
BRUEL & KJAER 2203 precision sound level meter/WB0812 filter £450
BRUEL & KJAER 2971 phase meter £450
BRUEL & KJAER 1022 beat frequency oscillator £350
BRUEL & KJAER frequency response analyser £250
BRUEL & KJAER 2425 0.5 Hz-500 KHz electronic voltmeter £225

SPECIAL OFFERS

BECKMAN DM110 digital multimeter with case/probes £50
SOLARTRON 7045 4.5 digit bench multimeter battery/mains £60
SMITHS 3" diameter altimeters £65
SIEMENS PDRM82 portable LCD radiation meters (new) £50
FARNELL LFM2 audio oscillators £45
SIMPSON 269-3 test meter with probes/manual (new) £45

ALL PRICES PLUS VAT AND CARRIAGE · ALL EQUIPMENT SUPPLIED WITH 30 DAYS WARRANTY

86 Bishopgate Street, Leeds LS1 4BB
Tel: (0113) 2435649 Fax: (0113) 2426881

CIRCLE NO. 141 ON REPLY CARD

Hewlett Packard 8683D

Solid State Microwave Signal Generators
2.3-13 GHz Freq' Range
Wideband FM for satellite
AM/FM & pulse modulation
Built in pulse generator
Options 001/003 fitted

£2,950 + Carriage + Vat

Supplied fully tested in as new condition. With 30 days parts & labour warranty.

M&B Radio DEALERS IN SURPLUS ELECTRONIC TEST EQUIPMENT

86 BISHOPGATE STREET LEEDS LS1 4BB

TEL: 01132 435649 FAX: 01132 426881

CIRCLE NO. 142 ON REPLY CARD

STOP! Just Take Two Steps to do Your Measurement

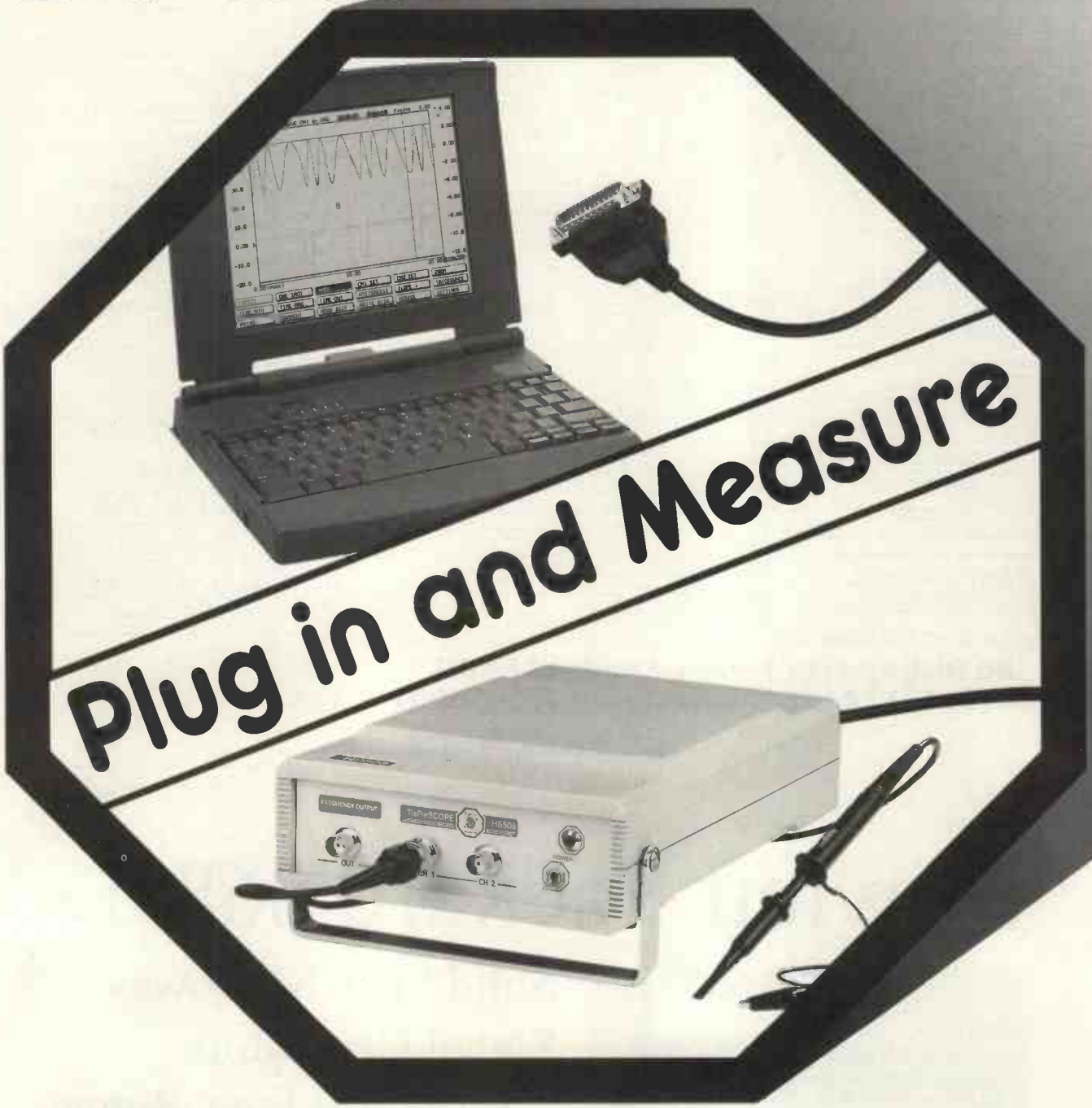

TiePieSCOPE

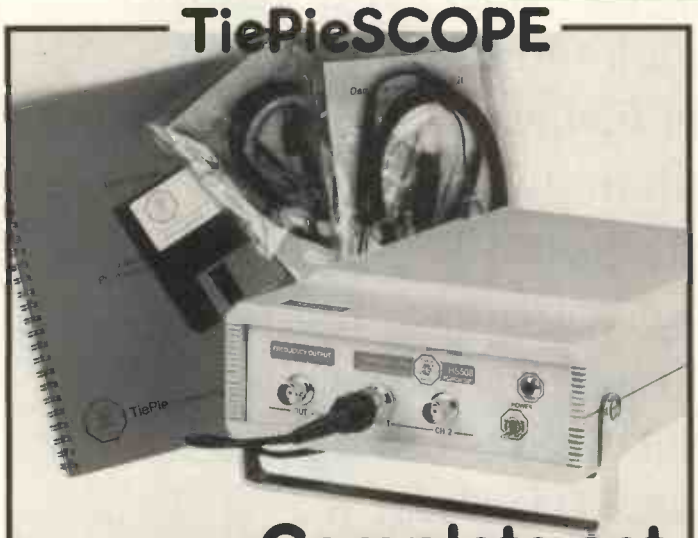

HS508 Complete set for £ 597.00

You can simply plug the new TiePieSCOPE - HS508 into the parallel port of your portable or desktop PC. With the advanced software, you can use this two channel, 8 bits, 50 MHz measuring instrument as a fast digital storage oscilloscope, including a lot more features than a single oscilloscope! Moreover, the TiePieSCOPE - HS508 contains a multiple display voltmeter (up to 5 MHz true RMS), a spectrum analyzer with an harmonic distortion meter and a transient recorder for recording a variety of signals.
The TiePieSCOPE - HS508 is supplied complete with user manual, software, and two probes.

Call now for a free demo diskette and our catalog!!

TiePie engineering (UK)
28 Stephenson Rd, Industrial Est., ST. IVES, CAMBS PE17 4WJ
Tel.: (01480) 460028 - Fax: (01480) 460340

TiePie engineering, The Netherlands
P.O. Box 115, 8900 AC LEEUWARDEN
Battenserreed 2, 9023 AR JORWERD
Tel.: (31) 5106 9238 - Fax: (31) 5106 9704

CIRCLE NO. 143 ON REPLY CARD

Transforming in C++

Gerard Moloney outlines how he developed a C++ library for performing geometric transformations.

Within all fields of engineering, matrices are widely applied in a wide variety of settings – in particular within electronic and electrical engineering. They provide a powerful tool in areas such as network analysis, and can generally be applied to solve simultaneous equations. In addition, matrices are useful in situations requiring geometric modelling, such as image processing and cad/cam.

With the advent of computer systems, the study of numerical processing and the development of associated software has become a major topic in its own right, with extensive libraries available commercially, primarily written in Fortran.

This article outlines the development of a C++ matrix class, and specifically a hierarchy of classes for geometric transformations. Its purpose is to look at providing an intuitive design for matrix applications and to discuss issues that arise in trying to provide a generic matrix class based on the C++ template mechanism.

Originally, the idea was to develop a general matrix class, as matrices appeared to be an ideal candidate for implementing in terms of templates.

We envisaged that matrices could be declared along the following lines,

```
matrix < int,6,4 > matrix1;
```

and the concept developed to allow matrices of different types and size to be manipulated in an intuitive fashion.

Eventually we decided to concentrate on a specific application, namely geometric transformations as there we had an immediate requirement for development in this area. The resulting library for two dimensional transformations is outlined below.

Geometric transformations

In the elementary study of matrices, a graphic application of their use is in the transformation of geometric objects. 'Transformation' generally means the movement and/or sizing of an object.

There is a set of standard transformations, which can be expressed as matrices. Likewise, as the coordinates of a point in space can be expressed as a matrix, this allows matrices and their associated algebra to be presented in a familiar and visual setting.

Rotation of a point about the origin is shown in **Fig. 1**. It is the set of standard transformations and their associated algebra which we wish to map intuitively onto our classes.

Specifying the library

Prior to the design phase, a number of factors emerged which were thought to be of practical importance with respect to applications to which the library was being applied. Initially, there was a requirement for the library to parallel very closely, the algebra of linear transformations. Optimisation was also required to avoid unnecessary pointer de-referencing and calls to the standard maths library.

In a number of respects, these mirror considerations must be considered generally during library development. In all cases there should be some compromise between performance and generality. Bearing this in mind, the set of classes for two dimensional transformations was developed, taking as a starting point a general matrix class that had previously been prototyped.

Library hierarchy

The hierarchy for the library, **Fig. 2**, forms a simple inheritance structure with all classes being derived ultimately from the matrix class. Two subsets divide the library into geometric primitives and transformations.

Homogeneous and non-homogeneous transformations.

By its very nature, a transformation may or may not map the origin onto itself. Those that do, such as rotations are termed homogeneous, whilst those that displace the origin to another point, such as a translation, are termed non-homogeneous. Intuitively it can be seen that if the origin is rotated it remains at the same point, whereas if moved by so many x and y units it obviously does not. To represent both these types of transformations for two dimensions it is necessary to employ 3 by 3 as opposed to 2 by 2 square matrices. Whereas for homogeneous transformations we have:

x'=ax+by and y'=cx+dy

with non-homogeneous transformations the formula also contains a third constant value:

x'=ax+by+e and y'=cx+dy+f

and our matrix algebra correspondingly changes from

$$\begin{bmatrix} x' \\ y' \end{bmatrix} = \begin{bmatrix} a & b \\ c & d \end{bmatrix} \begin{bmatrix} x \\ y \end{bmatrix} \text{ to } \begin{bmatrix} x' \\ y' \\ 1 \end{bmatrix} = \begin{bmatrix} a & b & e \\ c & d & f \\ 0 & 0 & 1 \end{bmatrix}$$

The point p can be represented by the column matrix

$$\begin{bmatrix} x \\ y \end{bmatrix}$$

and the rotation through the angle A by the square matrix

$$\begin{bmatrix} \cos A & -\sin A \\ \sin A & \cos A \end{bmatrix}$$

and the point p' is the matrix product,

$$\begin{bmatrix} x' \\ y' \end{bmatrix} = \begin{bmatrix} \cos A & -\sin A \\ \sin A & \cos A \end{bmatrix} \begin{bmatrix} x \\ y \end{bmatrix}$$

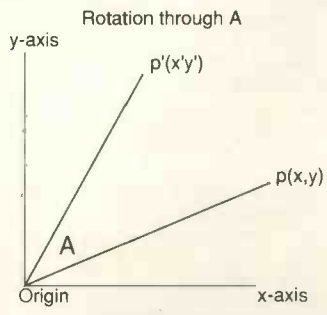

Fig. 1. Equations representing the standard set of transformations for rotation about a point.

Matrix class.

As mentioned earlier, the matrix class forms the basis from which both geometric primitives and transformations are derived. It is a class template which provides a basic matrix implementation as follows,

```
template < class T, int x, int y >
class matrix{
protected:
     T data [x][y];
     int row;
     int col;
public:
     matrix(): row(x), col(y) {}
     virtual ~matrix() {}
};
```

This allows matrices of any type and size to be declared – the two integer arguments specifying the matrix row and columns.

Using this as a base, specific matrix types can be derived to represent both geometric primitives and transformations. In this instance the combination of templates and derivation provides a powerful mechanism – in effect allowing precise specialisation to be defined to a very generic concept.

Note that a minimal number of functions is provided by the base class. Support for the multiplication of matrices is provided in the derived classes. This is the organisation chosen to ensure that only valid operations are performed without the need to resort to some type of run-time type checking.

Derived geometric primitives

The fundamental geometric primitive is a point:-

```
class point:public matrix< float,3,1 >{
public:
     point():matrix< float,3,1 >() {data[0][0]=0;
         data[1][0]=0;data[2][0]=0;}
     point(int a,int b):matrix< float,3,1 >() {data[0][0]=a;
         data[1][0]=b;data[2][0]=1;}
     ~point(){}
     friend class transformation;
};
```

Default arguments are provided for the template, and thus a point is defined as a 3 by 1 float matrix. Used throughout, this approach provides a solution to the perennial problem of declaring arrays of varying size. It is also equivalent to explicitly declaring an array, as follows,

```
float point [3][1];
```

As both homogeneous and non-homogeneous transformations are provided for, points are defined as 3 by 1 as opposed to 2 by 1 matrices – refer to panel.

Having defined a point, other objects are specified by their vertices. Two approaches are taken, whereby both a general polygon class and specific object classes are provided.

```
//General base class for two dimensional objects.
//Polygons are specified as arrays of points.
class polygon{
     point* pt;
     int size;
public:
     polygon(){}
     polygon(point* p,int sz): pt(p), size(sz) {}
     virtual ~polygon(){};
     point operator[](int x){return *(pt+x);} //return specified
vertex.
     friend class transformation;
};

//A triangle: array of points explicitly declared.
class triangle:public polygon{
     point vertices[3];
public:
     triangle(){}
     triangle(point   a,point   b,point   c){vertices[0]=a;ver-
tices[1]=b;vertices[2]=c;}
     ~triangle(){}
     point operator[](int x){return vertices[x];}
     friend class transformation;
};
```

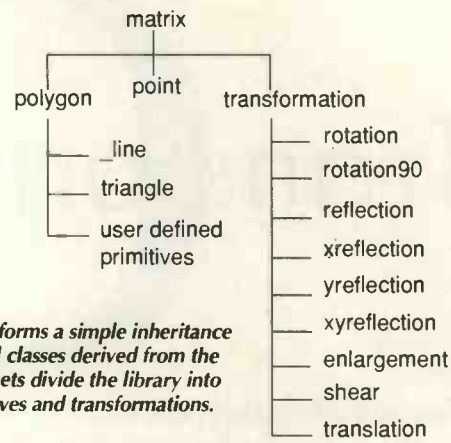

Fig. 2. Hierarchy forms a simple inheritance structure, with all classes derived from the matrix class. Subsets divide the library into geometric primitives and transformations.

In this way it is possible to avoid the need to de-reference pointers where this is a requirement. Users may likewise derive their own classes in a similar fashion. A flexibility in approach is thus maintained, while the underlying principle – namely that all objects are defined by their vertices – is adhered to.

Transformations

Having defined all geometric primitives in terms of points it is necessary to implement transformations on the points. A base transformation class is declared as follows,

```
class transformation:public matrix< float,3,3 >{
public:
     transformation();
     ~transformation(){};
     virtual point operator*(point& pt);
     virtual _line operator*(_line& ln);
     virtual triangle operator*(triangle& tr);
     virtual polygon operator*(polygon& poly);
     virtual transformation operator*(transformation& xform);
};
```

Operators are provided for the multiplication of points, polygons and specifically lines and triangles. Composite transformations are also provided for. These can be combinations of any of the derived transformations. Providing these operators ensures that illegal operations are not allowed, for example the multiplication of two primitives together.

With the algebra of the library in place, we can now proceed to declare a full list of standard transformations including rotations, reflections, enlargements, shears and translations. Also, where possible, optimisations are provided for in order to avoid calls to sine and cosine functions.

Examples are found in the case of rotation through 90° and reflection in the x or y axis.

The derived classes are very simple, requiring only constructors and destructors –\

```
//The rotation class: rotation by angle theta in radians
class rotation:public transformation{
public:
     rotation():transformation() {}
     rotation(angle theta);
     ~rotation(){}
};
```

Constructors supply appropriate values for the matrix data and all multiplications are dealt with by the base transformation class.

It is now possible to create and manipulate our primitives in a highly intuitive manner –

```
//create a point and rotate it

   point pt1(100,100);
   rotation r1(pi/4);
   pt1=r1*pt1;

//create a line and move it
   _line ln1(point(0,0),point(100,100));
   translation t1(40,60);
   ln1=t1*ln1;

//do composite transformations
   triangle tr1(point(100, 0),point(150, 50),point(150, -50));
   tr1=t1*r1*tr1;
```

and the results can be output to an appropriate display/device driver.

Conclusion

As stated at the outset, the library evolved from investigating templates *per-se*. By using a combination of templates and derivation, a very intuitive solution was developed fairly quickly in this particular area – one which has been extended to three dimensional transformations.

As far as general matrices are concerned, one problem encountered was in providing arithmetic operators that could be implemented universally for matrices defined in terms of class templates. For example, how can multiplication be simply implemented given two matrices of different types and size. Note, the two matrices will be in effect different types and the resultant in many cases a different type again.

For example, given,

```
matrix < int,3,5 > matrix1;
matrix < float,5,4 > matrix2;
```

how can the following be best achieved?

```
matrix3=matrix1*matrix2;
```

A partial solution for complex numbers was achieved using conversion operators,
But this by no means deals with the general case – especially as in this case all matrices involved are of the same size.

```
//a complexnumber
template <class T,int x=2,int y=2>
class complex:private matrix<T,x,y>{
    T data[x][y];
public:
    complex():matrix<T,x,y>(){}
    complex(T real,T imag);
    ~complex(){delete [] data;}
    operator complex<int>(){}
    operator complex<float>(){}
    complex operator+(const complex& compl);
    complex operator-(const complex& compl);
    complex operator*(const complex& compl);
};
```

A straightforward solution to this problem could be to use class templates. A better approach in designing C++ libraries generally for algebraic types may be to adopt an algorithmic approach similar to that taken in the Standard Template Library. In this case, algebraic operations would be defined in terms of function templates, their arguments being in this instance, matrices. The concept could be extended to cater for a range of algebraic structures to which a given set of operations could be applied. ■

Further reading

Maxwell, EA, Geometry by Transformations, Cambridge University Press. Pettofrezzo, AJ, Matrices and Transformations, Dover Publications. Stepanov, A & Lee, M, The Standard Template Library, Hewlett Packard Labs HP tech report HPL-95-011.

RAPID
Interactive development,
DATA LOGGER
easy to learn and
DEVELOPMENT
ready-made libraries with
MODULE
or without PCMCIA.

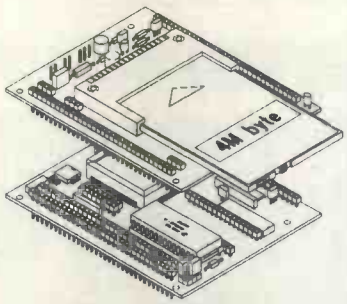

TDS2020CM +
TDS2020

LESS HASSLE THAN
1mA single battery supply,
THE TRADITIONAL
10-bit 8-ch A to D,
DESIGN PROCESS,
2 serial I/O, modem option,
YET TAILORED TO
customisable logging software.
THE JOB

Triangle Digital Services Ltd
Tel 0181-539 0285
Fax 0181-558 8110

CIRCLE NO. 144 ON REPLY CARD

WE HAVE THE WIDEST CHOICE OF USED OSCILLOSCOPES IN THE COUNTRY

TEKTRONIX 7000 SERIES OSCILLOSCOPES AVAILABLE FROM £200. PLUG-INS SOLD SEPARATELY

TEKTRONIX TAS475 4 Channel 100MHz Delay Sweep Cursors £1300
TEKTRONIX TAS455 Dual Trace 60MHz Delay Cursors £900
TEKTRONIX 2465 4 Channel 300MHz Delay Sweep Cursors £1750
TEKTRONIX 2246A 4 Channel 100MHz Cursors/Voltmeter etc £1250
TEKTRONIX 2335 Dual Trace 100MHz Delay Sweep £750
TEKTRONIX 485 Dual Trace 350MHz Delay Sweep £750
TEKTRONIX 475 Dual Trace 200MHz Delay Sweep £500
TEKTRONIX 465 Dual Trace 100MHz Delay £400
H.P. 1740A Dual Trace 100MHz Delay Sweep £350
TEKTRONIX 2215 Dual Trace 60MHz Delay Sweep £400
TEKTRONIX 455 Dual Trace 50MHz Delay Sweep £400
PHILIPS PM3217 Dual Trace 50MHz Delay Sweep £400
HITACHI V223 Dual Trace 20MHz Delay Sweep £250
GOULD OS1100 Dual Trace 30MHz Delay Sweep £240
BECKMAN 9020 Dual Trace 20MHz Delay Sweep £240
IWATSU SS5702 Dual Trace 20MHz £200
KIKUSUI 5530A Dual Trace 35MHz £220
GOULD OS300 Dual Trace 20MHz (No handle) £180
GOULD 4030 Dual Trace 20MHz Digital Storage Cursors £350
GOULD OS4020 Dual Trace 10MHz Digital Storage £250
GOULD OS4000 Dual Trace 10MHz Digital Storage £200
H.P. 1741A Dual Trace 100MHz Analogue Storage £400

THIS IS JUST A SAMPLE, MANY OTHERS AVAILABLE

EATON/AILTECH 380K11 Syn Sig Gen 1-2000MHz with PM3602 AM/FM Phase Mod P.O.A.
MARCONI 2019 Syn AM/FM Sig Gen 80KHz-1040MHz £1900
MARCONI 2018 Syn AM/FM Sig Gen 80KHz-520MHz £800
H.P. 8620C Sweep Osc 5.9-12.4GHz or 8-12.4GHz £350
H.P. 8620C Sweep Oscillator Main Frame only £200
RACAL 9081 Syn AM/FM Sig Gen 5-520MHz £450
MARCONI TF2337 Automatic Distortion Meter £200
MARCONI TF2331A Distortion Factor Meter 20Hz-20kHz 0.05% Un-used £225
MARCONI TF893B Audio Power Meter Sinad £250
MARCONI TF2163 Attenuator DC-1GHz £100
H.P. 8495B Attenuator DC-18GHz. 0-11dB in Steps £350
HATFIELD 2105 Attenuator 50 Ohm £75
TEKTRONIX TDR1502 £1250
R&S Video Noise Meter UPSF2 with UPSF2E 40-Hz-10MHz £1500
R&S Video Analyser type UVF £POA
H.P. 8160A Programmable Pre Pulse Gen 50MHz £POA
PHILIPS PM5134 Sweep Fun Gen 0.001Hz-20MHz Sine/Sq/Tri etc £300
PHILIPS PM5190 Syn Func Gen 0.001Hz-2MHz Sine/Sq/Tri £750

BRUEL & KJOER EQUIPMENT AVAILABLE PLEASE ENQUIRE

SPECTRUM ANALYSERS

TEKTRONIX 2710 10KHz-1.8GHz £POA
IFR A7550 Synthesized 1GHz £4000
H.P. 8565A 0.01-22GHz £4000
H.P. 3585A 20Hz-40MHz £POA
H.P. 3580A 5Hz-50KHz £800
POLARAD 641-1 10MHz-18GHz £1000
H.P. 182 with 8558B 100KHz-1500MHz from £1500
H.P. 141T with 8555A & 8552B 10MHz-18GHz £1700
H.P. 141T with 8554B & 8552B 500KHz-1250MHz £1200
H.P. 141T with 8553B & 8552A 1KHz-110MHz £800
H.P. 141T MAIN FRAMES ONLY, GOOD TUBES £225
MARCONI TF2370 30Hz-110MHz £1000

H.P. 5341A Frequency Counter 50MHz-1.5GHz LED £300
RACAL 1998 Frequency Counter 1.3GHz (Options GPIB & High Stab) £900
MARCONI 2437 Universal Counter/Timer DC-100MHz 8 digit £175
MARCONI 2430A Frequency Counter 10Hz-80MHz 8 digit £125
RACAL 9916 Frequency Counter 10Hz-520MHz £175
H.P. 3435A 3½ digit Multimeter AC/DC/Ohms/Current. LED £100
SOLARTRON 7065 6½ digit Microprocessor Voltmeter AC/DC/Ohms/Auto £400
SOLARTRON 7045 4½ digit Multimeter Volts/Amps/Ohms £80
THANDAR 1503 4¾ digit Multimer with Adaptor £75
Fluke 77 Handheld DMM 3½ digit with case £100
Fluke 8050A Bench/Portable DMM 4½ digit True RMS £225
Fluke 8010A Bench/Portable DMM 3½ digit True RMS £150
H.P. 3310A Func Gen 0.0005Hz-5MHz Sine/Sq/Tri/Pulse/Ramp/DC £200
WAVETEK 182A Func Gen 0.004Hz-4MHz Sine/Sq/Tri/DC/TTL Pulse etc £225
THANDAR TG501 Func Gen 0.0005Hz-5MHz Sine/Sq/Tri/Ramp/Pulse/etc £175
GOULD J3B Sine/Square Oscillator 10Hz-100KHz £150
FEEDBACK FG600 Sine/Sq/Tri 0.01Hz-100KHz £60
H.R. SMITH ANTENNA TEST SET type 12-602-4 £2000
UNAOHM EP501 Audio Analyser £350
PHILIPS PM5565 Waveform Monitor £300
PHILIPS PM8917 Video Line Selector £200
FERROGRAPH RTS2 Recorder Test Set £250
KEMO Dual Variable Filter VBF/3 0.1Hz-10KHz £200
RACAL Instrumentation Recorder Type Store 4DN £350
RACAL Instrumentation Recorder Type Store 7DS £500
NAGRA IV-SJ Tape Recorder £350
AWA Distortion and Noise Meter F242A £400
LEADER LSG216 Signal Generator £450
MARCONI TF2700 Universal Bridge. Battery Operated from £150
MARCONI TF1313A Universal LCR Bridge 0.1% £125
WAYNE KERR B424 Digital Component Meter LCR £200
HEALTHKIT IB RLC Bridge £60
SORENSEN DCR600-4.5B 0-600 Volts 0-4.5Amps £700
H.P. 6268 0-40 Volts; 0-30 Amps £500
FARNELL H30/100 0-30 Volts; 0-100 Amps, Metered £800
FARNELL B30/10 30 Volts; 10 Amps Variable £150
FARNELL L30-5 0-30 Volts; 0-5 Amps. 2 Meters £150
FARNELL L30E 0-30 Volts; 0-5 Amps. Metered £100
FARNELL L30-2 0-30 Volts; 0-2 Amps. Metered £80
FARNELL LT30-1 0-30 Volts; 0-1 Amp. Twice £130
FARNELL L30-1 0-30 Volts; 0-1 Amp. Metered £65
THURLBY-THANDAR TSP3222 Programmable 32V; 2Amp Twice GPIB Digital £500
THURLBY PL320QMD 0-30V; 0-2A Twice Digital £225
BRANDENBURG Alpha Series 2 Models 2702 15KV £300
BRANDENBURG Model 472R +/- 2KV Metered £200

MANY OTHER POWER SUPPLIES AVAILABLE

NEW EQUIPMENT

HAMEG OSCILLOSCOPE HM1005 Triple Trace 100MHz Delay Timebase £847
HAMEG OSCILLOSCOPE HM604 Dual Trace 60MHz Delay Sweep £653
HAMEG OSCILLOSCOPE HM303. Dual Trace 30MHz Component Tester £422
HAMEG OSCILLOSCOPE HM205. 3 Dual Trace 20MHz Digital Storage £653
All other models available–all oscilloscopes supplied with 2 probes

BLACK STAR EQUIPMENT (P&P all units £5)

APOLLO 10-100MHz Counter Timer Ratio/Period/Time interval etc £234
APOLLO 100-100MHz (As above with more functions) £332
METEOR 100 FREQUENCY COUNTER 100MHz £118
METEOR 600 FREQUENCY COUNTER 600MHz £145
METEOR 1000 FREQUENCY COUNTER 1GHz £189
JUPITOR 500 FUNCTION GEN 0.1Hz-500kHz Sine/Sq/Tri £125
ORION COLOUR BAR GENERATOR Pal/TV/Video £243
All other Black Star Equipment available

OSCILLOSCOPE PROBES Switchable ×1 ×10 (P&P £3) £13

Used Equipment–GUARANTEED. Manuals supplied if possible.
This is a VERY SMALL SAMPLE OF STOCK. SAE or Telephone for lists. Please check availability before ordering.
CARRIAGE all units £16. VAT to be added to Total of Goods and Carriage.

STEWART of READING
110 WYKEHAM ROAD, READING, BERKS RG6 1PL
Telephone: (01734) 268041. Fax: (01734) 351696
Callers Welcome 9am-5.30pm Monday to Friday (until 8pm Thursday)

CIRCLE NO. 145 ON REPLY CARD

TELNET

8 CAVANS WAY,
BINLEY INDUSTRIAL ESTATE,
COVENTRY CV3 2SF
Tel: 01203 650702
Fax: 01203 650773
Mobile: 0860 400683

(Premises situated close to Eastern-by-pass in Coventry with easy access to M1, M6, M40, M42, M45 and M69)

OSCILLOSCOPES

Kikusui COS 6100 – 100MHz 5 channel 12 trace £475
Hewlett Packard 1980B – 100MHz – 2 channel – HP1B programmable £750
Gould OS3000 – 40MHz, dual ch. £250
Gould 5110 – 100MHz intelligent oscilloscope £950
Hewlett Packard 1707A, 1707B – 75MHz dual ch. ..... from £275
Hewlett Packard 1740A, 1741A, 1744A, – 100MHz dual ch. ..... from £350
Hewlett Packard 54201A – 300MHz digitizing £1750
Hewlett Packard 54100D – 1GHz digitizing £4950
Nicolet 3091 – Low freq D.S.O. £1100
Philips 3295 – 350MHz dual ch. £1500
Philips 3315 – 60MHz D.S.O. £750
Lecroy 140 – 100MHz D.S.O. £3250
Tektronix 468 – 100MHz D.S.O. £800
Tektronix 2213 – 60MHz dual ch. £425
Tektronix 2215 – 60MHz dual ch. £450
Tektronix 2225 – 50MHz dual trace £450
Tektronix 2235 – 100MHz dual ch. (portable) £800
Tektronix 2335 – 100MHz dual ch. (portable) £750
Tektronix 464/466 – 100MHz, storage ..... from £350
Tektronix 465/465B – 100MHz dual ch. ..... from £350
Tektronix 7313, 7603, 7613, 7623, 7633, – 100MHz 4 ch. ..... from £300
Tektronix 7704 – 250MHz 4 ch. ..... from £650
Tektronix 7904 – 500MHz ..... from £850
Telequipment D68 – 50MHz dual ch. £200
Philips PM3295A – 400MHz dual channel £1950
Hewlett Packard 54501A – 100MHz Digitising – 4 channel £1950
Tektronix 2236 – 100MHz Dual Trace with Counter/Timer/Dmm £995
Iwatsu TS 8123 – 100MHz Dig. Storage £850

Other scopes available too

SPECTRUM ANALYSERS

Tektronix 496P – 1KHz-1.8GHz programmable £4500
Hewlett Packard 8590A – KHz-1.5GHz – £4250
Tektronix 2710 – KHz-1.8GHz £4250
Anritsu MS2601A – 10KHz-2.2GHz – £5250
Hewlett Packard 3582A – dynamic signal analyser, dual channel £7500
Hewlett Packard 3580A – 5Hz–50KHz £995
Hewlett Packard 3582A – 25KHz analyser, dual channel £2500
Hewlett Packard 182T with 8559A (10MHz–21GHz) £3750
Marconi 2370 – 110MHz £995
Marconi 2371 – 30Hz–200MHz £1250
Rohde & Schwarz – SWOB 5 Polyskop 0.1–1300MHz £2500
Schlumberger 1250 – Frequency response analyser £2500
Alltech 727 – 22.4GHz ..... } £2000
Alltech 70727 – Tracking Generator for 727 (10KHz– 12.4GHz) ..... }
Polrad 641-1 – 10MHz–18GHz £1500
Hewlett Packard 35601A – Spectrum Analyser Interface £1000
Hewlett Packard 8754A – Network Analyser – 4–1300MHz £3250
Hewlett Packard 3709B – Constellation Analyser with 15709A High Impedance Interface (as new) £8750
Advantest 4133B – 10KHz–20GH – (60GHz with ext. mixers) £8995
Eaton/Alltech 757 – 10KHz–22GHz £2750
Hewlett Packard 853A – with 8559A (0.1–1500MHz) £3500
Hewlett Packard 853A with 8559A (0.01–21GHz) £4250
Hewlett Packard 8565A (0.01–22GHz) £4000

Hewlett Packard 141T + 8552B + 8555A (10MHz–18GHz) £1600
Hewlett Packard 8756A – Scalar network analyser (10MHz–40GHz) £2250
Hewlett Packard 8505A – Network analyser (500KHz–1.3GHz) £4000

MISCELLANEOUS

Hewlett Packard 8601A – generator/sweeper, 110MHz £300
Hewlett Packard 3326A – two channel synthesiser £3750
Hewlett Packard 4948A – transmission impairment measuring set £2000
Hewlett Packard 3455A – 6½ digit multimeter (autoscal) £750
Hewlett Packard 8660C – synthesised signal generator (1300MHz) £175
Hewlett Packard 3575A – gain/phase meter 1Hz-13MHz £500
Hewlett Packard 8165A – 50MHz programmable signal source £1650
Hewlett Packard 3746A – selective level measuring set £1750
Hewlett Packard 6002A – autoranging 50V-10A, PSU £650
Hewlett Packard 8403A – modulator £500
Hewlett Packard 334A – distortion analyser £300
Hewlett Packard 339A – distortion measuring set £1500
Hewlett Packard 5314A – (new) 100MHz universal counter £250
Hewlett Packard 5350B – (new) microwave frequency counter (20GHz) £2500
Anritsu ME462B – DS-3 transmission analyser £3000
Marconi 2305 – modulation meter £2500
Marconi 2871 – data communications analyser £2000
Marconi 6500 – automatic amplitude analyser £1750
Anritsu MG642A – Pulse pattern generator £1500
Datalab DL 1060 – Programmable Transient Recorder £350
Datron 1061 – Precision multimeter £650
Dynaepert TP20 – Intelliplace tape peel tester, immac. cond. £1950
E.I.P. 331 – 18GHz frequency counter £850
E.I.P. 548A – frequency counter (26.5GHz) £3000
Farnell TSV70 MkII – Power Supply (70V–5A or 35V–10A) £225
Ferrograph RTS2 – Audio test set with ATU1 ..... £500
Heiden 1107 – 30v-10A Programmable power supply (IEEE) £850
Hewlett Packard 3325A – 21MHz synthesiser/function gen. £1500
Hewlett Packard 3437A – System voltmeter £350
Hewlett Packard 3438A – Digital multimeter £200
Hewlett Packard 3490A – Digital multimeter £250
Hewlett Packard 3586A – Selective level meter £1750
Hewlett Packard 3711A/3712A/3791B/3793B – Microwave link analyser £3500
Hewlett Packard 5385A – Frequency counter 1GHz (HPIB) with Opts 001/003/004/005 ..... £995
Hewlett Packard 6181C – D.C. current source £150

Hewlett Packard 6261B – Power supply 20V–50A £500
DISCOUNT FOR QUANTITIES

Hewlett Packard 7402 – Recorder with 17401A x 2 plug-ins £300
Hewlett Packard 8005B – Pulse generator £250
Hewlett Packard 8011A – Pulse gen. 0.1Hz–20MHz £500
Hewlett Packard 8152A – Optical average power meter £1250
Hewlett Packard 8158B – Optical attenuator with opt's 002 + 001 ..... £1100
Hewlett Packard 8620C – Sweep oscillator mainframe £400
Hewlett Packard 8750A – Storage normaliser £375
Hewlett Packard 3456A – Digital voltmeter £750
Hewlett Packard 8684A – 5.4GHz to 12.5GHz Sig Gen £3500
Hewlett Packard 8640B – AM/FM Signal Gen. (512MHz) £850
Hewlett Packard 5340A – 18GHz Frequency Counter £900
Hewlett Packard 5356A – 18GHz Frequency Converter Head £450
Hewlett Packard 432A – Power Meter (with 478A Sensor) £275
Hewlett Packard 435A or B – Power Meter (with 8481A/8484A) ..... from £750
Hewlett Packard 4953A – Protocol analyser £2995
Hewlett Packard 5359A – Time synthesiser ..... £P.O.A.
Hewlett Packard 5505A – Laser display ..... £P.O.A.

Hewlett Packard 3488A – HP–IB switch/control unit (various plug-ins available) £650
Hewlett Packard 3581C – Selective voltmeter £900
Hewlett Packard 3708A – Noise and interference test set £8500
Hewlett Packard 4192A – LF. impedance analyser (5Hz–13MHz) £9000
Hewlett Packard 4261A – LCR meter (digital) £500
Hewlett Packard 4271B – LCR meter (digital) £900
Hewlett Packard 4342A – Q meter £995
Hewlett Packard 4954A – Protocol analyser £3500
Hewlett Packard 8116A – Pulse/function generator (1MHz–50MHz) £2750
Hewlett Packard 8349B – Microwave broadband Amp (as new) 2–20MHz £4700
Hewlett Packard 8350B – Sweep oscillator mainframe (plug-ins avail) £2650
Hewlett Packard 8683A – Microwave signal gen. (2.3–6.5GHz) £3500
Hewlett Packard 8656A – Synthesised signal gen. (100KHz–990MHz) £1750
Hewlett Packard 8901B – Modulation analyser (150KHz–1300MHz) £4250
Hewlett Packard 8903A – Audio analyser (20Hz–100KHz) £2600
Hewlett Packard 8903B – Audio analyser (20Hz–100KHz) £3250
Marconi 2337A – Automatic dist. meter £150
Marconi 893B – A/F power meter £295
Marconi 2019A – 80KHz–1040MHz synthesised sig. gen £1950
Philips PM 5167 – 10MHz function gen. £400
Philips PM 5190 – LF synthesizer w/th GPIB £800
Philips PM 5565 – Waveform monitor £200
Philips PM 5567 – Vectorscope £600
Philips PM 8226 – 5-pen recorder £550
Phoenix 5500A – telecomms analyser with various interface options £2500
Powersence – Power line analyser £1950
Racal 9301A True RMS R/F millivoltmeter £300
Racal Dana 1992 – 1300MHz frequency counter opts 48+55 ..... £800
Racal Dana 3100 40–130MHz synthesiser £750
Racal Dana 9081 Synth. sig. gen. 520MHz £550
Racal Dana 9084 Synth. sig. gen. 104MHz £450
Racal Dana 9242D Programmable PSU 25V–2A £300
Racal Dana 9246S Programmable PSU 25V–10A £400
Racal Dana 9303 True RMS/RF level meter £650
Racal Dana 9921 3GHz frequency counter £450
Schlumberger SI 4040 – Stabilock, high accuracy 1GHz radio test set £5950
Schlumberger 4923 – Radio Code Test Set £1500
Schlumberger 2720 – 1250MHz Freq. Counter £600
Systron Donner 6054B or D – 18GHz or 24GHz Freq. Counter ..... from £800
Tektronix DAS9100 Series Logic Analyser £500
Tektronix – Plug-ins – Many available such as PG508, FG504, SC504, SW503, SG 502 etc.
Tektronix TM5003 + AFG5101 Abritrary Function Gen. £1750
Tektronix 1240 Logic Analyser £750
Tektronix 576 – Curve tracer (with test fixture) £1250
Textronix AM503 + TM501 + P6302 – current probe amplifier £995
Textronix PG506 + TG501 + SG503 + TM503 – Oscilloscope calibrator £1995
Textronix CG5001 – Programmable oscilloscope cal. generator £7500
Time 9811 Programmable resistance £600
Time 9814 Voltage calibrator £750
Wayne Kerr N905 – Precision LCR meter £850
Wiltron 560 Scalar Network analyser £800

MANY MORE ITEMS AVAILABLE – SEND LARGE S.A.E. FOR LIST OF EQUIPMENT ALL EQUIPMENT IS USED – WITH 30 DAYS GUARANTEE. PLEASE CHECK FOR AVAILABILITY BEFORE ORDERING – CARRIAGE & VAT TO BE ADDED TO ALL GOODS

CIRCLE NO. 146 ON REPLY CARD

When Performance is more important than size:-

two new re-programmable BASIC Stamp Computers.

BS1-IC
8 I/O lines
up to 100 program lines
2,000 lines/sec
Comms to 2400 baud
£29 single price

BS2-IC
16 I/O lines
up to 600 program lines
10,000 lines/sec
Comms to 9600 baud
£49 single price

Programming package £66

Milford Instruments Tel 01977 683665 Fax 01977 681465

CIRCLE NO. 147 ON REPLY CARD

NEW PRODUCTS CLASSIFIED

Please quote *"Electronics World + Wireless World"* when seeking further information

ACTIVE

A-to-D and D-to-A converters

12-bit, multiplying d-to-as . Linear is producing *LTC8043/8143/7543 and 7541A*, all pin-for-pin replacements for the standard DAC and AD type numbered analogue-to-digital converters, and all having reduced vulnerability to temperature and supply variations. Gain and non-linearity with temperature are better than 1ppm/°C and 0.1ppm/°C, while power supply rejection is ±0.0001%. Linear Technology (UK) Ltd. Tel., 01276 677676; fax, 01276 64851.

Discrete active devices

Hermetic power mosfets. IR has new hermetically sealed power mosfets in the TO-257AA package. They are rated at 100W to close the gap between TO-39 types at under 20W and the 150W TO254AA devices. Ceramic seal feedthroughs are used to cope with the full military temperature range. Both p-channel and n-channel devices are available at 60-500V with on-resistance down to 40mΩ. International Rectifier. Tel., 01883 713215; fax, 01883 714234.

S-m Schottkys. Two ranges of Schottky diodes introduced by International Rectifier are produced in SOT-223 and SMC surface-mounting packages. *20CJQ* diodes in SOT-223 cover the 30-100V range of reverse voltages and offer a forward voltage drop of, typically, 0.59V at 2A and 25°C or 0.52V, 2A, 125°C. In the smc package, the *30BQ* series comes in 15-100V voltages, the 15V type, for example, dropping 0.35V at 3A and 125°C and is said to be particularly useful for 3.3V output rectification in portable equipment. International Rectifier. Tel., 01883 713215; fax, 01883 714234.

High-side switches. Protected against temperature and overload, the *BUK202* and *BUK203* fets by Philips are high-side switches offering the choice of an internal, 150Ω ground-pin resistor, eliminating extra design work and, as a bonus, saving a little space. Total quiescent chip current is under 100nA. These are 50V devices with a typical R_{on} of 28Ω and continuous currents of up to 20A. A feature is the integral charge pump to hold the mosfets in conduction to avoid the output spikes generated by other available devices. Philips Semiconductors (Eindhoven). Tel., 00 31 40 722091; fax, 00 31 40 724825.

Optical devices

Bright blue leds. Blue leds in a range from Sloan AG of Switzerland put out 200, 400, 600 and 1000mcd at 450nm. They take 20mA from 3.6V, optional resistors being incorporated for higher voltages, and have clear or blue Fresnel lenses to give a 180° viewing angle. These leds are said by sloan to be brighter than some filament bulbs, the 1000mcd type still emitting 100mcd at 2mA. Roxburgh Electronics Ltd. Tel., 01724 281770; fax, 01724 281650.

Memory chips

Fast fifos. IDT claims its 100MHz 1-bit fifos to be 67% faster than the competition's and up to 30% cheaper. They have depths of 64, 256 and 512bit and include programmable almost-full and almost-empty flags and output enable on an additional pin. Integrated Device Technology. Tel., 01372 363734; fax, 01372 378851.

Low-power flash cards. Epson announces a range of PCMCIA Type 1 flash memory cards in sizes from 4Mbyte to 22Mbyte. Current consumption of the ATA card is 500μA in sleep mode and 60mA/100mA for read/write, no dc input being needed to write. Start-up time for sleep-to-ready and rest-to-ready is 20ms. Epson. Tel., 01442 227222; fax, 01442 227244.

Microprocessors and controllers

Temperature controller. The *BTC-2220 Fuzzy Logic* and PID controller from Brainchild enables a process to reach a set temperature in a short time with little overshoot or external load disturbance. A 4-digit display indicates the process value and three keys on the front panel for control and input parameters, of which those accessible by the user can be limited by, say, a supervisor. Power is 12-36V or 90-240Vac and output is a 3A control relay and alarm, a 4-20mA current loop or 0-10V. The instrument is programmable for various sensors and RS485 communication is provided. Brainchild Temperature Controllers Ltd. Tel., 01903 216514; fax, 01903 219662.

Motor control. NEC's *μPD7836x* is a 16-bit microcontroller, a member of the *78KIII* family, which is designed for the pwm control of motors at frequencies up to 400kHz and for controlling dc motors and uninterruptible power supplies, being equipped with three pairs of pwm timers. Since these functions use only a small part of its processing power, the device is also able to perform other processing tasks for the other parts of the system. Minimum instruction cycle time is 125ns. Sunrise Electronics Ltd. Tel., 01908 263999; fax, 01908 263003.

Real-time multi-tasking. *MultiTRAX* and *MegaTRAX* by Aries are claimed to be "the ultimate controllers for real-time response". Using code written in Basic or C, they have five features which, we are told, are synergistic: a run-time compiler for speed; multi-tasking; hardware interrupts; commands to insert machine code into Basic programs; and extended commands for the five optional hardware modules. Development time is low, since the code development system is built in. Aries Electronics (Europe). Tel., 01908 260007; fax, 01908 260008.

Single-board controller. *VITRAX-PLUS* combines parallel and serial i/o functions and has self-contained Basic language development; its latest version also possesses expanded memory, and lcd module and software support for transmission to a second port. There is space on the board for a real-time clock and a 10-channel a-to-d converter. Memory consists of ram and eprom for up to 14Kbyte of code and 16Kbyte of ram for tables and data. Aries Electronics (Europe). Tel., 01908 260007; fax, 01908 260008.

PIC with analogue features. The new mid-range *PIC16C621* 8-bit controller by Microchip has a range of analogue facilities including two voltage comparators, a voltage reference and 4V brown-out protection.It is an eprom-based microcontroller and the 1K by 14 one-time programmable memory allows rapid response to code changes and quick verification. The device is supported by development aids, both by Microchip and others. Arizona Microchip Technology Ltd. Tel., 01628 851077; fax, 01628 850259.

Oscillators

"Smallest" crystal oscillator. AVX has the *KT11 Series* of crystal oscillators, which are contained in a space of 11 by 9 by 4mm and which will handle reflow soldering. Frequency range is 12.8-19.2MHz at a tolerance of 2ppm, an optional afc function allowing small adjustments by an external voltage. Supply is 3V or 5V. AVX Ltd. Tel., 01252 770000; fax, 01252 770001.

Cameras

Camera/monitor. *CPM2104-C* by Hitachi is a 21in, 400-line colour monitor with a built-in VK-C15E dsp camera, intended to deter rogues and vagabonds, since the camera output appears on the screen with no very obvious camera position. In addition, the picture is a good deal better than the average from this kind of equipment, the dsp camera giving automatic white balance, iris and backlight compensation. There is an RS232C socket for connection to a video recorder. Hitachi Home Electronics Ltd. Tel., 0181 849 2000; fax, 0181 569 2763.

PASSIVE

Passive components

Power chip inductors. Surface-mounted power chip inductors in the *1210* range from Coiltronics are in two series: the *CTX32*, carrying up to 425mAdc and the *CTX32C*, which handles 850mA dc. *CTX32* components come in 45 inductance values at *Q*s between 20 and 30 from 0.12μH to 470μH and are meant for use at low levels of current, while there are 16 inductance values in the *CTX32C* type, from 1μH to 330μH, at *Q*s of 10-20. METL. Tel., 01844 278781; fax, 01844 278746.

SMT chip inductors. Pulse Engineering's *1008CX* and *0805CX* miniature chip inductors are wire-wound on an alumina substrate and

Please quote *"Electronics World + Wireless World"* when seeking further information

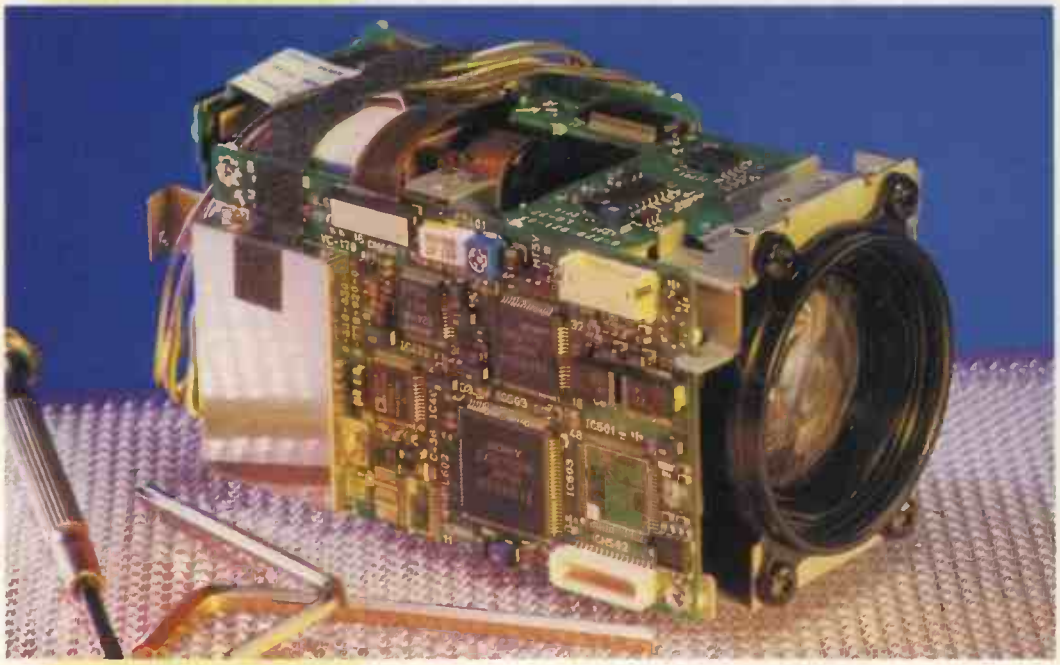

Small colour ccd. Intended for use in security and industrial applications and remote sensing, Sony's new *EVI-331* colour charge-coupled device camera measures 53 by 51, by 100mm. Features include a 1/3in image sensor, twelve-times zoom with auto-focus and auto-macro, composite and Y/C output, auto-tracing white balance, auto-exposure, backlight compensation and RS232C control. Horizontal resolution is over 450 lines from a 752 (horizontal) by 582 pixel format, and the exposure speed is 0.02s-0.0001s. Sensitivity is 7lux at f1.8. Sony Computer Peripherals & Components. Tel., 01932 816000; fax, 01932 817001.

come in values from 3.3nH to 4700nH at *Q*s of over 50 at 50MHz. Self-resonant frequencies are in excess of 6GHz. Wire terminations are spot-welded. Silicon Concepts Ltd. Tel., 01428 751617; fax, 01428 751603.

Resistor arrays. Thick-film chip resistor arrays from AVX have up to four components in a three-element *0805* or a four-element *1206* surface-mounting package. The range of values is 10Ω to 2.2MΩ and maximum working voltage is 50V with a 100V overload. Tolerance is ±10% (*K* type) or ±5% (*J* type). AVX Ltd. Tel., 01252 770000; fax, 01252 770001.

Low-impedance capacitors. Rubycon has a miniaturised *XYF* range of capacitors made by a new process to allow all capacitance/voltage ratios to be contained within standard can sizes, allowing a shorter lead time and lower cost. Voltage ranges are 6.3-100V, capacitance values 0.47μF-15000μF and temperature range –40°C to 105°C. Rubycon Corporation. Tel., 0181 8423221; fax, 0181 8417691.

Audio products

Digital audio processor. Philips's *TDA1546T bitstream digital filter* is effectively a digital audio processor and d-to-a converter that includes the functions of volume control in 0.375dB steps, balance and tone control, peak signal-level reading, overload detection and spectrum analysis. It uses 128 times oversampling , has digital de-emphasis filtering for 32kHz, 44.1kHz or 48kHz sampling rates and offers thd + noise of –88dB and wide dynamic range. Philips Semiconductors (Eindhoven). Tel., 00 31 40 722091; fax, 00 31 40 724825.

Connectors and cabling

Filtered D-type connectors. A range of D-type subminiature connectors, ferrite filtered against emi/rfi, is announced by Steatite. Filtering is pin-to-ground and pin-to-pin, preventing common-mode noise in signal or data lines in the 10-300MHz range. Current rating is 5A, dielectric strength 1000V ac and the connectors meet FCC, VDE and other emc requirements. Steatite Insulations Ltd. Tel., 0121 6436888; fax, 0121 643 2011.

Double-height BNC. *Westside* offers a double right-angled, pcb-mounted BNC socket, designed to save space. Contacts are silver-plated turned brass with a Teflon insulator and black ABS body. Westside Supplies Ltd. Tel., 01243 536350; fax, 01243 533686.

Mains inlets for portables. Bulgin's *Polysnap* is a range of miniature, low-profile mains power inlets meant for portable equipment. The connectors are based on the standard Class 1 EN60 320 and have a single-pole or double-pole, lit or unlit rocker switch. Contact ratings are 10A, 250V ac resistive or 4A, 250V ac inductive. The inlets snap fix to panels of 1, 1.5, 2, or 3mm thickness with a single rectangular cutout. Gothic Crellon Ltd. Tel., 01734 788878; fax, 01734 776095.

Displays

Lcd touch screen. A new type of lcd module, launched by *Crystaloid* combines a touch screen and lcd in one module, giving a viewing area of up to 72 square centimetres. It contains all lcd drive electronics and touch screen logic. There are four types in the range and the lcd matrix can be programmed for a variety of information, both alphanumeric and graphic. The touch screen overlay comes with keys in either 6 by 16 or 4 by 16 configuration and is able to accept a range of touch characteristics. Ginsbury (UK) Ltd. Tel., 01634 290903; fax, 01634 290904.

12in colour lcd. Having a luminance of 200cd/m^2, NEC's *NL10276AC24-01* (there must be a reason for all these novel-length type numbers) is more than twice that of the 10.4in types. It is an active-matrix tft colour unit with a display area of 310 by 235mm, resolving 1024 by 768 pixels. The high luminance is given by four tubes: two for back light and two for edge lighting. Power needed is 16W. NEC Electronics (UK) Ltd. Tel., 01908 691133; fax, 01908 670290.

Frugal colour tft. Hitachi has two 10.4in, colour thin-film transistor displays that use 46% less power, are 31% lighter than existing models and are compatible with colour supertwist nematic types. *TX26D68VC1CAA* (VGA) and *TX26D88VC1CAA* (SVGA) have a display area of 211.2 by 158.4mm, power consumption, including backlight, being 1.5W and 2W and weight 390g. Response time is 55ms and have a brightness of 70cd/mm^2. Power supply needed is 3.3V to the internal converter. Hitachi Europe Ltd. Tel., 01628 585163; fax, 01628 585160.

Low-deflection load cell. Control Transducers has the *Model JP* semiconductor load cell which deflects by a maximum of 0.05mm for its full load of 900kg and is intended for use in applications where its presence must not affect mechanical performance. The element is a germanium strain gauge, which gives a full-scale output of 150mV for an excitation voltage of up to 24V to an accuracy better than ±0.15% all-in. Life expectancy is 100 million cycles. Control Transducers. Tel., 01234 217704; fax, 01234 217083.

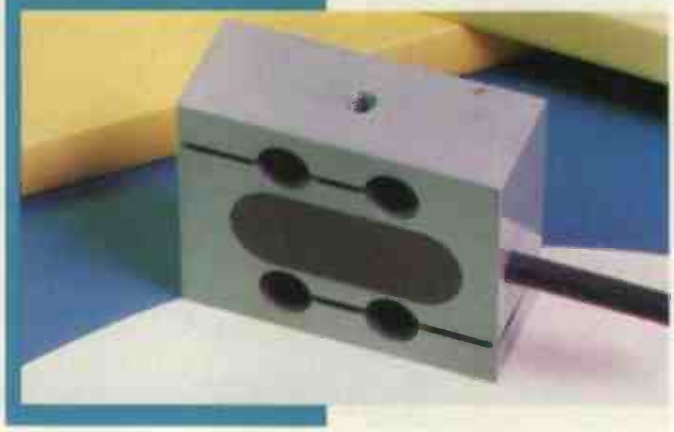

Hardware

Shielded cabinets. Optima's rfi 19in cabinets are based on the *Cabinet* range but now have effective interference shielding. They consist of an aluminium extrusion frame coated with Alochrome in accordance with Defstan 03.18 for environmental protection, as are the skins, which are held in gasketed grooves. Earth bonding is by cable loops and doors close on a beryllium copper gasket. Rf attenuation at 500MHz is –52dB and at 1GHz –43dB.

Stainless steel enclosures. Enclosures in Rittal's new 19in *Electronic Kombi* range come in 3, 6, 9, 12 and 15U heights and 377mm or 477mm depth. Doors are of stainless steel or steel with a 4mm safety glass panel. Protection is to IP55. Rittal Ltd. Tel., 01709 704000; fax, 01709 701217.

Please quote *"Electronics World + Wireless World"* when seeking further information

Copper gaskets. TBA ECP offers low compression-force gasket strips in beryllium copper, designed for those applications in which there is not enough force to compress standard types for emi shielding. A range of gaskets is produced, in clip-on, stick-on and snap-on varieties in a number of different forms. TBA Industrial Products Ltd. Tel., 01706 47422; fax, 01706 46170.

Instrumentation

Digitising oscilloscopes. Hitachi Denshi has renumbered the *VC-7102/7104* as *VC7502/7504*, having introduced what it calls 'glitch capture' into the instruments, with the intention of displaying and measuring 'uncommon phenomena'. The two are 150MHz types with 100Msample/s sampling on two and four channels, 25MHz single-shot and up to 8Kword/channel acquisition and storage. A 512 by 328-dot thermal printer is built in. Sweep time for equivalent sampling is 2ns/division to 0.2μs/division (*7502*) and 2ns/div-0.2s/div (*7504*); in real time: 0.5μs/div-50s/div for the 7502 and 0.5-100s/div for the 7504.

Automatic measurement provides auto setup, and the measurement of four pulse parameters out of 17 simultaneously. A memory allows the display to be saved for up to three months and then output to a pc or colour monitor. Hitachi Denshi (UK) Ltd. Tel., 0181 202 4311; fax, 0181 202 2451.

Four-in-one. From SJ Electronics comes the *MkI Universal Electronics System*, made by a Far Eastern company with input from SJ. The four instruments are a 250MHz frequency counter, a 2MHz function generator, a 4.5-digit multimeter and power supplies, all contained in one case. It has been designed with universities, schools and servicing in mind, being difficult to absent-mindedly remove and only needing one mains supply. The individual instruments are completely separate and possess specifications well up to and possibly beyond those commonly found in workshop equipment at a cost far below that of four different instruments. S.J Electronics Ltd. tel., 01376 562004; fax, 01376 562215.

Interfaces

Dual-line interface. Crystal Semiconductor announces a low-power, dual line interface unit (LIU) for short-haul T1 and E1 telecommunication high-volume applications that require low power and high density. The design includes digital cross connects, T1 and E1 line cards, *SONET* multiplexers and switches. It dissipates 160mW per channel, with a 50% pulse density and both 3.3V and 5V versions of the *CS61584* are available. Designers can now make one board to support all T1 and E1 modes, including DSX-1, DS-1 and CCITT G.703, selecting T1 or E1 operating modes through software without changing transformers or external oscillators. Software-programmable pulse shaping makes it possible to compensate for non-standard line loads, transformers and protection circuits. Each LIU channel contains a line driver, receiver and jitter attenuator. Sequoia Technology Ltd. Tel., 01734 258000; fax, 01734 258020.

Literature

TV spares and more. The 1996 CPC catalogue incorporates over 39,000 products including nearly 10,000 new items. It features spares for tv and video equipment and the latest electronics/mechanical components and accessories. Also added are several new product sections including opto electronics, pcb prototyping, surface mount, motor control and datacomms/networking. Other popular sections, such as computing, security, semiconductors, switches, tools and mains electrical have also been updated and extended. Available free-of-charge to account holders. CPC, tel, 01772 654455, fax 01772 654466.

Automotive components. A short catalogue from *Panasonic* identifies passive and electromechanical components for vehicles, including electronic ignition, fuel injection, climate control and driver information displays. Panasonic Industrial (Europe) Ltd. Tel., 01344 853827; fax, 01344 853313.

Materials

Square-loop cores. Amorphous metal transformer cores for magnetic amplifiers made by AlliedSignal are in cobalt-based alloy for higher frequency operation and very low losses. Cirkit Distribution Ltd. Tel., 01992 444111; fax, 01992 464457.

Conductive adhesive. *TRA-DUCT 2902* is a two-part, silver-epoxy paste adhesive, with no copper or carbon additives, to be used for bonding circuitry, cables and waveguides or for rf and emi shielding. It bonds dissimilar materials such as metals, ceramics, glass and plastic laminates, having a thermal conductivity of 37×10^{-4}cal cm/cm^2/s/°C and volume resistivity of 0.002Ωcm. It cures at room temperature. TRA-CON Inc. Tel., (USA) 001 (617) 391-5550; fax., 001 (617) 391-7380; e-mail, tcepoxy@ aol.com.

Printers and controllers

Printer saver. With a name like *Printoff*, description is almost superfluous. It does as it says: if a computer printer is out of use for a time selectable from 2min to 3h, this device switches it off, bringing it back on line when a print instruction comes from the computer. *Printoff* buffers data during the subsequent printer warm-up time to avoid time-out in the computer. No UK dealers as yet for this Swedish equipment. Utronix Elektronikutveckling AB. Tel., 0046 13 212 750; fax, 0046 13 212 725.

Power supplies

Dc-to-dc converters. Vicor now offers a standard 110V dc nominal input for its *VI-200* and *Mega/Master* dc-to-dc converter modules. With an input range of 66-160V dc, these modules are primarily for applications relying on 110V dc battery power. Component-level *VI-200* converters measure 117 by 61 by 13mm and provide 50-150W. *Mega/Master* modules incorporate one, two or three *VI-200* converters in compact, chassis-mount packages and provide 50-450W. Vicor UK, tel 01276 678222, fax, 01276 681269.

More watts — same case. *F Series* power-factor-corrected power supplies by Unipower have been redesigned using more efficient devices and can now supply up to 1500W; existing types provide 650, 800 and 1000W. Power factor is 0.98 with low harmonics and the units meet EN60555-2, giving universal autoranging. Case sizes are 5 by 5 by 12in and 4 by 4 by 12in and there is a cooling fan. Unipower Europe Ltd. Tel., 01273 420196; fax, 01273 417140.

Remote-sensing regulator. Semtech's *EZ1087* 5A voltage regulator offers remote sensing of the output voltage to compensate for the resistance of wiring and connectors. Features include full power use to 5A of load, current limiting and thermal shutdown, 1.3V dropout, stabilisation 0.015% and regulation 0.1%. Semtech Ltd. Tel., 01592 773520; fax, 01592 774781.

Radio communications products

Low-noise amplifiers. Ranatec's *ACAM-7000* range of high dynamic range, low-noise amplifiers comprises ten models, covering the 2-3200MHz frequency range. Features of the amplifiers include the ability to amplify small signals without distortion in the presence of strong adjacent signals and low noise. The *ACAM-7525*, for example, exhibits a 1.8dB noise figure, 17dB of gain and a third-order intercept point of 40dBm over the 821-851MHz band. *ACAM-7700* models cover 5-4000MHz in seven ranges at a wider bandwidth than the 7500 types and power levels of 110W are offered in the *ACAM-7900* instruments in nine wide-band ranges between 0.1MHz and 2000MHz. Bandwidth of the *7500* models is 60-157MHz in a choice of five centre frequencies. Anglia Microwaves Ltd. Tel., 01277 630000; fax, 01277 631111.

Power amplifiers. *Wood & Douglas* power amplifiers for radio modems and telemetry. They are available for vhf and uhf and give outputs of up to 30W from a 0.5W input. Some have rf-sensed transmit/receive switching for semi-duplex working. All operate from 12Vdc. Wood and Douglas Ltd. Tel., 01734 811444; fax, 01734 811567.

HF security device. An *Analogue Voice Security* device from Harris can be used in a Harris *RF-3200-E* hf radio transmitter-receiver. It is a single board, fitting a slot in the radio and all operation is from the front panel, aided by screen prompts, selection of secure or clear working being by one button. The algorithm, developed by Harris, needs no digital sync. for decoding and the system gives secure communication over the same range as clear voice, also giving tolerance to interfering signal. Coding keys are loaded into a non-volatile memory from a pc or terminal through a rear-panel RS-232 port. Harris Corporation. Tel., 001 716 244-5830.

Emc emission testing. Enhancements to the emc emissions test kits made by Laplace are introduced: a broadband antenna and a Windows-based software package. The *RF200* antenna is a compact, 1.6m design and covers the 30-1000MHz range as required by EN55022 with a flat response, being supplied with antenna factor information to allow its use with any analyser or receiver. Height is adjustable from 0.9m to 1.7m. *EMC-Engineer* software is for use with the *RF-KOx* range of emissions test kits, is compatible with Windows and gives results related to the limits specified by emc standards. Facilities include antenna factor compensation, limit line display, correction for antenna distance, auto-correction for preamplifiers and attenuators, log/lin frequency axis, dBμV or dBm scaling and quasi-peak processing. Laplace Instruments Ltd. Tel., 01692 500777; fax, 01692 406177.

Schottky detectors. Anglia Microwave offers the *ACS Series* of Schottky diode detectors in narrow

Please quote *"Electronics World + Wireless World"* when seeking further information

and broad-band ranges between 10MHz and 26GHz and in three different mechanical forms. Modular, coaxial and bolt channel types are all internally protected against static damage and from video transients. In the coaxial and modular versions, rf impedance can be matched by an adjustment of bias level. Both coaxial and modular types have a K factor of 2300-200, the bolt channel models having K of 2000-1800. Frequency response is flat within ±0.5dB for the narrow-band types and ±1.5dB in the broad-band version. Anglia Microwaves Ltd. Tel., 01277 630000; fax, 01277 631111.

Protection devices

Undervoltage monitor. *ZM33064* by Zetex is an undervoltage monitor to provide the correct initialisation of microprocessors during start-up or when power fails. From 1V to 4.6V, the device output is low and reset is applied to the processor, the same occurring if the line voltage falls below 4.6V during operation, unless the built-in comparator with hysteresis prevents false reset during small line variations. Standby current is 135µA. Zetex plc. Tel., 0161-627 5105; fax, 0161-627 5467.

Switches and relays

Solid-state relays. From Teledyne, the *C60 Series* of solid-state relays are suitable for bidirectional ac or dc switching, a power fet giving a low on resistance and no offset voltage. Switching range of the series is up to 400V and 2A, with surge currents up to 14 times rating being handled. The relays are optically isolated. Teledyne Electronic Technologies. Tel., 0181-571 9596; fax, 1081-571 9637.

Photovoltaic relays. *PVN012* miniature photovoltaic relays by International Rectifier exhibit a lower contact resistance than reed or other mechanical relays at 100mΩ on ac and 40mΩ with dc. They are normally open, single-pole relays with a 4.5A mosfet at the output and draw 5mA, being ttl-compatible. International Rectifier. Tel., 01883 713215; fax, 01883 714234.

Television components

Programmable synthesisers. Universal 1.3GHz frequency synthesisers in the *TSA5521/2/6/7* family by Philips are for use in television receivers or video recorders containing microcontrollers, in which they are programmable via I²C or three-wire buses. They provide the functions for phase-locked loop control of a tuner's local oscillator, including a crystal-controlled reference frequency oscillator and divider and a charge-pump output to give oscillator control voltages up to 33V. Band switching is provided by four open-collector p-n-p drive transistors. *TSA 5520/1* are I²C or three-wire bus write-only types and the 5526/7 also have the I²C bus-read mode to allow status information such as in-lock loop condition to be interrogated. All devices are pin-compatible, so allowing a single board design to accept any of them. Philips Semiconductors (Eindhoven). Tel., 00 31 40 722091; fax, 00 31 40 724825.

Transducers and sensors

Thermometer calibrator. The accuracy of thermometers and sensors can be checked on site, without the need for extra equipment, using the *Hart 9100* hand-held dry-well calibrator. It is simply a small bench-top instrument with a digital temperature readout and holes in the front panel into which temperature probes are inserted. Setting the instrument temperature of the instrument and reading the temperature of the user's thermometer allows a comparison to a resolution of 0.1°C at an accuracy within ±0.5°C. The units possess certificates of calibration. Electronic Temperature Instruments Ltd. Tel., 01903 202151; fax, 01903 202445.

Linear sensor. *Hydrastar* by Control Transducers is a developed version of an earlier model and is designed for use inside pneumatic or hydraulic cylinders. This new range is self-contained, with certificated displacement measurement and three-wire connection. Total length in 2.6in overall and the range covers 0-20mm to 0-610mm to an accuracy within 0.1%. The electronics can be up to 100m away from the sensor and can be specified to give different forms of analogue output. Control Transducers. Tel., 01234 217704; fax, 01234 217083.

Airbag accelerometer. EG&G IC Sensors has introduced a micro-machined silicon accelerometer, the *Model 3255*, for use in car side-impact airbags, which need a greater measurement range than frontal-impact types. Two chips are used for lower cost: the sensor chip and an asic in a multi-layer, hermetically sealed ceramic package for surface-mounting. A feature is the self-test facility, by which an electrical signal simulating the effect of an impact by an electrostatic force is applied, the output signal indicating performance. Eurosensor. Tel., 0171 405 6060; fax, 0171 405 2040.

COMPUTER

Computer board-level products

Passive backplane. *PCA-6105P* is a part of Fairchilds new range of passive backplanes for the PCI bus, featuring a mixture of PCI and ISA slots and keeping full ISA compatibility but allowing PCI cards to avoid bottlenecks such as disk i/o, vga or networks. The cpu card slot conforms to the PICMG configuration, so that it can be used with Fairchild's *Pentium* card or those from other makers. Backplanes with five, seven and thirteen slots are available. Fairchild Ltd. Tel., 01703 559090; fax, 01703 5559100.

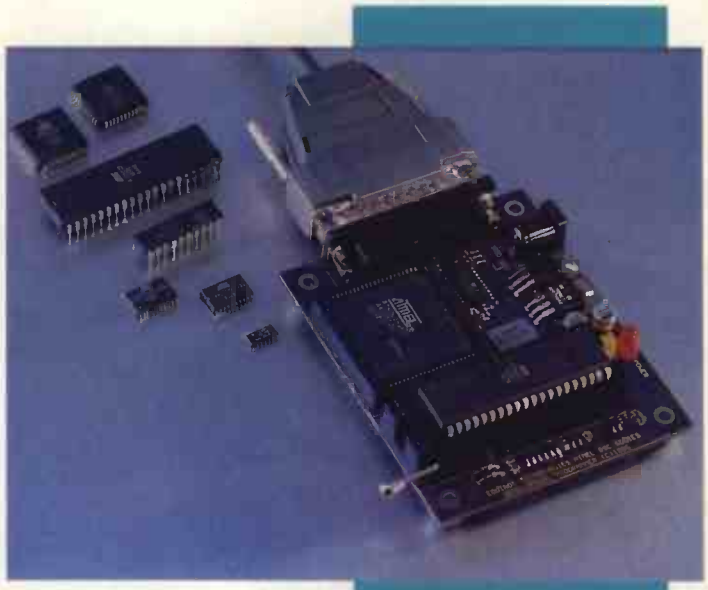

Low cost programming solution. Atmel Micro Pro from Equinox Technologies can program the 40-pin 8951/8952, 20-pin 1051/2051 micros and most serial ee-prom's from Atmel. Intel and Phillips 87C51/52 generic parts are also supported. *Micro Pro* is based on fpga technology rather than utilising a microcontroller. When programming, digital circuitry required for programming the target device is downloaded from the pc into the fpga. This allows hardware to be customised to suit each device, resulting in faster programming times and future device support without the need for expensive adaptors. Equinox is offering an Atmel *Micro Pro* programming system, together with a free Atmel *AT89C1051* and *AT89C2051* microcontrollers for £99+VAT – which includes PSU and parallel cable. Equinox Technologies, Tel 01204 491110, fax, 01204 494883.

Computers

Half-size 486 boards. A range of half-size single-board computers by Iosis has a new member – the *450*, which performs the functions of an industrial computer with a vga display on a half card, and which is ISO 9001-certified. Processors supported include *486DX-25/33* to the 486DX-100, memory being standard 72-pin simms for 1-64Mbyte of dram. An on-board VL-bus vga controller for a flat panel or crt and 1Mb of display memory gives resolution up to 1024 by 769 in 16 colours or 800 by 600 in 256 colours. Iosis. Tel., 0117 9730435; fax, 0117 9237295.

Data acquisition

Acquisition and control cards. IMS has a new series of pc cards for data acquisition and control, the *PCL-818* series. Much of the circuitry being contained in an asic, the plug-in boards are half-sized. The range of cards covers the 40kHz-330kHz sampling frequency range and features include the provision of 16 channels of 12-bit a-to-d conversion, d-to-a conversion, 16 digital inputs and outputs and a counter/timer. All have automatic channel scan and the higher end of the range has a 1Kb fifo to give high throughput for Windows application. There is also a 1000× gain card for low-sensitivity sensors. Integrated Measurement Systems Ltd. Tel., 01703 771143; fax, 01703 704301.

200kHz datacq with 486. *Modular-4* by Sorcus is a low-cost, pc-based data acquisition system having a maximum 12-bit sample rate of 200kHz and the ability to carry out multiple tasks simultaneously and independently of the pc. It comprises a carrier board with a choice of 25-100MHz 486 processors and four slots for interface modules, of which over thirty are available. Up to eight of the boards can be used in a personal computer, each running independent applications. Strategic Test and Measurement Systems Ltd. Tel., 01734 575150; fax, 01734 573730.

Data communications

Packet controller. Radiometrix's *RPC* is a 40kbit/s radio packet controller chip providing processor-intensive, low-level packet formatting and data-recovery functions for high-speed, bidirectional data links and networks. It is optimised for use with the *BiM* radio transceiver, simplifying system design and allowing the realisation of the entire 40kbit/s bandwidth and 120m range at either 418MHz for the UK or 433MHz in Europe. Interfacing requires a four-line interface to the host processor and another to the transceiver, the host interface being fully asynchronous and driven by an i/o port from the host. When transmitting, the host writes a 27byte packet to the *RPC* transmit buffer, where a preamble is added, together with a start byte and error-check code. The whole is then encoded for security and mark/space balance. In receive mode, the *RPC* monitors the line from

Please quote *"Electronics World + Wireless World"* when seeking further information

the transceiver for a valid preamble, performs synchronisation and validation and tells the host to accept data. Low Power Radio Solutions Ltd. Tel., 01993 709418; fax, 01993 708575.

SocketModems. Rockwell's *SocketModem* concept enables addition of full data, fax and voice communications to a multitude of electronic designs. Packages are pin-compatible 25.4mm by 63.5mm pin dual-in-line modules, and require only an external eprom and DAA line interface. Due to their compact size and low power consumption – 45mW to 790mW – they suit anything from remote telemetry via cellular networks to motherboard integration, freeing a valuable expansion slot.
The SocketModem range extends from 2400bps data-only devices to 28,800bps data/fax modems supporting high-speed fax, voice functions, error correction, data compression and cellular protocols. Standards supported include V.34, V.32bis, V.32, V.22bis, V.22, V.23 and V.21, plus Bell 212 and Bell 103. Also supported are, MNP 2-4 and V.42 error correction, MNP-5 and V.42bis data compression, and MNP-10 cellular protocols. Both EIA/TIA class 1 and class 2 fax are possible. High-speed group 3 fax capabilities are available, compliant with CCITT, V.17, V.29, V.27ter and V.21. Voice capabilities include voice, business audio, ADPCM2 and 4bit compression and decompression, with silence deletion and interpolation. TDC Ltd, tel, 01256 332800, fax 01256 332810.

Development and evaluation

Can development. Hitex has a development board to ease the first stages in the development of a controller area network (can). It is fitted with two can nodes controlled by one microcontroller, network drivers being developed on the one microcontrollers and all communications being looped back between controllers. By this means, a can network is developed using normal tools and with no need for bus analysers, although a simple analyser comes with the demo code to allow monitoring of the final network. The board is either on its own or part of a kit containing C compiler, assembler *Hitop* monitor and demo code. Hitex (UK) Ltd. Tel., 01203 692066; fax, 01203 692131.

Prototype board for rf. Rapid building, evaluation and fault-finding of moderately complex analogue and digital circuits working to beyond 300MHz is facilitated by the new *HFP* prototyping board. RF prototyping boards already exist but they tend to use socketed components and can hence suffer from intermittent connections. The board accommodates 4 by 8 pin or 2 by 16 pin dil packages. It also features two easily decoupled power supply bus lines, large area ground plane on the top side and four BNC connectors with provisions for eight. Oxtek Ltd, tel and fax, 01865 200767.

Programming hardware

Production programmer. From Data I/O, the *AutoSite* production programmer for automated handling systems now has new features and supports new devices from Altera, AMD, Intel, Lattice, Microchip and Xilinx. Its memory editor and swap data operations now support 32-bit mode and the system handles use of Jedec U data and E fields. Data I/O Ltd. Tel., 01734 440011; fax, 01734 448700.

Software

Message pagers. Hexatec has extended its Windows-based *SCAN1000* supervisory and data acquisition system to allow text messages to be transmitted automatically to standard commercial radio pagers. Each supervisory system equipped with *SCAN1000* monitors up to 3000 channels, compares the data to defined criteria and sends the appropriate messages to field operators over the Mercury network. Software has independent data-logging facilities for large numbers of asynchronous processes, running under Windows, NT and Workgroups, also being compliant with Windows 95 standards. No programming is needed. Hexatec Ltd. Tel., 01434 605575; fax, 01434 607800.

Ups power management. From Fiskars, 32-bit power management packages for Windows NT and other operating systems. *LanSafe III* and *FailSafe III* provide uninterruptible power supply remote management, power graphics, and data-saving shutdown in *Windows NT 3.5*. Even when data has not been saved, the software saves it and shuts down in a graceful manner. LanSafe controls any ups from any node in a network, shutting down and rebooting any intelligent component, graphic information from every protected device being available. Failsafe is a similar facility for single pcs. Fiskars Electronics Ltd. Tel., 01734 306600; fax, 01734 305868. ■

Measure & Record Temperature on your PC.

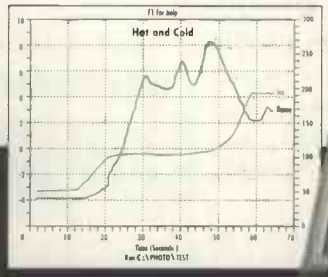

PicoLog Advanced data logging software.
Samples can be taken every second or as slow as one per hour and displayed in real time.

Pico's *NEW* TC-08 is a 8 channel thermocouple to PC converter. Supplied with PicoLog datalogging software it is designed to allow simple yet accurate temperature recording onto a computer.

TC-08 has provision for up to 8 thermocouples -B,E,J,K,R,S and T types. For type K the resolution over -270°C to +1300°C is better than 0.1°C and accurate to ±0.1°C.

NEW from Pico TC-08 £ 199.00

complete with PicoLog, software drivers and connecting cable. A range of thermocouple probes is available.

Call for your Guide on 'Virtual Instrumentation' and Release your PC Potential.

pico Technology Limited

Pico Technology Ltd. Broadway House, 149-151 St Neots Rd, Hardwick, Cambridge. CB3 7QJ UK.
Tel: 01954 - 211716 Fax: 01954 - 211880

Phone or FAX for sales, ordering information, data sheets, technical support. All prices exclusive of VAT. Carriage Overseas £9

CIRCLE NO. 148 ON REPLY CARD

Finally an upgradeable PCB CAD system to suit any budget ...

BoardCapture

BoardCapture - Schematic Capture

- Direct netlist link to BoardMaker2
- Forward annotation with part values
- Full undo/redo facility (50 operations)
- Single-sheet, multi-paged and hierarchical designs
- Smooth scrolling
- Intelligent wires (automatic junctions)
- Dynamic connectivity information
- Automatic on-line annotation
- Integrated on-the-fly library editor
- Context sensitive editing
- Extensive component-based power control
- Back annotation from BoardMaker2

£395

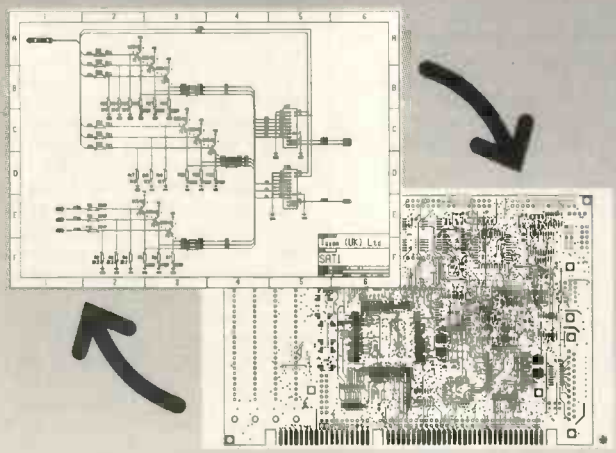

BoardMaker

BoardMaker1 - Entry level

- PCB and schematic drafting
- Easy and intuitive to use
- Surface mount support
- 90, 45 and curved track corners
- Ground plane fill
- Copper highlight and clearance checking

£95

BoardMaker2 - Advanced level

- All the features of BoardMaker1 plus
- Full netlist support - OrCad, Schema, Tango, CadStar
- Full Design Rule Checking - mechanical & electrical
- Top down modification from the schematic
- Component renumber with back annotation
- Report generator - Database ASCII, BOM
- Thermal power plane support with full DRC

£395

BoardRouter

BoardRouter - Gridless autorouter

£200

- Simultaneous multi-layer routing
- SMD and analogue support
- Full interrupt, resume, pan and zoom while routing

Output drivers - Included as standard

- Printers - 9 & 24 pin Dot matrix, HPLaserjet and PostScript
- Penplotters - HP, Graphtec, Roland & Houston
- Photoplotters - All Gerber 3X00 and 4X00
- Excellon NC Drill / Annotated drill drawings (BM2)

Contact Tsien for further information on
Tel 01354 695959
Fax 01354 695957

tsien

All trademarks acknowledged

Tsien (UK) Ltd Aylesby House Wenny Road Chatteris Cambridge PE16 6UT

AWV7:10-30

CIRCLE NO. 149 ON REPLY CARD

SuperFILTER synthesizes Active, Passive and Digital FIR\IIR filters and ports to *SpiceAge for Windows*™ for a complete analysis.

Those Engineers Ltd

***Super FILTER* Version 3 for Windows provides the following features.**

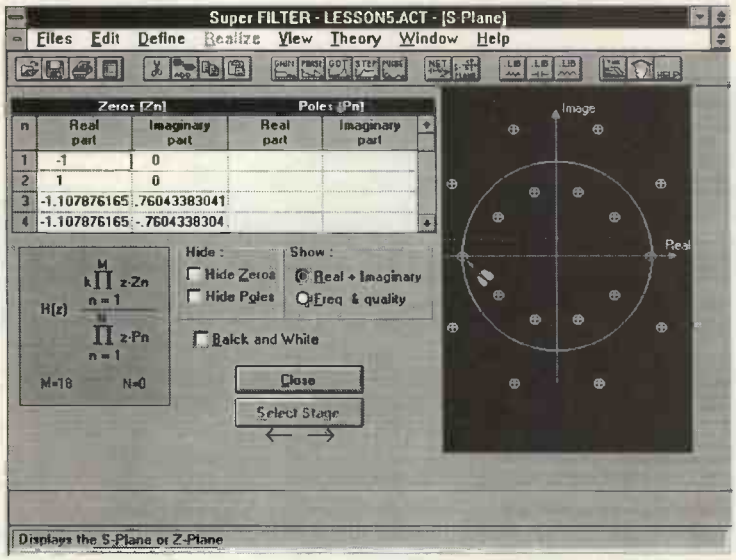

1. Choice of specifying parameters for desired response includes gain & phase coordinates, graphical (mouse tracing response), poles and zeroes in S and Z planes and Laplace transfer function coordinates.
2. No order limits of cascaded filters - applies to digital, active and passive types.
3. Types available include Butterworth, Chebyshev, Elliptic, Bessel, Realpole, Gaussian, Linear phase, Inverse Chebyshev, Digital Hilbert FIR, Differentiator, Raised cosine, Squared root raised cosine of LPF, HPF, BPF, APF, Notch filters.
4. Minimum specification of suitable op amps for achieving active filter performance.
5. Analysis of components' sensitivity using Monte Carlo method for analogue filters.
6. Analysis of effect of register characteristics on digital filters and D to A converters.
7. Analysis of inductor losses for passive filters.
8. Defining digital FIR filters by gain using the Remez Exchange algorithm.
9. Supports behavioural modelling within SpiceAge for Windows synthesizing more than 150 topologies
10. Graphic display of the realized versus the ideal filter with best fit options taken from a comprehensive (and user controllable) library of preferred component values.

"This is a stunning program that will save and save again."

For further details and demonstation disk, contact Those Engineers Ltd, 31 Birkbeck Road, LONDON NW7 4BP.
Tel 0181-906 0155, FAX 0181-906 0969, CompuServe 100550, 2455.

CIRCLE NO. 150 ON REPLY CARD

What's the *difference?*

When choosing a differential amplifier, most people opt for the single op-amp configuration. Steve Winder argues that little consideration is given to how this choice copes with signals presented to it, and sets out to explain the benefits to be gained from a little more thought.

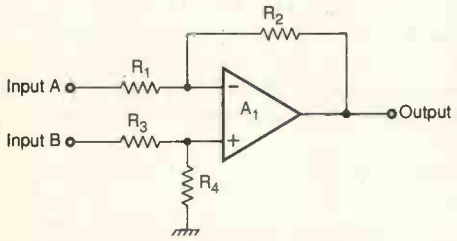

Fig. 1. This circuit has equal impedance into input A and B for common mode signals – but not for differential signals. Consequently, transmission lines may be unbalanced.

Low-amplitude signals, such as those from remote sensors, are normally carried on a twisted pair line. This is also the preferred transmission medium when the signal source and signal processing equipment do not have the same dedicated earth or common connection. In these situations, noise from earth or other circulating currents can be greater than the signal itself, so using a single wire with a common return path is not a viable option.

Where a signal is transmitted over a twisted or screened-pair line, a balanced line termination is required. This could be provided by a transformer, or by amplifiers having a differential input and a single ended output. Unwanted common mode signals may be present on the wires ie signals that are in phase and present on both wires relative to earth.

If a transformer is terminating the line, common mode signals can be reduced considerably by providing an earthed metal-foil screen between the coil windings. Common-mode signals are capacitively coupled to earth by this screen.

The foil screen must be insulated so that, when wrapped around the primary winding, it does not form a short circuited turn. This occurs if the end of the foil screen is in metallic contact with its beginning.

If a differential input amplifier is terminating the line, the amplifier's design can be critical in determining the common mode rejection. The input impedance under both differential and common-mode signal conditions must be considered.

If the amplifier has an unbalanced input impedance, the twisted-pair line becomes unbalanced and susceptible to external fields. The input impedance should also be equal to the characteristic impedance of the line.

Single op-amp differential amplifier

The simplest design uses a single op-amp, **Fig. 1**. Gain of this circuit is unity if all four resistors have the same value. Generally R_1=R_3 and R_2=R_4, and the gain can be found by R_2/R_1 or equivalently R_4/R_3.

This design has several shortcomings, particularly in terms of input impedance. Suppose that all four resistors are equal, at, say, 1kΩ each. A signal at input B will 'see' a 2kΩ impedance because the non-inverting input of the op-amp presents a high impedance and the only load is the two resistors R_3 and R_4 in series. Impedance seen at input A will depend on the signal at B because feedback forces the op-amp to maintain an equal voltage at both its inverting and non-inverting inputs.

Suppose that at a certain moment a signal with an amplitude of 1V is present at input B. Potential divider action of R_3 and R_4, means that the potential at the op-amp's non-inverting input is 0.5V. The op-amp will therefore try to keep the inverting input at this same potential.

Now, if a common-mode signal of the same amplitude is applied at input A, the potential across R_1 will be equal to the input voltage minus the inverting input voltage, 1V–0.5V, which is 0.5V. Thus the potential across R_1 is equal to the potential across R_3 and the two input impedance's are equal. Also, since R_2 has the same resistance as R_1 it too must have a 0.5V drop. Output voltage will be zero.

Suppose now that a differential signal is applied between the two inputs A and B. At a certain moment the potential on input A is 1V and on input B it is –1V. As before, the op-amp's non-inverting input will have a –0.5V potential on it and the op-amp will maintain a –0.5V potential on its inverting input. This time, however, the potential across R_1 will be –1.5V, ie –1V–0.5V.

Now the potential across R_1 is three times that of R_3, so the current will also be three times as great. Voltage drop across R_2 must also be 1.5V, since the current flowing through it is the same as the current through R_1. The inverting input of the op-amp is at 0.5V, so the output must be 0.5V+1.5V, or

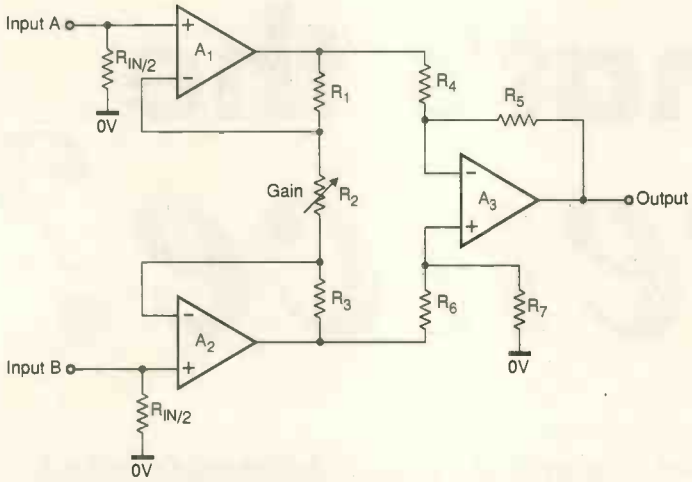

Fig. 2. This amplifier has the correct input impedance, rejects common-mode signals and has its gain set by a single resistor. This method of gain adjustment makes the design ideal for instrumentation amplifiers.

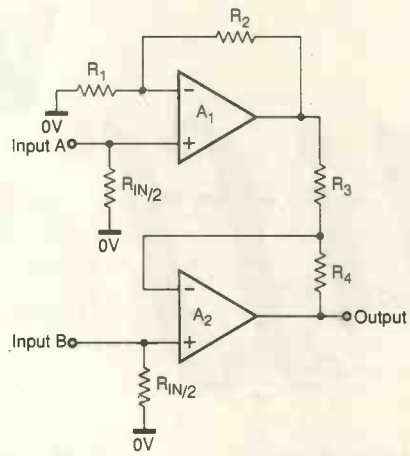

Fig. 3. Output from this circuit is zero when common mode signals are applied. This option has a gain of $(R_1+R_2)/R_2$ for differential signals. Matched pairs of resistors are required.

2V, confirming the circuit's unity gain.

The effective input impedance will be $^2/_3$ of R_1 at input A and $2\times R_1$ at B. In total, the input impedance at B is three times that of A if R_1 and R_3 have the same value. This circuit, using equal valued resistors, works well provided it is driven from a low impedance source. When used to terminate a transmission line, the source impedance is finite and impedance mismatch between the inputs makes it susceptible to noise pick-up.

An alternative differential amplifier

An alternative circuit, presented by Geoff Pomeroy in Electronic Design 16 Dec 1995, suggested that by making the values of R_1 and R_3 different, the impedance into input A and B can be equal. Gain, G, and desired input impedance, Z, can be used to find the values of resistors $R_{1\text{-}4}$,

$$R_1=0.5Z(G/(G+1)+1)$$
$$R_2=G\times R_1$$
$$R_3=Z-R_1$$
$$R_4=R_1-0.5Z$$

In fact, for a unity-gain amplifier, $R_{1,2}$ are equal and three times the value of $R_{3,4}$. If $R_{1,2}$ have a value of 450Ω and $R_{3,4}$ have a value of 150Ω, the input impedance for differential signals is 600Ω, or 300Ω relative to the common rail at each input. This factor of three tallies with analysis of the previous circuit design.

Now consider a circuit with a gain of one. Suppose a differential signal is applied between inputs A and B. At a particular moment the potential at A is 1V, and at B it is –1V.

The op-amp's non-inverting input will have a potential of –0.5V, forcing the non-inverting input to follow it. The remaining 0.5V is dropped across R_3. The voltage across R_1 will then be 1–(–0.5)=1.5V, or three times that across R_3. Voltage across R_2 will also be 1.5V, because the same current flows through $R_{1,2}$. When the voltage across R_2 is added to the inverting input potential, this gives an output of 2V. However, R_1 has a resistance of three times that of R_3, so the currents flowing through inputs A and B are equal in magnitude and are of opposite sign. The input impedances are therefore equal.

If a common-mode signal is applied to inputs A and B, having a potential of 1V at a particular moment, the voltage at the op-amp's non-inverting input will be 0.5V, leaving 0.5V across R_3. The potential at the op-amp's inverting input will be forced to 0.5V via feedback. At input A, the potential is also 1V, giving a potential across R_1 of 0.5V.

Voltage over R_2 will also be 0.5V, which when subtracted from the potential at the op-amp's inverting input gives an output voltage of zero. Impedance into input A will be three times that of B. This is because the current through R_1 will be one third of the current through R_3 since its resistance is three times greater. Common-mode signals from an isolated signal source, say capacitively coupled, are generally high impedance, in which case differing input impedance's will have some effect on circuit performance.

This circuit has the correct balanced input for differential signals, with the correct termination impedance. However, the common mode impedance is different for each input.

Instrumentation amplifier

Figure 2 shows a triple op-amp differential amplifier. The output stage uses the same circuit as Fig. 1 with the four resistors $R_{4\text{-}7}$ usually having the same resistance value. Because this stage is driven by two op-amps, $A_{1,2}$, which have a low output impedance, so the impedance looking into the output stage has no effect.

The two input stages are symmetrical. Input impedance at both the op-amp non-inverting inputs is high. Inputs A and B have an impedance set by resistors $R_{in}/2$ in Fig. 2. Resistor chain $R_{1\text{-}3}$ is symmetrical and sets the gain of the input stages. A single variable resistor R_2 controls gain.

Consider that a common-mode signal is applied to inputs A and B with a potential at a particular moment of 1V. This voltage will be present at the op-amp non-inverting inputs, with feedback forcing the inverting inputs also to 1V. Since R_2 has an equal potential on either side, no current flows through it. There can be no current flowing through $R_{1,2}$ either, since there is nowhere for it to go. Output voltage from $A_{1,2}$ must be equal to the input voltage. As discussed earlier, common-mode signals are then rejected by the output stage.

Differential signals can be amplified by the input stages. Suppose the voltage at input A is 1V and voltage at input B is –1V. Also, let R_1 equal R_2 and R_3. The inverting input of A_1 will be at a potential of 1V, due to feedback. Also, the potential at the inverting input of A_2 will be at –1V, equal to the potential at the non-inverting input.

Voltage across R_2 will be 2V, since it is connected between the inverting inputs of $A_{1,2}$. There must also be 2V across each of R_1 and R_3 since the same current is flowing through them as through R_2. The output of A_1 must be 3V and the output of A_2 must be –3V. The amplifier will produce 6V from a differential

signal of 2V – overall gain is therefore three.

Gain of a differential amplifier can be calculated from a simple single stage gain. Resistor R_2 has the differential potential across it, but differential signals are symmetrical about the 0V rail, ie the centre of R_2 is always at 0V. In fact R_2 can be considered as two series connected resistors, each having half the value of R_2, with their common point joined to the 0V rail.

Consider amplifier A_1. Its feedback is R_1 with half of R_2 connected to 0V. Gain of such an amplifier is $1+R_1/(0.5\times R_2)$, which is 3. Performance of amplifier A_2 is identical.

Dual op-amp differential amplifier

Figure 3 shows a dual op-amp differential amplifier. Inputs A and B are connected to the non-inverting inputs of op-amps $A_{1,2}$, which have a high input impedance. Impedance into input A and B is therefore set by resistors of value $R_{in}/2$.

In the dual op-amp circuit R_1 and R_4 have equal values as do R_2 and R_3. Circuit gain is calculated using $(R_1+R_2)/R_2$. Suppose R_1 is three times R_2, then the circuit gain is four.

Let a common-mode signal be applied to inputs A and B with a potential at a particular moment of 1V. The voltage present at both the op-amp non-inverting inputs will be 1V.

Feedback forces both the inverting inputs to a potential of 1V. This means that 1V will appear across R_1, and hence one third of a volt across R_2. This occurs because the same current is flowing through each resistor and the value of R_2 is a third that of R_1. Output potential of A_1 will be 1.333V.

Potential across R_3 is the output of A_1 minus the potential at the inverting input of A_2. As a result, R_3 has 0.333V across it. Now, the current through R_3 is the same as R_4, but R_4 has three times the resistance, so the voltage across R_4 is 1V. Resistor R_4 is connected between the inverting input of A_2 and the output terminal. Since the potential at the inverting input of A_2 is 1V, the voltage at the output terminal must be zero in order to produce 1V across R_4.

Suppose at a particular moment a differential signal produces 1V at input A and –1V at B. The output of A_1 will be the same as in the common-mode case, 1.333V. A –1V signal at B produces a potential of –1V at the non-inverting input of A_2. Feedback also forces the inverting input of A_2 to –1V.

Resistor R_3 now has 2.333V across it, ie 1.333V present at the output of A_1 and –1V present at the inverting input of A_2. Since R_4 has the same current flowing through it as R_3, but with three times the resistance, there is 7V across R_4. The inverting input of A_2 has a potential of –1V, so the output must have a potential of –8V.

Conclusion

This article has shown that single op-amp differential amplifiers of either design has shortcomings that can be overcome by more sophisticated designs using two or three op-amps. The dual op-amp design, considered last, requires two resistors and one op-amp more than the simplest design. Increased cost is usually worthwhile, and by using a dual op-amp package the overall increase in board space requirement is minimal.

Where gain adjustment is essential, the instrumentation amplifier using three op-amps provides the best option. ■

SOFT INDEX ON DISK

A computerised index of *Electronics World+Wireless World* magazine is now available. It covers the five years 1990 to 1994 – volumes 96 to 100 – and contains over 1400 references to feature articles, circuit ideas and applications, with a synopsis for each. The software is easy to use and very quick. It runs on any IBM or compatible PC with 512K ram and a hard disk. Each disk is scanned before shipping with the current version of Dr Solomon's Anti-Virus Toolkit.

For the UK, the five year index is priced at £20. Please specify $5^1/_4$ or $3^1/_2$in format. This price includes UK postage and VAT. Add an extra £1 for overseas EC orders or £5 for non-EC overseas orders.

Photo copies from back issues of *EW+WW* are available at 50p per page plus VAT (in EC) and a flat postage charge of 50p (UK), £1 (rest of EC), and £2 (rest of world). For enquiries about photo copies send an sae to Video Interface Products.

Please allow up to 28 days for delivery. Cheques should be made payable to **Video Interface Products,** not *EW&WW* or Reed Business Publishing.

Please post your request to **Video Interface Products Ltd, 1 Vineries Close, Cheltenham GL53 0NU, UK.**

BULL CLEAROUT SALE

WIRELESS VIDEO BUG KIT Transmits video and audio signals from a minature CCTV camera (included) to any standard television! All the components including a PP3 battery will fit into a cigarette packet with the lens requiring a hole about 3mm diameter. Supplied with telescopic aerial but a piece of wire about 4" long will still give a range of up to 100 metres. A single PP3 will probably give less than 1 hours operating time. £99 REF EP79. (probably not licensable!)

GOT AN EXPENSIVE BIKE? You need one of our bottle alarms, they look like a standard water bottle, but open the top, insert a key to activate a motion sensor alarm built inside. Fits all standard bottle carriers, supplied with two keys. SALE PRICE £7.99 REF SA32.

GOT AN EXPENSIVE ANYTHING? You need one of our cased vibration alarms, keyswitch operated, fully cased just fit it to anything from videos to caravans, provides a years protection from 1 PP3 battery, UK made. SALE PRICE £4.99 REF SA33.

DAMAGED ANSWER PHONES These are probably beyond repair so they are just £4.99 each. Mainly response 200 machines. REF SA30.

COMMODORE GAMES CONSOLES Just a few of these left to clear at £5 ref SA31. Condition unknown.

COMPUTER DISC CLEAROUT We are left with a lot of software packs that need clearing so we are selling at disc value only! 50 discs for £4, thats just 8p each!!(our choice of discs) SALE PRICE £4 ref EP66

IBM PS2 MODEL 160Z CASE AND POWER SUPPLY Complete with fan etc and 200 watt power supply. SALE PRICE £9.95 ref EP67

DELL PC POWER SUPPLIES 145 watt, +5,-5,+12,-12, 150x150x85mm complete with switch, flyleads and IEC socket. SALE PRICE £9.99 ref EP55

1.44 DISC DRIVES Standard PC 3.5" drives but returns so they will need attention SALE PRICE £4.99 ref EP68

1.2 DISC DRIVES Standard 5.25" drives but returns so they will need attention SALE PRICE £4.99 ref EP69

PP3 NICADS New and unused but some storage marks. SALE PRICE £4.99 ref EP52

SOLAR PANELS 3v output with two flyleads, 100x60 mm pack of 10 SALE PRICE £6.99 ref EP56

DELL PC POWER SUPPLIES (Customer returns) Standard PC psu's complete with fly leads, case and fan, pack of two psus SALE PRICE £5 FOR TWO!! ref EP61

GAS HOBS AND OVENS Brand new gas appliances, perfect for small flats etc. Basic 3 burner hob SALE PRICE £24.99 ref EP72. Basic small built in oven SALE PRICE £79 ref EP73

BITS AND BOBS We have a quantity of cased modems, multiplexers etc different specs but ideal strippers. SALE PRICE £4 each ref EP63

RED EYE SECURITY PROTECTOR 1,000 watt outdoor PIR switch SALE PRICE £9.99 ref EP57

ENERGY BANK KIT 100 6"x6" 6v 100mA panels, 100 diodes, connection details etc. £69.95 ref EF112.

CCTV CAMERA MODULES 46X70X29mm, 30 grams, 12v 100mA, auto electronic shutter, 3.6mm F2 lens, CCIR, 512x492 pixels, video output is 1v p-p (75 ohm). Works directly into a scart or video input on a tv or video. IR sensitive. £79.95 ref EF137.

IR LAMP KIT Suitable for the above camera enables the camera to be used in total darkness! £5.99 ref EF138.

PASTEL ACCOUNTS SOFTWARE, does everything for all sizes of businesses, includes wordprocessor, report writer, windowing, networkable up to 10 stations, multiple cash books etc. 200 page comprehensive manual. 90 days free technical support (0345-326009 try before you buy!) Current retail price is £129, SALE PRICE £9.95 ref SA12: SAVE £120!!!

MINI MICRO FANS 12V 1.5" sq SALE PRICE £2. Ref SA13.

REUSEABLE HEAT PACKS. Ideal for fishermen, outdoor enthusiasts elderly or infirm, warming food, drinks etc, defrosting pipes etc.reuseable up to 10 times, lasts for up to 8 hours per go, 2,000wh energy, gets up to 90 degC. SALE PRICE £9.95 REF SA29

12V 2AMP LAPTOP psu's 110x55x40mm (includes standard IEC socket) and 2m lead with plug. 100-240v IP. SALE PRICE £6.99 REF SA15.

PC CONTROLLED 4 CHANNEL TIMER Control (on/off times etc) up to 4 items (8A 240v each) with this kit. Complete with Software, relays, PCB etc. £25.99 Ref 95/26

COMPLETE PC 300 WATT UPS SYSTEM Top of the range UPS system providing protection for your computer system and valuable software against mains power fluctuations and cuts.New and boxed, UK made Provides up to 5 mins running time in the event of complete power failure to allow you to run your system down correctly. SALE PRICE just £89.00.

SOLAR PATH LIGHTS Low energy walklights powered by the sun! built in PIR so they work when you walk past. Includes solar panel & rechargeable bat. SALE PRICE £19.9REF EP62

BIG BROTHER PSU Cased PSU, 6v 2A output, 2m o/p lead, 1.5m input lead, UK made,220v. SALE PRICE £4.99 REF EP7

WANT TO MAKE SOME MONEY? STUCK FOR AN IDEA? We have collated 140 business manuals that give you information on setting up different businesses, you peruse these at your leisure using the text editor on your PC. Also included is a certificate enabling you to reproduce the manuals as much as you like! SALE PRICE £14 REF EP74

RACAL MODEM BONANZA! 1 Racal MPS1223 1200/75 modem, telephone lead, mains lead, manual and comms software, the cheapest way onto the net! all this for just £13 ref DEC13.

5mw LASER POINTER. Supplied in kit form, complete with power adjuster, 1-5mw, and beam divergence adjuster. Runs on 2 AAA batteries. Produces thin red beam ideal for levels, gun sights, experiments etc. Cheapest in the UK! just £39.95 ref DEC49 TRADE PRICE £28 MIN 10 PIECES

RADIO PAGERS Brand new, UK made pocket pagers clearance price is just £4.99 each 100x40x15mm packed with bits! Ref SEP5.

BULL TENS UNIT Fully built and tested TENS (Transcutaneous Electrical Nerve Stimulation) unit, complete with electrodes and full instructions. TENS is used for the relief of pain etc in up to 70% of sufferers. Drug free pain relief, safe and easy to use, can be used in conjunction with analgesics etc. £49 Ref TEN/1

COMPUTER RS232 TERMINALS. (LIBERTY) Excellent quality modern units,(like wyse 50,s) 2xRS232, 20 function keys, 50 thro to 38,400 baud, menu driven port, screen, cursor, and keyboard setup menus (18 menu's). £29 REF NOV4.

PC PAL VGA TO TV CONVERTER Converts a colour TV into a basic VGA screen. Complete with built in psu, lead and s/ware.. Ideal for laptops or a cheap upgrade.Supplied in kit form for home assembly. SALE PRICE £25 REF SA34

EMERGENCY LIGHTING UNIT Complete unit with 2 double bulb floodlights, built in charger and auto switch. Fully cased. 6v 8AH lead acid req'd. (secondhand) £4 ref MAG4P11.

SWINGFIRE GUIDED MISSILE WIRE. 4,200 metre reel of ultra thin 4 core insulated cable, 28lbs breaking strain, less than 1mm thick! Ideal alarms, intercoms, fishing, dolls house's etc. SALE PRICE £13.99 ref EP51

ELECTRIC CAR WINDOW DE-ICERS Complete with cable, plug etc SALE PRICE JUST £4.99 REF SA28

ASTEC SWITCHED MODE PSU BM41012 Gives +5 @ 3.75A, +12@1.5A, -12@.4A. 230/110, cased, BM41012. £5.99 ref AUG6P3.

AUTO SUNCHARGER 155x300mm solar panel with diode and 3 metre lead fitted with a cigar plug. 12v 2watt. SALE PRICE £8.99 REF SA25.

TOP QUALITY CENTRIFUGAL MAINS MOTORS SALE PRICE2 FOR JUST £2.50 REF SA38

ECLATRON FLASH TUBE As used in police car flashing lights etc, full spec supplied, 60-100 flashes a min. SALE PRICE £6.99 REF SA15.

24v AC 96WATT Cased power supply. New. SALE PRICE JUST £9.99 REF SA40

MILITARY SPEC GEIGER COUNTERS Unused anstraightfrom Her majesty's forces. SALE PRICE £44 REF SA16

MICRODRIVE STRIPPERS Small cased tape drives ideal for stripping, lots of useful goodies including a smart case, and lots of components. SALE PRICE JUST £4.99 FOR FIVE REF SA26

SOLAR POWER LAB SPECIAL You get TWO 6"x6" 6v 130mA solar cells, 4 LED's, wire, buzzer, switch plus 1 relay or motor.Superb value kit SALE PRICE JUST £4.99 REF SA27

RGB/CGA/EGA/TTL COLOUR MONITORS 12" in good condition. Back anodised metal case. SALE PRICE £49 REF SA16

SWITCHED MODE PSU ex equip, 60w +5v @5A, -5v@.5A, +12v@2A,-12v@.5A 120/220v cased 245x88x55mm IECinput socket £6.99 REF MAG7P1

PLUG IN ACORN PSU 19v AC 14w , £2.99 REF MAG3P10

POWER SUPPLY fully cased with mains and o/p leads 17v DC 900mA output. Bargain price £5.99 ref MAG6P9

ACORN ARCHIMEDES PSU +5v @ 4.4A. on/off sw uncased, selectable mains input, 145x100x45mm SALE PRICE £4.99 REF SA1

13.8V 1.9A psu cased with leads. Just £9.99 REF MAG10P3

PPC MODEM CARDS. These are high spec plug in cards made for the Amstrad laptop computers. 2400 baud dial up unit complete with leads. Clearance price is £5 REF: MAG5P1

200 WATT INVERTER Converts 10-15v DC into either 110v or 240v AC. Fully cased 115x36x156mm, complete with heavy dutypower lead, cigar plug, AC outlet socket. Auto overload shutdown, auto short circuit shut down, auto input over voltage shutdown, auto input under voltage shut down (with audible alarm), auto temp control, unit shuts down if overheated and sounds audible alarm. Fused reversed polarity protected. output frequency within 2%, voltage within 10%. A well built unit at an keen price. Just £64.99 ref AUG65.

UNIVERSAL SPEED CONTROLLER KIT Designed by us for the C5 motor but ok for any 12v motor up to 30A. Complete with PCB etc. A heat sink may be required. £17.00 REF: MAG17

COMPUTER COMMUNICATIONS PACK Kit contains 100m of 6 core cable, 100 cable clips, 2 line drivers with RS232 interfaces and all connectors etc. Ideal low cost method of communicating between PC's over a long distance. Complete kit £8.99.

ELECTRIC MOTOR KIT Comprehensive educational kit includes all you need to build an electric motor. £9.99 ref MAR10P4.

VIEWDATA SYSTEMS made by Phillips, complete with internal 1200/75 modem, keyboard, psu etc RGB and composite outputs, menu driven, autodialler etc. SALE PRICE £12.99 REF SA18

AIR RIFLES .22 As used by the Chinese army for training puposes, so there is a lot about! £39.95 Ref EF78. 500 pellets £4.50 ref EF80.

PLUG IN POWER SUPPLY SALE FROM £1.50 Plugs in to 13A socket with output lead. three types available, 9vdc 150mA £1.50 ref SA19, 9vdc 200mA £2.00 ref SA20, 6.5vdc 500mA £2 ref SA21.

VIDEO SENDER UNIT. Transmits both audio and video signals from either a video camera, video recorder, TV or Computer etc to any standard TV set in a 100' range! (tune TV to a spare channel) 12v DC op. Price is £15 REF: MAG15 12v psu is £5 extra REF: MAG5P2

*SOME OF OUR PRODUCTS MAY BE UNLICENSABLE IN THE UK

***FM CORDLESS MICROPHONE** Small hand held unit with a 500' range! 2 transmit power levels. Reqs PP3 9v battery. Tuneable to any FM receiver. Price is £15 REF: MAG15P1

***MINATURE RADIO TRANSCEIVERS** A pair of walkie talkies with a range up to 2km in open country. Units measure 22x52x155mm. Including cases and earp'ces. 2xPP3 req'd. £30.00 pr.REF: MAG30

FUTURE PC POWER SUPPLIES These are 295x135x60mm, 4 drive connectors 1 mother board connector. 150watt, 12v fan, iec inlet and on/off switch. SALE PRICE £7.99 REF SA 22

***FM TRANSMITTER KIT** housed in a standard working 13A adapter!! the bug runs directly off the mains so lasts forever! why pay £700? or price is £15 REF: EF62 Transmits to any FM radio. (this is in kit form with full instructions.)

***FM BUG BUILT AND TESTED** superior design to kit. Supplied to detective agencies. 9v battery req'd. £14 REF: MAG14

TALKING COINBOX STRIPPER COMPLETE WITH COINSLOT MECHANISMS originally made to retail at £79 each, these units are designed to convert an ordinary phone into a payphone. The units have the locks missing and sometimes broken hinges. However they can be adapted for their original use or used for something else?? SALE PRICE JUST £2.50 REF SA23

GAT AIR PISTOL PACK Complete with pistol, darts and pellets £12.95 Ref EF82 extra pellets (500) £4.50 ref EF80.

6"X12" AMORPHOUS SOLAR PANEL 12v 155x310mm 130mA SALE PRICE £4.99 REF SA24.

FIBRE OPTIC CABLE BUMPER PACK 10 metres for £4.99 ref MAG5P13 ideal for experimenters! 30 m for £12.99 ref MAG13P1

MIXED GOODIES PACK, BOX OF MIXED COMPONENTS WEIGHING 2 KILOS YOURS FOR JUST £5.99

SIDE LEVER .177 AIR RIFLE Superb, low priced general purpose rifle, 18" tapered,rifled barrel, fully adjustable open sights, wooden stock. very accurate with low recoil, 41". £39.95 ref R/3

4X28 TELESCOPIC SIGHTS Suitable for all air rifles, ground lenses, good light gathering properties. £19.95 ref R/7.

RATTLE BACKS Interesting things these, small piece of solid perspex like material that it you try to spin it on the desk it only spins one way! in fact if you spin it the 'wrong' way it stops of its own accord and go's back the other way! £1.99 ref GI/J01.

GYROSCOPES Remember these? well we have found a company that still manufactures these popular scientific toys, perfect gift or for educational use etc. £6 ref EP70

EDIBLE LONG LIFE CANDLES Made from Oleo Beef Stearin so you can eat them in an emergency alternatively, you could just light them! Each candle burns for approx 10 hours. 2 for £2.99 ref O/N326.

HYPOTHERMIA SPACE BLANKET 215x150cm aluminised foil blanket, reflects more than 90% of body heat. Also suitable for the construction of two way mirrors! £3.99 each ref O/L041.

LENSTATIC RANGER COMPASS Oil filled capsule, strong metal case, large luminous points. Sight line with magnifying viewer. 50mm dia, 86gm. £10.99 ref O/K604.

RECHARGE ORDINARY BATTERIES UP TO 10 TIMES! With the Battery Wizard! Uses the latest pulse wave charge system to charge all popular brands of ordinary batteries AAA, AA, C, D, four at a time! Led system shows when batteries are charged, automatically rejects unsuitable cells, complete with mains adaptor. BS approved. Price is £21.95 ref EP31.

TALKING WATCH Yes, it actually tells you the time at the press of a button. Also features a voice alarm that wakes you up and tells you what the time is! Lithium cell included. £7.99 ref EP26.

PHOTOGRAPHIC RADAR TRAPS CAN COST YOU YOUR LICENCE! The new multiband 2000 radar detector can prevent even the most responsible of drivers from losing their licence! Adjustable audible alarm with 8 flashing leds gives instant warning of radar zones. Detects X, K, and Ka bands, 3 mile range, 'over the hill' 'around bends' and 'rear trap facilities. micro size just 4.25"x2.5"x.75", Can pay for itself in just one day! £79.95 ref EP3.

SNOREBUSTER! A small wristwatch style device that detects the noise of snoring and instantly produces a stimulation to the wrist of the snorer without waking them. The bio feedback effectively prevents future bouts of snoring, thus reducing Snorebuster to only occasional use. 10 of 1,000's sold. £24.99 ref LA15999.

WORLDS SMALLEST TAPELESS MEMO PEN! Not only is the a smart pen but will record 20 seconds of memos etc. No more scatching about for scaps of paper!! £39.99 ref AA21381.

ELECTRIC TYRE INFLATOR High power micro air compressor inflates tyres, airbeds footballs etc. Includes pressure gauge. £14.99 ref J8231.

MAMOD STEAM ENGINE SP2 Powerful compact model steam engine complete with fuel etc. £39.95 ref SP2.

SANYO NICAD PACKS 120mmx14mm 4.8v 270 maH suitable for cordless phones etc. Pack of 2 just £5 ref EP78.

WE BUY SURPLUS STOCK FOR CASH

FREE CATALOGUE

1995 100 PAGE CATALOGUE NOW AVAILABLE, 45P STAMP OR FREE WITH ORDER.

PORTABLE RADIATION DETECTOR WITH NEW COMPUTER INTERFACE £59

A Hand held personal Gamma and X Ray detector. This unit contains two Geiger Tubes, has a 4 digit LCD display with a Piezo speaker, giving an audio visual indication. The unit detects high energy electromagnetic quanta with an energy from 30K eV to over 1.2M eV and a measuring range of 5-9999 UR/h or 10-99990 Nr/h. ref NOV18

BULL ELECTRICAL

250 PORTLAND ROAD, HOVE, SUSSEX . BN3 5QT. (ESTABLISHED 50 YEARS).

MAIL ORDER TERMS: CASH, PO OR CHEQUE WITH ORDER PLUS £3 POST PLUS VAT.

PLEASE ALLOW 7-10 DAYS FOR DELIVERY PHONE ORDERS WELCOME (ACCESS,VISA, SWITCH, AMERICAN EXPRESS)

TEL: 01273 203500

FAX 01273 323077

CIRCLE NO. 151 ON REPLY CARD

PORTABLE X RAY MACHINE PLANS Easy to construct plans on a simple and cheap way to build a home X-ray machine! Effective device, X-ray sealed assemblies. can be used for experimental purposes. Not a toy or for minors! £6/set. Ref F/XP1.

TELEKINETIC ENHANCER PLANS Mystify and amaze your friends by creating motion with no known apparent means or cause. Uses no electrical or mechanical connections, no special gimmicks yet produces positive motion and effect. Excellent for science projects, magic shows, party demonstrations or serious research & development of this strange and amazing phychic phenomenon. £4/set Ref F/TKE1.

ELECTRONIC HYPNOSIS PLANS & DATA This data shows several ways to put subjects under your control. Included is a full volume reference text and several construction plans that when assembled can produce highly effective stimuli. This material must be used cautiously. It is for use as entertainment at parties etc only, by those experienced in its use. £15/set. Ref F/EH2.

GRAVITY GENERATOR PLANS This unique plan demonstrates a simple electrical phenomena that produces an anti-gravity effect. You can actually build a small mock spaceship out of simple materials and without any visible means- cause it to levitate. £10/set Ref F/GRA1.

WORLDS SMALLEST TESLA COIL/LIGHTENING DISPLAY GLOBE PLANS Produces up to 750,000 volts of discharge, experiment with extraordinary HV effects, 'Plasma in a jar', St Elmo's fire, Corona, excellent science project or conversation piece. £5/set Ref F/BTC1/LG5.

COPPER VAPOUR LASER PLANS Produces 100mw of visible green light. High coherency and spectral quality similar to Argon laser but easier and less costly to build yet far more efficient. This particular design was developed at the Atomic Energy Commision of NEGEV in Israel. £10/set Ref F/CVL1.

VOICE SCRAMBLER PLANS Minature solid state system turns speech sound into indecipherable noise that cannot be understood without a second matching unit. Use on telephone to prevent third party listening and bugging. £6/set Ref F/VS9.

PULSED TV JOKER PLANS Little hand held device utilises pulse techniques that will completely disrupt TV picture and sound! works on FM too! DISCRETION ADVISED. £8/set Ref F/TJ5.

BODYHEAT TELESCOPE PLANS Highly directional long range device uses recent technology to detect the presence of living bodies, warm and hot spots, heat leaks etc. Intended for security, law enforcement, research and development, etc. Excellent security device or very interesting science project. £8/set Ref F/BHT1.

BURNING, CUTTING CO2 LASER PLANS Projects an invisible beam of heat capable of burning and melting materials over a considerable distance. This laser is one of the most efficient, converting 10% input power into useful output. Not only is this device a workhorse in welding, cutting and heat processing materials but it is also a likely candidate as an effective directed energy beam weapon against missiles, aircraft, ground-to-ground, etc. Particle beams may very well utilize a laser of this type to blast a channel in the atmosphere for a high energy stream of neutrons or other particles. The device is easily applicable to burning and etching wood, cutting, plastics, textiles etc £12/set Ref F/LC7.

MYSTERY ANTI GRAVITY DEVICE PLANS Uses simple concept. Objects float in air and move to the touch. Defies gravity, amazing gift, conversation piece, magic trick or science project. £6/set Ref F/ANT1K.

ULTRASONIC BLASTER PLANS Laboratory source of sonic shock waves. Blow holes in metal, produce 'cold' steam, atomize liquides. Many cleaning uses for PC boards, jewllery, coins, small parts etc. £6/set Ref F/ULB1.

ULTRA HIGH GAIN AMP/STETHOSCOPIC MIKE/SOUND AND VIBRATION DETECTOR PLANS Ultrasensitive device enables one to hear a whole new world of sounds. Listen through walls, windows, floors etc. Many applications shown, from law enforcement, nature listening, medical heartbeat, to mechanical devices. £6/set Ref F/HGA7

ANTI DOG FORCE FIELD PLANS Highly effective circuit produces time variable pulses of accoustical energy that dogs cannot tolerate £6/set Ref F/DOG2

LASER BOUNCE LISTENER SYSTEM PLANS Allows you to hear sounds from a premises without gaining access. £12/set Ref F/LLIST1

CRAWLING INSECT ROASTER PLANS Harmless high frequency energy pulses destroy pests as they crawl into the energy field! £4/set Ref F/RCR1

LASER LIGHT SHOW PLANS Do it yourself plans show three methods. £6 Ref F/LLS1

PHASOR BLAST WAVE PISTOL SERIES PLANS Handheld, has large transducer and battery capacity with external controls. £6/set Ref F/PSP4

INFINITY TRANSMITTER PLANS Telephone line grabber/room monitor. The ultimate in home/office security and safety! simple to use! Call your home or office phone, push a secret tone on your telephone to access either: A) On premises sound and voices or B) Existing conversation with break-in capability for emergency messages. £7 Ref F/TELEGRAB.

BUG DETECTOR PLANS Is that someone getting the goods on you? Easy to construct device locates any hidden source of radio energy! Sniffs out and finds bugs and other sources of bothersome interference. Detects low, high and UHF frequencies. £5/set Ref F/BD1.

ELECTROMAGNETIC COIL GUN PLANS Projects a metal object a considerable distance-requires adult

ELECTRIC MAN PLANS, SHOCK PEOPLE WITH THE TOUCH OF YOUR HAND! £5/set Ref F/EMA1

PARABOLIC DISH MICROPHONE PLANS Listen to distant sounds and voices, open windows, sound sources in 'hard to get' or hostile premises. Uses satellite technology to gather distant sounds and focus them to our ultra sensitive electronics. Plans also show an optional wireless link system. £8/set ref F/PM5

2 FOR 1 MULTIFUNCTIONAL HIGH FREQUENCY AND HIGH DC VOLTAGE, SOLID STATE TESLA COIL AND VARIABLE 100,000 VDC OUTPUT GENERATOR PLANS Operates on 9-12vdc, many possible experiments. £10 Ref F/HVM7/TCL4.

WOLVERHAMPTON BRANCH NOW OPEN AT WORCESTER ST W'HAMPTON TEL 01902 22039

MINI FM TRANSMITTER KIT Very high gain preamp, supplied complete with FET electret microphone. Designed to cover 88-108 Mhz but easily changed to cover 63-130 Mhz. Works with a common 9v (PP3) battery. 0.2W RF. £7 Ref 1001.

ELECTRONIC SIREN KIT Impressive 5 watt power output. Ideal for car/bike alarm etc. 6-12v dc max current 1A, 1.2khz £6 Ref 1003.

3-30V POWER SUPPLY KIT Variable, stabilized power supply for lab use. Short circuit protected, suitable for profesional or amateur use 24v 3A transformer is needed to complete the kit. £14 Ref 1007.

1 WATT FM TRANSMITTER KIT Supplied with piezo electric microphone 8-30vdc. At 25-30v you will get nearly 2 watts! £12 ref 1009.

FM/AM SCANNER KIT Well not quite, you have to turn the knob your self but you will hear things on this radio that you would not hear on an ordinary radio (even TV). Covers 50-160mhz on both AM and FM. Built in 5 watt amplifier, inc speaker. £15 ref 1013.

MOSQUITO REPELLER KIT Modern way to keep midges at bay! Runs for about a month on one 1.5v battery. £7 Ref 1015.

3 CHANNEL SOUND TO LIGHT KIT Wireless system, mains operated, separate sensitivity adjustment for each channel, 1,200 w power handling, microphone included. £14 Ref 1014.

MOTORBIKE/CYCLE TREMBLER ALARM KIT Adjustable sensitivity, preset alarm time, auto reset. Could be connected to horn etc. £12 Ref 1011.

0-5 MINUTE TIMER KIT adjustable, will switch up to 2A mains. Perfect for alarms, photography, etc. £7 Ref 1020.

4 WATT FM TRANSMITTER KIT Small but powerful FM transmitter, 3 RF stages, microphone and audio preamp included. £20 Ref 1028.

STROBE LIGHT KIT Adjustable from 1-60 hz (a lot faster than conventional strobes). Mains operated. £16 Ref 1037.

ULTRASONIC RADAR KIT Ideal as a movement detector with a range of about 10 metres, automate your cat flap! 12v dc. £15 Ref 1049.

LIQUID LEVEL DETECTOR KIT Useful for tanks, ponds, baths, rain alarm, leak detector etc. Will switch 2A mains. £5 Ref 1081.

COMBINATION LOCK KIT 9 key, programmable, complete with keypad, will switch 2A mains. 9v dc operation. £10 ref 1114.

PHONE BUG DETECTOR KIT This device will warn you if somebody is eavesdropping on your line. £6 ref 1130.

ROBOT VOICE KIT Interesting circuit that distorts your voice! adjustable, answer the phone with a different voice! 12vdc £9 ref 1131

TELEPHONE BUG KIT Small bug powered by the 'phone line, starts transmitting as soon as the phone is picked up! £8 Ref 1135.

FUNCTION GENERATOR KIT Produces sinusoidal, saw tooth and square waves from 20-20khz, separate level controls for each shape. Will produce all 3 together. 24vac. £16 ref 1008.

3 CHANNEL LIGHT CHASER KIT 800 watts per channel, speed and direction controls supplied with 12 LEDS (you can fit triacs instead to make kit mains, not supplied) 9-12vdc £17 ref 1026.

12V FLOURESCENT LAMP DRIVER KIT Light up 4 foot tubes from your car battery! 9v 2a transformer also required. £8 ref 1069.

VOX SWITCH KIT Sound activated switch ideal for making bugging tape recorders etc, adjustable sensitivity. £8 ref 1073.

INCAR SOUND TO LIGHT KIT Put some atmosphere in your car with this mini 3 channel sound to light. Each channel has 6 led's. £10 ref 1086.

7W HI FI AMPLIFIER KIT Useful, powerful, ideal for audio systems, intercoms etc. 12-18vdc £7 ref 1025.

PHONE CALL RELAY KIT Useful device that operates a relay whenever the 'phone rings. Switches mains at 2A. £10 ref 1122.

LEAD ACID CHARGER KIT Two automatic charging rates, visual indication of battery state, ideal for alarm systems etc, 100mA 12vdc £12 ref 1095.

CAR ALARM KIT Works on voltage drop and vibration, entry/exit delays, adjustable alarm duration. Ideal caravans etc £12 ref 1019.

PORTABLE ALARM KIT Based on mercury switch, alrm continues to sound until reset by owner. Buzzer inc. £11 ref 1150.

PREAMP MIXER KIT 3 input mono mixer, sep bass and treble controls plus individual level controls, 18vdc, input sens 100mA. £15 ref 1052.

METAL DETECTOR KIT Range 15-20cm, complete with case, 9vdc. £8 ref 1022.

SINGLE CHANNEL SOUND TO LIGHT KIT Mains operated, add rythum to your party for only £8 ref 1006.

SOUND EFFECTS GENERATOR KIT Produces sounds ranging from bird chips to sirens. Complete with speaker, add sound effects to your projects for just £9 ref 1045.

GUITAR PREAMP KIT Complete with tone controls, small enough to fit in any guitar, based on TL082 IC, 9-12vdc £8 Ref 1091.

16 WATT FM TRANSMITTER (BUILT) 4 stage high power, preamp required 12-18vdc, can use ground plane, yagi or open dipole. £69 ref 1021.

TELEPHONE AMPLIFIER KIT Very sensitive amplifier which uses a pickup coil (supplied) will let you follow a conversation with out holding the 'phone. £11 ref 1059.

*SOME OF OUR PRODUCTS MAY BE UNLICENSABLE IN THE UK

BULL ELECTRICAL

250 PORTLAND ROAD, HOVE, SUSSEX BN3 5QT. (ESTABLISHED 50 YEARS).

MAIL ORDER TERMS: CASH, PO OR CHEQUE WITH ORDER PLUS £3 POST PLUS VAT.

PLEASE ALLOW 7-10 DAYS FOR DELIVERY PHONE ORDERS WELCOME (ACCESS, VISA, SWITCH, AMERICAN EXPRESS)

TEL: 01273 203500

FAX 01273 323077

HUMIDITY METER KIT Builds into a precision LCD humidity meter, 9 lc design, pcb, lcd display and all components included. £49

PC TIMER KIT Four channel output controlled by your PC, will switch high current mains with relays (supplied). Software supplied so you can program the channels to do what you want whenever you want. Minimum system configeration is 286, VGA, 4.1,640k, serial port, hard drive with min 100k free. £24.99

DIVINING RODS Expensive technology cannot challenge the fool proof art of water divining, passed down from generation to generation. Seeing is believing. Use in the home, garden, countryside or desert, it's divinely simple! £4.99 a pair ref E/3.

HUGE BUBBLE MAKING KIT You'll be amazed at the the size of the bubbles you can acheive with this bubble making kit. Once you have got the knack it is possible to make bubbles of up to 40 feet long. £11.99 ref E/9.

FM CORDLESS MICROPHONE This unit is an FM broadcasting station in minature, 3 transistor transmitter with electret condenser mic+fet amp design result in maximum sensitivity and broad frequency response. 90-105mhz, 50-1500hz, 500 foot range in open country! PP3 battery required. £15.00 ref 15P42A.

MAGNETIC MARBLES They have been around for a number of years but still give rise to curiosity and amazement. A pack of 12 is just £3.99 ref GI/R20

STETHOSCOPES A fully functioning stethoscope for all those intricate projects. Enables you to listen to motors, pipes, heartbeats, walls, insects etc. £6 ref MAR6P6.

NICKEL PLATING KIT Proffesional electroplating kit that will transform rusting parts into showpieces in 3 hours! Will plate onto steel, iron, bronze, gunmetal, copper, welded, silver soldered or brazed joints. Kit includes enough to plate 1,000 sq inches. You will also need a 12v supply, a container and 2 12v light bulbs. £39.99 ref NIK39.

SHOP WOBBLERS! Small assemblies designed to take D size batteries and 'wobble' signs about in shops! £3.99 Ref SEP4P2.

OMRON ELECTRONIC INTERVAL TIMERS.

*******NEW LOW PRICES TO CLEAR!!!********

Minature adjustable timers, 4 pole c/o output 3A 240v,

HY1230S, 12vDC adjustable from 0-30 secs. £4.99
HY1210M, 12vDC adjustable from 0-10 mins. £4.99
HY1260M, 12vDC adjustable from 0-60 mins. £4.99
HY2460M, 24vAC adjustable from 0-60 mins. £2.99
HY243H, 24vAC adjustable from 0-3 hours. £2.99
HY2401S, 240v adjustable from 0-1 secs. £4.99
HY2405S, 240v adjustable from 0-5 secs. £4.99
HY24060m, 240v adjustable from 0-60 mins. £6.99

DRINKING BIRD Remember these? hook onto wine glass (supplied) and they drink, standup, drink, standup ETC! £4 each Ref EF1

SOLAR POWER LAB SPECIAL You get TWO 6"x6" 6v 130mA solar cells, 4 LED's, wire, buzzer, switch plus 1 relay or motor. Superb value kit just £5.99 REF: MAG6P8

BUGGING TAPE RECORDER Small voice activated recorder, uses micro cassette complete with headphones. £28.99 ref MAR29P1.

PLUG IN ACORN PSU 19v AC 14w, £2.99 REF MAG3P10

POWER SUPPLY fully cased with mains and o/p leads 17v DC 900mA output. Bargain price £5.99 ref MAG6P9

9v DC POWER SUPPLY Standard plug in type 150ma 9v DC with lead and DC power plug. price for two is £2.99 ref AUG3P4.

13.8V 1.9A psu cased with leads. Just £9.99 REF MAG10P3

INFRA RED REMOTE CONTROLLERS Originally made for hi spec satellite equipment but perfect for all sorts of remote control projects. Our clearance price is just £2 REF: MAG2

MAINSCABLE Precut black 2 core 2 metre lengths ideal for repairs, projects etc. 50 metres for £1.99 ref AUG2P7.

COMPOSITE VIDEO KIT. Converts composite video into separate H sync, V sync, and video. 12v DC. £8.00 REF: MAG8P2.

UNIVERSAL PC POWER SUPPLY complete with flyleads, switch, fan etc 200w at £20 REF: MAG20P3 (265x155x125mm).

GYROSCOPE About 3" high and an excellent educational toy for all ages! Price with instruction booklet £6 Ref EF15.

FUTURE PC POWER SUPPLIES These are 295x135x60mm, 4 drive connectors 1 mother board connector. 150watt, 12v fan, iec inlet and on/off switch. £12 Ref EF6.

VENUS FLYTRAP KIT Grow your own carnivorous plant with this simple kit £3 ref EF34.

TWEETERS 2" diameter good quality tweeter 140R (ok with the above speaker) 2 for £2 REF: MAG2P5 or 4 for £3 REF: MAG3P4

6"X12" AMORPHOUS SOLAR PANEL 12v 155x310mm 130mA Bargain price just £5.99 ea REF MAG6P12.

FIBRE OPTIC CABLE BUMPER PACK 10 metres for £4.99 ref MAG5P13 ideal for experimenters! 30 m for £12.99 ref MAG13P1

ROCK LIGHTS Unusual things these. two pieces of rock that glow when rubbed together! belived to cause rain! £3 a pair Ref EF29.

3" by 1" AMORPHOUS SOLAR PANELS 14.5v, 700mA 10 watts, aluminium frame, screw terminals, £44.95 ref MAG45.

ELECTRONIC ACCUPUNCTURE KIT Builds into an electronic version instead of needles! good to experiment with. £7 ref 7P30

SHOCKING COIL KIT Build this little battery operated device into all sorts of things, also gets worms out of the ground! £7 ref 7P36.

FLYING PARROTS Easily assembled kit that builds a parrot that actually flaps its wings and flies! 50 m range £6 ref EF2.

HIGH POWER CATAPULTS Hinged arm brace for stability, tempered steel yoke, super strength latex power bands. Departure speed of ammunition is in excess of 200 miles per hour! Range of over 200 metres! £7.99 ref R/9.

BALLON MANUFACTURING KIT British made, small blob blows into a large, longlasting balloon, hours of fun! £3.99 ref GI/E99R

WE BUY SURPLUS STOCK FOR CASH

FREE CATALOGUE

1995 100 PAGE CATALOGUE NOW AVAILABLE, 45P STAMP OR FREE ON REQUEST WITH ORDER.

CIRCLE NO. 152 ON REPLY CARD

APPLICATIONS

Please mention Electronics World + Wireless World when seeking further information

Power converters for lcd backlighting

Transistor requirements for backlighting purposes – their mode of operation within the backlighting circuit, important parameters, and their impact on system efficiency – are the primary focus of Zetex *Application Note 14*. The note also provides several ccfl power supplies for use with lcd backlighting applications.

Around 1kV is required to strike a fluorescent tube. On striking, the tube's gaseous contents ionise and it begins to conduct at a lower sustaining voltage. This results in a negative resistance characteristic. Other power supply constraints include an intolerance of dc current, sensitivity to waveform crest factor and radio-frequency interference criteria.

For drive waveforms at low frequencies, a fluorescent tube has time to react to the changing waveform potential, and effectively re-strikes on each reversal of the waveform polarity. This results in flicker. At high drive waveform frequencies, this effect is not apparent, and the lamp approximates to a resistive load. Usual operating frequencies range from 25-120kHz, dictated by inaudibility requirements and converter inductor size.

Drive requirements dictated by the cold-cathode fluorescent tube's behaviour and preferred operating conditions can be achieved by a resonant push-pull or Royer converter, **Fig. 1**.

Transistors $Tr_{1,2}$ are saturated by base drive provided by the feedback winding W4. Base current is defined by resistors R_1 and R_2. Supply inductor L_1 and primary capacitance C_1 force the circuit to run sinusoidally. This provides the drive waveform to the load and also results in minimised harmonic generation and rf interference.

Voltage step-up is achieved by the W1:(W2+W3) turns ratio. Secondary winding ballast capacitor C_2 sets tube current.

Prior to the tube striking, or when no tube is connected, operating frequency is set by the resonant parallel circuit. This comprises primary capacitance C_1 and the transformer primary windings W2 and W3. Once the tube has struck, ballast capacitor C_2 plus distributed tube and parasitic capacitances are reflected back through the transformer, lowering operating frequency.

The secondary load can become dominant in circuits with a high transformer turns ratio, for example, those designed to operate from very low dc input voltages.

Each transistor's collector is subject to a voltage $2\times\pi/2\times V_s$ or $\pi\times V_s$. Voltage V_s is the dc input voltage to the converter. To reliably strike the tube this primary voltage is stepped up by the transformer turns ratio Ns:Np. Starting voltage is dependent on display housing, ground plane location, tube age, and ambient temperature.

Longer tube life

Incorporating the converter within a control loop can be used to regulate tube current. This helps maximise tube life, ensure a constant light output as battery pack voltage decreases and enable the adjustment of tube brightness.

The usual circuit employs a Buck or step-down converter driven directly from the battery pack to increase efficiency. It feeds either the centre tap of the transformer or the emitter current of the transistors depending on the controller's technology and capability, **Fig 2a) and b)**.

The controller can monitor tube current directly in the secondary or in some recent systems by the primary

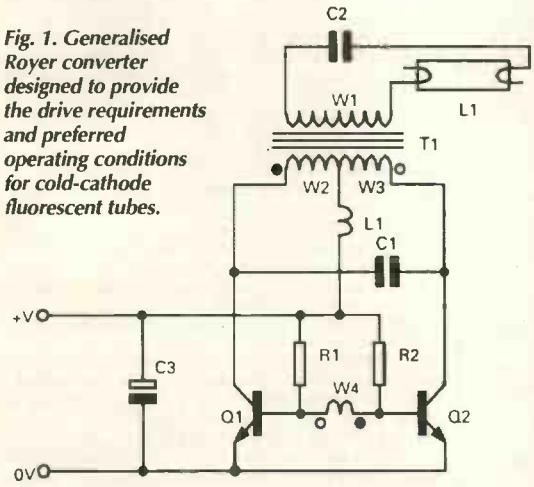

Fig. 1. Generalised Royer converter designed to provide the drive requirements and preferred operating conditions for cold-cathode fluorescent tubes.

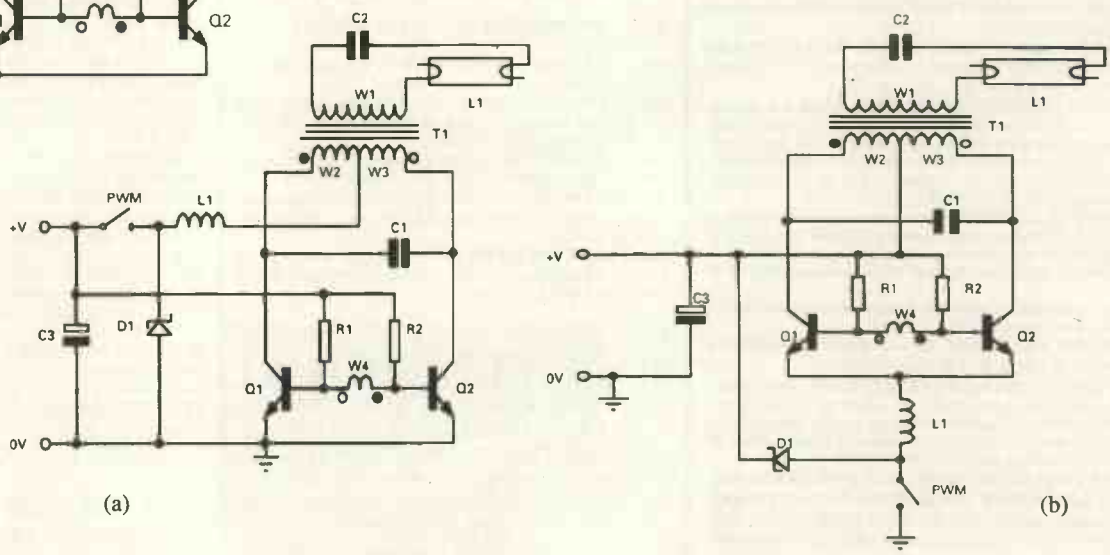

Fig. 2a) and b). Royer converters with pulse width modulation. The circuits employ a Buck or stepdown converter – directly from the battery to increase efficiency – feeding the centre tap of the transformer, or the emitter current of the transistors.

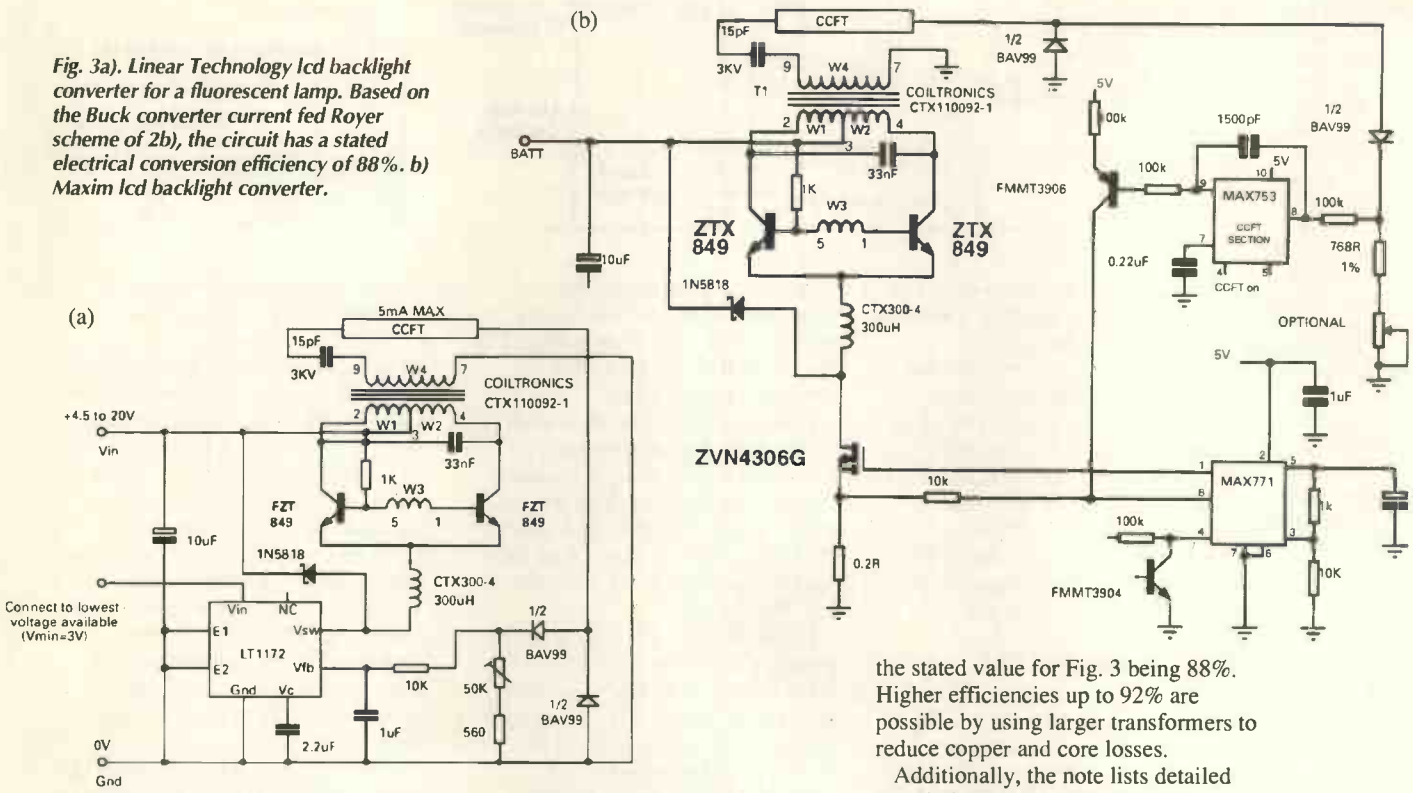

Fig. 3a). Linear Technology lcd backlight converter for a fluorescent lamp. Based on the Buck converter current fed Royer scheme of 2b), the circuit has a stated electrical conversion efficiency of 88%. b) Maxim lcd backlight converter.

current. Using the primary current method allows the tube to be fully floating with low high-voltage loss.

Figures 3a) and **b)** show circuits based on the Buck converter current fed Royer scheme of Fig 2b). Each monitors lamp current directly, averaging the positive half cycles of lamp current, and applying this signal to the controllers feedback pin. Electrical conversion efficiency using this form of circuit can be very high, the stated value for Fig. 3 being 88%. Higher efficiencies up to 92% are possible by using larger transformers to reduce copper and core losses.

Additionally, the note lists detailed descriptions on transistor choices suitable for the Royer converter with regards to performance, efficiency and breakdown characteristics.

Zetex, *Fields New Road, Chadderton, Oldham OL9 8NP, Tel, 0161-627 5105, fax 0161-627 5467.*

Active power factor correction for psus

Waveform distortion and overheating of transformers and neutral conductors in three-phase systems are just a few of the effects due to the poor power factor of electronic power conversion equipment.

In its simplest form, poor power factor caused by reactive linear circuit elements results as the current either leads or lags the voltage, depending on whether the load looks capacitive or inductive, **Fig. 1a)**. This type is easily corrected by adding a reactive component of opposite sign in parallel with the load to cancel the reactive term, **Fig. 1b**.

Alternatively poor power factor associated with electronic power conversion equipment is caused by nonlinear circuit elements. In most off-line power supplies, the ac to dc front end consists of a bridge rectifier followed by a large filter capacitor, **Fig 2a)**. Current is drawn from the line only when the peak voltage on the line exceeds the voltage on the filter capacitor, Fig. **2b)**. Since the rate of rise and fall of current is

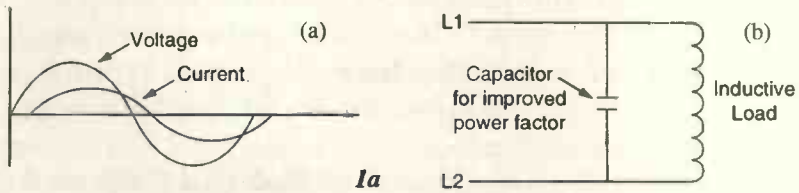

Fig. 1a). Traditional poor power factor – the current either leads or lags the voltage. b) An easy way to correct this type of poor power factor is to add a reactive component of opposite sign in parallel with the load.

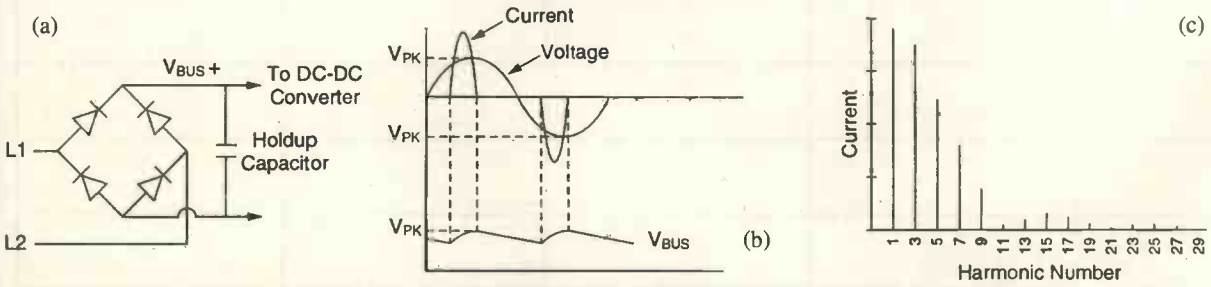

Fig. 2a). off-line power supply with a ac-dc front end consisting of a bridge rectifier and large filter capacitor. 2b) Current is drawn from the line only when peak voltage on the line exceeds voltage on the filter capacitor c) Typical input current spectrum of an electronic load. The odd harmonics are generated as a result of poor power factor occurring in electronic loads.

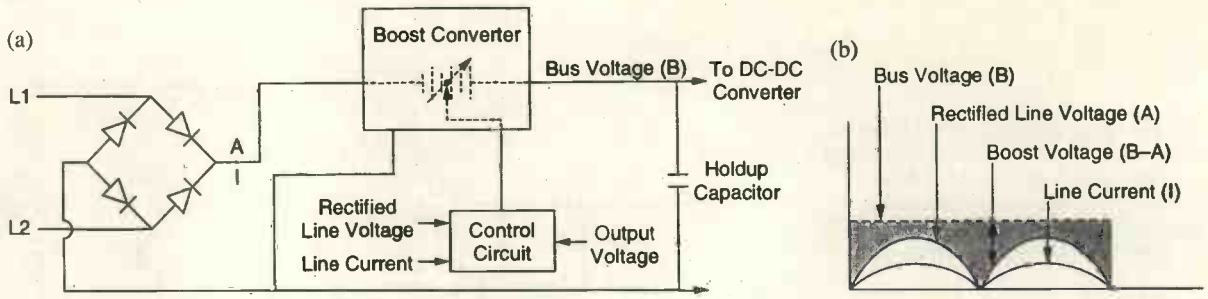

Fig. 3a). Here, correction for poor power factor associated with electronic power supplies is active. A control circuit adjusts a boost voltage to maintain a sinusoidal input current. b) shows waveforms maintained by the active power factor correction circuit of 3b).

greater than that of the line voltage, and current flows discontinuously, a series of predominantly odd harmonics is generated, Fig. 2c), causing problems with the power distribution system.

Slightly improved power factor of the system of Fig. 2 can be achieved by adding series inductance with the line or decreasing the value of the holdup capacitor, which will lengthen conduction angle. Unfortunately both these solutions limit the amount of power that can be drawn from the line.

Active approach to PFC

During the operation of an active power factor correction circuit, **Fig. 3a)**, incoming line voltage passes through a bridge rectifier producing a full wave rectified output, **Fig. 3b)**, curve **A**. Since the line peak value is less than the bus voltage, no current flows into the holdup capacitor unless line voltage is boosted above the voltage present on the holdup capacitor. This allows the control circuit to adjust the boost voltage, Fig. 3b), curve **B-A**, maintaining a sinusoidal input current.

This is maintained by the control circuit using the input voltage waveform as a template. It measures the input current, compares it to the input voltage waveform, and adjusts the boost voltage to produce an input current waveform of the same shape, Fig. 3b), curve **I**.

Simultaneously, the control circuit monitors bus voltage and adjusts the boost voltage to maintain a coarsely regulated dc output, Fig. 3b), curve **B**. Since the primary function of the control circuit is to maintain a sinusoidal input current, a slight variation in dc bus voltage is allowed.

Because a well designed power factor correction circuit replicates the distortion present in the incoming line voltage, it is essential to use a low distortion voltage source when evaluating such circuits.

Figure 3b) illustrates the approach to power factor correction taken with the Vicor *VI-HAM* harmonic attenuator module, a component-level ac front end that, when used with *VI-26x* or *VI-J6x* dc-to-dc converters, provides a universal input, near-unity power factor and an off-line switching power supply meeting IEC 555.

Using an active power factor correcting circuit results in few discontinuities in input current and consequently low distortion and harmonic content of the input current drawn from the line.

This description represents most of Vicor UK's recent application note on active power factor correction. ■

Vicor UK, *Suite 15, Coliseum Business Centre, Camberley, GU15 3YL. Tel, +44(0) 1276-678222, fax, 681269.*

FREE TO SUBSCRIBERS

Electronics World offers you the chance to advertise

ABSOLUTELY FREE OF CHARGE!

Simply write your ad in the form below, using one word per box, up to a maximum of twenty words (remember to include your telephone number as one word). You must include your latest mailing label with your form, as this **free** offer applies to private subscribers only. Your ad will be placed in the first available issue.

This offer applies to private sales of electrical and electronic equipment only.

Trade advertisers should call **Malcolm Wells on 0181-652 3620**

All adverts will be placed as soon as possible. However, we are unable to guarantee insertion dates. We regret that we are unable to enter into correspondence with readers using this service, we also reserve the right to reject adverts which do not fulfil the terms of this offer.

Please send your completed forms to:

Free Classified Offer: Electronics World, L329, Quadrant House, The Quadrant, Sutton, Surrey SM2 5AS

TOROIDAL TRANSFORMERS

High Quality Low Prices

In addition to our standard range
we will be pleased to quote
for your special requirements.

PRICE LIST

VA	Mail Order	Quantity Price Excluding VAT & Carriage 2+	10+	25+	50+	100+
15	14.59	10.21	7.69	5.69	5.52	5.35
30	16.04	11.23	8.45	6.25	6.06	5.89
50	17.83	12.48	9.40	9.95	6.74	6.53
60	18.02	12.61	9.49	7.02	6.82	6.61
80	17.98	12.60	9.49	7.02	6.81	6.60
100	21.07	14.74	11.11	8.21	7.96	7.72
120	21.54	15.08	11.35	8.39	8.15	7.89
150	25.98	18.19	13.70	10.12	9.82	9.53
160	23.83	16.68	12.56	9.28	9.00	8.73
225	30.10	21.07	15.87	11.73	11.39	11.04
300	34.32	24.02	18.09	13.38	12.98	12.58
400	46.19	32.32	24.35	17.99	17.47	16.94
500	50.48	35.34	26.61	19.67	19.09	18.51
625	53.09	41.36	31.14	23.02	21.24	20.57
750	58.39	44.23	33.30	24.62	23.89	23.17
1000	78.80	55.16	41.54	30.70	29.80	28.89
1200	82.45	57.72	43.46	32.12	31.17	30.23
1500	105.10	73.63	55.40	40.94	39.74	38.53
2000	114.45	96.13	72.39	53.51	51.93	50.36
2500	163.04	114.13	85.94	63.51	61.64	59.79

These prices are for 240volt primary and two equal secondaries with 8" colour coded fly leads.
Each transformer is supplied with a mounting kit (steel dish washer pads, nut and bolt)
Mail order prices include vat and postage.
Please do not hesitate to telephone or write with your particular requirements.

Airlink Sales Co
16 Knight Street, Sawbridgeworth, Herts CM21 9AT
Tel: 01279 600139 Fax: 01279 726379

CIRCLE NO. 153 ON REPLY CARD

CHART AUDIO LEVELS

On-screen colour display or hard copy printout

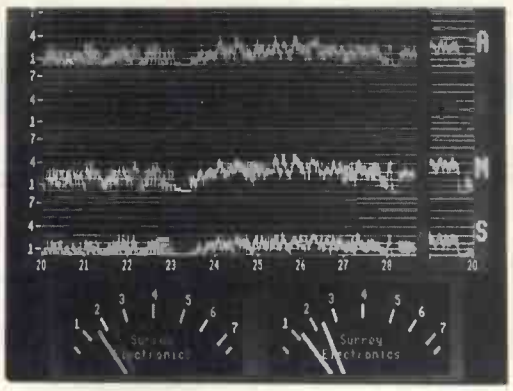

PPM10 In-Vision PPM and Chart Recorder generates a display emulating the well known coaxial TWIN movements for monitoring stereo audio levels and mono compatibility. Also: **TWIN TWIN PPM** comprising two PPM9 boards, featuring inherent stability with law under microprocessor control, the unit gives simultaneous monitoring of A/B on red/green and M/S on white/yellow pointers. Manufactured under licence from the BBC.

★ Advanced Active Aerial 4kHz-30MHz ★ Stabilizer frequency shift units for howl reduction ★ 10 Outlet Distribution Amplifier ★ Stereo Variable Emphasis Limiter ★ Stereo Disc Amplifier ★ Peak Deviation Meter ★ PPM9, PPM5 hybrid and PPM8 IEC/DIN −50/+6dB drives and movements ★ Broadcast Stereo Coders ★ Broadcast Monitor Receiver 150kHz-30MHz ★

SURREY ELECTRONICS LTD
The Forge, Lucks Green, Cranleigh
Surrey GU6 7BG
Telephone: 01483 275997 Fax: 276477

RAPID, ACCURATE ELECTRONICS CAD

Schematic and PCB CAD

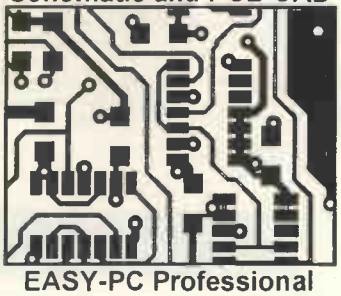

EASY-PC Professional

Electro-magnetic Simulation

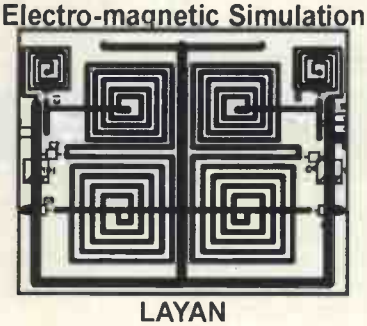

LAYAN

Smith Chart R.F. CAD

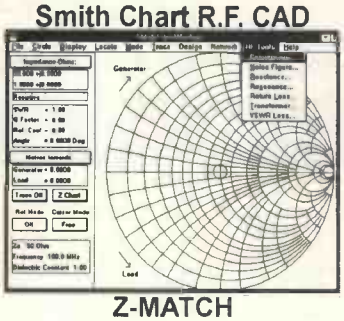

Z-MATCH

Filter Design

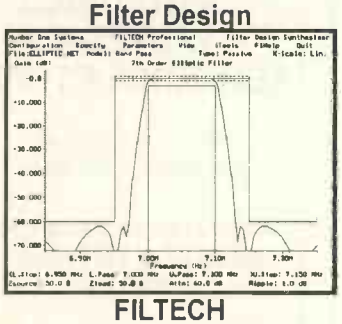

FILTECH

Logic Simulation

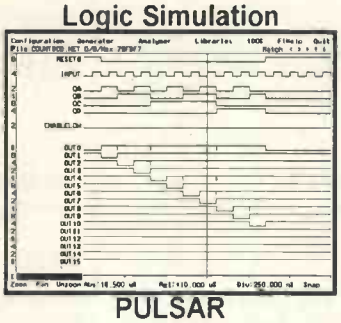

PULSAR

Analogue Simulation

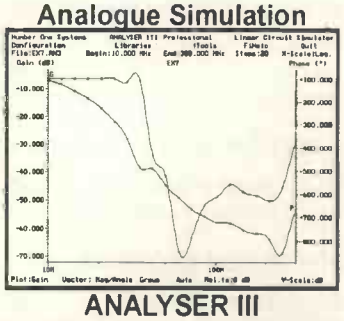

ANALYSER III

Number One Systems

Europe: Ref: WW, Harding Way, St.Ives, Cambs, PE17 4WR, UK
USA: Ref: WW, 126 Smith Creek Drive, Los Gatos, CA 95030 USA

Email: sales@numberone.com
Tel: +44 (0) 1480 461778
Fax: +44 (0) 1480 494042

Tel/Fax: (408) 395-0249

From £98.00

CIRCLE NO. 154 ON REPLY CARD

CLASSIFIED

TEL 0181 652 3620 FAX 0181 652 8956

ARTICLES WANTED

WE WANT TO BUY!!

IN VIEW OF THE EXTREMELY RAPID CHANGE TAKING PLACE IN THE ELECTRONICS INDUSTRY, LARGE QUANTITIES OF COMPONENTS BECOME REDUNDANT. WE ARE CASH PURCHASERS OF SUCH MATERIALS AND WOULD APPRECIATE A TELEPHONE CALL OR A LIST IF AVAILABLE. WE PAY TOP PRICES AND COLLECT.

R. HENSON LTD.
21 Lodge Lane, N.Finchley,
London N12 8JG.
5 Mins, from Tally Ho Corner.
TELEPHONE
0181-445-2713/0749
FAX 0181-445-5702

W A N T E D ! !

Top prices paid for your test equipment made by HEWLETT-PACKARD, MARCONI, FLUKE, TEKTRONIX, BOONTON, ROHDE & SCHWARZ etc.

From Europe's No. 1 Test Equipment Leader

ROSENKRANZ-ELEKTRONIK, AXEL ROSENKRANZ
GROSS GERAUER WEG 55, 64295 DARMSTADT/GERMANY
Phone: 0049-6151-3998-0 Fax: 0049-6151-3998-18

CONTACT US NOW!

You are looking for test equipment? More than 10,000 units in stock for immediate delivery. Call or fax for our new 100 page catalogue

—— today ——

**** WHAT WE DON'T HAVE YOU DON'T NEED ****

PURCHASE FOR CASH

SURPLUS – OBSOLETE – REDUNDANT – EXCESS stocks of electronic, electrical components/accessories, part processed and/or finished products. Plese submit preliminary information or lists for immediate response to:

K.B. COMPONENTS, 21 Playle Chase, Gt Totham, Maldon, Essex CM9 8UT
Telephone 01621-893204. Facsimile 01621-893180.

WANTED: TEKTRONIX OSCILLOSCOPE Type 547 – Dead or Alive. Good money paid. Telephone Chris on 01869 277092 (evenings).

★★WANTED★★

Test equipment, Electronic Scrap, Valves, Transmitters/Receivers, Factory & Warehouse Clearance.

Confidentiality Assured.

TELFORD ELECTRONICS
Phone: 01952 605451
Fax: 01952 677978

WANTED

Test equipment, receivers, valves, transmitters, components, cable and electronic scrap and quantity. Prompt service and cash.

M & B RADIO
86 Bishopgate Street,
Leeds LS1 4BB
Tel: 0113 2435649
Fax: 0113 2426881

9956

ARTICLES FOR SALE

FOR SALE PHILIPS Video Recorder Type N1501. Good condition with cassettes, handbook. £68. Bovill, 12 Gorselands Close, West Byfleet KT14 6PU.

TEKTRONIX 465 Dual CH Scope complete with Tektronix Mobile Trolley, Manuals and Probes £350. Carriage extra. Very clean, working. Tel: 01573 224664.

RECRUITMENT

Axonn Corp. is the leading supplier of high performance, low cost, embedded spread spectrum technology. Axonn's Fortune 500 customers integrate our SW and HW designs into an impressive array of innovative, very high volume applications. Our designers work hand-in-hand with engineers worldwide to create future product lines. Axonn continually researches new, patentable RF communication techniques.

STAFF RF DESIGN ENGINEERS

Hands-on design experience required with frequency synthesizers, receiver, and transmitter designs at 900 and 2400 MHz. Must be proficient with RF modelling software such as Touchstone or Eagleware and experience with surface mount devices.

SOFTWARE ENGINEERS

Must have experience in single chip microcomputer design and assembly language programming. Experience in C/C++ development, knowledge of DSP techniques desirable.

DSP DESIGN ENGINEER

Experience designing embedded hardware and firmware DSP microprocessor based solutions. Advanced degree and/or experience designing digital filters and transforms desirable. Experience using TMS320C2x, Z89xxx, ADSP21xx a plus.

If you want challenge, variety, design creativity and the growth available in a smaller company, FAX your résumé to ++1-504-282-0999, Dr. Walter Rawle.

AXONN

101 W. Robert E. Lee Blvd., Suite 202

New Orleans, Louisiana, USA.

VALVES

ELECTRONICS VALVES & SEMICONDUCTORS

Phone for a most courteous quotation

We are one of the largest stockists of valves etc, in the U.K.

COLOMOR ELECTRONICS LTD
170 Goldhawk Road,
London W12 8HJ
England.
Tel: 0181 743 0899
Fax: 0181 749 3934

CLASSIFIED

TEL 0181 652 3620 FAX 0181 652 8956

ARTICLES FOR SALE

VISA

SUPPLIER OF QUALITY USED TEST INSTRUMENTS

CONTACT

Cooke International

ELECTRONIC TEST & MEASURING INSTRUMENTS
Unit Four, Fordingbridge Site, Main Road, Barnham,
Bognor Regis, West Sussex, PO22 0EB
Tel: (+44)01243 545111/2 Fax: (+44)01243 542457

CIRCLE NO. 155 ON REPLY CARD

VISA

OPERATING & SERVICE MANUALS

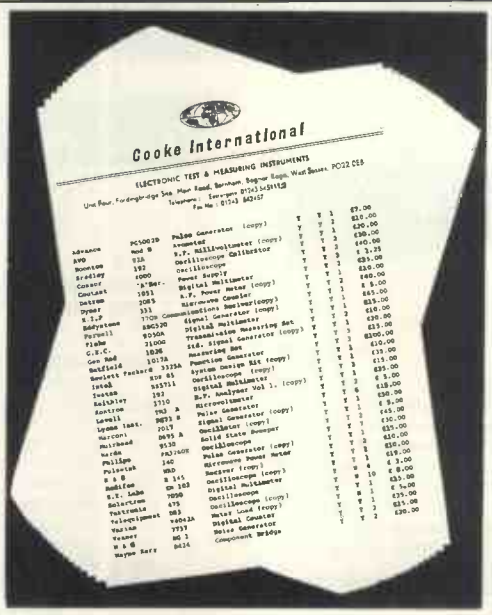

CONTACT

Cooke International

ELECTRONIC TEST & MEASURING INSTRUMENTS
Unit Four, Fordingbridge Site, Main Road, Barnham,
Bognor Regis, West Sussex, PO22 0EB
Tel: (+44)01243 545111/2 Fax: (+44)01243 542457

CIRCLE NO. 156 ON REPLY CARD

INDEX TO ADVERTISERS

	PAGE
Adept Scientific Micro	959
Airlink Sales Co	997
AMI	946
Anchor Surplus Ltd	915
BK Electronics	936
Bull Electrical	992, 993
Chelmer Valve Company	944
CMS	936, 944
Cricklewood Electronics	951
Crossware Products	927
Crownhill Associates	921
Danmere	935
Dataman	BC
Devantech Ltd	951
Display Electronics Ltd	941
Equinox Technologies	IFC
Field Electric Ltd	927
Grandata Ltd	942
Halcyon Electronics	953
Hart Electronic Kits	948
HSPS Ltd	969
Interconnections	959
Iosis	946
Johns Radio	957
JPG Electronics	969
Kestrel Electronic Co	934
Lab Center	916, 946
Langrex Supplies Ltd	934
Lloyd Research	906
M&B Radio (Leeds)	977
Millford Instruments	982
Number One Systems	997
Olson Electronics Ltd	911
Perrybee	959
Pico Technology	934
Quickroute Systems	906
Ralfe Electronics	1000
Seetrax Ltd	953
Simextron Global	936
Smart Communications	944
Sowter Transformers Ltd	906
Stag Programmers	953
Stewart of Reading	981
Surrey Electronics	997
TDC Limited	927
Technology Sources Ltd	969
Telford Electronics	951
Telnet	982
Those Engineers Ltd	988
Tie Pie Engineering	978
Triangle Digital Services	981
Tsien Ltd	988
Ultimate Technology Ltd	IBC

Radio Books

UK Scanning Directory,
Eavesdropping on the British Military,
Shortwave Maritime Communications,
Scanner Busters and many more.
Ask for details and Free catalogue
INTERPRODUCTS
Tel. & Fax: 01738-441199

ARTICLES WANTED

TOP PRICES PAID

For all your valves, tubes, semi conductors and IC's.

Langrex Supplies Limited
1, Mayo Road,
Croydon,
Surrey CR0 2QP

TEL: 0181-684 1166
FAX: 0181-684 3056

RALFE · ELECTRONICS

36 EASTCOTE LANE, S. HARROW, MIDDLESEX HA2 8DB
TEL (+44) 0181-422 3593. FAX (+44) 0181-423 4009

NOW IN 40th YEAR

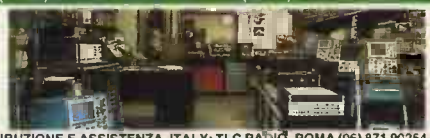

DISTRIBUZIONE E ASSISTENZA, ITALY: TLC RADIO, ROMA (06) 871 90254

SPECTRUM ANALYSERS

IFR MODEL A-7550 1GHz portable with inbuilt tracking gen & IEEE ops	£4750
HP141T 1.25GHz system (8552B, 8554B)	£1250
HP3580A 5Hz – 50kHz audio frequency spectrum analyser	£1000 to £1500
HP3582A audio frequency fft analyser dual-channel	£2000
HP8591E 1.8GHz synthesized with tracking gen option	£8000
HP8568A high-specification 1.5GHz spectrum analyser	£7500
MARCONI 2386 100Hz-26.5GHz (in 1Hz steps!)	£15000
TEKTRONIX 492 22GHz spectrum analyser GPIB	£6000

MARCONI INSTRUMENTS

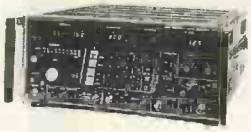

2019A synthesized AM/FM signal generator 80kHz – 1040MHz	£2000
2305 modulation analyser 50kHz – 2.3GHz	£3000
2828A/2829 digital simulator/analyser	£500
2386 spectrum analyser, superb specification, 100Hz – 26.5GHz	£15000
2926 TV generator & inserter (NTSC variant)	£500
6460/6421 power meter & sensor 10MHz – 12.4GHz	£350
6500 amplitude analyser c/w 2c 6514 waveguide detectors	£2500
6960 microwave power meter with 6910 power sensor 10MHz – 20GHz	£1000
OA2805A pcm regenerator test set	£750
TF2910/4 non-linear distortion (video) test set	£500
TF2910 TV interval timer	£250

TEST EQUIPMENT

APLAB TIS115/230/500 transverter 115/230V in/out. 50/60/400Hz. 500VA	£650
BRUEL & KJAER 2511 vibration meter (field set with 1621 filter)	£1500
BRUEL & KJAER 2317 portable level recorder	£1500
BRUEL & KJAER 2635 charge amplifier	£950
BRUEL & KJAER 2609 measuring amplifier	£750
BRUEL & KJAER 2308 analogue X-Y pen recorder	£750
BRUEL & KJAER 2639 preamplifier	£275
DATRON 1061 & 1061A – various, digital multimeter & 1065 – call	
IDACOM PT502 protocol analyser (Hewlett Packard E3910B with E3936A)	£3500
KIKUSUI 8520 frequency response analyser 20H – 200KHz	£750
PHILIPS PM8272 X-Y & Y-t dual-channel pen recorder	£850
RACAL-DANA 1992 frequency counter 1.3GHz IEEE option	£700
SULZER LABORATORIES rubidium frequency standard	£1250
SYSTRON DONNER 1300 synthesized signal generator 100Hz – 1GHz GPIB	£1350
TEKTRONIX 1503C tdr with battery & printer options	£3250
TEKTRONIX P6303 o'scope probes NEW 250MHz X1/X10 with readout pin	£50ea
WAVETEK 2520 synthesized signal generator 200KHz – 2000MHz	2500

• ralfe electronics • exclusively professional T&M

We are very pleased to announce that we have recently been successful in achieving accreditation to BS EN ISO 9002 (Cert 95/013).

•

Our continued commitment over the years to provide a genuine quality service has now been received 'official recognition'!

HEWLETT PACKARD

1640B serial data analyser	£500
339A distortion meter	£1750
3325B function generator	£3000
11757B multipath fading simulator	£3500
3400A voltmeter, analogue 10Hz – 10MHz	£250
3456A digital multimeter	£750
3580A audio frequency spectrum analyser	£1500
3581C selective voltmeter	£1250
4140B pA/meter, DC voltage source	£3750
4339A high resistance meter c/w lead set 16117B	£2000
4275A multi-frequency lcr meter	£3500
435B microwave power meter, analogue	£400
436A microwave power meter (digital)	£850
5334B frequency counter w option 010 high-stab	£1250
54100A 1GHz digitizing oscilloscope	£1750
6012A power supply 0-60V 0-50A 1000W	£650
6033A system power supply 0-20V 0-30A	£1000
6038A system power supply 0-60V 0-10A	£1000
6253A dual power supply 0-20V 0-1A twice	£250
6443B power supply 0-120V 0-2.5A	£400
6825A bipolar power supply/amplifier —20V to +20V, 0-1A	£350
8011A pulse generator 0.1Hz – 20MHz	£500
8444A tracking generator with option 059	£1500
85054B 'N-type' calibration kit	£3000
8568A spectrum analyser 100Hz – 1.5GHz	£7500
87510A gain-phase analyser 100KHz – 300MHz	£6500
85057A 2.4mm verification kit	£2000
8901A modulation analyser with option 02/010	£3500

PLEASE NOTE: ALL OUR EQUIPMENT IS NOW OPERATION-VERIFICATION TESTED BEFORE DESPATCH BY INDEPENDENT LABORATORY

We would be pleased to handle all grades of calibration or NAMAS certification by same laboratory at cost price. All items covered by our 90-day parts and labour guarantee and 7-day 'Right to Refuse' (money back) warranty.

ALL PRICES SUBJECT TO ADDITIONAL VAT AND CARRIAGE

CIRCLE NO. 157 ON REPLY CARD

ELECTRONIC UPDATE

Contact Malcolm Wells on 0181-652 3620

A regular advertising feature enabling readers to obtain more information on companies' products or services.

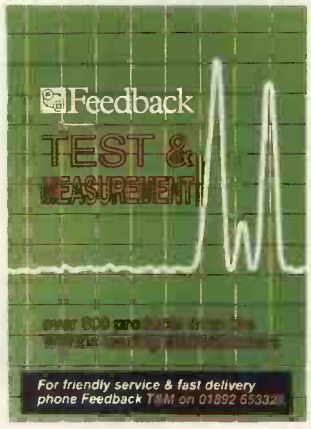

NEW Feedback T&M Catalogue

The latest edition of the Feedback Test & Measurement catalogue is now available. Over 60 pages packed with more than 800 products divided into over 20 sections. The catalogue is indexed for both product and manufacturer and is fully illustrated. Whether you are looking for an individual product, a complete workstation, or a solution to a particular Test & Measurement need the NEW Feedback catalogue will sove your problems, send for a copy NOW!

CIRCLE NO. 158 ON REPLY CARD

(GPIB BROCHURE) IEEE 488.2 INSTRUMENT CONTROL

Eight page brochure covers GPIB interfaces, support products, accessories, and software. Includes information on IEEE 488.2-compatible interfaces for your desktop PC, Macintosh or workstation, as well as the PCMCIA-GPIB interface, for notebook or laptop computers. These interfaces feature the TNT4882 and 4882C ASICs, which are also described. Application software and software drivers for numerous operating systems are discussed, in addition to the new HS488 high-speed GPIB handshake protocol.

NATIONAL INSTRUMENTS
For further information Freephone 0800 28987.

CIRCLE NO. 159 ON REPLY CARD

I DON'T BELIEVE IT!

This new 264 page Guide to SMDs now includes 64 pages of SM Connector Systems from AMP, JAE, Molex, Hirose, Oxley, Cinch and Sumitomo and mainly from stock as well.

Not only that but it's bulging with new SMDs from over 30 franchises which now include Panasonic. What an incredibly useful publication.

I had better ring 01530 510333 for my copy before they run out!

CIRCLE NO. 160 ON REPLY CARD

1995 MASTER PRODUCT CATALOGUE NOW OUT!

Test and instrument control solutions.
48 pages of full description and technical data on our own range of solutions to your PC and PS2 interfacing problems: IEEE488 (GPIB) * DIO * Timer/Counters * RS232 * RS422/485 * A/D * D/A * plus Opto Isolated versions. New Parallel/Serial RS232, Opto Dual RS232, Motion Control, Converter and Repeater for 1995!
ISO 9001 Quality guarantee ✓
UK design and manufacture ✓
36 month no-quibble warranty ✓
Telephone hotline support ✓
Competitive pricing on the page ✓
Intelligent solutions & friendly service ✓

BRAIN BOXES
Unit 3f Wavertree Boulevard South
Wavertree Technology Park
Liverpool L7 9PF
Tel: 0151 220 2500 Fax: 0151 252 0446

CIRCLE NO. 161 ON REPLY CARD

1000

More than 15.000 Users

HOW INTERACTIVE IS YOUR BOARD STRATEGY

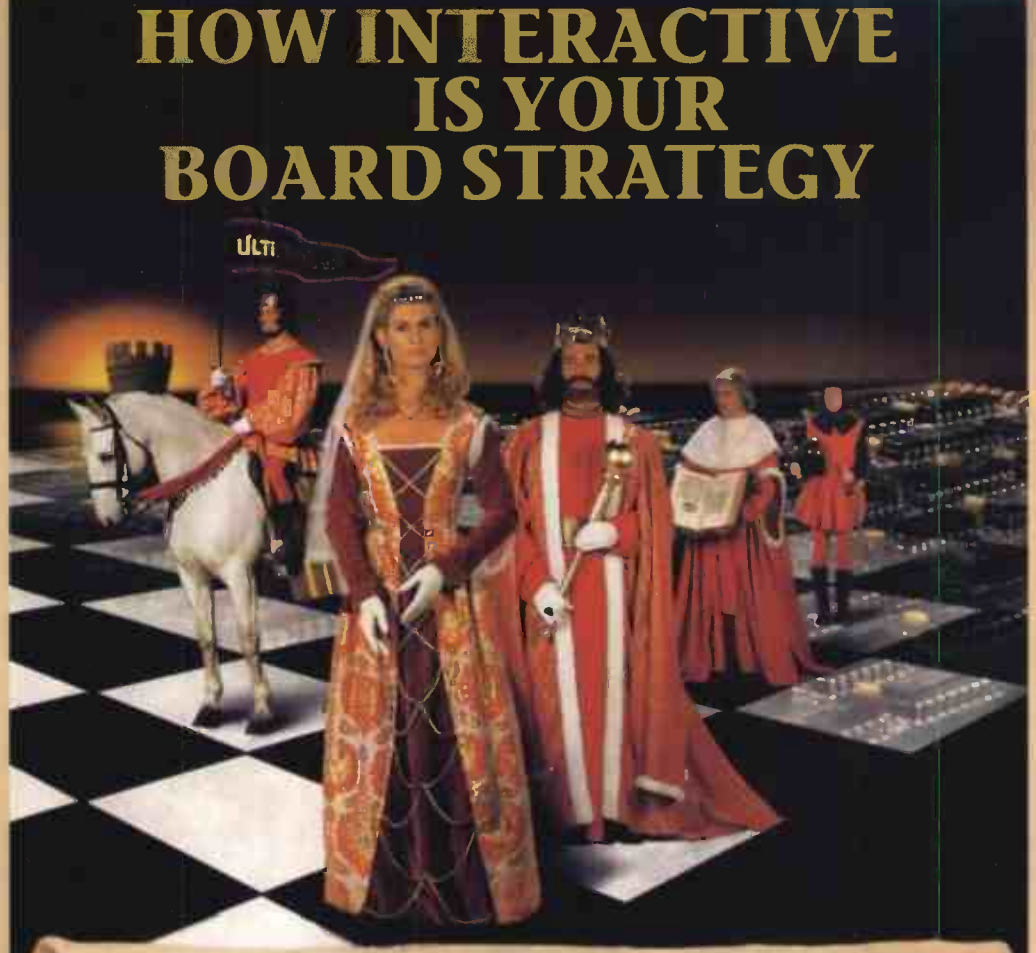

ULTIboard, one of the leading PC based design systems, is supplied worldwide via a network of ULTImate Technology offices & distributors. ULTIboard's success with professional designers is primarily due to its superior interactive functionality.

REAL TIME Placement Help, REAL TIME Design Rule Check, Reroute-While-Move and Trace shoving, are all features wich will dramatically reduce your design time.

Integration with ULTIcap guarantees smooth data flow between Schematic and PCB editing .The inclusion of third party netlist interfaces ensures ULTIboard will fit into any design environment.

Another of ULTImate Technology's strengths is our flexible growth path. Users may start with a low cost ULTIboard Challenger and grow, step by step, to a 32-bit Advanced Design system including Ripup and Retry Autorouting.

ULTImate Technology also looks after existing users. With valid maintenance they will be upgraded to a new system based on their original investment. For instance, a 1987 ULTIboard-DOS system has now been upgraded to a 32-bit Advanced system with 2 Autorouters. Regular User Meetings and -Surveys result in 2 major Updates per year.

ULTImate Technology not only adds value to your investment in a ULTIboard system but backs it up with the highest quality support from our distributors and offices.

Your move	*ULTIboard's move*
YOU want the best placement	In addition to dynamic rats nests, force vectors and density histograms, ULTIboard's **Direct Reconnect** instantly displays the shortest possible connections. **Automatic Gate- & Pin Swap** with full **Backannotation** guarantee the best.
YOU use SMD Technology	ULTIboard understands the different soldering techniques that apply to SMT. Flip your SMD to the other side of the board and ULTIboard **automatically** applies the pad definitions for either wave or reflow soldering.
YOU want 100% design integrity	Ultiboard **Real-Time DRC** does not allow you to accidently connect wrong pins or violate trace clearances. It always respects your design rules.
YOU want 100% automatic routing	The ULTIroute GXR Ripup & Retry Autorouter is able to remove connections that cause a block and automatically reroutes the removed connections. The user can define the Autorouter parameters.
YOU don't want Autorouters	ULTIboard's acknowledged powerful interactive features s.a. Reroute-While-Move and Trace-Shoving under **Real-Time DRC** guarantee flawless designs in the shortest time. But for non critical traces you can use our second Autorouter which blends in with your manualy routed traces to allow you to route per net, component or window.

SPECIAL OFFER

ULTIboard Entry Designer*

UK: £ 795

A complete, professional Design System with 1400 pin Design Capacity:ULTIcap Schematic Capture + ULTIboard Printed Circuit Board Design, including 2 autorouters, introduction & tutorial manuals, user manual, extensive Shape documentation in binder.

FREE UPGRADE TO WINDOWS-95 VERSION 5 AND EMC-EXPERT*!

FOR THE UNDECIDED

**List Price at release: UK: £ 1.890*

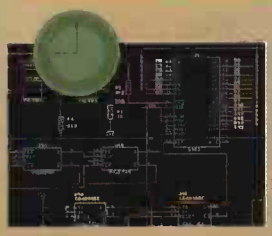

Your design ideas are quickly captured using the ULTIcap schematic design Tool. ULTIcap uses REAL-TIME checks to prevent logic errors. Schematic editing is painless; simply click your start and end points and ULTIcap automatically wires them for you. ULTIcap's auto snap to pin and auto junction features ensure your netlist is complete, thereby relieving you of tedious netlist checking.

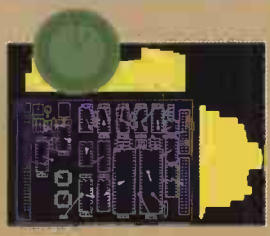

ULTIshell, the integrated user interface, makes sure all your design information is transferred correctly from ULTIcap to ULTIboard. Good manual placement tools are vital to the progress of your design, therefore ULTIboard gives you a powerful suite of REAL-TIME functions such as, FORCE VECTORS, RATS NEST RECONNECT and DENSITY HISTOGRAMS. Pin and gate swapping allows you to further optimise your layout.

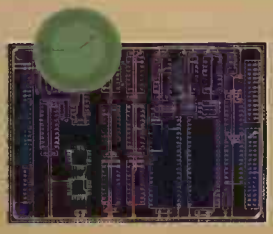

Now you can quickly route your critical tracks. ULTIboard's REAL-TIME DESIGN RULE CHECK will not allow you to make illegal connections or violate your design rules. ULTIboard's powerful TRACE SHOVE, and REROUTE-WHILE-MOVE algorithms guarantee that any manual track editing is flawless. Blind and buried vias and surface mount designs are fully supported.

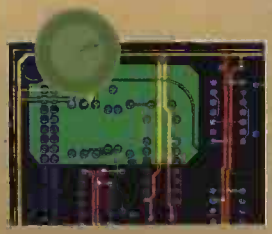

If you need partial ground planes, then with the Dos extended board systems you can automatically create copper polygons simply by drawing the outline. The polygon is then filled with copper of the desired net, all correct pins are connected to the polygon with thermal relief connections and user defined gaps are respected around all other pads and tracks.

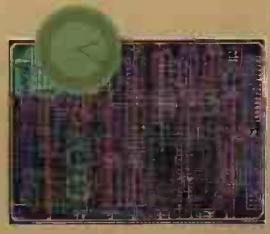

ULTIboard's autorouter allows you to control which parts of your board are autorouted, either selected nets, or a component, or a window of the board, or the whole board. ULTIboard's intelligent router uses copper sharing techniques to minimise route lengths. Automatic via minimisation reduces the number of vias to decrease production costs. The autorouter will handle up to 32 layers, as well as single sided routing.

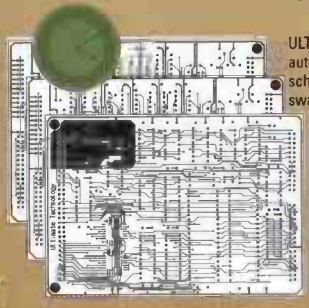

ULTIboard's backannotation automatically updates your ULTIcap schematic with any pin and gate swaps or component renumbering. Finally, your design is post processed to generate pen / photo plots, dot matrix/laser or postscript prints and custom drill files.

FROM CONCEPT TO ARTWORK IN 1 DAY

ULTIMATE TECHNOLOGY

Corporate Headquarters:
Energiestraat 36 • 1411 AT Naarden
The Netherlands
tel.: (+31) 35 - 6944444
fax: (+31) 35 - 6943345

UK/Ireland Sales-Office:
2 Bacchus House • Calleva Park
Aldermaston Berkshire • RG7 4QW
tel.: 01734 - 812030
fax: 01734 - 815323

CIRCLE NO. 102 ON REPLY CARD

Credit card holders - call now for special bundle deals.

The handiest programmer on earth

Here's why:

- Totally handheld programmer/emulator manufactured in the UK
- Fast approved programming algorithms; eg program and verify: National 27C512 in 16 seconds, AMD 29F010 in only 90 seconds
- EPROMS to 16Mbit, 5v, 12v and BOOT-BLOCK FLASH, EEPROMS and PEROMS
- Three year parts and labour guarantee
- Full 24 byte on-screen editor
- Continuous programming whilst charging (nonstop operation)
- Designer case - feels as good as it looks
- Big, easy-view 80 character supertwist LCD
- Optional modules available to program PIC (all 16/17 series), 8751, 16-bit EPROMs, MROM-EPROM, 16-bit FLASH, Toshiba 4-bit, Hitachi H8, SERIAL EEPROMS
- Optional sockets for programming and emulating PLCC devices

CIRCLE NO. 103 ON REPLY CARD

FREE software upgrades for life

FREE emulation leads

FREE Windows and DOS software

only £495 plus VAT

3 year guarantee
30 day free trial

4Mbit upgrade only £39 plus VAT

S4's 32 pin ZIF socket programs a huge library of 8 and 16-bit EPROMs, EEPROMS, FLASH, PICs and other popular microcontrollers using manufacturers approved algorithms.
Dataman *never* charge for updates or technical support, a vital factor in determining a cost-effective programing solution for the years ahead. Upgrading your S4's device library couldn't be simpler. As well as our high speed bulletin boards, we also offer full Internet access to our Home Page which contains all the latest software as well as hints and tips.
Built-in emulation enables you to see your code *before* commiting yourself to an EPROM.

Load your program from an EPROM or download code from your PC into S4's memory. Plug S4's emulation lead into the target system, press the emulation key and run the system. Changes can be made using S4's powerful editor, and you can re-run the code to test and confirm changes. When the code is proved to be working, it can then be programmed to a fresh ROM.
The S4 Package comes complete with mains charger, emulation leads, organiser-style instruction manual, Windows and DOS terminal software *and* a three year guarantee.
S4 is always available off the shelf and we ship worldwide on a daily basis. Call now for delivery tomorrow.

Bona-fide UK customers can try S4 for thirty days without risk.
24,000 engineers worldwide can't be wrong!

dataman

Dataman Programmers Ltd
Station Road, Maiden Newton,
Dorset DT2 OAE, UK
Tel: 01300 320719 Fax: 01300 321012
Telex: 418442 BBS: 01300 321095
Modem: V.34/V.FC/V.32bis

22 Lake Beauty Drive, Suite 101
Orlando, FL 32806, USA
Tel: (407) 649-3335 Fax: (407) 649-3310
BBS: (407) 649-3159 24hr
Modem: V.34/V.FC/V.32bis

Via the Internet:
Home Page: http://www.dataman.com
FTP access: ftp.dataman.com
Email: sales@dataman.com

CREDIT CARD HOTLINE 01300 320719 for same-day dispatch

DATAMAN PROGRAMMERS