KACO new energy.

KACO blueplanet 87.0 TL3
KACO blueplanet 92.0 TL3
KACO blueplanet 105 TL3
KACO blueplanet 110 TL3
KACO blueplanet 125 TL3
KACO blueplanet 137 TL3
KACO blueplanet 150 TL3
KACO blueplanet 155 TL3
KACO blueplanet 165 TL3

Manual
■English translation of German original

⚠ Authorised electrician

Important safety instructions

These instructions form part of the product and must be carefully read, observed and stored in a place which is freely accessible at all times.

EN

Legal provisions

The information contained in this document is the property of KACO new energy GmbH. Publication, in whole or in part, requires the written permission of KACO new energy GmbH.

KACO warranty

For current warranty conditions contact your system integrator. http://www.kaco-newenergy.com

Definitions on product designations

In these operating instructions, the product "Photovoltaic feed-in inverter" is referred to as "device" for ease of reading.

Trademarks

All trademarks are recognised, even if not explicitly identified as such. A lack of identification does not mean that a product or designation/logo is free of trademarks.

Software

This device contains open source software developed by third parties and in some cases licensed under GPL and/or LGPL.

More details on this topic and a list of the open source software used, as well as the corresponding licence texts, can be found in the web interface information display under "Licence List".

KACO new energy.

EN

Photovoltaic feed-in inverter

Contents

1 General information ... 4
- 1.1 About this document ... 4
- 1.2 More information ... 5
- 1.3 Layout of Instructions ... 5
- 1.4 Identification ... 6
- 1.5 Warnings on the device ... 6
- 1.6 Target group ... 7

2 Safety ... 8
- 2.1 Proper use ... 8
- 2.2 Protection features ... 9

3 Description of the device ... 10
- 3.1 Mode of operation ... 10
- 3.2 Device diagram ... 10
- 3.3 System layout ... 12

4 Technical data ... 13
- 4.1 Electrical data ... 13
- 4.2 General Data ... 15
- 4.3 Environmental data ... 16
- 4.4 Accessories ... 17

5 Transportation and Delivery ... 18
- 5.1 Scope of delivery ... 18
- 5.2 Transporting the device ... 18
- 5.3 Installation tool ... 18

6 Assembly and preparation ... 19
- 6.1 Choosing the installation location ... 19
- 6.2 Unpacking the device ... 20
- 6.3 Fastening the mount ... 21
- 6.4 Installing and securing the device ... 22

7 Installation ... 24
- 7.1 General information ... 24
- 7.2 Opening the device ... 24
- 7.3 Surveying the connection area ... 25
- 7.4 Making the electrical connection ... 25
- 7.5 Connecting the device to the power grid ... 26
- 7.6 Connect PV generator to device ... 27
- 7.7 Inserting the overvoltage protection ... 31
- 7.8 Creating equipotential bonding ... 32
- 7.9 Connecting the interfaces ... 32
- 7.10 Sealing the connection area ... 36

8 Commissioning ... 37
- 8.1 Requirements ... 37
- 8.2 Preconditions relating to standards ... 37
- 8.3 Network topologies ... 38
- 8.4 Start-up options ... 39

9 Configuration and operation ... 47
- 9.1 Initial start-up ... 47
- 9.2 Controls ... 47
- 9.3 User interface ... 48
- 9.4 Menu structure ... 51
- 9.5 Monitoring the device ... 70
- 9.6 Performing a firmware update ... 70
- 9.7 Access via Modbus ... 71
- 9.8 Multi-function button ... 71

10 Specifications ... 74
- 10.1 Reactive power control ... 74
- 10.2 Active power regulation ... 80
- 10.3 FRT ... 87
- 10.4 Other grid-supporting functions that are effective in the case of active power ... 91
- 10.5 Advanced islanding detection ... 93

11 Maintenance and troubleshooting ... 94
- 11.1 Visual inspection ... 94
- 11.2 Cleaning ... 94
- 11.3 Replacing the fan ... 95
- 11.4 Replacing overvoltage protection ... 96
- 11.5 Shutting down for maintenance / troubleshooting ... 97
- 11.6 Disconnecting connections ... 97
- 11.7 Faults ... 97
- 11.8 Fault messages ... 99
- 11.9 Troubleshooting ... 99

12 Decommissioning and dismantling ... 112
- 12.1 Switching off the device ... 112
- 12.2 Uninstalling the device ... 112
- 12.3 Disassembling the device ... 112
- 12.4 Packaging the device ... 113
- 12.5 Storing the device ... 113

13 Disposal ... 114

14 Service and warranty ... 115

EN

1 General information

1.1 About this document

⚠ WARNING

Improper handling of the device can be hazardous!

1. You must read and understand the operating instructions in order to install and use the device safely!

Other applicable documents

During installation, observe all assembly and installation instructions for components and other parts of the system. These instructions also apply to the equipment, related components and other parts of the system.

Some of the documents which are required to register your system and have it approved are included with the operating instructions.

Storing the documents

These instructions and other documents must be stored near the system and be available at all times.

– The current version of the operating Instructions can be downloaded from www.kaco-newenergy.com.

English translation of German original

This document has been produced in several languages. The German-language version is the original version. All other language versions are translations of the original version.

This document is valid for the following types of device from firmware version V2.0x onwards

Modules *[KACO art. no.]*	KACO blueplanet 87.0 TL3 M1 WM OD IIF0 / KACO blueplanet 87.0 TL3 M1 WM OD IIFX	[1001784 / 1001897]
	KACO blueplanet 92.0 TL3 M1 WM OD IIG0 / KACO blueplanet 92.0 TL3 M1 WM OD IIGX	**[1001785 / 1001898]**
	KACO blueplanet 110 TL3 M1 WM OD IIK0 / KACO blueplanet 110 TL3 M1 WM OD IIKX	[1001786 / 1001892]
	KACO blueplanet 125 TL3 M1 WM OD IIP0 / KACO blueplanet 125 TL3 M1 WM OD IIPX	**[1001623 / 1001894]**
	KACO blueplanet 137 TL3 M1 WM OD IIP0 / KACO blueplanet 137 TL3 M1 WM OD IIPX	**[1001787 / 1001895]**
	KACO blueplanet 150 TL3 M1 WM OD IIQ0 / KACO blueplanet 150 TL3 M1 WM OD IIQX	**[1001783 / 1001896]**

Modules *[KACO art. no.]*	KACO blueplanet 87.0 TL3 M1 WM OD IIF0 / KACO blueplanet 87.0 TL3 M1 WM OD IIFX	**[1001784 / 1001897]**
	KACO blueplanet 92.0 TL3 M1 WM OD IIG0 / KACO blueplanet 92.0 TL3 M1 WM OD IIGX	**[1001785 / 1001898]**
	KACO blueplanet 105TL3 M1 WM OD IIG0 / KACO blueplanet 105TL3 M1 WM OD IIGX	**[1001941 / 1001951]**
	KACO blueplanet 110 TL3 M1 WM OD IIK0 / KACO blueplanet 110 TL3 M1 WM OD IIKX	**[1001786 / 1001892]**
	KACO blueplanet 125 TL3 M1 WM OD IIP0 / KACO blueplanet 125 TL3 M1 WM OD IIPX	**[1001623 / 1001894]**
	KACO blueplanet 125TL3 M1 WM OD IIK0/ KACO blueplanet 125TL3 M1 WM OD IIKX	**[1001942 / 1001952]**
	KACO blueplanet 137 TL3 M1 WM OD IIP0 / KACO blueplanet 137 TL3 M1 WM OD IIPX	**[1001787 / 1001895]**
	KACO blueplanet 150 TL3 M1 WM OD IIQ0 / KACO blueplanet 150 TL3 M1 WM OD IIQX	**[1001783 / 1001896]**

	KACO blueplanet 155TL3 M1 WM OD IIP0/ KACO blueplanet 155TL3 M1 WM OD IIPX	**[1001943 / 1001953]**
	KACO blueplanet 165TL3 M1 WM OD IIQ0 / KACO blueplanet 165TL3 M1 WM OD IIQX	**[1001944 / 1001954]**

EN

1.2 More information

Links to more detailed information can be found at www.kaco-newenergy.com

Document title	Document type
Technical data sheet	Product flyer
Remote access via web interface	Application note - operation
Modbus protocol RS485 protocol reactive power control	Application note
SunSpec Information Model Reference SunSpec Information Model Reference KACO	Excel files for software version with application note “Modbus protocol” under https://kaco-newenergy.com/downloads/
Software package	ZIP/KUF files for current software
EU Declaration of Conformity Country-specific certificates Certification for specific subassembly	Certificates

1.3 Layout of Instructions

1.3.1 Symbols used

	General hazard		Fire and risk of explosion
	Electrical voltage		Risk of burns
	Earthing - ground conductor		

1.3.2 Safety warnings symbols guide

⚠ DANGER

High risk

Failure to observe this warning will lead directly to serious bodily injury or death.

⚠ WARNING

Potential risk

Failure to observe this warning may lead to serious bodily injury or death.

⚠ CAUTION

Low-risk hazard

Failure to observe this warning will lead to minor or moderate bodily injury.

EN

⚠ CAUTION

Risk of damage to property

Failure to observe this warning will lead to property damage.

1.3.3 Additional information symbols

NOTE

Useful information and notes

Information that is important for a specific topic or objective, but that is not safety-relevant.

1.3.4 Symbols for instructions

↻ Prerequisite for use

1. Carry out the next step
2. Additional action sequence
   ⇨ Interim result of the action

⇨ End result

1.4 Identification

You will find the name plate with the following data for service and other requirements specific to installation on the right side panel of the product:

- Product name
- Part no.
- Serial number
- Date of manufacture
- Technical data
- Disposal information
- Certification marking, CE marking.

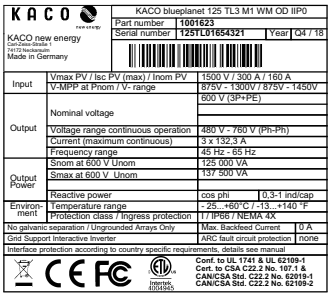

Fig. 1: Name plate

1.5 Warnings on the device

A warning sticker is affixed to the device. Read the warnings carefully.

Do not remove the sticker. If the sticker is missing or is illegible, please contact a KACO representative or distributor.

- Article number: 3013153

Fig. 2: Warning sticker

EN

1.6 Target group

All activities described in the document may only be carried out by specially trained personnel with the following qualifications:

- Knowledge about how an inverter functions and operates
- Training in the handling of hazards and risks during the installation and operation of electrical devices and systems.
- Education concerning the installation and start-up of electrical devices and systems.
- Knowledge of applicable standards and directives.
- Knowledge and adherence to this document with all safety notices.

EN

2 Safety

Before using the product for the first time, please read through the safety instructions carefully.

⚠ DANGER

Lethal voltages are still present in the connections and cables of the device even after the device has been switched off and disconnected!

Severe injuries or death may occur if the cables and/or terminals/busbars in the device are touched.

1. The device must be mounted in a fixed position before being connected electrically.
2. Comply with all safety regulations and current technical connection specifications of the responsible power supply company.
3. The device is only permitted to be opened or serviced by a qualified electrician.
4. Switch off the grid voltage by turning off the external circuit breakers.
5. Check that all AC and DC cables are completely free of current using a clip-on ammeter.
6. Do not touch the cables and/or terminals/busbars when switching the device on and off.
7. Keep the device closed when in operation.

The electrician is responsible for observing all existing standards and regulations. The following applies:

- Keep unauthorised persons away from the device and/or system.
- In particular, making sure that the locally applicable version of the standard [1] "Requirements for special installations or locations – solar photovoltaic (PV) power supply systems" is observed.
- Ensure operational safety by providing proper grounding, conductor dimensioning and appropriate protection against short circuiting.
- Observe all safety instructions on the product and in these operating instructions.
- Switch off all voltage sources and secure them against being inadvertently switched back on before performing visual inspections and maintenance.
- When taking measurements on the live device:
  - Do not touch the electrical connections
  - Remove all jewellery from wrists and fingers
  - Ensure that the testing equipment is in safe operating condition.
- Modifications to the surroundings of the device must comply with the applicable national and local standards.
- When working on the PV generator, it is also necessary to switch off the DC voltage with the external DC isolator switch (e.g. at the string combiner or the KACO DC switchbox) in addition to disconnecting the PV generator from the grid.

2.1 Proper use

The device is a transformerless PV inverter which converts the direct current of the PV generator into grid-compatible three-phase alternating current and then feeds the three-phase alternating current into the public power grid.

The device is built using state-of-the-art technology and in accordance with the recognized safety rules. Nevertheless, improper use may cause lethal hazards for the operator or third parties, or may result in damage to the product and other property.

[1]

Country	Standard
EU	Harmonised document - HD 60364-7-712 (European implementation of the IEC standard)
USA	PV section of NEC 690 and sections in article 100, 690.4, 690.6 and 705.10

Tab. 1: Examples of standards specific to business premises

EN

The device is intended for indoor and outdoor applications and may only be used in countries for which it has been approved or for which it has been released by KACO new energy and the grid operator.

Operate the device only with a permanent connection to the public power grid. The country and grid type selection must be commensurate with the respective location and grid type.

The requirements of the grid operator must be met for grid connection to take place. The permission of the relevant authorities may also be required in order to secure authorisation to connection to the grid.

The enclosed documentation is an integral part of the product. The documentation must be read, observed and stored in a place which is freely accessible at all times.

The name plate must be permanently attached to the product.

Any other or additional use of the device shall be regarded as improper.

This includes:

- Use of a distribution system that is not described (grid type)
- Use of sources other than PV-strings.
- Mobile use
- Use in rooms where there is a risk of explosion
- Use in direct sunlight, rain or a storm or other harsh environmental conditions
- Outdoor use in environmental conditions that exceed the limits stated in the technical specifications >Environmental data.
- Operation outside the specification intended by the manufacturer
- Overvoltage on the DC connection of over 1,500 V
- Modifying the device
- Standalone mode

2.2 Protection features

The following monitoring and protection functions are built-in:

- Overvoltage conductor / varistor to protect the power semiconductors from high-energy transients on the grid and generator sides.
- Device temperature monitoring system
- EMC filter to protect the inverter from high-frequency grid interference
- Grid-side varistors grounded to earth to protect the product against burst and surge pulses
- Anti-islanding detection according to the current standards.
- Isolation detection / residual current monitoring and disconnection function to detect isolation faults

NOTE

If the device is connected, the overvoltage conductors / varistors contained in the device have an impact on the electrical system insulation resistance test as per HD 60364-6 / IEC 60364-6 Low-voltage installations- Part 6: Verification.

IEC 60364-6 6.4.3.3 describes two options for this case. The first option is to disconnect devices with an overvoltage conductor or, if this is not practicable, then the test voltage can be reduced to 250V.

EN

3 Description of the device

3.1 Mode of operation

The device converts the DC voltage generated by the PV-modules into AC voltage and feeds this into the power grid. The starting procedure begins when there is sufficient sunlight and a specific minimum voltage is present in the device. The feed-in process begins once the PV generator has passed the insulation test and the grid parameters are within the requirements imposed by the grid operator for a specific monitoring time. If, as it gets dark, the voltage drops below the minimum voltage value, feed-in mode ends and the device switches off.

3.2 Device diagram

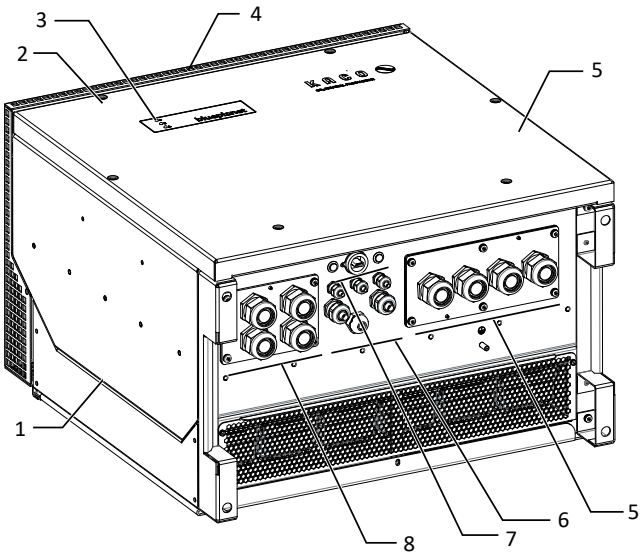

Fig. 3: Device diagram - S version

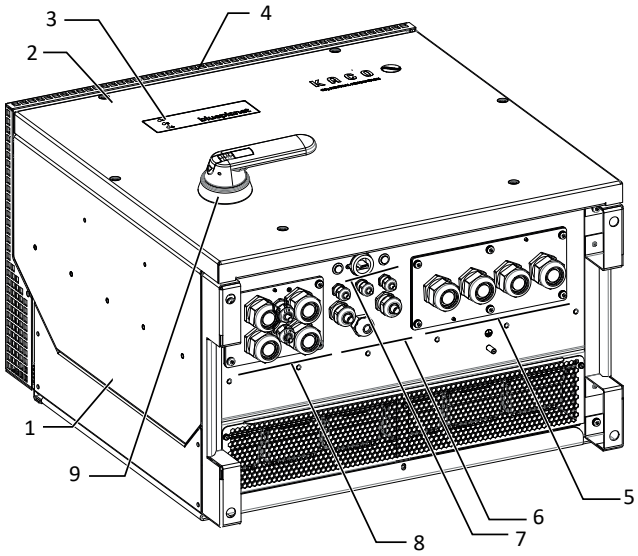

Fig. 4: Device diagram - XL version

Key

1	Housing	6	Interface / cable feed-through
2	Cover	7	Communication - button / USB port
3	Status indicator	8	DC connection / cable feed-through
4	Upper cover	9	DC isolator switch (not present in S version)
5	AC connection / cable feed-through		

3.2.1 Mechanische Komponenten

DC isolator switch (not present in S version)

The DC isolator switch is located on the housing door. of the device. The DC isolator switch is used to disconnect the inverter from the PV generator in order to carry out service.

Disconnecting the device from the PV generator

☞ Switch the DC isolator switches from 1 (ON) to 0 (OFF).

Connecting the device to the PV generator

☞ Switch the DC isolator switches from 0 (OFF) to 1 (ON).

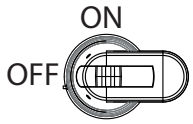

Fig. 5: DC isolator switch

3.2.2 Electrical functions

A potential-free relay contact is integrated into the device. Use this contact for one of the following functions:

EN

Potential-free relay

The potential-free relay contact closes as soon as there is a fault during operation. You use this function, for example, to signal a fault visually or acoustically.

3.2.3 Interfaces

You can configure the interfaces and the web server in the Settings menu. The device has the following interfaces for communication and remote monitoring.

Ethernet interface

The device features two switched Ethernet ports to enable the user to, for example, connect several devices in series if the user prefers a linear topology.

RS485 interface

The device features two RS485-Interfaces. One RS485-Interface is earmarked for communication with a string-combiner-box. This can be controlled using the Modbus RTU protocol. Data loggers that cannot be connected via Ethernet can be connected to the other RS485-Interface. The Sunspec and KACO protocol are supported in this case.

USB interface

The USB connection of the device is a type A socket. It is located on the communication circuit board. The USB connection is specified to draw 500 mA of current.

Use the USB interface to read out stored operating data, load software updates or device configurations using a FAT32-formatted USB stick.

It is possible to establish a connection to the webserver integrated into the device by connecting a USB-WiFi stick. In addition to starting up the device, the web interface can be used for service information purposes, software updates and for carrying out extensive configuration.

„Inverter Off“ Eingang / DRM0 for Australia

In addition to the safety functions, the internal interface switches can also be actuated via the "Inverter Off" input.

The Powador-protect or a protective device from another manufacturer can be used for this purpose.

If a Powador-protect is used as the central interface protection, the fail-safe disconnection of suitable KACO inverters from the public grid can be carried out by the internal interface switches instead of separate interface switches. This requires the inverters in the photovoltaic system to be connected to the Powador-protect.

Information on installation and use can be found in this manual, in the Powador protect manual and in the instructions for use of the Powador protect on the KACO web site.

On the "Inverter Off" input, instead of the Powador-protect an interface protection device from another supplier an also be connected to actuate the internal interface switches.

Digital inputs

You can extend the unit with additional digital inputs by means of an extension module (available from KACO customer service). This can be used to connect a ripple control receiver or a protective shutdown system.

EN

3.3 System layout

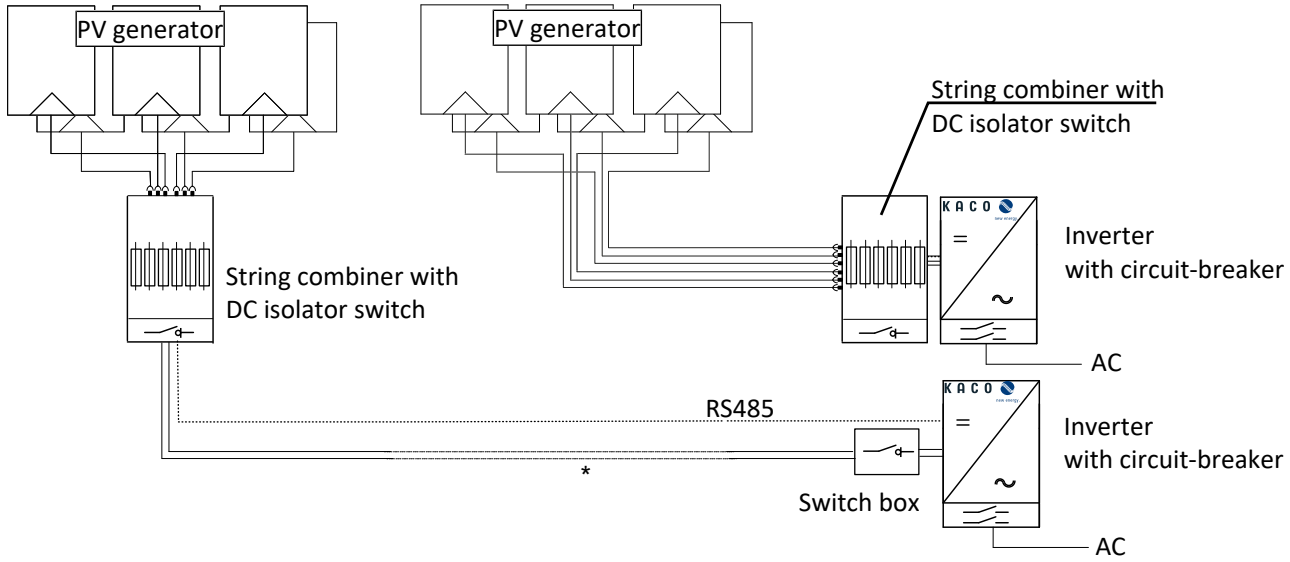

Fig. 6: Circuit diagram with a short or long supply cable to the inverter

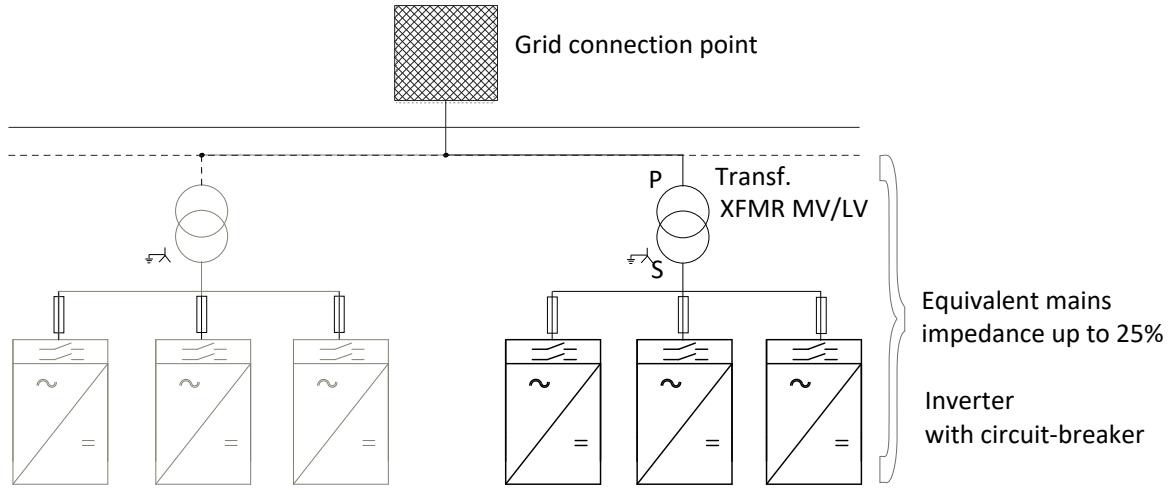

Fig. 7: Circuit diagram from the grid connection point to the inverter

Key	Definition / information on the connection
PV generator	The PV generator converts the radiant energy of sunlight into electrical energy.
String combiner	A string combiner can be coupled to the KACO device so that the DC lines can be combined. *) If the supply cable from the PV generator to the device is long, the string combiner can also be installed in the vicinity of the PV generator. An integrated DC isolator switch enables disconnection on the DC-side.
Switch box	A switch box with integrated DC isolator switch enables disconnection from the inverter on the DC-side.
Inverter with circuit-breaker	The PV generator is connected to the device's DC connection.
Transformer	All three phases need to be set up on the medium-voltage transformer or medium-voltage/high-voltage transformer. In this case, the total impedance of the transformer stations must be below 25%.
Grid connection point	The clean PV-current is made available at the grid connection point.

EN

4 Technical data

4.1 Electrical data

	KACO blue-planet 87.0TL3	KACO blue-planet 92.0TL3	KACO blue-planet 110TL3	KACO blue-planet 125TL3	KACO blue-planet 137TL3	KACO blue-planet 150TL3
Recommended generator power range	130.5 kW	138 kW	165 kW	187.5 kW	205.5 kW	225 kW
MPPrange@Pnom	563 V - 1300 V	591 V-1,300 V	705 V-1,300 V	875 V-1,300 V	875 V -1,300 V	960 V-1,300 V
Working range	563 V - 1450 V	591 V-1,450 V	705 V-1,450 V	875 V -1,450 V	875 V -1450 V	960 V-1,450 V
Rated voltage	600 V	620 V	730 V	900 V		1,000 V
Starting voltage	645 V	675 V	805 V	1,000 V		1,100 V
Open circuit voltage [2]	1,500 V					
Max. input current [3]	160 A					
Number of strings	1-2					
Number of MPP controls	1					
Max. short-circuit current (ISC max.)	300 A					300A
Input source feedback current	0 A					
Polarity safeguard	no					
String fuse	no					
DC overvoltage protection	Yes					

	KACO blueplanet 105TL3	KACO blueplanet 125 TL3 US	KACO blueplanet 155TL3	KACO blueplanet 165TL3
Recommended generator power range	157.5 kW	187.5 kW	232.5 kW	247.5 kW
MPPrange@Pnom	580 V-1,300 V	700 V-1,300 V	875 V-1,300 V	950 V-1,300 V
Working range	591 V-1,450 V	705 V-1,450 V	875 V-1,450 V	960 V-1,450 V
Rated voltage	620 V	730 V	900 V	1,000 V
Starting voltage	673 V	804 V	1,000 V	1,098 V
Open circuit voltage [2]	1,500 V			
Max. input current [3]	183 A			
Number of strings	1-2			
Number of MPP controls	1			
Max. short-circuit current (ISC max.)	300 A			

[2] A brief open circuit voltage of up to 1600 V_{dc} (max. 15 hours a year) is admissible for the device.

Due to the brief open circuit voltage exceedance, there is no guarantee that the integrated over-voltage protection will work correctly if the ambient temperature is > 40°C.

[3] The "Max. input current" is the maximal theoretical value during operation at full power and minimal MPP voltage. The inverter will clip to the maximum AC power output.

The "Max. short-circuit current (ISCmax.)" defines together with open circuit voltage (Uocmax) the characteristic of the connected PV generator. This is the relevant value for string sizing and is the absolute maximal limit for inverter protection. The connected PV-Generator must be designed, that the max short circuit current is below or equal to ISCmax of the inverter under all foreseeable conditions. In no condition the design may result in a greater short circuit current than ISCmax of the inverter.Designing the PV generator [See section 7.6.2 Page 28].

EN

	KACO blueplanet 105TL3	KACO blueplanet 125 TL3 US	KACO blueplanet 155TL3	KACO blueplanet 165TL3
Input source feedback current	0 A			
Polarity safeguard	no			
String fuse	no			
DC overvoltage protection	Yes			

	KACO blue-planet 87.0TL3	KACO blue-planet 92.0TL3	KACO blue-planet 110TL3	KACO blue-planet 125TL3	KACO blue-planet 137TL3	KACO blue-planet 150TL3
AC Output levels	Output levels (AC)					
Nominal power	87 kVA	92 kVA	110 kVA	125 kVA	137 kVA	150 kVA
Rated voltage	380 V (3P+PE)	400 V (3P+PE)	480 V (3P+PE)	600 V [3P+PE]		660 V (3P+PE)
Voltage range: continuous operation	300 V - 437 V	300 V - 460 V	300 V - 552 V	480 V - 690 V		480 V - 760 V
Rated current	3 x 132.3 A	3 x 132.3 A	3 x 132.3 A	3 x 120.3 A	3 x 132.3 A	3 x 131.2 A
Max. continuous current	3 x 132.3 A					
Contribution to peak short-circuit current ip	193 A					
Initial short-circuit alternating current (Ik" first single period effective value)	137 A					
Short circuit current continu-ous [ms] (max output fault current)	134 A					
Inrush current	5 A [RMS (20ms)]					
Rated frequency	50/60 Hz					
Frequency range	45 - 65 Hz					
Reactive power	0-100 % Snom					
cos phi	1 - 0.3 ind/cap					
Number of feed-in phases	3					
Distortion factor (THD)	< 3 %					2.8 %
Max. voltage range (up to 100 s)	475 V	500 V	600 V	750 V		825 V
AC overvoltage protection	Base					

	KACO blueplanet 105TL3	KACO blueplanet 125 TL3 US	KACO blueplanet 155TL3	KACO blueplanet 165TL3
AC Output levels	Output levels (AC)			
Nominal power	99.9 kVA	125 kVA	155 kVA	165 kVA
Rated voltage	380 V [3P+PE] ; 400 V [3P+PE]; 415 V [3P+PE]	480 V (3P+PE)	600 V [3P+PE]	660 V (3P+PE)
Voltage range: continuous op-eration	300 V - 478 V	300 V - 552 V	480 V - 690 V	480 V - 760 V
Rated current	3 x 144.5 A	3 x 150.5 A	3 x 149.5 A	3 x 144.5 A
Max. continuous current	3 x 152 A A			
Contribution to peak short-cir-cuit current ip	193 A			
Initial short-circuit alternating current (Ik" first single period effective value)	137 A			

EN

	KACO blueplanet 105TL3	KACO blueplanet 125 TL3 US	KACO blueplanet 155TL3	KACO blueplanet 165TL3
Short circuit current continuous [ms] (max output fault current)	134 A			
Inrush current	5 A [RMS (20ms)]			
Rated frequency	50/60 Hz			
Frequency range	45 - 65 Hz			
Reactive power	0-100 % Snom			
cos phi	1 - 0.3 ind/cap			
Number of feed-in phases	3			
Distortion factor (THD)	< 3 %			3 %
Max. voltage range (up to 100 s)	519 V	600 V	750 V	825 V
AC overvoltage protection	Base			

4.2 General Data

	KACO blueplanet 87.0TL3	KACO blueplanet 92.0TL3	KACO blueplanet 110TL3	KACO blueplanet 125TL3	KACO blueplanet 137TL3	KACO blueplanet 150TL3
General electrical data						
Max. efficiency	99.0 %	98.8 %	99.1 %	99.2 %		
European efficiency	98.6 %	98.5 %	98.8 %	99.0 %		
Self consumption: Standby	< 10 W					
Feed-in from	> 200 W					
Transformer unit	no					
Protection class / over voltage category	I / III					
Grid monitoring	Country-specific					
Distribution system	TN-C system, TT system, Solid grounded wye					

	KACO blueplanet 105TL3	KACO blueplanet 125 TL3 US	KACO blueplanet 155TL3	KACO blueplanet 165TL3
General electrical data				
Max. efficiency	98.8 %	99.1 %	99.2 %	
European efficiency	98.5 %	98.8 %	99.0 %	
Self consumption: Standby	< 10 W			
Feed-in from	> 200 W			
Transformer unit	no			
Protection class / over voltage category	I / III			
Grid monitoring	Country-specific			
Distribution system	TN-C system, TT system, Solid grounded wye			

	KACO blueplanet 87.0TL3	KACO blueplanet 92.0TL3	KACO blueplanet 110TL3	KACO blueplanet 125TL3	KACO blueplanet 137TL3	KACO blueplanet 150TL3
General Data						
Display	LEDs					
Controls	Button / web server					
Menu languages	EN; DE; FR; IT; ES; PL; NL; PT; CZ; HU; SL; TR; RO					

EN

	KACO blue-planet 87.0TL3	KACO blue-planet 92.0TL3	KACO blue-planet 110TL3	KACO blue-planet 125TL3	KACO blue-planet 137TL3	KACO blue-planet 150TL3
Interfaces	2 x Ethernet, USB, 2x RS485 (1x reserviert für Stringcombiner Kom.), optional					2 x Ethernet, USB, 2x RS485 (1x reserved for string combiner com.), optional
Communication	TCP/IP, Modbus TCP, Sunspec					
Potential-free relay	yes (integrated switch)					
DC isolator switch	no / yes (XL version)					
AC isolator switch	no					
Cooling	temp. regulated fan, max air throughput 364 m³/h					
Number of fans	3x outside, 1x inside					
Noise emission	<60 db(A)					
Housing material	AL					
HxWxD	719 mm x 699 mm x 460 mm					
Weight	78.2 kg					
Certifications	Overview: see homepage, download area					

	KACO blueplanet 105TL3	KACO blueplanet 125 TL3 US	KACO blueplanet 155TL3	KACO blueplanet 165TL3
General Data				
Display	LEDs			
Controls	Button / web server			
Menu languages	EN; DE; FR; IT; ES; PL; NL; PT; CZ; HU; SL; TR; RO			
Interfaces	2 x Ethernet, USB, 2x RS485 (1x reserved for string combiner com.), optional			
Communication	TCP/IP, Modbus TCP, Sunspec			
Potential-free relay	yes (integrated switch)			
DC isolator switch	no / yes (XL version)			
AC isolator switch	no			
Cooling	temp. regulated fan, max air throughput 364 m³/h			
Number of fans	3x outside, 1x inside			
Noise emission	<60 db(A)			
Housing material	AL			
HxWxD	719 mm x 699 mm x 460 mm			
Weight	78.2 kg			
Certifications	Overview: see homepage, download area			

4.3 Environmental data

	KACO blue-planet 87.0TL3	KACO blue-planet 92.0TL3	KACO blue-planet 110TL3	KACO blue-planet 125TL3	KACO blue-planet 137TL3	KACO blue-planet 150TL3
Installation height	3000m (derating from 2000m)					
Installation distance from coast	>500 m					> 500 m
Ambient temperature	-25 °C - 60 °C					-25 °C - +60 °C
Ambient temperature (storage)	-25 °C - 60 °C					-25 °C - +60 °C

EN

	KACO blue-planet 87.0TL3	KACO blue-planet 92.0TL3	KACO blue-planet 110TL3	KACO blue-planet 125TL3	KACO blue-planet 137TL3	KACO blue-planet 150TL3
Power derating from	> 45 °C					
Protection rating (KACO installation location)	IP66 /NEMA 4X					
Humidity range (non-condensing) [%]	100%					

	KACO blue-planet 105TL3	KACO blueplanet 125 TL3 US	KACO blueplanet 155TL3	KACO blue-planet 165TL3
Installation height	3000m (derating from 2000m)			
Installation distance from coast	> 500 m			
Ambient temperature	-25 °C - +60 °C			
Ambient temperature (storage)	-25 °C - +60 °C			
Power derating from	> 35 °C			
Protection rating (KACO installation location)	IP66 /NEMA 4X			
Humidity range (non-condensing) [%]	100%			
Item number	1001941 / 1001951	1001942 / 1001952	1001943 / 1001953	1001944 / 1001954
Name on nameplate	KACO blueplanet 105TL3 M1 WM OD IIG0 / KACO blue-planet 105TL3 M1 WM OD IIGX	KACO blueplanet 125TL3 M1 WM OD IIK0/KACO blue-planet 125TL3 M1 WM OD IIKX	KACO blueplanet 155TL3 M1 WM OD IIP0/KACO blue-planet 155TL3 M1 WM OD IIPX	KACO blueplanet 165TL3 M1 WM OD IIQ0 / KACO blue-planet 165TL3 M1 WM OD IIQX

4.4 Accessories

Accessory articles	KACO order no.
Bending box	1001917
AC inverter input plate kit	1001882 (double row) / 1001906 (M63/32)
AC inverter overvoltage protection kit	1001884
AC inverter overvoltage protection kit	1001884
DC inverter overvoltage protection kit	1001885
LAN inverter overvoltage protection kit	1001886
RS485 inverter overvoltage protection kit	1001887
PID connection set	1001888
WLAN adapter, Digitus 150N micro	3013222

EN

5 Transportation and Delivery

Every product leaves our factory in perfect electrical and mechanical condition. Special packaging ensures that the devices are transported safely. The shipping company is responsible for any transport damage that occurs.

5.1 Scope of delivery

- Inverter
- Mount
- Installation kit
- Manual [online] / operating instructions [multi-language]

Check the equipment included

1. Inspect the device thoroughly.
2. Immediately notify the shipping company in case of the following:
   - Damage to the packaging that indicates that the device may have been damaged.
   - Obvious damage to the device.
3. Send a damage report to the shipping company immediately.
4. The damage report must be received by the shipping company in writing within six days following receipt of the device. We will be glad to help you if necessary.

5.2 Transporting the device

⚠ CAUTION

Hazard due to impact; risk of breakage to the device!

1. Pack the device securely for transport.
2. Transport the device using the intended carrying handles of the packaging box.
3. Do not expose the device to any shocks.

For safe transportation of the product, use the hand recesses in the carton.

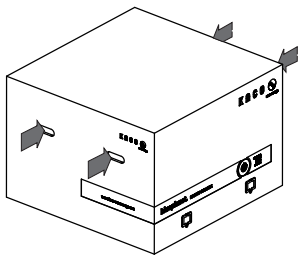

Fig. 8: Transporting the device

Packaging	Folding cardboard box
Height x Width x Depth	790x760x550 mm
Total weight	83 kg

5.3 Installation tool

The codes given in the table below are used in all usage instructions for assembly/installation/maintenance and disassembly for the tools and tightening torques being used.

Code (s)	Shape of the connector
W	External hexagon
A	Internal hexagon
T	Torx
S	Slot

Tab. 2: Key and description of tool codes

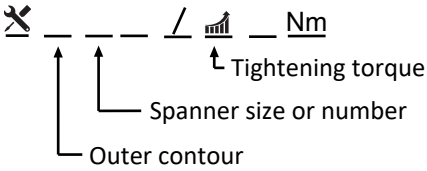

Fig. 9: Form pattern

EN

6 Assembly and preparation

6.1 Choosing the installation location

⚠ DANGER

Risk of fatal injury due to fire or explosions!

Fire caused by flammable or explosive materials in the vicinity of the device can lead to serious injuries.

1. Do not mount the inverter in potentially explosive atmospheres or in the vicinity of highly flammable materials.

⚠ CAUTION

Property damage due to gases that have an abrasive effect on surfaces when they come into contact with ambient humidity caused by weather conditions.

The device housing can be seriously damaged due to gases in combination with air humidity resulting from weather conditions (e.g. ammonia, sulphur).

1. If the device is exposed to gases, the installation must be carried out at observable locations.
2. Perform regular visual inspections.
3. Immediately remove any moisture from the housing.
4. Ensure adequate ventilation at the installation location.
5. Immediately remove dirt, especially on vents.
6. Failure to observe these warnings may lead to device damage which is not covered by the manufacturer warranty.

NOTE

Access by maintenance personnel for service

Any additional costs arising from unfavourable structural or mounting conditions shall be billed to the customer.

Installation space

- As dry as possible, climate-controlled, the waste heat must be dissipated away from the device.
- Unobstructed air circulation.
- Close to the ground, accessible from the front and sides without requiring additional resources.
- Protected on all sides against direct weather exposure and sunlight (thermal heating) in outdoor areas. Implementation where necessary via constructional measures, e.g. wind breaks.

Installation surface

- Must have adequate load-bearing capacity
- Must be accessible for installation and maintenance
- Must be made out of heat-resistant material (up to 90 °C)
- Must be flame resistant
- Minimum clearances to be observed during installation: [See figure 17: Wall mounting [▸ Page 21]

EN

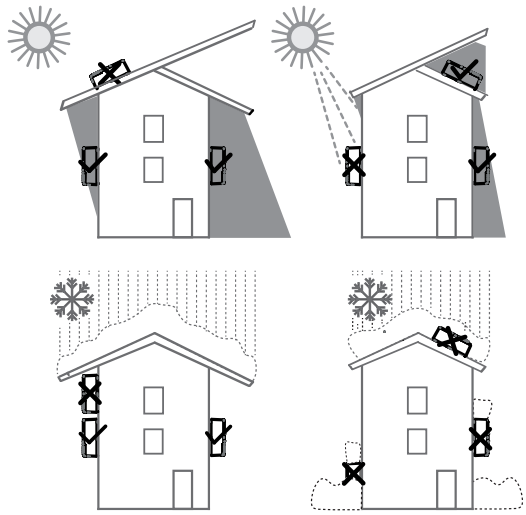

Fig. 10: Device for outdoor installation

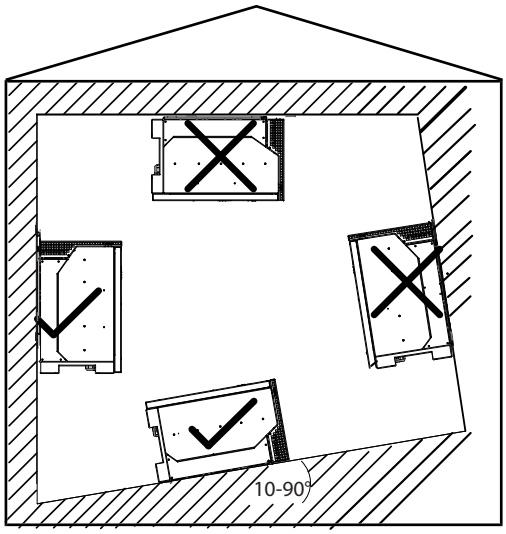

Fig. 11: Permissible installation location

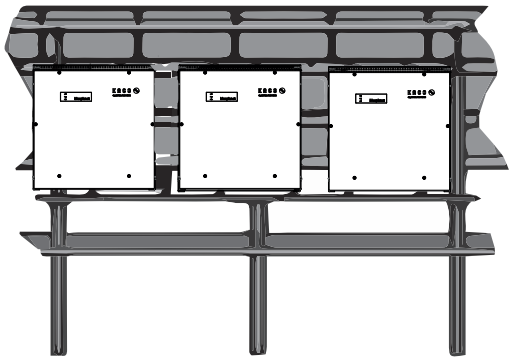

Fig. 12: Free-standing mounting under PV system

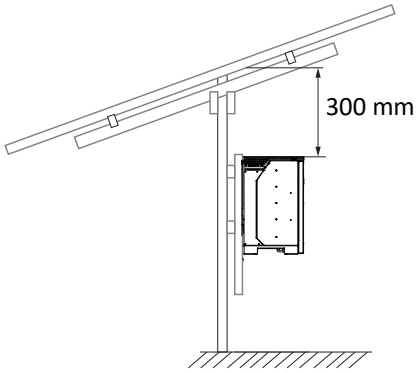

Fig. 13: Mounting instruction under PV system

6.2 Unpacking the device

⚠ CAUTION

Risk of injury caused by excessive physical strain.

Lifting the device, for transport, relocation and assembly, can result in injuries (e.g. back injuries).

1. Only lift the device using the openings provided.
2. The device must be transported and installed by at least 2 persons.

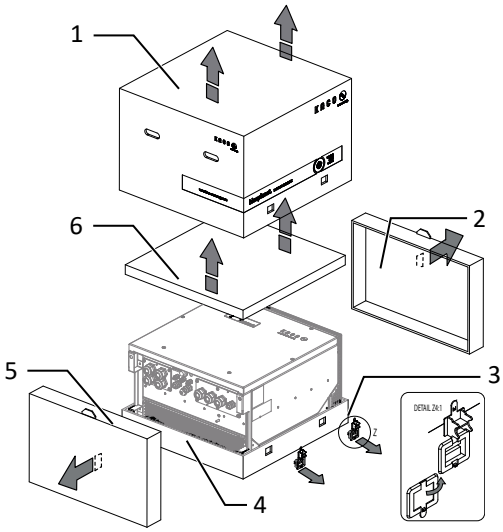

Fig. 14: Open the package

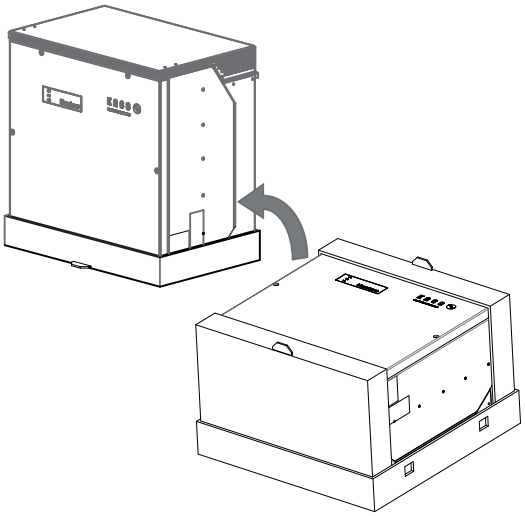

Fig. 15: Raise the device

EN

Key			
1	Cover	4	Base
2	Side section - upper	5	Side section - lower
3	Clamp (4x)	6	Cardboard packaging with mount and mounting kit

↻ The device is transported to the installation location.

1. Remove the plastic band from the pallet and packaging.
2. Pull the clamp off the packaging.
3. Pull the hood upwards to remove it and place the cardboard packaging to one side together with the mount and accessories.
4. Set the unit with base and side sections upright.
5. Remove the top side section and base from the device.

⇨ If the unit is in the correct installation position: Proceed with the installation of the mount.

6.3 Fastening the mount

⚠ CAUTION

Hazard when using unsuitable fixing materials!

If unsuitable fixing materials are used, the device could fall and persons in front of the device may be seriously injured.

1. Use only fixing materials that are suitable for the mounting base. The fastening materials supplied are only suitable for masonry and concrete.
2. Only install the device in an upright position.

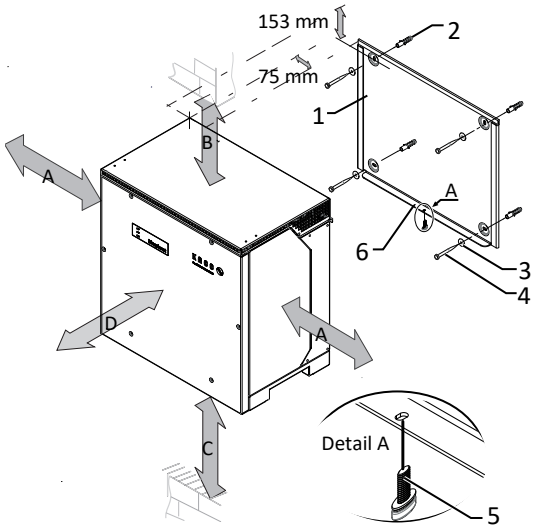

Fig. 16: Minimum clearances for wall mounting

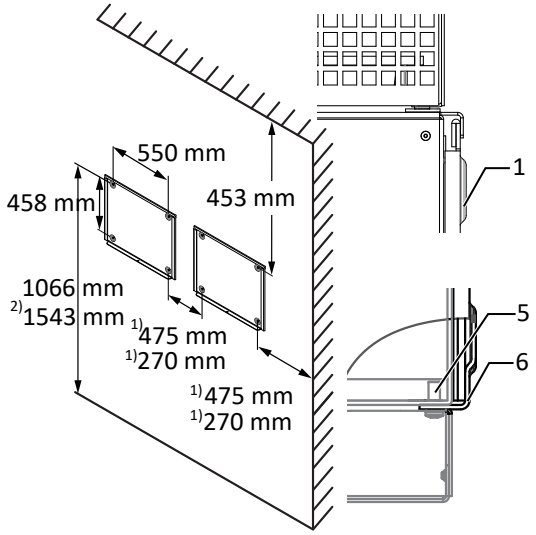

Fig. 17: Wall mounting

Key			
1	Mount	4	Screw for mounting (4x) [SW 13 / Fastening the mount [See section 6.3 Page 21]]
2	Fixings for mounting [S12 – Ø 12mm/ 90mm]*	5	Screw for securing purposes (1x)
3	Lock washer	6	Bracket to store the device
A	Minimum clearance: 120	1)	Minimum clearance excluding device:270
	Recommended clearance: 400	1)	Recommended clearance excluding device: 475
B	Minimum clearance: 300	-	-
C	Minimum clearance: 500	-	-
D	Recommended clearance: 1000	2)	Recommended clearance with DC breaker: 1543

EN

↻ Cardboard packaging with mount and mounting kit removed from the packaging and opened.

1. Mark the mounting position on the wall surface according to the position of the mount by drawing a line.
2. Mark the positions of the drill holes using the slot in the mount.

. **NOTE: The minimum clearances between two devices, or the device and the ceiling or floor have already been taken into account in the diagram.**

3. Fix the mount to the wall using suitable mounting fixtures from the mounting kit.

. **NOTE: Make sure that the mount is oriented correctly.**

⇨ Proceed with the installation of the device.

6.4 Installing and securing the device

⚠ CAUTION

Risk of injury from improper lifting and transport.

If the device is lifted improperly, it can tilt and result in a fall.

1. Always lift the device vertically using the openings provided.
2. Use a climbing aid for the chosen installation height.
3. Wear protective gloves and safety shoes when lifting and lowering the device.

NOTE

Power reduction due to heat accumulation!

If the recommended minimum clearances are not observed, the device may go into power regulation mode due to insufficient ventilation and the resulting heat build-up.

1. Observe minimum clearances and provide for sufficient heat dissipation.
2. All objects on the device housing must be removed during operation.
3. Ensure that no foreign bodies prevent heat dissipation following device installation.

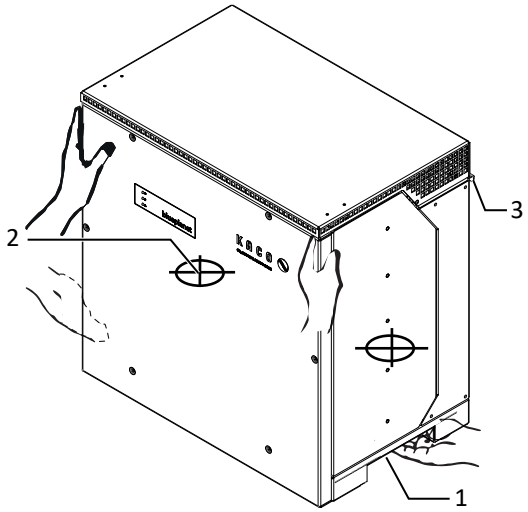

Fig. 18: Lift the device using the opening

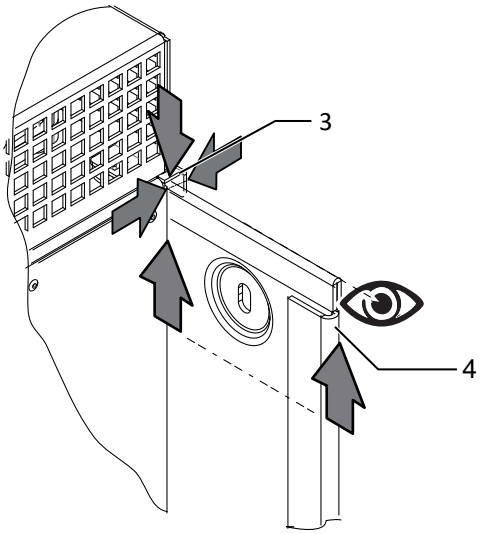

Fig. 19: Fitting the device onto the mount

Key			
1	Opening	3	Mounting bracket
2	Centre of gravity	4	Mount

Lifting and installing the device

↻ The mount has been installed.

EN

1. Lift the device using the side recesses. Observe the device's centre of gravity!

. **NOTE: Do not lift the device by the lid or cover!**

2. Fit the device onto the upper mount by means of the mounting bracket. Fit the device onto the lower mounting bracket in full so that the device sits flush with its rear side on the mount ([See figure 17: Wall mounting [▸ Page 21]).
3. Insert the screw provided into the lug of the mount and secure the device to prevent it from being lifted off [✕T30 / 2 Nm] [See figure 16: Minimum clearances for wall mounting [▸ Page 21].

. **NOTE: Alternatively: At this point, the screw described above can be replaced by a special screw as anti-theft protection.**

⇨ Device is installed. Proceed with the electrical installation.

⚠ CAUTION

Property damage as a result of condensation

During pre-assembly of the device, moisture can penetrate into the interior via the dust-protected threaded connections. The resulting condensate can cause damage to the device during installation and start-up.

✓ Keep the device closed during pre-assembly and do not open the connection area until you perform installation.

1. Seal off the screw connections using sealing covers.
2. Prior to installation, check the inner area for condensation and if necessary, allow it to dry sufficiently before installation.
3. Immediately remove any moisture from the housing.

EN

7 Installation

7.1 General information

⚠ DANGER

Lethal voltages are still present in the connections and cables of the device even after the device has been switched off and disconnected!

Severe injuries or death may occur if the cables and/or terminals/busbars in the device are touched.

1. The device must be mounted in a fixed position before being connected electrically.
2. Comply with all safety regulations and current technical connection specifications of the responsible power supply company.
3. The device is only permitted to be opened or serviced by a qualified electrician.
4. Switch off the grid voltage by turning off the external circuit breakers.
5. Check that all AC and DC cables are completely free of current using a clip-on ammeter.
6. Do not touch the cables and/or terminals/busbars when switching the device on and off.
7. Keep the device closed when in operation.

↻ **NOTE: S version: The device is shut down externally at the combiner box.**

1. Switch the DC isolator switch from 1 (ON) to 0 (OFF).
2. Press in the safety catch (1) from behind.
3. Attach the hanging lock (2) to the safety catch.

. **DANGER! A measurement in a live state may be required for tests. Only appropriately qualified electricians authorised by the mains supply network operator are permitted to open and maintain the device.**

. **DANGER! Observe all safety regulations against harmless contact with live materials.**

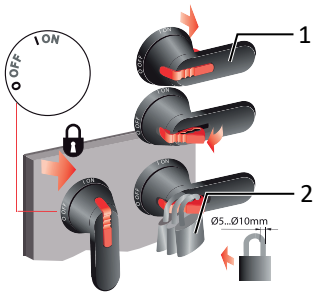

Fig. 20: Lock DC circuit breakers to prevent reconnection.

7.2 Opening the device

↻ The device has been installed on the mount.

↻ Wipe any moisture off the frame of the housing cover using a cloth.

1. Undo the 6 screws and carefully remove the housing cover [✂T_25]
2. Take care not to damage or soil the seals and fibre optics when setting down the housing cover.

⇨ Proceed with the installation of the device.

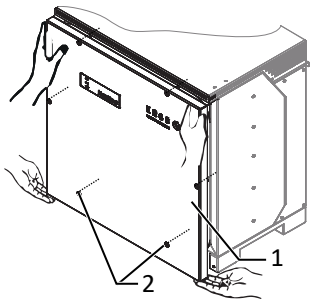

Fig. 21: Remove housing cover

EN

7.3 Surveying the connection area

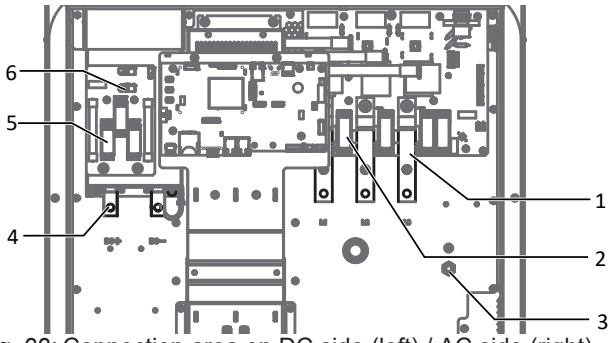

Fig. 22: Connection area on DC side (left) / AC side (right)

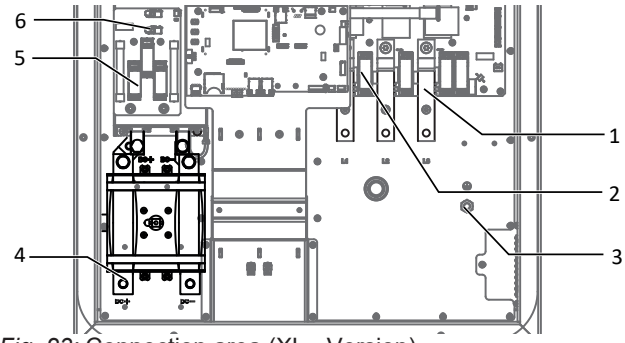

Fig. 23: Connection area (XL - Version)

Legend			
1	AC connection point	4	DC connection point
2	AC overvoltage protection base	5	DC overvoltage protection
3	AC earthing bolt	6	PID connection point

7.4 Making the electrical connection

NOTE

Select conductor cross-section, safety type and safety value in accordance with the following basic conditions:

Country-specific installation standards; power rating of the device; cable length; type of cable installation; local temperature

7.4.1 Requirement for supply lines and fuse

DC-side	
Max. conductor cross-section	240mm² (AL or CU)
Min. cable cross-section	in accordance with local installation standards
Cable diameter for cable fitting	16 - 28 mm
Cable lug dimension w width max	42 mm
Length of insulation to be stripped off	Depending on the ring cable lug
Recommended cable type	Solar cable
Cable lug Ø connection bolt	10mm
Tightening torque	30 Nm
Fitting for DC connection	M40
Torque for cable fitting	10 Nm

AC-side	
Max. conductor cross-section	240mm² (AL or CU)
Min. cable cross-section	in accordance with local installation standards
Cable diameter for cable fitting	16 - 28 mm
Length of insulation to be stripped off	Depending on the ring cable lug
Cable lug Ø connection bolt	Bore for M10 screw
Tightening torque	30 Nm
Connection type	Cable lug
Cable lug dimension w - maximum width	42 mm
Ground conductor connection	M10
Ground conductor connection tightening torque	10 Nm

EN

AC-side	
Fuse protection for installation provided by customer (max output overcurrent protection)	max. 250A
Fitting for AC connection	M40
Torque for cable fitting	10 Nm

Interfaces	
Cable diameter for cable fitting	(2x) 8 - 17 mm
Torque for cable fitting	4 (M25) 1.5 (M16) Nm
RS485 connection type	Spring-type terminal
RS485 terminal cable cross-section	0.25 - 1.5 mm²
Cable diameter for cable fitting	(3x) 5 - 10 mm
Torque for cable fitting	4 (M25) Nm
Ethernet connection type	RJ45

7.5 Connecting the device to the power grid

7.5.1 Prepare the grid connection

- ↻ A connection cable with 4 cores (4 individual cores or multi-core up to max. cable cross-section 16 - 28 mm) is available on the device.
- ↻ Nominal grid voltage matches the VAC nom name plate details.

1. For improved accessibility: Unfasten the AC input plate using the 6 screws [🔧T_30]
2. Unfasten the cable fitting for AC connection and PE earth (ground) [🔧W_46].
3. Remove sealing plug.
4. Guide the AC leads through the cable fittings.
5. Strip the insulation from the AC cables.
6. Strip the insulation from individual wires for L1 / L2 / L3 (ABC) and PE (ground) so that the strand and insulation can be pressed into the cable lug shaft.

. **CAUTION! Risk of fire due to chemical corrosion. Cable lugs must be suitable for the conductor material and copper busbars being used.** [4]

7. Press on cable lug.
8. Affix shrink tubing (not included as standard) over the shaft of the ring cable lug of the AC cable.
9. Fasten the input plate using the 6 screws [🔧T_30 / 📶 6 Nm]

⇨ Make the grid connection.

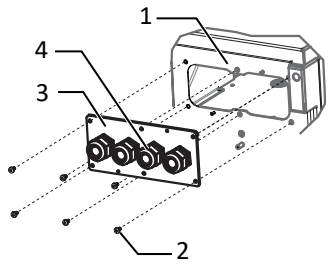

Fig. 24: Removing the AC input plate

1	Housing base – AC-side
2	Screws for mounting
3	Input plate
4	Cable fitting

[4] When using aluminium cable lugs we recommend using cable lugs with galvanic tin-plating or alternatively, AL/CU cable lugs as well as appropriate AL/CU washers.

Otherwise, the aluminium may be destroyed by the copper busbars in the presence of electrolytes (e.g. condensate).

EN

7.5.2 Make the grid connection

4-pole connection, TN, TT system

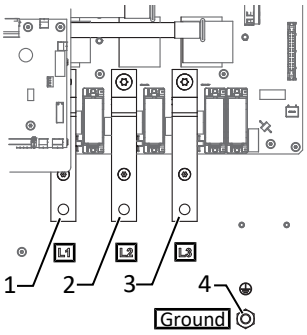

Fig. 25: 4-Pole AC grid connection

1	L1 busbar
2	L2 busbar
3	L3 busbar
4	Ground - earthing point

↻ Grid connection is prepared.

↻ AC cables equipped with an M10 ring cable lug [max. width b. 42 mm]

1. Loosen nut and lock washer at the marked grounding point.
2. Lay the grounding cable onto the grounding point. Secure it with the nut and lock washer provided [🔧W_17 / 📶 10 Nm]. [5]
3. Place the cable lug of cores L1 / L2 / L3 on the busbar in accordance with the labeling and secure it with a nut, screw and lock washer (fastening elements in scope of supply) [🔧W_17 / 📶 30 Nm].
4. Check secure fit of all connected cables.
5. Tighten AC cable fittings [🔧W_46 / 📶 10 Nm].

⇨ The device is connected to the power grid.

NOTE

If a residual current circuit breaker is necessary due to the installation specification, a type A residual current circuit breaker must be used.

If the type A is used, the insulation threshold must be set to greater than/equal to (≥) 200kOhm in the “DC parameters” menu Configuration via web user interface [See section 9.4.2 ▸ Page 52].

For questions regarding the appropriate type, please contact the installer or our KACO new energy customer service.

7.6 Connect PV generator to device

7.6.1 Checking the PV generator for a ground fault

⚠ DANGER

Risk of fatal injury due to electric shock!

Severe injury or death will result if the live connections are touched. When there is sunlight present on the PV generator, there is DC voltage on the open ends of the DC cables.

1. Activate the connection power at the switchbox or string combiner with the DC isolator switch.
2. The DC connection is intended exclusively for PV generators. Other sources fall within the scope of improper operation (e.g. batteries).
3. Only touch the PV generator cables on the insulation. Do not touch the exposed ends of the cables.
4. Avoid short circuits.
5. Do not connect any strings with a ground fault to the device.

Ensure that there is no ground fault

1. Measure the DC voltage between the protective earth (PE) and the positive cable of the PV generator.
2. Measure the DC voltage between the protective earth (PE) and the negative cable of the PV generator.
   ⇨ If stable voltages can be measured, there is a ground fault in the DC generator or its wiring. The ratio between the measured voltages gives an indication as to the location of this fault.
3. Rectify any faults before taking further measurements.

[5] When it is connection to a TN-C grid, the PEN grounding cable is connected to the ground earthing point.

EN

4. Measure the electrical resistance between the protective earth (PE) and the positive cable of the PV generator.
5. Measure the electrical resistance between the protective earth (PE) and the negative cable of the PV generator.
   ⇨ In addition, ensure that the PV generator has a total insulation resistance of more than 2.0 MOhm, since the device will not feed in if the insulation resistance is too low.
6. Rectify any faults before connecting the DC generator.

7.6.2 Designing the PV generator

⚠ CAUTION

Damage to components due to faulty configuration

In the expected temperature range of the PV generator, the values for the no-load-voltage and the short circuit current must never exceed the values for U_{dcmax} and I_{scmax} in accordance with the technical data.

1. Observe limit values in accordance with the technical data.

NOTE

Type and configuration of the PV modules.

Connected PV modules must be dimensioned for the DC system voltage in accordance with IEC 61730 Class A, but at least for the value of the AC grid voltage

NOTE

Sizing of the PV generator

The device is designed with a reserve of DC short-circuit current withstand capability. This allows oversizing of the connected PV generator. The absolute limit for the PV generator is the value of the maximum short circuit current (Isc max) and maximum open circuit voltage (Uoc max).

7.6.3 Connecting the PV generator

⚠ DANGER

Risk of fatal injury due to electric shock!

Severe injury or death will result if the live connections are touched. When there is sunlight present on the PV generator, there is DC voltage on the open ends of the DC cables.

1. Activate the connection power at the switchbox or string combiner with the DC isolator switch.
2. The DC connection is intended exclusively for PV generators. Other sources fall within the scope of improper operation (e.g. batteries).
3. Only touch the PV generator cables on the insulation. Do not touch the exposed ends of the cables.
4. Avoid short circuits.
5. Do not connect any strings with a ground fault to the device.

EN

Preparing the connection of the PV generator

↻ PV generator checked for a ground fault.

↻ Connection cables with 2 x 1 or 2 x 2 strands already on the device.

1. For improved accessibility: Unfasten the DC input plate using the 4 screws [✕T_30].
2. Unfasten the cable fitting for the DC connection [✕W_46]
3. Remove the sealing plug in the cable fitting used.
4. Remove the outer cladding of the DC cables.
5. Guide the DC leads through the cable fittings.
6. Strip the insulation from DC cables according to M10 ring cable lug so that the strand and insulation can be pressed into the cable lug shaft.

. **CAUTION! Risk of fire due to chemical corrosion. Cable lugs must be suitable for the conductor material and copper busbars being used** [6].

7. Press ring cable lug onto DC wires. When crimping, ensure that the ring cable lug is rotated in accordance with the final installation position.

. **NOTE: Danger to life due to a surge in voltage. If the clearance is insufficient, shrink tubing must be used.**

8. Guide the shrink tubing over the uninsulated crimping point and a maximum of 20 mm over the cable insulation and shrink-fit using manual shrink-fitting equipment. However, the shrink tubing must not protrude into the seal of the cable fitting.
9. Secure the input plate using the 4 screws [✕T_30 / 6 Nm]
10. Connect the PV generator.

.

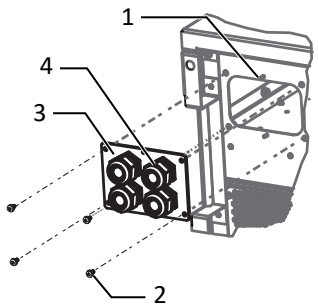

Fig. 26: Removing the DC input plate

1	Housing base – DC-side
2	Screws for mounting
3	Input plate
4	Cable fitting

Connecting the PV generator

↻ PV generator connection prepared.

↻ DC cables equipped with a ring cable lug [max width 42 mm].

1. Place the cable lug of cores DC- and DC+ on the busbar in accordance with the labeling and secure it with a nut, screw and lock washer (fastening elements in scope of supply) [✕W_17 / 30 Nm].
2. Check that the connected cables are fitted securely.
3. Tighten the cable fittings [✕W_46 / 10 Nm].

⇨ The device is connected to the PV generator.

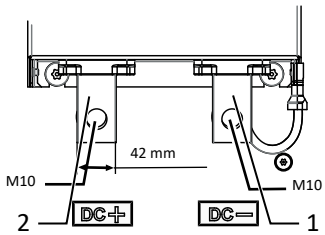

Fig. 27: DC connection

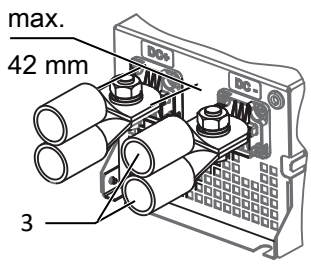

Fig. 28: DC connection with 2 DC+/- inputs

1	DC- busbar
2	DC+ busbar
3	Cable lug (optional with 2 DC +/- inputs)

[6] When using aluminium cable lugs we recommend using cable lugs with galvanic tin-plating or alternatively, AL/CU cable lugs as well as appropriate AL/CU washers.

Otherwise, the aluminium may be destroyed by the copper busbars in the presence of electrolytes (e.g. condensate).

EN

Connection PV generator with DC switch

↻ DC cables inserted through the input plate.

↻ **CAUTION! Risk of fire due to chemical corrosion. Cable lugs must be suitable for the conductor material and copper busbars being used** [7].

↻ **WARNING! Risk of short circuit due to incorrect size of the cable lug! Observe the dimensions for the selection.** [See figure 29: Configuring the DC cable [▸ Page 30]

1. Fit the DC cables with a ring cable lug. When crimping, ensure that the ring cable lug is rotated in accordance with the final installation position. [See figure 30: Fit DC cables to switch [▸ Page 30]

. **NOTE: Danger to life due to a surge in voltage. If the clearance is insufficient, shrink tubing must be used.**

2. Guide the shrink tubing over the uninsulated crimping point and a maximum of 20 mm over the cable insulation and shrink-fit using manual shrink-fitting equipment. However, the shrink tubing must not protrude into the seal of the cable fitting.
3. Draw in cables to the indicated fixing length and run with cable fitting.
   ⇨ DC cable configured. Continue with the connection to DC switch.

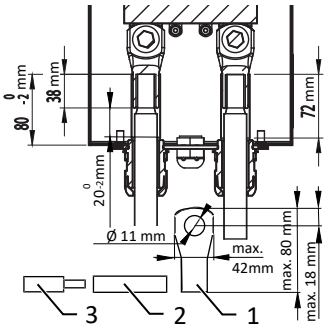

Fig. 29: Configuring the DC cable

1	Cable lug
2	Shrink tubing (not in scope of supply)
3	DC cable

↻ DC cable is configured.

↻ DC input plate pulled back from the connection side. [approx. 20 cm]

. **NOTE: For installation of the DC cables, use a torque wrench as well as the included open-ended wrench for counter-resistance.**

1. Pre-fit DC cable pair with the pre-installed screw and counternut onto the DC+ and DC busbar of the DC switch.
2. **Option for 2 cable pairs**: Insert spacer sleeve between 2 DC cables and pre-assemble in pairs with the provided screws and counternuts onto the DC+ and DC busbar of the DC switch.
3. Slide the DC input plate up onto the housing base and secure. [✕T_30 / ▟ 6 Nm]
4. Secure the screws and counternuts onto the DC+ and DC busbar of the DC switch. [✕W_16/17] / ▟ 30 Nm]
5. Tighten the cable screw fitting. [✕W_46 /▟ 10 Nm]

⇨ Component is electrically connected. Continue with the installation in the inverter.

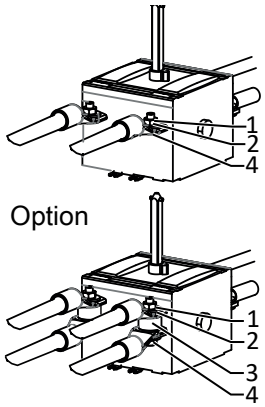

Fig. 30: Fit DC cables to switch

1	Nut
2	Lock washer
3	Spacer sleeve
4	Fixing screw

[7] When using aluminium cable lugs we recommend using cable lugs with galvanic tin-plating or alternatively, AL/CU cable lugs as well as appropriate AL/CU washers.

Otherwise, the aluminium may be destroyed by the copper busbars in the presence of electrolytes (e.g. condensate).

EN

7.7 Inserting the overvoltage protection

Installing the AC overvoltage protection

↻ Absence of AC/DC voltage ensured and device open [Opening the device [See section 7.2 Page 24]].

↻ On initial delivery, remove intermediate plug-in frame on the AC surge protection device.

☞ Position and secure intermediate plug-in frame onto AC surge protection socket.

NOTE: Different AC surge protection modules are used. The designation on the PCB must match the module code (GTD/MOV).

1. Insert AC surge protection modules individually into the AC surge protection socket.[See installation instructions in the Accessories [See section 4.4 Page 17] package]
2. Ensure that all protective elements are properly secured.
3. Remove SPD monitoring jumper for automatic monitoring.

⇨ Proceed with the installation of the device.

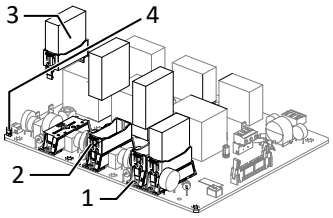

Fig. 31: Upgrading the AC surge protection

1	AC surge protection socket
2	AC intermediate plug-in frame
3	AC surge protection module (4 slots)
4	SPD monitoring jumper

Install RS485 surge protection

↻ It has been ensured that there is no AC/DC voltage present.

↻ Device open [Opening the device [See section 7.2 Page 24]].

. **NOTE: Clamp RS485 base element for surge protection at the intended position in accordance with the drawing onto the top hat rail from bottom to top.**

1. The following colour coding must be observed for the internal/external RS485 line:
   Data A => white (WH); Data B => blue (BU); GND => violet (VT)
2. The internal RS485 line is to be connected to the surge protection socket of the socket. [See installation instructions in the Accessories [See section 4.4 Page 17] package]

. **NOTE: For inlet/outlet on the RS485 externally, the surge protection socket outlet is to be assigned twice.**

3. Insert RS485 cable through the cable fitting interfaces into the connection area.
4. Remove insulation from RS485 line [approx. 20 mm] and strip individual wires [8 mm].
5. Fit wire end sleeves onto the wires and connect them to the RS485 base element in accordance with the wiring diagram [✕S_M3 / ▂0,5 Nm].
6. Connect output line with RS485 plug (included with the surge protection kit equipment) to the RS485 base element and insert the RS485 plug into the RS485 socket on the communication circuit board.
7. Fix output line to the cable guide.
8. Insert RS485 surge protection module into base.
9. Ensure that the protective elements are properly secured.

⇨ Proceed with the installation of the protective elements.

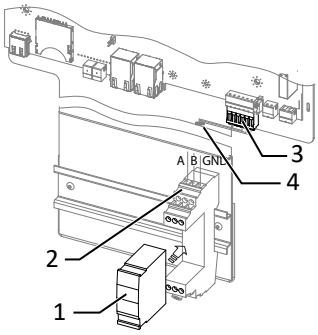

Fig. 32: Inserting the RS485 overvoltage protection

1	RS485 overvoltage protection module (optional)
2	RS485 overvoltage protection base assembly on top-hat rail
3	RS485 communication connector
4	Cable guide

EN

Installing the Ethernet surge protection

↻ It has been ensured that there is no AC/DC voltage present.

1. Clamp Ethernet surge protection module onto the top hat rail from top to bottom.
2. Connect the short Ethernet cable to an Ethernet port on the communication circuit board. [See installation instructions in the Accessories [See section 4.4 Page 17] package]
3. Lay the Ethernet cable through the corresponding cable fitting and plug into the surge protection module.

⇨ Proceed with the installation of the device.

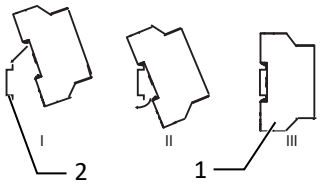

Fig. 33: Inserting the Ethernet overvoltage protection

1 Ethernet overvoltage protection module (optional)
2 Top-hat rail

7.8 Creating equipotential bonding

NOTE

Depending on the local installation specifications, it may be necessary to earth the device with a second ground connection. To this end, the threaded bolt on the underside of the device can be used.

↻ The device has been installed on the mount.

1. Strip the insulation from the equipotential bonding cable.
2. Furnish the stripped cable with an M8 ring cable lug.
3. Lay the cable for equipotential bonding onto the grounding point and attach with an additional M8 nut and lock washer [🔧W_17/ 10 Nm].
4. Check that the connected cable is fitted securely.

⇨ The housing is included in the equipotential bonding.

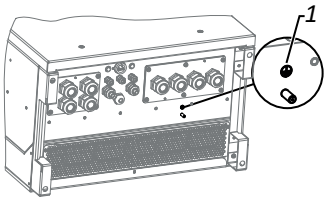

Fig. 34: Additional grounding point

1 Earthing bolt

7.9 Connecting the interfaces

7.9.1 Overview

⚠ DANGER

Risk of fatal injury due to electric shock!

Severe injury or death may result from improper use of the interface connections and failure to observe protection class III.

1. The SELV circuits (SELV: safety extra low voltage) can only be connected to other SELV circuits with protection class III.

⚠ CAUTION

Damage to the device from electrostatic discharge

Components inside the device can be damaged beyond repair by static discharge.

1. Note the ESD protective measures.
2. Earth yourself before touching a component by touching a grounded object.

All interfaces are located on the communication circuit board (HMI board) inside the housing.

EN

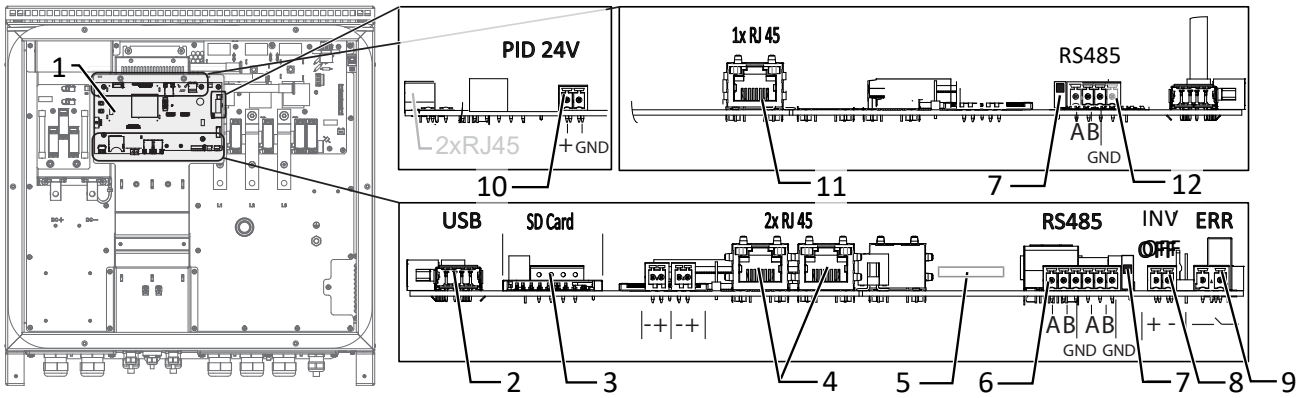

Fig. 35: Communication circuit board (HMI board)

1	Communication circuit board	7	DIP switch - Activate terminating resistor (2x)
2	USB socket	8	INV OFF - connection for remote controls - 24V(+/-20%) / 1A (at least 15mA)
3	SD slot	9	ERR connection for external grid protection component (fault signal relay)
4	Ethernet for network connection DHCP	10	PID supply 24V 0.5 A (option)
5	Digital input (optional)	11	Ethernet – only for starting up by means of static IP (Start-up via cable connection [See section 8.4.2 Page 43])
6	RS485 – standard	12	RS485 – Connection for string combiner

7.9.2 Insert and lay the cables

Insert the interface cables

1. Unfasten and remove the cover on the cable fitting [W_29/W_20].
2. Remove the sealing insert.
3. Pass the connection cable through the cover of the cable fitting and the sealing insert.
4. Insert the sealing insert into the cable fitting.
5. Feed the connection cables into the connection area.

⇨ Proceed with the connection.

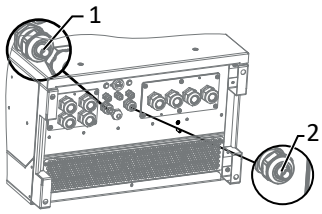

Fig. 36: Insert signal cables

1	Cable fitting for pass the Ethernet cable
2	Cable fitting for pass the signal cable

7.9.3 Ethernet connection

NOTE

The connection plug of an RJ45 cable is larger than the opening of an M25 cable fitting when it is installed. For this reason, remove the sealing insert before installation and thread the Ethernet cable outside of the cable fitting through the sealing insert.

NOTE

Use a suitable category 7 network cable. The maximum distance between two devices is 100 m (328 ft). The Ethernet switch allows for the repeater function and supports auto-sensing. Ensure that the cable is correctly assigned. You can use both crossed and 1:1 protectively-wired Ethernet connection cables.

Connecting the device to the network

↻ Connect the Ethernet cable to the device.

EN

1. Connect the Ethernet cable to the network or a computer.
2. Configure the Ethernet settings and the web server in the Settings menu.

Connecting the Ethernet cable

↻ Connecting cable inside the device.

1. Plug in an Ethernet cable at one of the two Ethernet ports on the communication circuit board.
2. Check that the connecting cable is fitted securely.

⇨ Connect additional signal cables.

7.9.4 Connecting the RS485 bus

NOTE

Ensure that the DATA+ and DATA- wires are properly connected. Communication is not possible if the wires are reversed! Different manufacturers do not always interpret the standard on which the RS485 protocol is based in the same way. Note that the wire designations (DATA- and DATA+) for wires A and B may vary from one manufacturer to another.

Properties of the RS485 data line	
Maximum length of the RS485 bus line	Max. 1200 m This length can be reached only under optimum conditions. Cable lengths exceeding 500m generally require a repeater or a hub.
Maximum number of connected bus devices	99 devices + 1 data monitoring unit
Data line	Twisted, shielded.
Recommendation	Li2YCYv (twisted pair) black for laying cable outside and in the ground, 2 x 2 x 0.5 mm²
	Li2YCY (twisted pair) grey for dry and damp indoor spaces, 2 x 2 x 0.5 mm²

↻ To prevent interference during data transmission:
- Observe the wire pairing when connecting DATA+ and DATA-.
Do not lay RS485 bus lines in the vicinity of live DC/AC cables.

1. Undo the cable fitting [✕W_20]
2. Thread the connection cables through the cable fitting.
3. Fit the ferrite clip on the door beam around the RS485 bus line using a cable tie.
4. Lay the connection cable correctly in the lower AC supply area and loosely fasten it using the cable ties provided.
5. Open and close the door completely to check that the connection cable is not subject to tensile or compressive forces.
6. To connect the shield, strip the RS485 data cable from the position of the shield terminal to the wire mesh (approx. 20 mm).
7. Clip the stripped RS485 data cable into the shield terminal.
8. Connect the connection cables to the corresponding connection terminals.
9. The following must be connected to all inverters and to the data monitor unit in the same way:
   - Wire A (-) to wire A (-) and wire B (+) to wire B (+)
   - GND to GND
10. Secure cable ties.
.
11. Tighten the cable fittings [✕W_20 / 1.5 Nm]
.

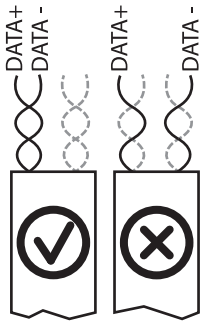

Fig. 37: Assignment of twisted-pair wires

EN

NOTE

When using the RS485 bus system, assign a unique address to every bus device (inverter, sensor) and terminate the terminal units (see the “Settings” menu) .

↻ Check whether one of the devices represents the terminal unit.

☞ Only activate the terminating resistor on the communication circuit board of the terminal unit using the DIP switch.

⇨ RS485 connection made. Lay signal cable correctly.

7.9.5 Connecting external grid protection components

The contact is designed as an N/O contact and is labelled "ERR" or "Relay" on the circuit board.

Maximum contact load	
DC	30 V / 1 A

↻ Connection area cover open.

1. Loosen the cable fitting to pass the signal cable through [✕W_20]
2. Thread the connection cables through the cable fitting.
3. Attach the connection cables to the terminals.Overview [See section 7.9.1 ▸ Page 32]
4. Tighten the cable fitting [✕W_20 / ▟ 1.5 Nm]

7.9.6 Inverter Off connection

Connect the Powador-protect (only in the case of 380/400V blueplanet 87.0TL3 / 92.0TL3)

↻ The cable to the external grid protection device is available on the device.

↻ Cover of the device has been opened.

1. Undo the cable fittings [✕W_20]
2. Pass the connection cable through the cable fittings.
3. Connect wire A (+) to the terminal marked "INV OFF+" on the first device via the "DO1" terminal of the protective device.
4. Connect wire B (-) to the terminal marked "INV OFF-" on the first device via the "GND" terminal of the protective device.
5. Connect the other devices to one another as follows:
   - wire A (+) to wire A (+) and wire B (-) to wire B (-).
6. Tighten the cable fitting [✕W_20 / ▟ 1.5 Nm]
7. After commissioning: Configure the `external` Overvoltage protection Powador-protect in the menu entry `Properties / Functions` Properties / functions.

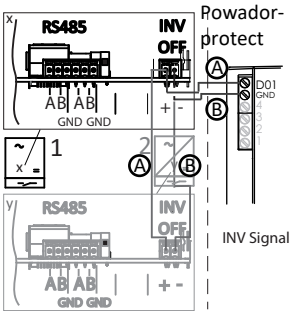

Fig. 38: Connecting the device to Powador-protect

EN

Connecting the 3rd party device

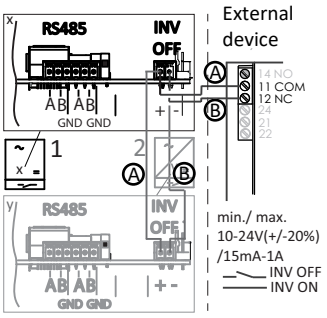

Fig. 39: Connecting the device to the external grid protection

- ↻ The cable to the external grid protection device is available on the device.
- ↻ Cover of the device has been opened.

1. Undo the cable fittings [🔧W_20]
2. Pass the connection cable through the cable fittings.
3. Connect wire A (+) to the terminal marked "INV OFF+" on the first device via the "COM"(11) terminal of the protective device.
4. Connect wire B (-) to the terminal marked "INV OFF-" on the first device via the "NC" terminal of the protective device.
5. Connect the other devices to one another as follows:
   - wire A (+) to wire A (+) and wire B (-) to wire B (-).
6. Tighten the cable fitting [🔧W_20 / 📶 1.5 Nm]
7. After commissioning: Configure the `external` 3rd party device Overvoltage protection in the menu entry Properties / functions.

7.10 Sealing the connection area

- ↻ The grid connection has been prepared.

1. Lift the housing cover onto the housing and loosely tighten the fastening screws.
2. Secure the housing cover by tightening all 6 screws in a diagonally opposite sequence [🔧T_25/📶 4.8 Nm].

- ⇨ The device has been mounted and installed.
- ⇨ Put the device into operation.

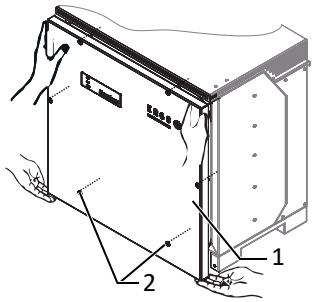

Fig. 40: Closing the housing cover

1	Housing cover
3	Screws

EN

8 Commissioning

8.1 Requirements

⚠ DANGER

Lethal voltages are still present in the connections and cables of the device even after the device has been switched off and disconnected!

Severe injuries or death may occur if the cables and/or terminals/busbars in the device are touched.

1. The device is only permitted to be commissioned by a qualified professional.
2. Unauthorised persons must be kept away from the device.

⚠ WARNING

Risk of burns from hot surface.

Heat sinks become very hot when in operation.

1. Never touch the heat sinks after commissioning the device.
2. Allow the heat sinks at least 10 minutes to cool down before cleaning.

↻ The device has been mounted and electrically installed.

↻ The PV generator supplies a voltage above the configured start voltage.

1. Connect the grid voltage using the external circuit breakers.
2. Connect the PV generator using the DC isolator switch (0 > 1)

⇨ The device begins operation.

⇨ During initial start-up: Follow the instructions of the New Connection Wizard.

NOTE

A mobile terminal device with WIFI interface is required in order to put the device into operation.

The following functions are only available via the WEB interface:

1. Initial start-up
2. Parameterization
3. Resetting the device to its factory defaults

NOTE

We recommend using an up-to-date Firefox or Chrome browser or the default browser that is available on the mobile terminal devices to configure the device via the web interface.

8.2 Preconditions relating to standards

Attachment of safety label in accordance with UTE C15-712-1

The code of practice UTE C15-712-1 requires that, upon connection to the French low-voltage distribution network, a safety sticker showing a warning to isolate both power sources when working on the device must be attached to each device.

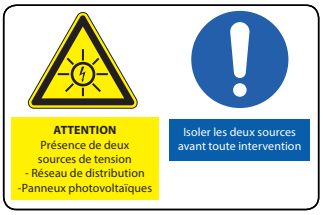

Fig. 41: Safety label UTE C15-712-1

☞ Attach the provided safety sticker to the outside of the device housing where it is clearly visible.

EN

Attach the DRM 0 safety label

According to AS/NZS 4777.2:2015, in Australia PV devices are marked that support the "Mode 0" remote control command.

1. Attach the supplied safety sticker next to the name plate on the device housing where it is clearly visible.
2. Please note the Powador-protect application note in the download area on our homepage. Here you will find the corresponding "Demand Response Modes" listed in the chapter "Reference for power control".

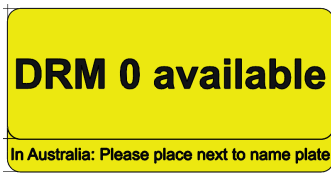

Fig. 42: Safety label DRM 0 for Australia

8.3 Network topologies

Segmentation of the system

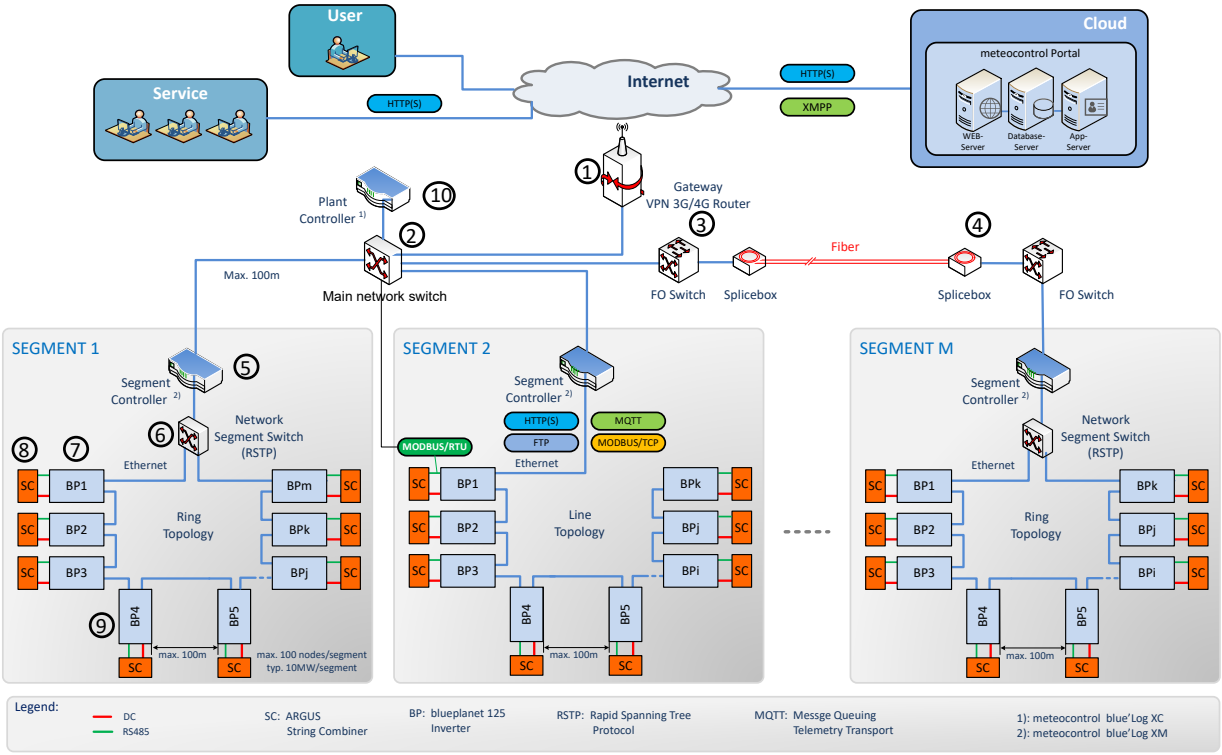

Fig. 43: Segmentation of a plant

1	Gateway VPN 3G/4G router	6	Network segment switch
2	Main network switch	7	Inverter device
3	FO - switch (fibre optic)	8	String combiner
4	Slicebox (for fibre optic data transfer)	9	Connection cable and protocol - DC / Modbus RTU / RS485
5	Segment Controller	10	Plant Controller

This illustration shows a possible variant for multiple segments. Depending on the local conditions, a different positioning of the components may also be preferable (e.g. position `Segment Controller` at a central location and connect in the segment switch via glass fibre cable).

Located directly after the Gateway VPN-Router, is the `main network switch` via which the `segment controller` is connected in. With the corresponding system size (distance from `main network switch` to the `segment controller` >100 m), it may also be necessary to connect in segments that are further away via a glass fibre connection.

Within a segment, the KACO devices can be coupled to one another via the integrated switch in an Ethernet daisy chain, whereby the segment controller is connected to the first element of the chain. This topology is displayed in segment 2, for example. A `Segment Controller` can manage up to 100 nodes. A node in this sense is any data source that is monitored by the `Segment Controller`. (Example: 45 pairs consisting of inverter and string combiner (90 nodes) + 10 reserve nodes for other substation/segment data sources)

EN

If additional failure safety is desirable, the KACO devices can also be arranged in a ring via a correspondingly configured `Network Segment Switch` (that supports the Rapid Spanning Tree Protocol "RSTP"). This switch is then also coupled to the `Segment Controller`. This configuration is shown as an example in segments 1 and M.

As can be seen in the figure, a `string combiner` is assigned to each KACO device. In terms of communication, these are coupled in directly to the device via an RS485 cable (green cable). MODBUS RTU is used as the communication protocol for this purpose. The monitoring of the `string combiner` is also carried out via the `Segment Controller`, whereby the KACO device undertakes the role of a MODBUS gateway. The `string combiner` must be coupled using a KACO blueplanet ARGUS.

The only 3rd party `string combiner` device currently available, which can also be addressed in this manner via the `Segment Controller`, comes from “Kernel Sistemi”.

Depending on the network load, the blueplanet 87.0-150TL3 can support up to 10 Modbus clients.

8.4 Start-up options

Option 1: Local, guided start-up by means of WIFI or LAN connection	– Installation technician connects to a KACO inverter via WIFI – Installation wizard carries out start-up steps interactively.
Option 2: Local start-up with pre-arranged configuration	– Installation technician uses a USB memory stick that contains a pre-prepared device configuration. – The device imports these settings and is then ready for operation.
Option 3: Start-up in a network without Segment Controller	– Start-up in an existing network – The installation technician can start up the device with the aid of the installation wizard as described at option 1. The device can be addressed using its host name.
Option 4: Centralised start-up via Segment Controller	– A device configuration that is available on the Segment Controller can be uploaded to several KACO inverters. – The devices are ready for operation once the configuration is activated.
Option 5: Centralised start-up via Plant Controller	– Available in future development levels. – A device configuration that is available on the Plant Controller can be uploaded to the relevant devices via the subordinate Segment Controllers.

Tab. 3: Start-up variants for individual devices/plant segments/overall plant

Following successful authorisation and selection of the main menu option - Configuration , the installation wizard is opened directly (if the device is still on the factory defaults and commissioning has not yet been carried out).

The installation wizard can still be relaunched at a later stage to make further changes to the original configuration.

The installation process currently consists of 9 steps that are outlined below.

Step 1: Language selection

↻ The installation wizard has been started or re-started.

1. Select `Menu language` via the dropdown menu.
2. Confirm the action field.

⇨ Pressing the `Next` button will take you to the next installation step.

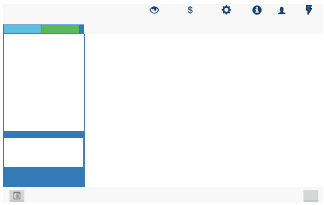

Fig. 44: Menu item: Configuration via web user interface [See section 9.4.2 Page 52]

EN

Step 2: Country configuration

↻ A language has been selected.

1. Select `Country` and `Grid type` from the dropdown menu.
2. Confirm the action field.

⇨ Pressing the `Next` button will take you to the next installation step.

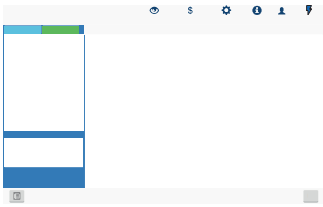

Fig. 45: Menu item:Configuration via web user interface [See section 9.4.2 Page 52]

Step 3: Network parameters

↻ The country and grid type have been selected.

. **NOTE: By default, IP addresses are assigned via the plant DHCP server.**

. **NOTE: If static IP addresses are required, you will have to assign these.**

. **CAUTION! In this case, it is no longer possible to distribute the configuration via the Segment Controller as this would then be part of the configuration and ultimately all inverters in the same segment would be assigned the same IP address.**

1. Activate `DHCP` or enter the `IP address` at the deactivated DHCP.
2. Confirm the action field.

⇨ The `Forward` button jumps to the next installation step.

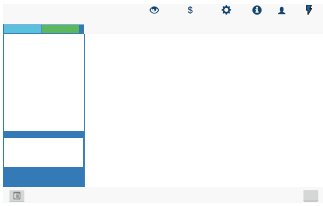

Fig. 46: Menu item: Configuration via web user interface [See section 9.4.2 Page 52]

Step 4: Localisation

↻ Network parameters have been set.

1. Set `Date`, `time and time zone` or initiate synchronisation with the client.
2. **NOTE: The synchronisation requires the activation of an NTP server** [8]
3. Select temperature unit via the dropdown menu.
4. Confirm the action field.

⇨ The `Forward` button jumps to the next installation step.

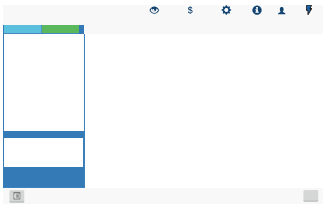

Fig. 47: Menu item: Configuration via web user interface [See section 9.4.2 Page 52]

Step 5: Cloud & portal configuration

↻ Localisation has been carried out.

1. If available, activate `Web portal` and select `Portal` from the dropdown menu.
2. Configure the portal.
3. Confirm the action field.

⇨ The `Forward` button jumps to the next installation step.

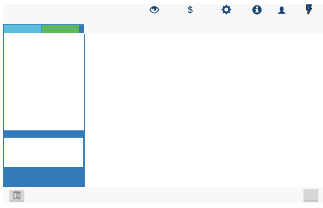

Fig. 48: Menu item: Configuration via web user interface [See section 9.4.2 Page 52]

[8] It is preferable to install this on a plant component. It is also possible to select an NTP server localized on the internet provided the device has direct access to the internet.

EN

Step 6: ModBus

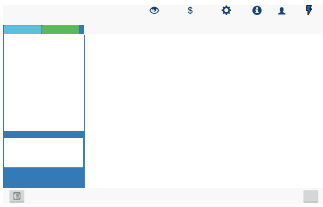

Fig. 49: Menu item: Configuration via web user interface [See section 9.4.2 Page 52]

↻ Portal configuration completed.

. **NOTE: The device supports MODBUS/TCP and conventional SUNSPEC models. If there are concerns over security, write access can be deactivated.**

1. Specify the `Modbus port` and determine `Read/write access`.
2. Confirm the action field.

⇨ Pressing the `Next` button will take you to the next installation step.

Step 7: String collector

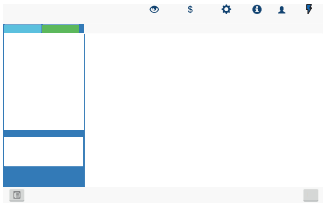

Fig. 50: Menu item: Configuration via web user interface [See section 9.4.2 Page 52]

↻ Modbus has been specified.

1. If available, activate `string collector monitoring`.

. **NOTE: The string combiner coupling is only applicable if this relates to a KACO blueplanet ARGUS device. The only 3rd party string combiner device currently available, which can also be addressed in this manner via the Segment Controller, comes from "Kernel Sistemi".**

2. Set other parameters.
3. Confirm the action field.

⇨ The `Forward` button jumps to the next installation step.

Step 8: Optional parameters

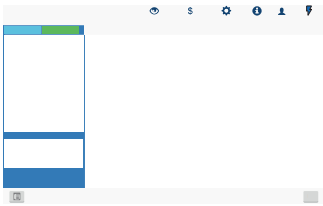

Fig. 51: Menu item: Only on the installation wizard!

↻ String collector monitoring has been set up.

. **NOTE: Using the plant ID, the device followed by its firmware version can be detected automatically in the Cloud/portal and assigned to the relevant plant.**

1. Enter the device name used to reach the device in the network.

. **NOTE: The coordinates identify the device installation location.**

2. Confirm the action field.

⇨ The `Forward` button jumps to the next installation step.

Step 9: Finalisation

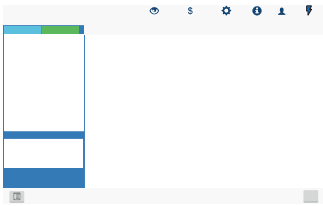

Fig. 52: Menu item: Only on the installation wizard!

↻ Optional parameters have been set.

1. Device configuration completed successfully. Please click "Finalise" to put the device into operation.
2. Specify a name for the device installation report.
3. Confirm the action field.

⇨ The `Forward` button jumps to the next installation step.

8.4.1 Start-up via WIFI

To start up the device directly, the first option is to carry out the installation interactively with a WIFI-compatible adapter. If such an adapter is not available, the other option is to perform an automatic configuration using a USB memory stick.

EN

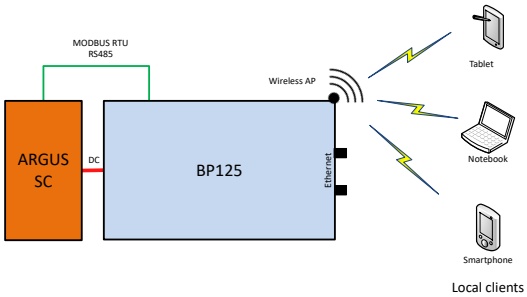

Fig. 53: Start-up via a direct WiFi connection

Application

The planned network infrastructure or AC-coupling is not yet in place or has not been completed.

A DC supply to the KACO inverter is sufficient for start-up.

Required components

- WiFi-compatible notebook, tablet or smartphone (Android or iOS devices can be used).
- USB WiFi stick (KACO accessory, type: WLAN adapter Digitus 150 N micro article no.: 3013222)

Establishing a connection to the KACO device via WiFi

1. Connect the USB WiFi stick to the device and connect to the access point generated by the device using a notebook or mobile device. Every device generates a unique AP-name based on its serial number so that it is possible to install several devices at the same time if multiple WiFi sticks happen to be available.
2. Name of access point: <Device designation serial number> (e.g. “bp87-0-<serial number>” or “bp150-<serial number>”)
3. Password: kacowifi
4. Launch the browser on the terminal device and enter server name a) or server address b):
5. http:// 192.168.1.1

⇨ The device configuration page is displayed.

1. At the Login/register icon, log in as:
2. User name: user
3. Pass word: kaco user

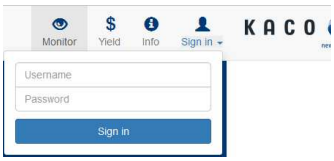

Fig. 54: Login screen

EN

8.4.2 Start-up via cable connection

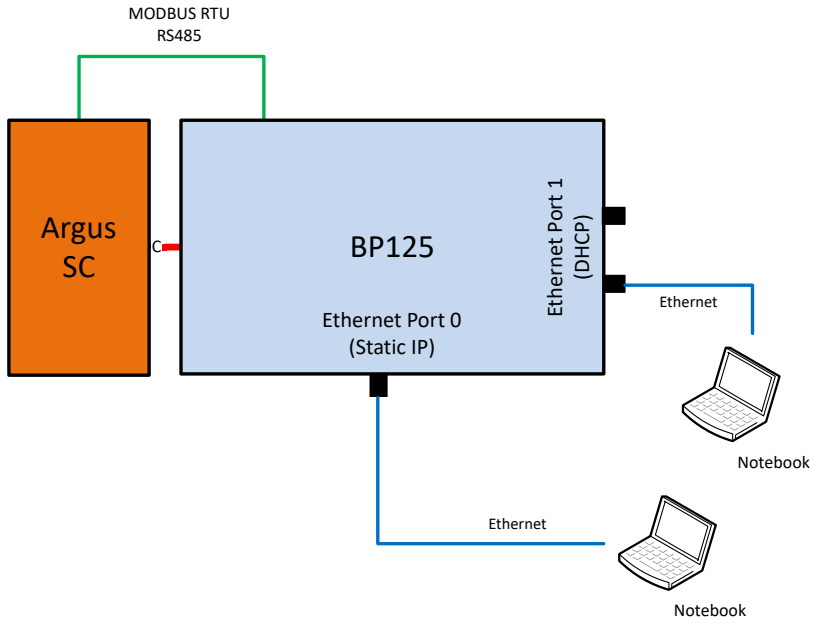

Fig. 55: Start-up via Ethernet

Application

The planned network infrastructure or AC-coupling is not yet in place or has not been completed.

A DC supply to the KACO device is sufficient for start-up.

Required components

- Notebook with Ethernet interface
- Ethernet cable (uncrossed patch cable)

Establishing a connection to the KACO device

1. The device must be opened in order to connect the Ethernet cable! For safety reasons, KACO therefore recommends establishing a connection via WiFi.
2. The device's communication circuit board has 3 Ethernet ports that can be used:

1. The 2 neighboring shielded Ethernet ports are marked LAN1 and LAN2. These ports have an internal switch and, in their factory default state, they expect to receive an IP address from a DHCP server. As such, these can only be used if the connected PC makes a DHCP service available.
2. The port marked CON700 that can be used to speak to the device using the static IP address 169.254.1.1. This option is preferable if you have decided to go with a wired solution.

☞ **NOTE: Please do not under any circumstances connect the Ethernet cable to the unshielded RJ45 slot marked J200 as this typically causes damage to the printed circuit board!**

1. Launch the browser on the terminal device and enter the IP address of the device:
   1. http://<IP address of device> (if ports LAN1 or LAN2 have been used)
   2. http://169.254.1.1 (if the port marked CON700 has been used)

   ⇨ The device configuration page is displayed.

8.4.3 Start-up via a USB memory stick

Application

The installation technician has saved a pre-prepared device configuration on a USB memory stick (e.g. a configuration that he has uploaded during the guided installation of a device or one that has been given to him by a third party).

Required components

- USB memory stick with pre-prepared start-up configuration file.

EN

Procedure

1. Connect the USB memory stick to the USB slot on the underside of the device.
   ⇨ The device checks the saved configuration and emits a flash code via the LEDs on the front of the device which allows conclusions to be drawn about the validity of the configuration ().
2. If the configuration is valid, the parameters should be adopted by pressing the right-hand multi-function button on the underside of the device.

⇨ Once the parameters have been adopted and the device has been restarted, the device is put into operation.

8.4.4 Starting up a network without Segment Controller

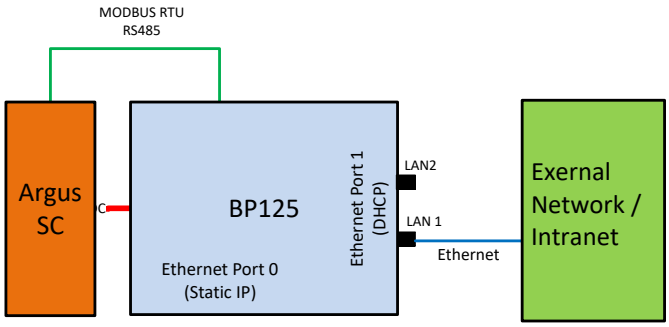

Fig. 56: Start-up via an external network

Application

The device can also be operated without an external Segment Controller or data logger. In this case however, the internal logging options are limited and log data are only available for a certain period of time.

If the device is to be integrated into an existing network, then the configuration shown in the following figure should be used. It is immaterial whether port LAN1 or LAN2 is used.

Required components

– A notebook that is logged into the external network.
– Ethernet cable (uncrossed patch cable)

Establishing a connection to the KACO device

☞ The device must be opened in order to connect the Ethernet cable! The device has 3 Ethernet ports that can be used. These are located on the printed-circuit board marked LP400. In this application only one of the 2 neighbouring shielded Ethernet ports (marked LAN1 and LAN2) should be used. These ports have an internal switch and, in their factory default state, they expect to receive an IP address from a DHCP server.

⇨ **NOTE: Please do not under any circumstances connect the Ethernet cable to the unshielded RJ45 slot marked J200 as this typically causes damage to the printed circuit board!**

1. Use a functioning Ethernet slot on the external network end.
2. It may be necessary to take additional IT configuration measures in the external network so that the device is assigned an IP address.
3. Next, launch the browser on the terminal device and enter the IP address of the device:
   ⇨ http://<IP address of the device>
   ⇨ The IP address can either be requested from the network administrator or determined using an IP scanner tool.
4. There is also the option of addressing the device using its host name. In its factory default state, the host name consists of a combination of the device derivative designation and the serial number, as shown below: <Device designation serial number>, so e.g. bp125-125TL01234567 or bp87-0-87-0TL01234567 [9]

[9] If the device serial number features a "." dot, then this "." dot is replaced with a "-" dash in the host name as, according to RFC229, host names must not contain any "." dots.

For local host names, only characters in the range [a-z], [A-Z] and the minus character are permitted.

EN

⇨ http://bp125-125TL01234567 or http://bp87-0-87-0TL01234567

5. If this is unsuccessful, please use the full domain name: http://bp125-125TL01234567<ExternalNetworkDomainName> or http://bp87-0-87-0TL01234567<ExternalNetworkDomainName>

8.4.5 Starting up a plant segment

The following figure provides an example of the structure of a plant segment consisting of a Segment Controller and a certain number of KACO devices with string combiner (SC) combinations.

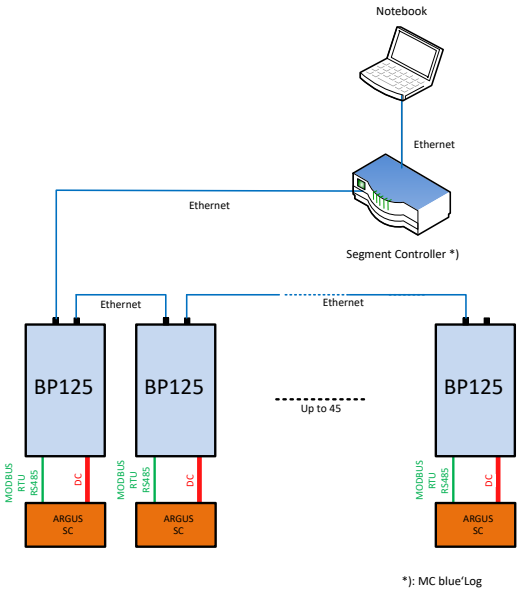

Fig. 57: Start-up via Segment Controller

Area of application

The network infrastructure already exists. All of the KACO devices in the segment can be reached via Ethernet using a Segment Controller.

NOTE: When multiple Segment Controllers are present, keep in mind that the Segment Controllers must not be connected to one another via the network during start-up. [10]

Once start-up is complete (assignment of devices to the individual Segment Controllers), these can be connected to the network by pressing a `Main network switch`.

Required components

– Notebook with Ethernet interface and pre-prepared start-up configuration file
– Segment Controller

Procedure

1. Connect the notebook to the Segment Controller via Ethernet (or to a switch that provides access to the Segment Controller).
2. Upload a pre-prepared device configuration (e.g. a device configuration that has been set up successfully on a single device).
3. Using the Segment Controller's WEB server, it is then possible to display and select all of the connected devices on the Segment Controller that should have this configuration.
4. Once the configuration has been uploaded to the respective devices, they will go into operation automatically following a restart.

8.4.6 Starting up an entire plant

NOTE: Configuration of the overall system via a central Plant Controller is not currently supported!

[10] Note: Otherwise all inverters would be visible for the respective Segment Controller.

EN

Area of application

The network infrastructure is available in full. All of the KACO devices in the segments can be reached via Ethernet using the Segment Controller assigned to them. All Segment Controllers are monitored by a central Plant Controller.

Required components

– Notebook with Ethernet interface or WiFi and pre-prepared start-up configuration file.
– Plant Controller.

Procedure

1. Connect the notebook to the Plant Controller via Ethernet or a WiFi-compatible Client.
2. Upload a pre-prepared device configuration (e.g. a device configuration that has been set up successfully on a single device).
3. All of the connected devices are displayed on the webserver of the Plant Controller and are selected from a list.
   ⇨ The device checks the saved configuration and emits a flash code via the LEDs on the front of the device which allows conclusions to be drawn about the validity of the configuration (control panel [See section 9.8.1 Page 72]).
4. If the configuration is valid, the parameters can be adopted by pressing the right-hand multi-function button on the underside of the device.

⇨ Once the parameters have been adopted and the device has been restarted, the device is put into operation.

EN

9 Configuration and operation

9.1 Initial start-up

NOTE

The DC power supply must be guaranteed during initial start-up.

The sequence of the settings required for initial start-up is preset in the configuration assistant.

9.2 Controls

The 3 LEDs on the device show the different operating states. The LEDs can display the following states:

LED illuminated | LED flashing | LED not illuminated

Operating status	LED Icon	Description
Start		The green "`Operating`" LED is illuminated when AC and DC voltage is present. If the LED is flashing, the internal communication between the components is established. After flashing, the device is ready for feed-in. If the LED continues to flash permanently, the internal communication is interrupted.
Feed-in start		The green "`Operating`" LED is lit. The green "`Feed-in`" LED is illuminated after the country-specific waiting period*. The device feeds into the grid. The interface switch engages audibly.
Feed-in operation with reduced power		The green “Operating” LED is lit. The green LED "Feed" is flashing because one of the modes: internal power reduction, external power reduction, idle power request or standalone mode is active. The device feeds into the grid. The interface switch engages audibly.
Non-grid feed mode		The green "`Operating`" LED is lit.
Error		No LED is lit. Error on the device or AC/DC source
Error		The red "`Fault`" LED is lit. Error on AC/DC source Conditional special cases: – There is no DC voltage present (e.g. DC isolator switch open)

EN

Operating status	LED Icon	Description
		– DC voltage too low (< starting voltage) – DC voltage is present (> starting voltage), but communications connection between the front end (operating unit) and back end (control unit) is faulty, or interrupted.

9.3 User interface

NOTE

Depending on the tolerances of the measuring elements, the measured and displayed values are not always the actual values. However, the measuring elements ensure maximum solar yield. Due to these tolerances, the daily yields shown on the display/Monitor may deviate from the values on the grid operator's feed-in meter by up to 15%.

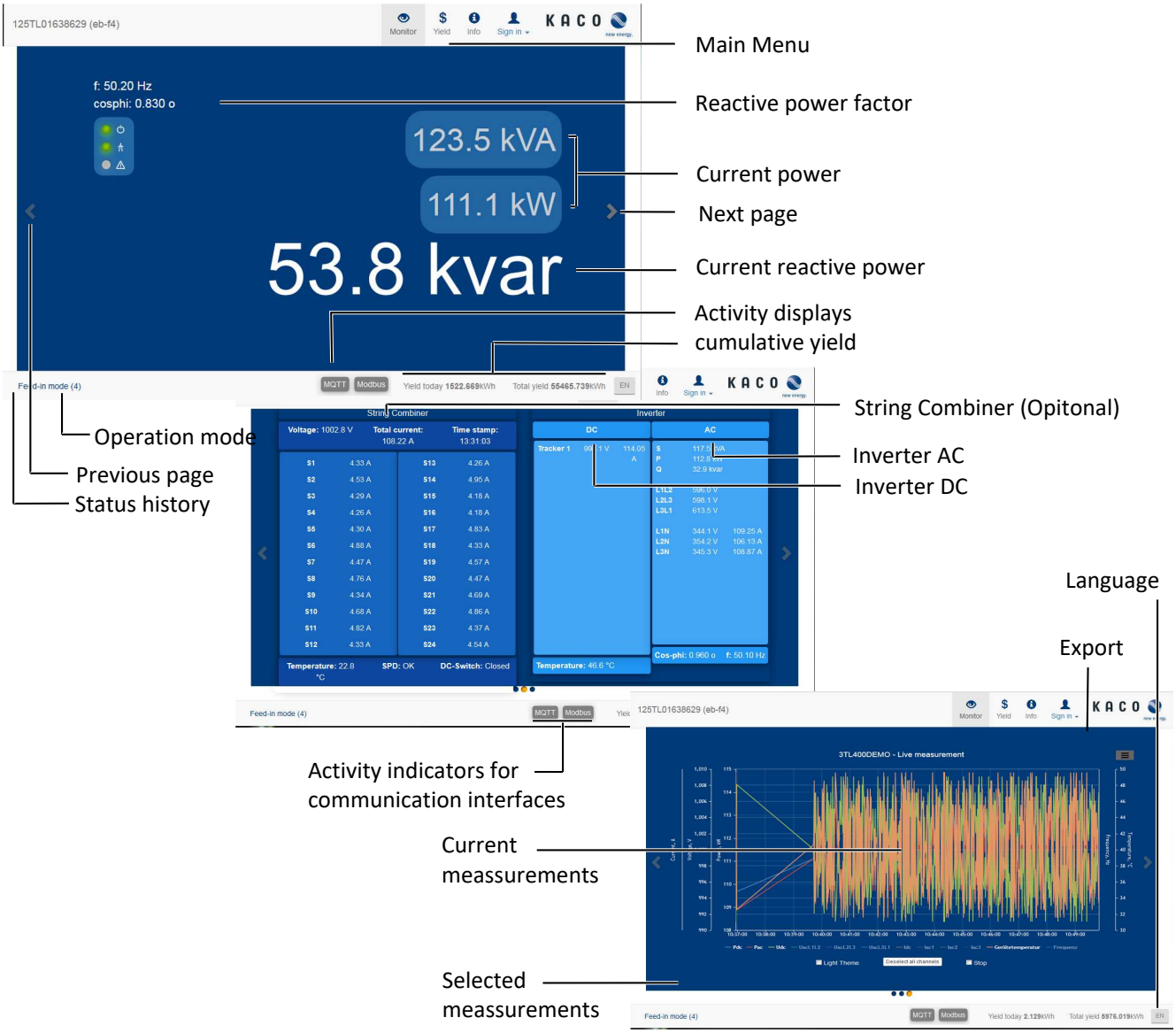

Fig. 58: Monitoring interface

Area	Description
Basic layout - 1st tab	Displays the current reactive power factor Displays the current output
Basic layout - 2nd tab	Displays AC and DC voltages

Area	Description
Basic layout - 3rd tab	Current measurement values with export function

Tab. 4: Description of the areas

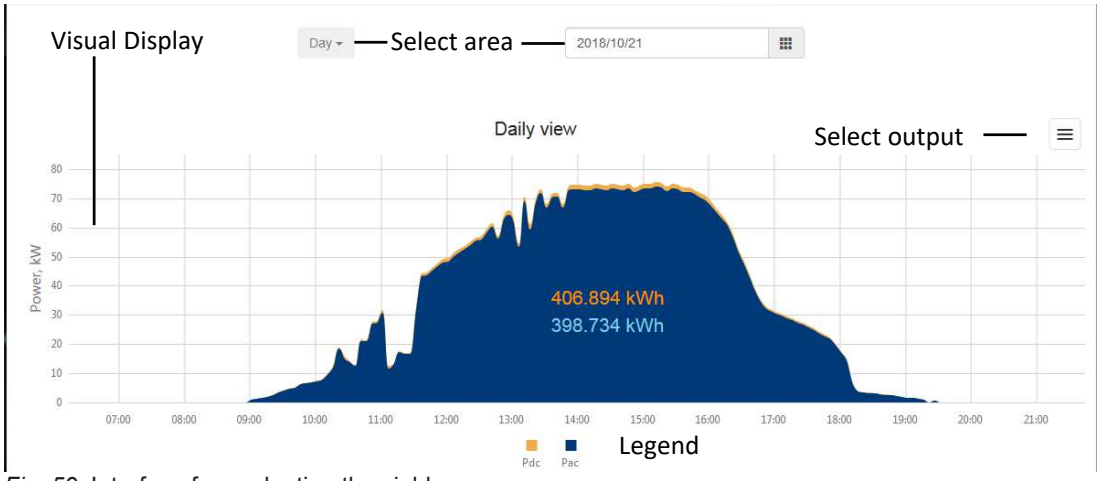

Fig. 59: Interface for evaluating the yields

Area	Description
Selection area	Filtering options for daily and annual values
Visual representation	Graphical bar chart
Legend	Meaning of color coding

Tab. 5: Description of the areas

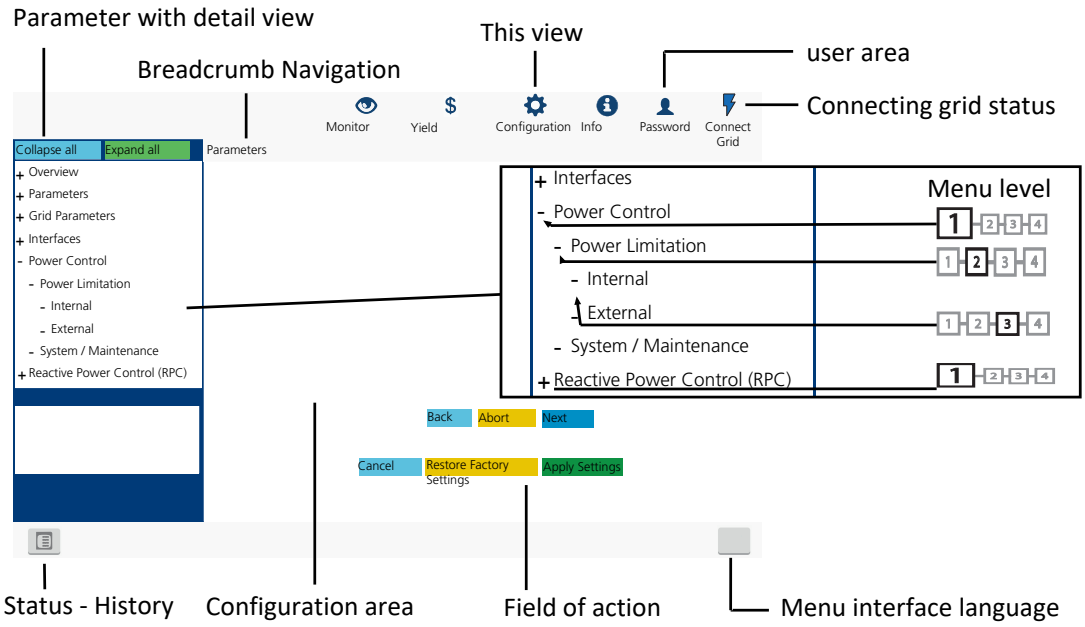

Fig. 60: Parameterization interface

Area	Description
Menu bar Tool bar	Menus and commands for operating the interface.
Scope of application	Displays parameter values, graphs or input options relative to the view, function and parameter selected.
Navigation area	Displays the user level and error messages. Enables selection of connected interfaces.

EN

Area	Description
	Enables selection of devices connected at the interface. Enables selection of functions in relation to the parameter selected.

Tab. 6: Description of the areas

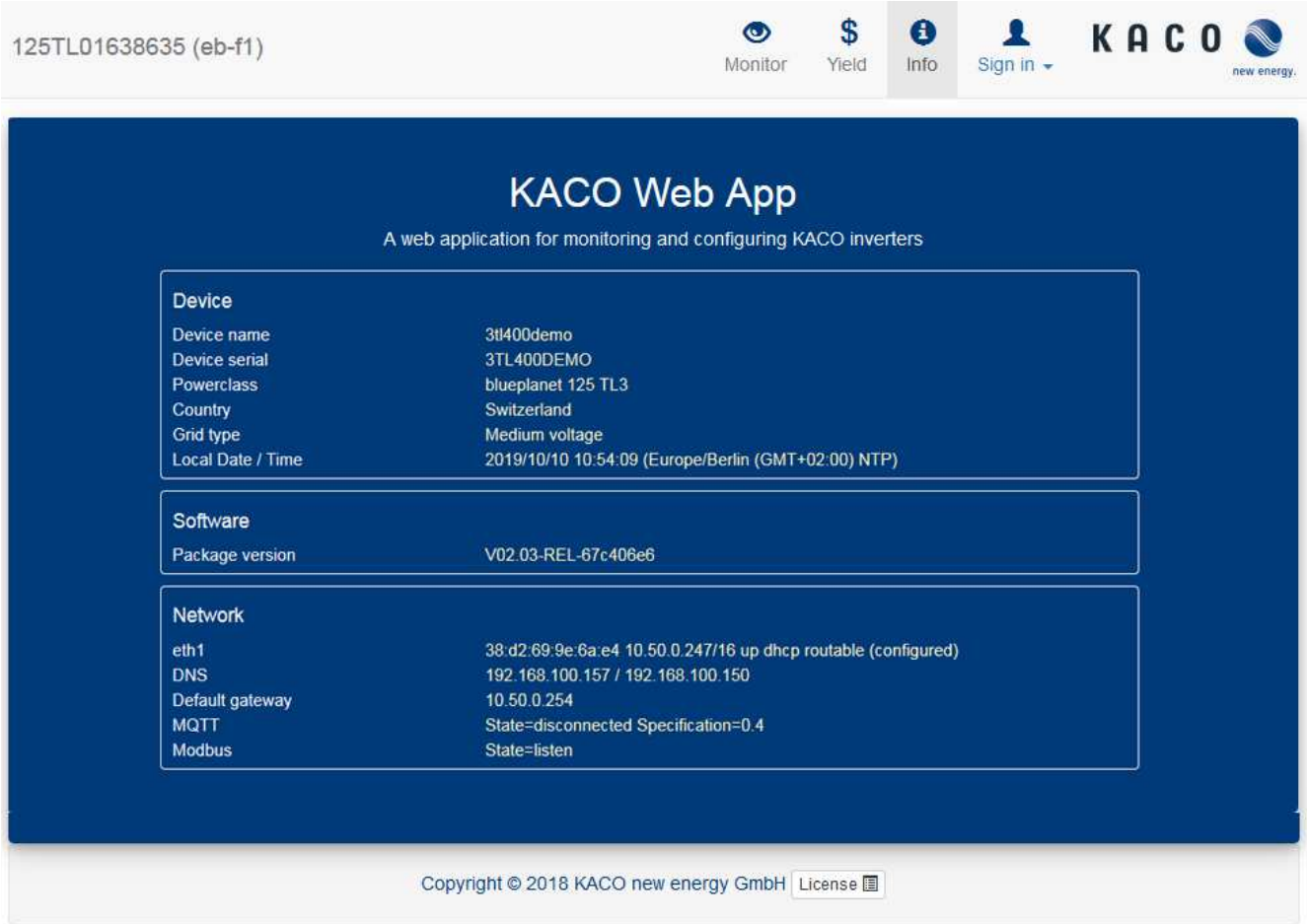

Fig. 61: Device and hardware information interface

Area	Description
Device	Displays the serial number, device name, grid type, local installation location and time
Software	Displays the firmware package installed
Network	Displays the current grid parameters

Tab. 7: Description of the areas

EN

9.4 Menu structure

NOTE

Protection of special grid parameters [x] **by means of a password** ([x] not network parameters!)

1. As soon as the password has been activated, this also applies to external change requests (e.g. via MODBUS or other external interfaces).
2. You will be asked to enter the password if you would like to change a protected grid parameter. Once you have entered the password, protection will be disabled for all protected grid parameters (including the password protection setting) for 15 minutes. Protection is reactivated automatically after this time has elapsed.
3. If you attempt to disable a protected parameter group, you will have to enter the password first unless it was entered earlier in the session.
4. As soon as a set of configuration parameters has been exported, the password is part of this configuration.
5. If the configuration has been imported into another device, then the other device will have the same protection status. If the other device already had protection and the password for the new configuration is different, then the new configuration will be rejected.

NOTE

We recommend using an up-to-date Firefox or Chrome browser or the default browser that is available on the mobile terminal devices to configure the device via the web interface.

Symbols used

1-2-3-4	Menu level (0,1,2,3)		Password-protected menu (password can be requested from KACO customer service)
	Display		Submenu
	Option menu		Option box Setting range

9.4.1 Yield via web user interface

Country-spec. Settings	Level	Display/ Setting	Action in this menu/meaning
	1-2-3-4	Daily view	**NOTE: Displays the recorded operating data graphically.** ☞ Select a day. ⇨ The web interface shows the selected data.
	1-2-3-4	Weekly view	**NOTE: Displays the recorded operating data graphically.** ☞ Select a week. ⇨ The web interface shows the selected data.
	1-2-3-4	Month display	Displays the recorded operating data graphically. ☞ Select a month. ⇨ The web interface shows the selected data.
	1-2-3-4	Yearly view	Displays the recorded operating data graphically. ☞ Select a year. ⇨ The web interface shows the selected data.

EN

Country-spec. Settings	Level	Display/ Setting	Action in this menu/meaning
	1	Total view	Displays the total yield up to now.
	1	Export / print Print PNG | PDF | JPEG | SVG | GIF	**NOTE: Opportunity to print out or save the chart.** 1. Select an output format. 2. Specify the storage location.

9.4.2 Configuration via web user interface

Country-spec. Settings	Level	Display/ Setting	Action in this menu/meaning
	1	Overview	Input screens for basic settings
	2	Language (14 languages)	1. Select the required language for the user interface. 2. Confirm the action field.
	2	Localisation Status	1. Select the current date and enter the time or press the button "Sync with client device now". 2. Select a time zone. 3. Activate the NTP server and assign a name. 4. Obtain NTP server settings from DHCP. 5. Specify the temperature unit. 6. Confirm the action field.
	2	Miscellaneous	1. Enter the device name. 2. Enter the degree of longitude and latitude of the installation location. 3. Enter the plant ID. 4. Confirm the action field.
	1	DC Parameter	Input screens for generator and string combiner.
	2	String Combiner	**NOTE: Option to configure a string combiner.**
		String combiner monitoring Status	☞ Select monitoring function with connected string combiner.
		Serial number of the assigned string combiner	☞ Enter serial number after installation of the device. **NOTE: The serial numbers of the string combiners that are not directly connected to the device are entered in the segment controller.**
		Baud rate & number of data acquisition units 9600 *8n1*	1. Specify transmission and detection intervals. 2. Enter the number of data acquisition units as necessary.
		unit address Unity channels	1. Specify IP address of the string combiner. 2. Specify the number of monitored strings. 3. Confirm the action field.

EN

Country-spec. Settings	Level	Display/ Setting	Action in this menu/meaning
	1 2 3 4	Constant voltage mode	**NOTE: Opportunity to deactivate the MPP seek mode in order to operate the device with a constant DC voltage.**
		Constant voltage 875 – 1300 [V]	☞ Set value for constant voltage control.
		Constant voltage mode Off | On	1. Activate or deactivate the constant voltage controller. 2. Confirm the action field.
	1 2 3 4	DC starting voltage 1000 – 1450 [V]	**NOTE: The device begins feed-in as soon as this DC voltage is present.** 1. Set the starting voltage. 2. Confirm the action field.
	1 2 3 4	Insulation resistance 100 – 2000 [kOhm]	1. Set threshold value (in 1kOhm increments) at which the insulation monitor reports a fault. 2. Confirm the action field.
	1 3 3 4	Grid Parameters	Input screens for network parameters
	1 2 3 4	Country & Grid type	**NOTE: This option influences the country-specific operating settings of the device. Please consult KACO Service for further information.** **NOTE: .** Configuration via web user interface [See section 9.4.2 Page 69] ☞ Select country and grid type.
		Nominal grid voltage & Nominal grid frequency Password protection Status	☞ Specify optional nominal grid voltage. **NOTE: The device switches off if the grid frequency deviates from the nominal grid voltage by more than 9.5Hz.** 1. Select optional nominal grid frequency. 2. Activate optional password protection. 3. Confirm the action field.
	1 2 3 4	3-phase monitoring On / Off	**NOTE: The device is equipped with redundant 3-phase monitoring. If the grid voltage exceeds or drops below the configured values, the device switches off. The minimum switch-off threshold can be set in 1 V increments.** ☞ Activate or disable monitoring.
	1 2 3 4	FRT (Fault Ride Through)	**NOTE: The device supports dynamic grid stabilization (Fault Ride-Through).**
	1 2 3 4	Operation mode – On | Off	☞ Select a control process. **On**: Activates dynamic grid support using dynamic reactive current. **Off**: Deactivates dynamic grid support using dynamic reactive current. Dynamic grid support remains active on account of immunity to interference.
		Setting | Manual |Predefined zero current	☞ Select a control process.
		Priority – Reactive current limitation | Active current priority	☞ Select a control process.

EN

Country-spec. Settings	Level	Display/ Setting	Action in this menu/meaning
	1 2 3 4	Constant k positive sequence dip & Constant k positive sequence swell k 0 – 10 2	☞ Set amplification factor k for the pos. sequence for drop and increase in the grid voltage.
	1 2 3 4	Constant K negative sequence dip Constant k negative sequence swell k 0 – 10 2	☞ Set amplification factor k for the neg. sequence for drop and increase in the grid voltage.
	1 2 3 4	Dead band 0 - 100 [% Uref] 10.0	☞ Set dead band in %.
	1 2 3 4	Dynamic reactive current only Off | On	**NOTE: With FRT mode activated, the pre-fault reactive current can be added.** ☞ If necessary, activate pre-fault reactive current.
	1 2 3 4	Dead band mode Mode 1 | Mode 2	☞ Select dead band mode for the active control process.
	1 2 3 4	Reference voltage 80 - 110 [% Unom] 100	☞ Set reference voltage for the active control process. Nominal value of phase neutral conductor voltage for grid. Reference voltage for formulae (1)and (3). Adjustable in the range from level 1 undervoltage protection to level 1 overvoltage protection.**NOTE:** Dynamic grid support using a fast feeding of residual current [See section 10.3.2 Page 88]
	1 2 3 4	Minimum operating voltage 45 – 125.0 [% Unom] & Maximum operating voltage 45 – xxx [% Unom] Password protection Status	☞ Set voltage range for the active control process.
	1 2 3 4	Zero current threshold undervoltage 0 – 80 [%Unom] Zero current threshold overvoltage 108 – xxx [% Unom]	☞ Set voltage threshold for zero current mode. If one or more phase/phase or phase/neutral conductor voltages move below or above the configured threshold, the inverter changes to zero current mode. The total current is regulated to virtually zero.
	1 2 3 4	Reactive current limitation 0 – 100 % [% Imax]	☞ Set the reactive power limitation.
	1 2 3 4	Minimum support time 1000 – 15000 ms	☞ Set the minimum support time.

EN

Country-spec. Settings	Level	Display/ Setting		Action in this menu/meaning
	1	Monitoring time PV voltage		☞ Set time for voltage monitoring.
		Monitoring time grid voltage		☞ Set time for voltage monitoring.
		Enhanced Island Detection		**NOTE: Grid operators require shutdown of the device with standalone grid detection** Advanced islanding detection [See section 10.5 Page 93]
		ROCOF operation mode passive Off | On		☞ Activate passive grid influence by application of a frequency.
		ROCOF operation mode active Off | On		☞ Activate active grid influence by application of a frequency.
		Frequency shift Off | On		☞ Activate frequency shift.
		Pulse period repetition time 40 – 6000 [ms]		☞ Define period for detection.
		ROCOF threshold stage 1 value 0.1 – 6.0 [Hz / s] ROCOF threshold stage 2 value 0.1 – 6.0 [Hz / s]		☞ Define threshold for ROCOF
		ROCOF threshold stage 1 time 0.10 – 5.00 [s] ROCOF threshold stage 2 time 0.10 – 5.00 [s]		☞ Define time value for ROCOF.
		ROCOF proportionality factor -5000 – 5000 [‰ / Hz] Status		1. Define the proportionality factor. 2. Confirm the action field.
		Ramp Rate Limitation		**NOTE: Opportunity to limit power in the case of an increasing and decreasing grid frequency.**
		Operating mode Status		☞ Select operating mode.
		Increasing gradient 1 – 65534 [%/min]		☞ Set the gradient.
		Decreasing gradient 1 – 65534 [%/min]		☞ Set the gradient. This percentage relates to the nominal frequency.
		Password protection Status		1. Activate optional password protection. 2. Confirm the action field

EN

Country-spec. Settings	Level	Display/ Setting	Action in this menu/meaning
	1 2 3 4	Connection Conditions	**NOTE: Precise switch-on conditions should be specified relative to the grid conditions.**
		Min. conn. voltage after grid mon. ⚙ 10 – 110 [% Unom] / & Max. conn. voltage after grid mon. ⚙ 90 – 126.6 [% Unom]	☞ Specify switch-on voltage range after grid error.
		Min. conn. frequency after grid mon. ⚙ 45 – 65 [Hz] / & Max. conn. frequency after grid mon. ⚙ 45 – 65 [Hz]	☞ Specify switch-on frequency range after grid error.
		Min. conn. voltage after grid failure ⚙ 10 – 110 [% Unom] / & Max conn. voltage after grid failure ⚙ 90 – 126.6 [% Unom]	☞ Specify switch-on voltage range after grid error
		Min. conn. frequency after grid failure ⚙ 45 – 65 [Hz] / & Max. conn. frequency after grid failure ⚙ 45 – 65 [Hz]	☞ Specify switch-on frequency range after grid error.
	1 2 3 4	Trip Settings	**NOTE: Activate shutdown according to generic parameters, frequency or voltage.**
	1 2 3 4	Generic parameters	**NOTE: Opportunity to activate standard protective shutdown**
		Trip with intentional delay Status	1. If necessary, activate delayed trip-off. 2. Activate optional password protection. 3. Confirm the action field.

EN

Country-spec. Settings	Level	Display/ Setting	Action in this menu/meaning
	1 2 3 4	Frequency	**NOTE: Opportunity to monitor frequency trip-off**
		Trip underfrequency monitoring Status	☞ Activate, if necessary.
		Number of underfrequency trip-off levels 1- 5	☞ Specify the number of support levels.
		Underfrequency trip-off 42.5 – 65 [Hz] / & underfrequency trip-off time for levels 1 to 5 0 – 120000 [ms]	**NOTE: If the grid frequency is within the deactivation range for the duration of the deactivation time, then the function is deactivated.** ☞ Specify the range and trip-off time.
		Trip overfrequency monitoring Status	☞ Activate, if necessary.
		Number of overfrequency trip-off levels 1- 5	☞ Specify the number of support levels.
		Overfrequency trip-off 45.0 – 67.5 [Hz] / & overfrequency trip-off time for levels 1 to 5 0 – 120000 [ms] Password protection Status	**NOTE: If the grid frequency is within the deactivation range for the duration of the deactivation time, then the function is deactivated.** 1. Specify the range and trip-off time. 2. Activate optional password protection. 3. Confirm the action field.

EN

Country-spec. Settings	Level	Display/ Setting	Action in this menu/meaning
		Voltage	**NOTE: Option to monitor the voltage shutdown**
		Trip undervoltage monitoring Status	☞ Activate if necessary.
		Number of undervoltage trip-off levels 1 - 5	☞ Specify the number of support levels.
		Undervoltage trip-off 10 – 100 [% Unom] & Undervoltage trip-off time for levels 1 to 5 0– 120000 [ms]	☞ Define range and trip-off time.
		Trip overvoltage monitoring Status	☞ Activate if necessary.
		Number of overvoltage trip-off levels 1 - 5	☞ Specify the number of support levels.
		Overvoltage shutdown 100 – 125 - 150 [% Unom] / & Overvoltage trip-off time for levels 1 to 5 0– 120000 [ms]	1. Define range and trip-off time. 2.
		Password protection Status	1. Activate optional password protection. 2. Confirm the action field.
		Overvoltage protection Transient overvoltage protection 114.8 - 148.0 [% Unom] Password protection Status	☞ Set transient overvoltage protection. **NOTE: Shutdown occurs within a mains cycle.** 1. Activate optional password protection. 2. Confirm the action field.
		Interfaces	Input screens for configuring the interfaces.
		Network	Opportunity to configure the installed network.
		IP Settings	**NOTE: Parameterization of network access.**
		DHCP Status	☞ Activate or deactivate the DHCP. **On**: Once the DHCP server becomes available, the IP address, subnet mask, gateway and DNS server are automatically applied and the aforementioned menu items are filled in. **Off**: Apply settings manually.
		IP Address	☞ Allocate a unique IPv4 address in the network.

EN

Country-spec. Settings	Level	Display/ Setting	Action in this menu/meaning
	1 3 3 4	Subnet Mask	☞ Assign a subnet mask.
	1 3 3 4	Default gateway	☞ Enter IPv4 address of the gateway.
	1 3 3 4	DNS server settings via DHCP Status	☞ Activate or deactivate the DNS server from the DHCP. **On**: Once the DHCP server becomes available, the IP address is automatically applied and the aforementioned menu items are filled in. **Off**: Apply settings manually.
	1 3 3 4	Primary DNS & Secondary DNS (optional)	1. Enter IPv4 address of DNS server. 2. Confirm the action field.
	1 3 3 4	Web Settings HTTP Port HTTPS Port	**NOTE: Opportunity to set up the http ports.** ☞ Set up the port at which the webserver can be reached. 1. Set up the safe port at which the webserver can be reached. 2. Confirm the action field.
	1 3 3 4	Modbus	**NOTE: Option to set the Modbus port.**
	1 3 3 4	Port	☞ Set up network port.
	1 3 3 4	Activation Status	☞ Allow Modbus TCP read access.
	1 3 3 4	Write access Status	☞ Allow Modbus TCP write access. Enabling the write access allows system critical settings to be changed over Modbus TCP. Really enable write access? ☞ Confirm the action field.
	1 3 3 4	MQTT Broker IP Broker port	**NOTE: The MQTT protocol is used to implement the advanced functions between the Segment Controller and the inverter (in particular, firmware updates, distribution of device configurations etc.).** 1. Displays the IP address transmitted by the Segment Controller. . **NOTE: The standard settings allow for successful communication with the Segment Controller.** 2. Confirm the action field.
	1 3 3 4	RS485 RS485 address	**NOTE: Option to parameterise the RS485 interface. The parameters of the RS485 (CON901) are (as with all KACO inverters): 9600 Baud, 8n1 and cannot currently be re-configured via the web interface** **NOTE: The address must not be the same as that of any other device or data logger.** ☞ Assign a unique RS485 bus address to the device. Bus termination is carried out on the HMI board by means of a dip-switch ☞ Confirm the action field.
	1 2 3 4	Power Control	Input screens for power regulation

EN

Country-spec. Settings	Level	Display/ Setting	Action in this menu/meaning
		Power Limitation	**NOTE: The output power of the device can be set permanently to a lower value than the maximum output power by the internal power limitation. This may be necessary in order to limit the maximum power rating of the system at the grid connection point, upon the grid operator's request.**
		Internal Power Limitation Status	**NOTE: Opportunity to limit the power internally** ☞ Specify the activation status.
		Maximum apparent power Slim 1000 – S_{max} [VA]	**NOTE: The max. apparent power limits the internal power of the device.** More detailed information at: Other grid-supporting functions that are effective in the case of active power [See section 10.4 Page 91] ☞ Enter the value or set the value using the slider. The apparent power is limited globally to the configured value in VA. All active and reactive power control values use S_{lim} instead of S_{max} as 100 %, if S_{lim} is configured.
		Maximum active power Plim 1.0 - 100.0 [% Slim] Password protection Status	More detailed information at: Other grid-supporting functions that are effective in the case of active power [See section 10.4 Page 91] ☞ Enter the value or set the value using the slider. Active power is limited globally to the configured value in % S_{lim} or S_{max}. 1. Optional: Activate password protection. 2. Confirm the action field.
		External	**NOTE: The output power of the device can be set permanently to a lower value than the maximum output power by the external power limitation.**
		Power Limitation Status	☞ Specify the activation status.
		AC fallback active power 0 – 100 [%Plim]	☞ Set the fallback power. Specifies the default power in case of loss of communication. If no active power command is received for the configured timeout, the inverter adapts the power to the configured fallback power.
		Fallback time 60 – 43200 [s]	☞ Set the fallback time. Specifies the timeout period until the inverter reverts to fall back power in case of loss of communication.
		Output gradient limitation increase & Output gradient limitation decrease 1 - 65534 [% / min]	☞ Specify the increasing and decreasing output gradient.
		Settling time 200 – 30000 [ms] Password protection Status	1. Specify the settling time. 2. Activate optional password protection. 3. Confirm the action field.

EN

Country-spec. Settings	Level	Display/ Setting	Action in this menu/meaning
		Power rampup active	**NOTE: Power ramp-up is used to ramp up the power gradually**
		Power rampup gradient 1 – 600 [% / min]	☞ Set increase.
		Rampup on every connect Status Rampup on first connect Status Rampup after grid failure Status Password Protection Status	1. Activate option. 2. Activate optional password protection. 3. Confirm action field
		Reactive Power Control (RPC)	**NOTE: Activate the reactive power process in the mode menu.**
		Mode Cos-phi const. | Q const. | Cos-phi(P/Pn) | Q(U) Password protection Status	Reactive power control [See section 10.1 Page 74] 1. Select a control process. 2. Activate optional password protection. 3. Confirm the action field.
		Cos-phi constant	Define cos ϕ constant.
		cos-phi const. 0.3 - 1	☞ Determine the specified displacement factor. .
		Output gradient limitation increase & Output gradient limitation decrease 1 - 65534 [% / min]	**NOTE: In addition to configuring the transient behavior using the settling time corresponding to a first-order filter, the reactive power setting can be determined by a maximum gradient - maximum change in the reactive power per time period.** 1. Maximum change in the reactive power %Smax/min in the event of a change to over-excited mode. 2. Maximum change in the reactive power %Smax/min in the event of a change to under-excited mode.
		Settling time 200 - 60000 [ms] 1000 Password protection Status	1. Set the settling time in the event of an abrupt change in the reactive power target value (e.g. caused by a voltage jump). The transient behaviour corresponds to a first-order filter (PT-1) with transient time = 5Tau. 2. Activate optional password protection. 3. Confirm the action field.
		Q constant	**NOTE: Define Q specification.**
		Q constant 0 – 100%	☞ Set the idle power Q (in %) to a fixed value.
		Under-excited | over-excited	☞ Select the type of phase shift. **NOTE: Under-excited relates to inductive load, over-excited relates to capacitive load.**

EN

Country-spec. Settings	Level	Display/ Setting	Action in this menu/meaning
	1 2 3 4	Output gradient limitation increase & Output gradient limitation decrease 1 - 65534 [% / min]	**NOTE: In addition to configuring the transient behavior using the settling time corresponding to a first-order filter, the reactive power setting can be determined by a maximum gradient - maximum change in the reactive power per time period.** 1. Maximum change in the reactive power %Smax/min in the event of a change to over-excited mode. 2. Maximum change in the reactive power %Smax/min in the event of a change to under-excited mode.
	1 2 3 4	Settling time 200 - 60000 [ms] 1000 Password protection Status	1. Set the settling time in the event of an abrupt change in the reactive power target value (e.g. caused by a voltage jump). The transient behaviour corresponds to a first-order filter (PT-1) with transient time = 5Tau. 2. Activate optional password protection. 3. Confirm the action field.
	1 2 3 4	Cos-phi	**NOTE: More detailed information can be found in** Reactive power functions [See section 10.1.3 Page 77] ☞ Define the standard characteristic curve with 3 nodes.
	1 2 3 4	Lock-In voltage 10 – 124.8 [% Unom]	☞ Set the voltage above which control is activated.
	1 2 3 4	Lock-Out voltage 10 – 124.8 [% Unom]	☞ Set the voltage below which control is deactivated.
	1 2 3 4	Settling time 0.2s – 30s	☞ Set the settling time in the event of an abrupt change in the reactive power target value. **NOTE: In the target value changes as a result of activating or deactivating the function by way of lock-in and lock-out voltage or changing the active power, then the new target value is set within 10s with the transient response of a first-order filter (PT-1) with a time constant of Tau=2s.**
	1 2 3 4	Output gradient limitation increase & Output gradient limitation decrease 1 - 65534 [% / min]	**NOTE: In addition to configuring the transient behavior using the settling time corresponding to a first-order filter, the reactive power setting can be determined by a maximum gradient - maximum change in the reactive power per time period.** 1. Maximum change in the reactive power %Smax/min in the event of a change to over-excited mode. 2. Maximum change in the reactive power %Smax/min in the event of a change to under-excited mode.
	1 2 3 4	Number of nodes 2 - 10	**NOTE: The maximum number of configurable nodes depends on the selected grid type.** ☞ Specify the number of nodes.

EN

Country-spec. Settings	Level	Display/ Setting	Action in this menu/meaning
	1 3 3 4	1st node … 10th node Power | Reactive power | Excitation 0-100%	☞ Specify the power factor for the 1st , 10th … node as a percentage of the maximum power. **NOTE: For the 1st node, the power must be 0%; for the last node, the power must be 100%. The power values of the nodes must increase continuously.**
		0.3 - 1	☞ Specify the cos φ of the node.
		Over-excited | under-excited Password protection Status	☞ If a reactive power not equal to 1 is selected: Select the type of phase shift. **NOTE: Over-excited relates to a capacitive load, under-excited relates to an inductive load.** 1. Activate optional password protection. 2. Confirm the action field.
	1 3 3 4	Q(U)	**NOTE: Define Q(U).**
	1 3 3 4	Lock-In power 0 – 100 [%] S_{max}	☞ Set the active power as % of rated power above which control is activated.
	1 3 3 4	Lock-Out power 0-20 [%] S_{max}	☞ Set the active power as % of rated power below which control is deactivated.
	1 3 3 4	Lock-In time 0 – 60 [s] Lock-Out time 0 – 60 [s]	☞ Set the length of time that the active power must remain above the lock-in / lock-out power level before control is activated.
	1 3 3 4	Dead time 0 -10 [ms]	☞ Set the intentional delay for the start of the Q(U) function. **NOTE: If the voltage switches from a characteristic curve section with Q=0 to a characteristic curve section with Q≠0 under active control, then the reactive power setting process is delayed by the set dead time. Once the dead time has expired, the control circuit is no longer subject to a delay and the set settling time determines the transient behavior.**
	1 3 3 4	Output gradient limitation increase & Output gradient limitation decrease 1 - 65534 [% / min]	**NOTE: In addition to configuring the transient behavior using the settling time corresponding to a first-order filter, the reactive power setting can be determined by a maximum gradient - maximum change in the reactive power per time period.** 1. Maximum change in the reactive power %Smax/min in the event of a change to over-excited mode. 2. Maximum change in the reactive power %Smax/min in the event of a change to under-excited mode.
	1 3 3 4	Settling time 1 – 120 [s]	☞ Set the response speed of the Q(U) control.
	1 3 3 4	Minimum cos-phi Q1 Minimum cos-phi Q4 0 – 1	**NOTE: In the event of a significant voltage deviation, the maximum reactive power adjustment range can be limited by a minimum cos-ϕ NOTE: in order to prevent an excessive reactive power supply and, as a result, a significant reduction in the maximum active power that can be fed in.** ☞ Enter the minimum cos-ϕ factor for quadrants 1 and 4.

EN

Country-spec. Settings	Level	Display/ Setting	Action in this menu/meaning
	1 2 3 4	Q(U) active curve 1 - 4	☞ Select the active curve. **NOTE: Up to 4 characteristic curves can be configured independently and one of them can be activated for regulation each time.**
	1 2 3 4	Priority mode Q-Priority | P-Priority	☞ Set priority for reactive power – Q or active power – P. **NOTE: When it comes to P priority, the reactive power adjustment range is limited subject to the active power that is currently available and fed in.**
	1 2 3 4	Number of nodes 2 - 10	**NOTE: The maximum number of configurable nodes depends on the selected grid type.** ☞ Specify the number of nodes.
	1 2 3 4	Node 1- Node 10 Power / Excitation / Voltage 0 – 100 [%]	☞ Set the reactive power of the node as a percentage of the maximum power.
		Over-excited | under-excited	☞ Select the type of phase shift. **NOTE: Over-excited relates to a capacitive load, under-excited relates to an inductive load.**
		0 – 100 [% Unom]	☞ Enter the voltage of the node in volts. **NOTE: The voltage values of the nodes must increase continuously. At voltages below the 1st node and voltages above the last node, the reactive power value of the 1st or last node is used each time.**
	1 2 3 4	Frequency dependent power reduction	**NOTE: Activate frequency-dependent power reduction in the P(f) menu.**
Not for IL, IT	1 2 3 4	P(f) operation mode Off | Mode 1 | Mode 2	☞ Specify the operation mode.
	1 2 3 4	P(f) gradient 0 – 200 [%/ Hz]	☞ Set gradient of power limit function with increasing frequency in % / Hz. This percentage relates to the nominal frequency of 50 Hz. Specifies the active power reduction as function of the frequency. Active power is reduced by a gradient in %-P_{ref} . One Hz of frequency deviation results in the configured reduction of output power. The percent value is relative to P_{ref}, the actual power at the instant the frequency exceeds the configured activation threshold (PM). **NOTE: A droop in the range of 2 % to 12 % equals a gradient in the range of 100 %/Hz to 16 %/Hz.**
	1 2 3 4	P(f) gradient in the case of a decreasing frequency 0 – 200 [%/ Hz]	☞ Specify gradient in the case of a decreasing frequency as a ‰(per thousand) / minute (if mode "1" or mode "2" is active).

EN

Country-spec. Settings	Level	Display/ Setting	Action in this menu/meaning
	1 2 3 4	P(f) activation threshold 45 Hz – 70 Hz	☞ Specify activation threshold (if mode 1 or mode 2 is active, this menu item is displayed permanently for IT and IL!) **NOTE: The function is activated if the activation threshold is exceeded. In mode 2 this value also serves as a deactivation threshold.**
	1 2 3 4	P(f) intentional delay 0 – 5000 [ms]	☞ Set the power limitation delay in seconds.
Not for IL, IT	1 2 3 4	P(f) deactivation time 0 – 3600 [s]	☞ Specify time for power reduction (if mode 1 is active).
	1 2 3 4	P(f) deactivation gradient 0 – 60000 [% / min]	☞ Determine the deactivation gradient.
	1 2 3 4	Dynamic gradient mode On | Off	☞ Activate dynamic gradient.
	1 2 3 4	P(f) minimum deactivation frequency 45 – 61.5 [Hz] / & P(f) maximum deactivation frequency 45 – 70 [Hz]	☞ Specify the minimum deactivation frequency in Hz. **NOTE: Only evaluated in Mode 1.** The function is deactivated if the frequency re-enters the range between minimum and maximum deactivation threshold and remains there for the duration of the deactivation time.
	1 2 3 4	P(f) settling time 200 – 2000 [ms] Password protection Status	1. Set the P(f) settling time mode. 2. Activate optional password protection. 3. Confirm the action field.
	1 2 3 4	Output gradient limitation increase & Output gradient limitation decrease 1 - 65534 [% / min]	☞ Specify the increasing and decreasing output gradient.
	1 2 3 4	Voltage-dependent	**NOTE: Activate voltage-dependent power reduction in the P(U) menu.**
	1 2 3 4	P(U) operation mode Off | On	☞ Activate the control process. **Off**: Deactivates dynamic grid support using dynamic reactive current. Dynamic grid support remains active on account of immunity to interference.
	1 2 3 4	Reference power Actual power | Nominal power	☞ Select the power-dependent control method.
	1 2 3 4	Evaluated voltage Maximum phase voltage | Positive phase sequence voltage	☞ Select the voltage to be rated. Specifies which voltage is evaluated in a three-phase system.

EN

Country-spec. Settings	Level	Display/ Setting	Action in this menu/meaning
	1 2 3 4	Hysteresis mode Off | On	**NOTE: Hysteresis mode affects the shutdown response of P(U).** ☞ Activate the mode.
	1 2 3 4	Deactivation gradient 0 – 65534 [% / min]	☞ Set the gradients for the power limitation.
	1 2 3 4	Deactivation time 0 – 60000000 [ms]	☞ Specify the time for voltage reduction.
	1 2 3 4	Output gradient limitation increase & Output gradient limitation decrease 1 - 65534 [% / min]	☞ Specify the increasing and decreasing output gradient.
	1 2 3 4	Settling time 200 – 120000 [ms]	☞ Specify the settling time.
	1 2 3 4	Active curve 1 - 5	☞ Select active curve. **NOTE: Up to 5 characteristic curves can be configured independently and one of them can be activated for regulation each time.**
	1 2 3 4	Number of nodes 2 - 5	☞ Specify the number of nodes.
		Power 0.0 – 100.0 [%]	☞ Specify power for 1st, 5th ... node as a percentage of the maximum power.
		Voltage 0.0 – 126.0 [%] Password protection Status	1. Specify voltage for 1st, 5th ... node as a percentage of the maximum voltage. 2. Activate optional password protection. 3. Confirm the action field.
	1 2 3 4	Properties / functions	**NOTE: Input screens for advanced device functions**
	1 2 3 4	External grid protection disconnection	**NOTE: Option to detect the external grid protection devices**
		External grid protection Status	☞ Select device.
	1 2 3 4	Powador-protect	**NOTE: Configures the grid shutdown via a Powador-protect connected to the digital input of the device.**
		Powador-protect operation mode Auto | On | Off	↻ Auto/On: A Powador-protect is operating in the photovoltaic plant and is connected to the device at the digital input/output. ☞ Set the operating mode for Powador-protect. **Auto**: The device automatically detects a Powador-protect integrated into the photovoltaic plant. **On**: The digital signal of the Powador-protect must be present at the digital input of the device for the device to start with feed-in. **Off**: The device does not check whether a Powador-protect is integrated into the PV plant.

EN

Country-spec. Settings	Level	Display/ Setting	Action in this menu/meaning
	1	3rd party device	**NOTE: Configures the grid shutdown via a 3rd party device connected to the digital input of the device**
		3rd party device name	☞ Enter the name of the 3rd party device.
		3rd party device operation mode On | Off	☞ Select operation mode. **On:** The digital signal of the 3rd party device must be on the device's digital input so that the device does not shut down. **Off**: The device does not check whether a 3rd party device is integrated into the PV system.
		Password protection Status	1. Option to set password protection. 2. Confirm the action field.
		SPD monitoring	**NOTE: Opportunity to check the overvoltage protection with appropriate status messages.**
		SPD monitoring Status Password protection Status	1. Activate overvoltage protection. 2. Activate optional password protection. 3. Confirm the action field.
		Digital IO modules	**NOTE: Opportunity to use digital inputs/outputs via an expansion module (KACO accessory)**.
		DIO1 DIO2 DIO3 DIO4	↻ Expansion module detected at one of the two slots. 1. Select the logic of the 4 channels. 2. Confirm the action field.
		Relay	**NOTE: Opportunity to configure the fault signal relay [ERR].**
		Relay Positive logic | Negative logic inactive | active	1. Select the type of logic. 2. Select the form of activity. 3. Confirm the action field.
	1	Logging Management	**NOTE: Input screens for log and service data and default settings.**
		Settings	Specify the interval for data capture and base meters.
		User logging interval 1 | 5 | 10 | 15 [minutes]	☞ Specify the time period between 2 log data recordings.
		Service logging interval 0 – xxx [s]	☞ Specify the time period between 2 log data recordings.
		Yield counter 0 – xxx [kWh]	**NOTE: Opportunity to enter yield data when exchanging a device.** ☞ Enter the meter reading in the input field.

EN

Country-spec. Settings	Level	Display/ Setting	Action in this menu/meaning
	1 2 3 4	Operating hour counter 0 – xxx [hour]	**NOTE: Opportunity to transfer the operating hours of a replacement device.** 1. Enter the hours in the input field. 2. Confirm the action field.
	1 2 3 4	Analyze Log Data	**NOTE: All measurement data can be transferred to a USB stick by making individual and multiple selections.**
		User logs cosPhi | fac (Hz) | lac 1 (A) | lac2 (A) | lac3 (A) | idc (A) | Qac (var)	1. Select a date in the calendar. 2. Select measurement data from the dropdown field. 3. Update the measurement data. 4. Move the selected measurement data to the storage device or move the data selectively.
	1 2 3 4	Parameter Management	**NOTE: Option to reset set values as well as to import and export specific parameters.**
	1 2 3 4	Factory defaults	1. Compare country-specific /network-specific parameters with basic setting value. 2. If necessary, reset parameters using the "Restore" button.
		Export config	1. Display for exporting all parameters. 2. Assign password. 3. Select the parameters for export into a file or the plant manager.
		Import configuration	1. Select the parameter file using the "Browse" button. 2. Import the parameters using the "Upload" button.
	1 2 3 4	Password protection Country selection | Connection conditions | Advanced islanding detection | FRT | ... | ... |	1. Opportunity to set up password protection for individual parameters. 2. Confirm the action field.
	1 2 3 4	System / Maintenance	**NOTE: Fundamental system and maintenance data with the initial start-up installation assistant.**
	1 2 3 4	Firmware update	**NOTE: Opportunity to update the device. Parameter data are not overwritten when the firmware is updated.**
	1 2 3 4	Settings	**NOTE: Settings for updating the firmware via remote access.**
		Allow remote firmware update Status	☞ Activate remote access for updates. Enter `firmware update URL` . 1. Enter `user name` and `password`. 2. Specify the `start` and `end time` for the update. 3. Confirm the action field.
	1 2 3 4	Instant Update	1. Select and confirm the firmware update file via Browse... 2. Perform the upload.
	1 2 3 4	Check for Available software packages	↻ Network connection available. 1. Checks for available device updates online using the existing network connection. 2. Start the firmware update by clicking the button.

EN

Country-spec. Settings	Level	Display/ Setting	Action in this menu/meaning
	1 2 3 4	Installation Wizard	**NOTE:** The installation wizard is described in the chapter Start-up options [See section 8.4 Page 39]. When the installation process is complete, the text: Installation wizard was completed appears
	1 2 3 4	Service	**NOTE: Opportunity to specify the service interval.**
	1 2 3 4	Service Status Date | Yield | Date v Yield (first in)	1. Specify the service sequence. 2. Specify the service by date. 3. Specify the service by yield [kwh]. 4. Confirm the action field.
	1 2 3 4	Service Log	**NOTE: Display of all logged installations. You should also add all maintenance activities manually via the "Service" and "Installer" interface.** 1. Enter additional service activities (exception: "user" interface) 2. Export service logs on demand.
	1 2 3 4	Export Service Package	**NOTE: Possibility to send an error log to KACO new energy.** ☞ Press Export button and send file to our service staff.
	1 2 3 4	Network Statistics	**NOTE: Display of sent and received data packets** ☞ Press Update.
	1 2 3 4	Remote Access	When remote access is enabled, KACO can access the device remotely and assist you.**NOTE: .** ☞ Activate when prompted.
	1 2 3 4	History	**NOTE: Displays all of the actions performed in the system and on the web interface.**
	1 2 3 4	Account Management	1. Enter your User name. 2. Enter your new user-defined Password. **NOTE: The following is specific to KACO: Following initial start-up, it is necessary to** Change password
	1 2 3 4	Restart the Device	**NOTE: Transfer safety-related parameters to a storage medium.** ☞ If necessary, re-start the device.

NOTE

With regard to the selection of country settings, KACO new energy attests:

1. that the relevant certificates are only valid if the corresponding country settings have been selected.
2. that all configured grid parameters must be configured in accordance with the requirements of the grid operators.
3. that the configuration of parameters using IEEE 1547: 2003 table 1 is possible but is only permitted if it is requested by the grid operators.

NOTE

Setting values according to pictogram ⚙ refer only to the blueplanet 125TL3 device type. For your device please note the slider in the web interface.

EN

9.5 Monitoring the device

↻ You have connected the device to your network.

1. When using a DHCP server: Activate DHCP.
2. For manual configuration (DHCP off):
3. Open the Settings/Network menu.
4. Assign a unique IP address.
5. Assign a subnet mask.
6. Assign a gateway.
7. Assign DNS server.
8. Save your settings.

9.6 Performing a firmware update

NOTE

The DC power supply must be guaranteed during initial start-up.

The sequence of the settings required for initial start-up is preset in the configuration assistant.

⚠ CAUTION

Damage to the device from faulty power supply

The update can fail if the power supply is interrupted during the update process. Parts of the software or of the device itself may be damaged.

1. Never disconnect the DC and AC power supply for or during a firmware update.
2. Do not remove the USB stick during the firmware update.

NOTE

The firmware update can take several minutes. The “Operating” LED flashes during the update process. The device may restart several times as required.

Performing a firmware update

↻ Ensure that the power supply is connected.

1. Connect the USB stick to the device.
   ⇨ The message appears on the web interface: "Please select firmware package″ .
2. If you would like to perform the update, press the "`Yes`" button. If "`No`", pressing the "`Enter`" button cancels the update process and the device goes into feed-in mode.
   ⇨ The device begins the update.
   - During the update procedure, the message “WARNING: Firmware update is in progress, DO NOT TURN OFF THE POWER! The inverter will restart automatically after firmware update finished.” appears. The update has been imported in full when the message “Firmware update has finished. Please remove USB stick to restart!” appears.
3. When an error occurs, the update process must be repeated.

EN

9.7 Access via Modbus

NOTE

In order to make use of the Modbus functionality, we recommend using the “SunSpec-Modbus-Interface” specification we have made available for the firmware version installed on your device.

Follow the description in the document “Modbus-Protokol.pdf” in order to use the two Excel files with a high level of process reliability.

↻ Firmware version of device is identical to the specifications of the Sunspec® Modbus®.

1. Enable the entry `Network - Modbus TCP - Operation mode` / `Network services - Modbus TCP - Operation mode` in the menu on the device or on the web interface.
2. If necessary, allow `write access`.
3. Set up the `Port` for access. [Default: `502`]

⇨ Access via Modbus enabled.

9.8 Multi-function button

The two multi-function buttons on the underside of the device allow new firmware to be loaded on site, configurations to be loaded, network parameters to be reset and the device to be connected to and disconnected from the grid.

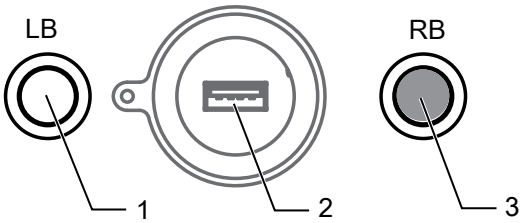

Fig. 62: Control elements on underside of device

1	Multi-function button on left	3	Multi-function button on right
2	Cover for USB port		

Depending on how long the buttons are held down for and the chosen button combination, multiple functions are available. The flashing sequence of the status LEDs on the front side of the housing provides information about each of the functions initiated by way of the multi-function buttons.

The following principles are applied when keys and LEDs are used:

- Briefly pressing the right-hand multi-function button (~ 0.5 sec.) serves to confirm that the desired function should commence.
- If the Operating LED and the Feed-in LEDs are flashing quickly and in tandem (~0.2 sec.), this indicates that a function has commenced.
- If the Operating LED and the Feed-in LEDs are flashing quickly yet alternately (~ 0.2 sec.), this indicates that a function is being performed (for functions that take a long time to complete, such as firmware updates).
- If the Operating LED and the Feed-in LEDs are flashing slowly and in tandem (~ 1 sec), this indicates that a function has been completed successfully.
- If the Fault LED is flashing slowly (~ 1 sec), this indicates that a function has not been completed successfully or a timeout has occurred at the confirmation stage.

Depending on how long the buttons are held down for and the chosen button combination, multiple functions are available. Information is provided by way of the flashing sequence of the 3 status LEDs on the housing cover.

Signal	Icon	LED status	Meaning	Note
●	⏻	"Operating" LED illuminated	Procedure in progress	

EN

Signal	Icon	LED status	Meaning	Note
		"Operating" LED and "Feed-in" LEDs flashing **in tandem**	Procedure completed successfully.	
		"Operating" LED and "Feed-in" LEDs flashing **quickly** and **in tandem**	Procedure has commenced.	
		"Operating" LED and "Feed-in" LEDs flashing **quickly yet alternately**	Procedure has commenced.	The procedure will: last up to 10 mins for firmware updates or up to 30 secs for parameter updates.
		"Fault report" LED **flashing quickly**	The procedure has **not** been completed successfully or a time limit for pressing a button again has elapsed.	
		"Fault report" **flashing slowly**		
			No fault	

9.8.1 Operation

Firmware update / configuration import using multi-function buttons

Action / step sequence	LB	RB				Notifications / function
☞ Insert a USB stick featuring the firmware update package or a configuration file into the USB port.						The import is aborted if none of these files are found.
-						**NOTE: Valid file found.**
☞ Briefly (< 1 sec) press the right-hand function button to commence the procedure.						Confirm that the procedure should commence.
-						Procedure is carried out.
-						Procedure completed. USB stick can be removed.
☞ Remove the USB stick.						-
-						**NOTE: Once the USB stick has been removed, the device reboots and features the updated data.**
NOTE: If a button is not pressed within 15 secs: no valid file found.						Procedure is aborted. USB stick can be removed.
NOTE: Procedure failed.						USB stick can be removed.

EN

Setting the network parameters to the factory defaults using the multi-function buttons

Action / step sequence	LB	RB				Notifications / function
☞ Press the left-hand function button (> 5 secs) to commence the procedure.						
-						
☞ Release the function key.						
☞ Press the right-hand function button (~0.5 secs) to commence the procedure.						Procedure is carried out.
-						Procedure completed. Network settings have been reset.
NOTE: If a button is not pressed within 15 secs: Procedure aborted.						

Connecting the device to the grid using the multi-function buttons

Action / step sequence	LB	RB				Notifications / function
NOTE: Starts from status "Device disconnected"						
☞ Press the right-hand function button (> 5 secs) to commence the procedure.						
-						
☞ Release the function key.						
☞ Briefly (< 1 sec) press the right-hand function button to commence the procedure.						Procedure is carried out.
-						Procedure in progress. Device is connected to the grid.
-						**NOTE: Device is on the grid!**
NOTE: If a button is not pressed within 15 secs: Procedure aborted.						

Disconnecting the device from the grid using the multi-function buttons

Action / step sequence	LB	RB				Notifications / function
☞ Press the right-hand function button (> 5 secs) to commence the procedure.						
☞ Release the function key.						
☞ Briefly (< 1 sec) press the right-hand function button to commence the procedure.						Procedure is carried out. Device is disconnected from the grid.
-						**NOTE: Device is disconnected from the grid.**
NOTE: If a button is not pressed within 15 secs: Procedure aborted.						.

EN

10 Specifications

10.1 Reactive power control

Reactive power can be used in electrical energy supply networks to bolster the level of voltage. As such, feed-in inverters can contribute to statistical voltage stability. Reactive power brings about a voltage drop at the inductive and capacitive components of the equipment which can either bolster or reduce the level of voltage. If the generating plant draws inductive reactive power while active power is being fed in, part of the voltage swing caused by the active power feed can be compensated for by the supply of reactive power.

This reactive power mode and the respective control process are specified by the grid operator. If no control process has been specified, then the system should be operated using a reactive power specification of 0%.

10.1.1 Operating power range depending on grid voltage

The device can be operated within the respective fixed voltage range provided. The maximum apparent power is stated in the following table. In the event of undervoltage determined by the maximum continuous current subject to the grid voltage.

Nachfolgen Abbildungen zeigen den Blindleistung-Betriebsbereich in Abhängigkeit der Wirkleistung und den Scheinleistungsbetriebsbereich Abhängig der Netzspannung für verschiedene Geräte.

KACO blue-planet 87.0 TL3 M1 WM OD IIF0 / KACO blue-planet 87.0 TL3 M1 WM OD IIFX	KACO blue-planet 92.0 TL3 M1 WM OD IIG0 / KACO blue-planet 92.0 TL3 M1 WM OD IIGX	KACO blue-planet 105TL3 M1 WM OD IIG0 / KACO blue-planet 105TL3 M1 WM OD IIGX	KACO blue-planet 110 TL3 M1 WM OD IIK0 / KACO blue-planet 110 TL3 M1 WM OD IIKX	KACO blue-planet 125 TL3 M1 WM OD IIP0 / KACO blue-planet 125 TL3 M1 WM OD IIPX	KACO blue-planet 125TL3 M1 WM OD IIK0/ KACO blue-planet 125TL3 M1 WM OD IIKX	KACO blue-planet 137 TL3 M1 WM OD IIP0 / KACO blue-planet 137 TL3 M1 WM OD IIPX	KACO blue-planet 150 TL3 M1 WM OD IIQ0 / KACO blue-planet 150 TL3 M1 WM OD IIQX	KACO blue-planet 155TL3 M1 WM OD IIP0/ KACO blue-planet 155TL3 M1 WM OD IIPX	KACO blue-planet 165TL3 M1 WM OD IIQ0 / KACO blue-planet 165TL3 M1 WM OD IIQX	Maximum apparent power [p.u.]
Voltage U_N: 380V	Voltage U_N: 400V	Voltage U_N: 400V	Voltage U_N: 270V / 480V	Voltage U_N: 600V	Voltage U_N: 480V	Span-nung U_N: 600V	Voltage U_N: 660V	Voltage U_N: 590V	Voltage U_N: 630V	
-	-	-	-	≥ 600	≥ 475	-	-	-	-	1,10
≥ 380	≥ 400	≥ 380	≥ 480	545	475	≥ 600	≥ 660	≥ 590	≥ 630	1,00
361	380	361	456	520	450	570	622	560	595	0,95
342	360	342	432	492	430	540	590	530	564	0,90

Tab. 8: Maximum continuous apparent power depending on grid voltage

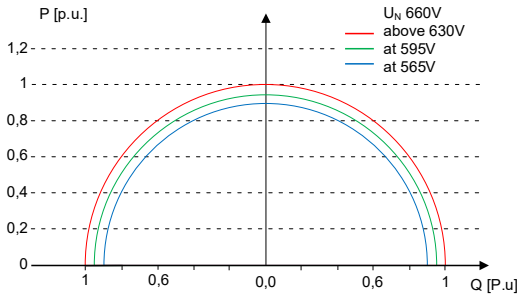

Fig. 63: P-Q operating range for bp 165TL3 (Qmax=Smax)

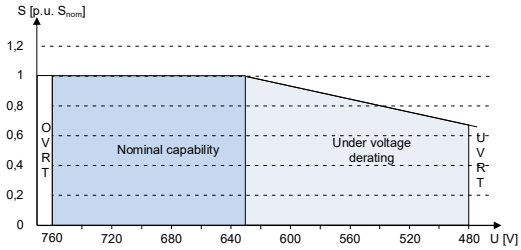

Fig. 64: Apparent power subject to the grid voltage for bp165TL3

EN

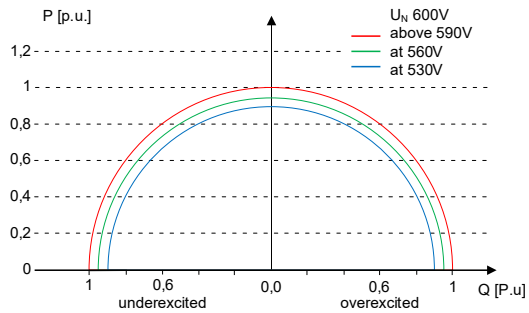

Fig. 65: P-Q operating range for bp 155TL3 (Qmax=Smax)

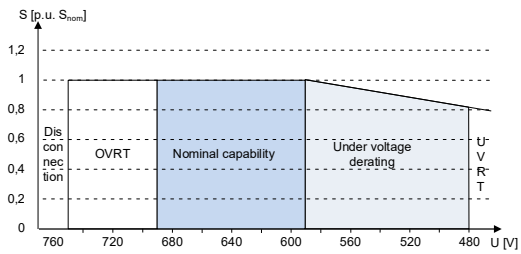

Fig. 66: Apparent power subject to the grid voltage for bp155TL3

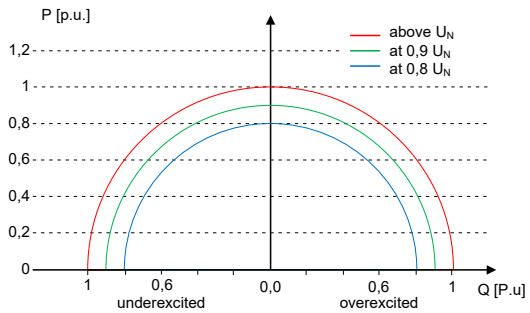

Fig. 67: P-Q operating range for bp 150 TL3 (Q_{max}=S_{max})

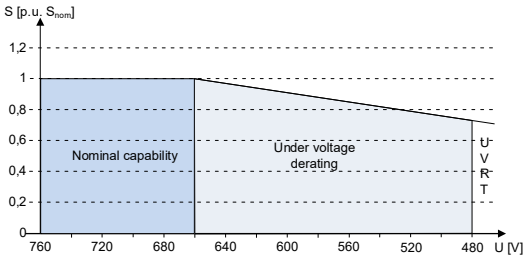

Fig. 68: Apparent power subject to the grid voltage bp 150TL3

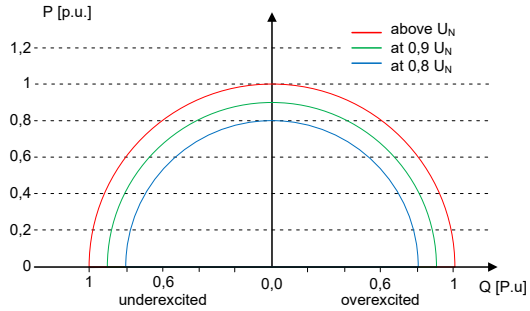

Fig. 69: P-Q operating range for bp 137 TL3 (Q_{max}=S_{max})

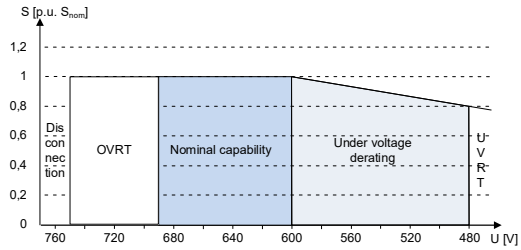

Fig. 70: Apparent power subject to the grid voltage bp 137TL3

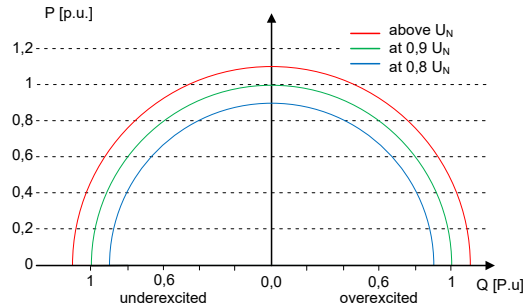

Fig. 71: P-Q operating range for bp 125 TL3 (Q_{max}=S_{max})

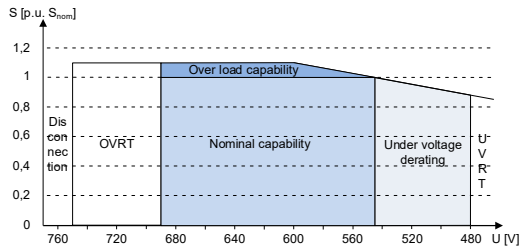

Fig. 72: Apparent power subject to the grid voltage bp 125TL3

EN

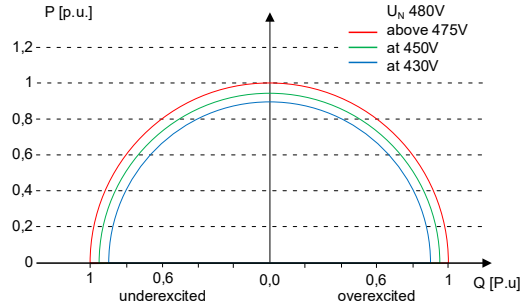

Fig. 73: P-Q operating range for bp 125TL3 (Qmax=Smax) U_N480V

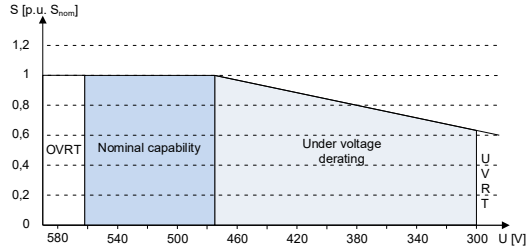

Fig. 74: Apparent power subject to the grid voltage for bp125TL3 U_N480V

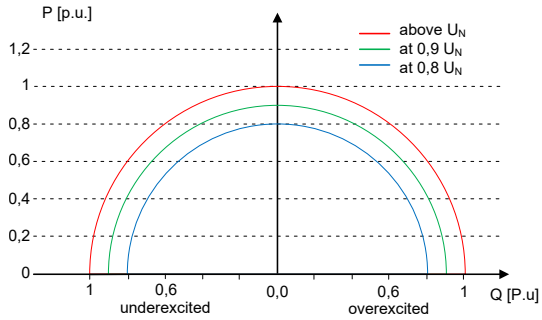

Fig. 75: P-Q operating range for bp 110 TL3 (Q_{max}=S_{max})

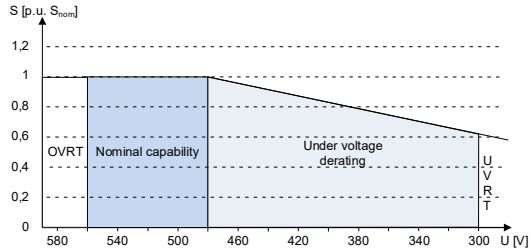

Fig. 76: Apparent power subject to the grid voltage bp 110TL3

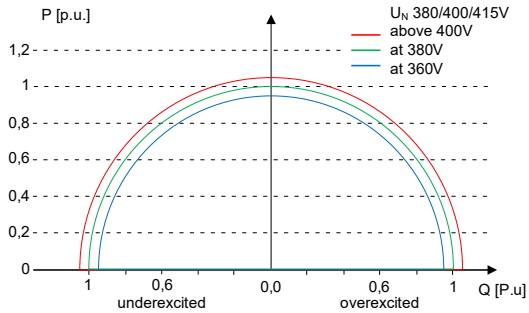

Fig. 77: P-Q operating range for bp 105TL3 (Qmax=Smax)

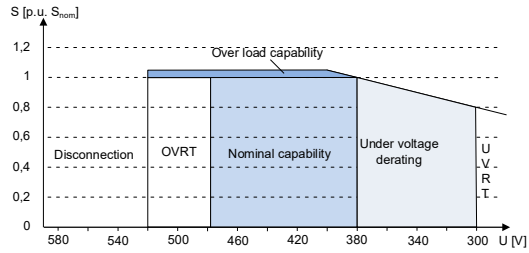

Fig. 78: Apparent power subject to the grid voltage for bp 105TL3

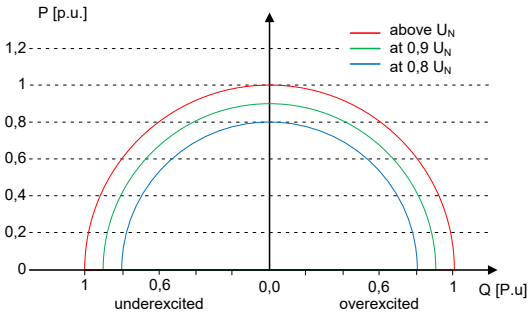

Fig. 79: P-Q operating range for blueplanet 92.0TL3 (Q_{max}=S_{max})

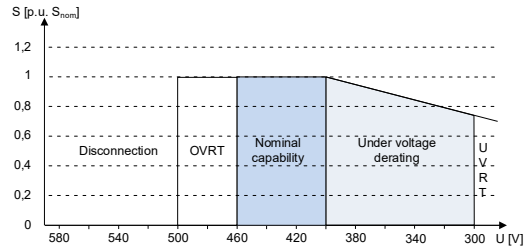

Fig. 80: Apparent power subject to the grid voltage bp 92.0TL3

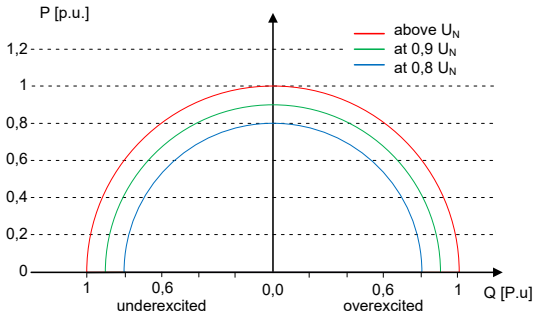

Fig. 81: P-Q operating range for blueplanet 87.0TL3 (Qmax=Smax)

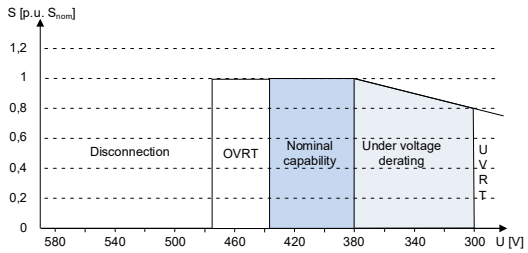

Fig. 82: Apparent power subject to the grid voltage bp 87.0TL3

10.1.2 Dynamics and accuracy

In all control methods the specified target value at the inverter's connection terminals is adjusted using a stationary deviation of the reactive power of maximum 2% S_N. This maximum deviation always relates to the specified value as reactive power. If the shift factor cos ϕ is specified in the control method, then the deviation relates to the reactive power value brought about by the current power level.

The transient response of the control methods is determined by a PT-1 filter. In this case, the settling time corresponds to 5 Tau, or in other words, achieving approx. 99% of the final value for a PT-1 filter. Subject to the control method selected, there are also other parameters that determine dynamic behaviour.

10.1.3 Reactive power functions

The following functions for controlling the reactive power are implemented in the devices listed above:

- cos φ constant
- Q constant
- cos φ /(p/pn)
- Q(U) 10 nodes
- Reactive power is prioritised in each method. The maximum possible active power that can be fed in is reduced in line with the P-Q operating range when a specific reactive power level is specified.

cos ϕ constant

In cos-φ constant mode the specified displacement factor cos-φ is set permanently by the inverter. In doing so, the reactive power level is set according Q=P*tan φ dependent on power output which produces the specified displacement factor cos-φ continuously. If the specification is changed, the new value is adopted attenuated by a filter. The transient time is 1 s with the transient response of a first-order filter (PT-1) with a time constant of Tau=200ms. The specified displacement factor may be configured in the display or via communication, via KACO RS485 protocol and MODBUS/SunSpec.

If the applicable grid code requires the cos-φ response to set point by a defined gradient or settling time slower than the configured Tau=200ms, this gradient or settling time must be implemented in the plant control system.

Q constant

In Q constant mode, the specified reactive power value is set permanently by the inverter. If the specification is changed, the new value is adopted attenuated by a filter. The transient time is 1s with the transient response of a first-order filter (PT-1) with a time constant of Tau=200ms. The specified reactive power may be configured in the display or via communication, via KACO RS485 protocol and MODBUS/SunSpec.

cos ϕ /(P/Pn)

In cos ϕ/(P/Pn), mode, the set value of cos-φ and, derived from this, the set value of the reactive power is calculated continuously as a function of the actual power level. This function ensures that grid support is provided by the reactive power when a significant voltage increase is anticipated due to a high feed.in level. A characteristic curve is specified which can be used to configure up to 10 nodes, value pairs for active power and cos ϕ. The active is entered as a % in relation to the nominal power. Other parameters allow to limit functionality and to limit activation to certain voltage range.

EN

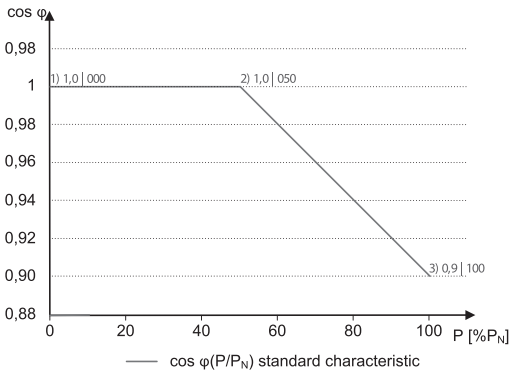

Fig. 83: cos φ / (P/Pn) standard characteristic curve with 3 nodes

Q(U)

In Q(U) 10 nodes mode, the set value of the reactive power is calculated continuously as a function of the grid voltage. This function ensures that grid support is provided by reactive power as soon as the voltage actually deviates from the target voltage. In this case, a characteristic curve is specified which can be used to configure up to 10 nodes, value pairs for voltage and reactive power. Other parameters allow to limit functionality and to limit activation to certain power levels as well as parametrize the transient response.

The positive sequence voltage is used to calculate the reactive power target value for three-phase units.

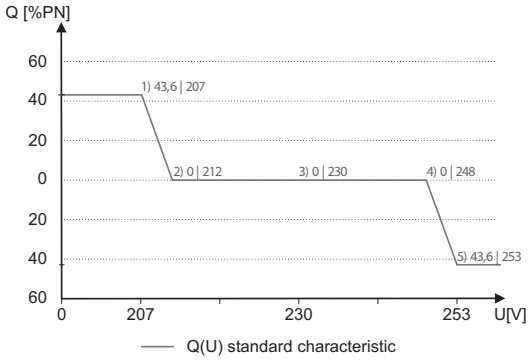

Fig. 84: Q(U) standard characteristic curve with 5 nodes

10.1.4 Parameters for reactive power control

Country-spec. Settings	Menu level	Display/ Setting	Action in this menu/meaning
		cos-phi const. 1 – 0.3	Specified displacement factor
		Over-excited | under-excited	Reactive power mode Under-excited relates to inductive load, over-excited relates to capacitive load.
		Q constant 0 – 100 [% S_{max}]	Specification as a % of the maximum power
		Under-excited | over-excited	Reactive power mode Under-excited relates to inductive load, over-excited relates to capacitive load.
		cos-phi(P/Plim)	
		Settling time 200 – 30000 [ms]	Determines the dynamic behaviour in the event of a change in the cos ϕ set value. With a change of the active power or the lock-in and lock out voltage, the cos ϕ is changed according to a PT-1 characteristic curve with a settling time of 5 Tau.
		Lock-in voltage 23V – 287V	The control is activated above this voltage.

EN

Country-spec. Settings	Menu level	Display/ Setting	Action in this menu/meaning
		Lock-out voltage 23V – 287V	The control is deactivated below this voltage.
		Number of nodes 2 – 10	Specify the number of nodes for the cos ϕ/(p/pn) characteristic curve
		1st node … 10th node Voltage | Reactive power | Excitation 0 – 100 [% S_{max}]	Power of the node as a percentage of the maximum power. For the 1st node, the power must be 0%; for the last node, the power must be 100%. The power values of the nodes must increase continuously. Note: Storage inverters only for feed-in operation
		0 – 100%	cos ϕ of the node
		Over-excited | under-excited	Reactive power mode Under-excited relates to inductive load, over-excited relates to capacitive load.
		Q(U) 10 nodes	
		Lock-in power 0 – 100 [% S_{max}]	Power threshold, function is activated if limit value is exceeded.
		Lock-out power 0 – 100 [% S_{max}]	Power threshold, function is activated if limit value is undershot.
		Lock-in time 0 – 60 [s]	Length of time that the active power must remain below the lock-in power level before control is deactivated.
		Lock-out time 0 – 60 [s]	Length of time that the active power must remain below the lock-out power level before control is deactivated.
	1 2 3 4	Downtime 0 s – 10 s	☞ Set the intentional delay for the start of the Q(U) function. **NOTE: If the voltage switches from a characteristic curve section with Q=0 to a characteristic curve section with Q≠0 under active control, then the reactive power setting process is delayed by the set dead time. Once the dead time has expired, the control circuit is no longer subject to a delay and the set settling time determines the transient behaviour.**
		Rise Outg. grad. & Fall. Outg. grad. increasing | decreasing	In addition to configuring the dynamic behaviour using the transient time corresponding to a first-order filter, the reactive power setting can be determined by a maximum gradient - this means the maximum change in the reactive power per time period.
		1 – 60000 [% S_{max}/min]	Maximum change in the reactive power %S_N/min in the event of a change to over-excited mode **NOTE: The gradient is overlaid with the settling time.**
		Min. cos-phi Q1 - Min. cos-phi Q4	In the event of a significant voltage deviation, the maximum reactive power adjustment range can be limited by a minimum cos ϕ factor in order to prevent an excessive reactive power supply and, as a result, a significant reduction in the maximum active power that can be fed in.
		Q1	Minimum cos ϕ in over-excited operating mode (in-feed).
		Q4	Minimum cos ϕ in under-excited operating mode (in-feed).
		Q2	Minimum cos ϕ in over-excited operating mode (charge).
		Q3	Minimum cos ϕ in over-excited operating mode (charge).

EN

Country-spec. Settings	Menu level	Display/ Setting	Action in this menu/meaning
		Priority mode Q priority | P priority	P priority can be selected as an alternative to the standard setting Q priority. When it comes to P priority, the reactive power adjustment range is limited subject to the limited apparent power of the inverter and the active power that is currently available and fed in.
		Active curve 1 – 4	Up to four characteristic curves can be configured independently and one of them can be activated for regulation each time.
		Reset the curve	Reset active curve to the factory setting, depending of the country setting.
		Number of nodes 2 – 10	Specify the number of nodes for the Q(U) characteristic curve.
		1st node … 10th node 0V - Max. voltage in continuous operation	Voltage of the node in volts. The voltage values of the nodes must increase continuously. At voltages below the 1st node and voltages above the last node, the reactive power value of the 1st or last node is used each time.
		1 – 0.3	Reactive power of the node as a percentage of the maximum power
		Over-excited | under-excited	Reactive power mode Under-excited relates to inductive load, over-excited relates to capacitive load.

10.2 Active power regulation

Methods for regulating the active power of feed-in inverters may be necessary for local management of load flows, for voltage stability in the distribution network and for ensuring the stability of the interconnected grid.

The communication functions `P limit` and `P set` are available for managing load flows in a plant. If necessary, this can be used to reduce the feed of the inverter.

If voltage surges in the upstream distribution network cannot be compensated sufficiently by the absorption of reactive power, it may be necessary to adjust the active power. In this case, P(U) control is available to make optimum use of the absorption capacity of the upstream grid.

Feed-in inverters must participate in frequency maintenance in the interconnected grid. If the grid frequency leaves the normal tolerance band (e.g. ±200 mHz), a critical grid condition exists. Overfrequency is a generation surplus, underfrequency is a generation shortage. With overfrequency, photovoltaic systems and electricity storage systems must reduce their effective feed-in power relative to the frequency increase. The function P(f) is available for this purpose. .

However, depending on the selected country setting, the availability or adjustability of the functions may be limited. This is particularly the case if the applicable grid connection directive requires this restrictiont.

Dynamics / accuracy

In all of the control methods described below the specified target value at the inverter's connection terminals is adjusted using a stationary deviation of the reactive power of maximum $2\%_N$ SN.

The transient response of the control methods is determined by a PT-1 filter. In this case, the settling time corresponds to 5 Tau, or in other words, achieving approx. 99% of the final value for a PT-1 filter. Subject to the control method selected, there are also other parameters that determine dynamic behaviour.

Methods for active power regulation

Methods for regulating the active power of feed-in inverters may be necessary for local management of load flows, for voltage stability in the distribution network and for ensuring the stability of the interconnected grid.

The device makes use of the following functions in order to regulate the active power. These are described in the following section:

EN

- P target value (MPPT/communication) Active power limitation [See section 10.2.1 Page 81]
- P limit (communication) Active power limitation [See section 10.2.1 Page 81]
- P(U) (characteristic curve) Voltage-dependent power reduction P(U) [See section 10.2.2 Page 83]
- P(f) (characteristic curve) P(f) [See section 10.2.3 Page 84]

10.2.1 Active power limitation

The function “P target value” is integrated into the MPP tracking of the inverter on all PV inverters. The P target value is continuously re-calculated on the basis of the MPP tracking algorithm.

P limit

The function “P limit” is available for limiting the maximum feed-in power. If necessary, this can be used to reduce the feed of an inverter, e.g. for managing bottlenecks for the operator of the distribution grid.

P limit is only available via the MODBUS/SunSpec inverter model 123 `WMaxLimPct` and via RS485 communication. You can find detailed information on the communication protocol at www.kaco-newenergy.de in the “Software” subsection of the “Downloads” section.

When a target value is received for P limit, the output power of the inverter is limited to the specified power value. If the limit value is changed, the new value is adopted by way of a filter and a gradient limitation. The current power may be below the specified limit value because the available power (PV) or the target power value (storage) may be below the specified limit value. Depending on the inverter series, the settling time and gradient limitation may be adjustable.

Power Limitation [`WMaxLimPct`]	⚙ 0 – 100 [%]	SUNSPEC XLS	Specifies the standard power in the event of a communication failure. If no active power command is received within the configured timeout, the inverter sets the power to the configured fallback power.
Timeout [`WMaxLimPct_RvrtTms`]	⚙ 3 – 100000 [%]	SUNSPEC XLS	Specifies the timeout time after which the inverter sets the fallback power in the event of a communication failure.
Increasing output gradient [`WMaxLimPct_RmpTms`] & Decreasing output gradient [`OutPFSet_RmpTms`]	⚙ 1 – 65534 [% S_{max}/min]	SUNSPEC XLS	Determines the dynamic behaviour in the event of a change in the active power set value. The active power is changed with the specified gradient. **NOTE: The gradient is overlaid with the settling time.**
Settling time [`VArPct_RmpTms`]	⚙ 200 – 60000 [ms]	SUNSPEC XLS	Determines the dynamic behaviour in the event of a change in the active power set value. The active power is changed according to a PT-1 characteristic curve with a settling time of 5 Tau.

EN

NOTE: The settling time is overlaid with the increasing and decreasing gradient.

If the applicable grid connection guidelines call for the active power to be adjusted to the target value with a defined gradient or a defined settling time, then the device can be configured in such a way that this gradient is adhered to. In addition, the gradient can also be implemented on the plant controller. This second solution is to be used for all other inverters.

Limitation of power gradients

The power reduction parameters can be adjusted in SunSpec model DID123. During this process, you should also check whether internal and/or external power reduction is active.

Internal power limitation	Parameters for external power limitation	Parameters for power limitation
Status = active	Status = active	Parameters in SunSpec model 123:
Maximum apparent power S_{lim}= **100000 VA**		"WMaxLimPct" = 50% P_{lim} (**approx. 40000 W**)
Maximum active power P_{lim}= **80% (approx. 80000 W)**	AC fallback active power Pfb = **75%** P_{lim} **(approx. 60000 W)**	"WMaxLimPct_RvrtTms" = **60 s** "WMacLimPct_RmpTms" = **2 s**
	PT1 settling time = 1 s	"WMaxLim_Ena" = **1**

Tab. 9: Sample parameters for power limitation

If the ramp time "`WMacLimPct_RvrtTms`" in the SunSpec model is specified as 0 s, then the internal output gradient is used. Otherwise, the set value will be used.

Irrespective of the communication protocol used, the settling time "`WMaxLim_Ena`" is used in order to transfer the new power value. Otherwise, the internally configured value will be used.

The additional ramp time "`WMacLimPct_RmpTms`" specifies the jump time from a power value to the new power value.

The following formulae are used to calculate the gradient $S_{lim/min}$:

$$\text{GradientWattPerMin} = \frac{\left(\frac{WMaxLimPct}{100} \times Plim - Pactual\right)}{WMaxLimPct_{RmpTms}} \times 60 \times \frac{100}{Slim}$$

$$\text{GradientWattPerMin} = \frac{\left(\frac{50\%}{100} \times 40000\,W - 60000\,W\right)}{2\,s} \times 60 \times \frac{100}{100000\,VA}$$

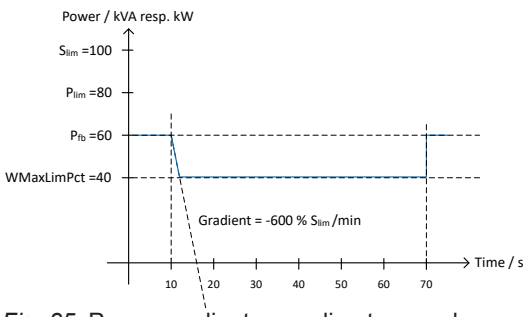

Fig. 85: Power gradient according to sample parameters and calculation

The following formulae are used to calculate the Q filter parameter and cos-phi gradient:

$$\text{GradientVArPerMin} = \frac{\left(\frac{VArMaxPct}{100} \times Slim - Qactual\right)}{VArPct_RmpTms} \times 60 \times \frac{100}{Slim}$$

Fig. 86: Formula for calculating the Q filter parameter

$$\text{GradientVArPerMin} = \frac{\left(\frac{VArMaxPct}{100} \times Slim - Qactual\right)}{OutPFSet_RmpTms} \times 60 \times \frac{100}{Slim}$$

Fig. 87: Formula for calculating the cos-phi gradient (internal power gradient)

EN

10.2.2 Voltage-dependent power reduction P(U)

If it is not possible to compensate adequately for increase in voltage in the upstream distribution network by intake on reactive power, it may be necessary to curtail the active power. In this case, P(U) control is available for making optimum use of the capacity of the upstream grid.

P(U) control reduces the active power that is fed in as a function of the grid voltage using a prescribed characteristic curve as a basis. P(U) control is implemented as an absolute power limit. The actual power of the inverter may vary freely below this limit due to a possible fluctuation in the available power or the target value, but at no time increases above the absolute power limit.

[See figure 88: Example characteristic curve without hysteresis [▸ Page 83] and [See figure 89: Example characteristic curve with hysteresis and a deactivation threshold below the activation threshold [▸ Page 83] are two examples of configuration. In figure 1 without hysteresis, the function is activated as soon as the voltage exceeds the configured voltage of data point 1 (dp1). The power limit follows the characteristic curve, a straight line between dp1 and dp2. The function is deactivated as soon as the voltage falls below dp1. In [See figure 89: Example characteristic curve with hysteresis and a deactivation threshold below the activation threshold [▸ Page 83], the function is activated as soon as the voltage exceeds the configured voltage of dp2. In this case, dp1 does not result in activation of the function because the power limit remains at 100%. The power limit follows the characteristic curve, a straight line between dp2 and dp3. However, because hysteresis is activated, the power limit is not increased when the voltage drops. The function is deactivated as soon as the voltage falls below dp1.

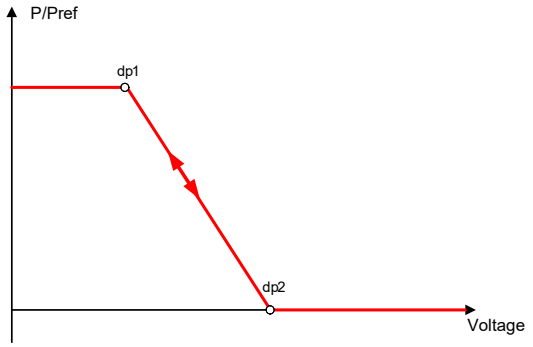

Fig. 88: Example characteristic curve without hysteresis

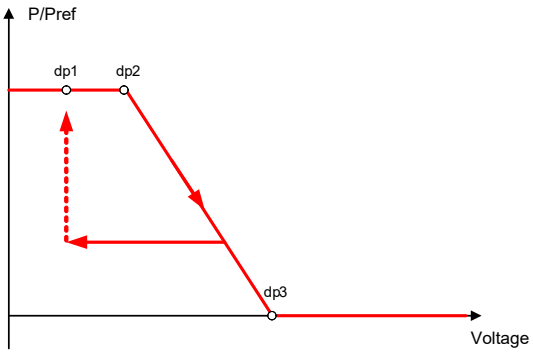

Fig. 89: Example characteristic curve with hysteresis and a deactivation threshold below the activation threshold

10.2.2.1 Parameters for P(U)

Country-spec. Settings	Menu level	Display/ Setting	Action in this menu/meaning
	1 2 3 4	P(U) operation mode Off | On	☞ Activate the control process. **Off**: Deactivates dynamic grid support using dynamic reactive current. Dynamic grid support remains active on account of immunity to interference.
		Reference power Actual power | Nominal power	Specifies the power reference for the characteristic curve. 100 % here corresponds to the nominal power or the actual power at the time the function was activated, the time when the voltage passes the configured node.
	1 2 3 4	Evaluated voltage Maximum phase voltage | Positive phase sequence voltage	☞ Select the voltage to be rated. Specifies which voltage is evaluated in a three-phase system.

EN

Country-spec. Settings	Menu level	Display/ Setting	Action in this menu/meaning
		Hysteresis mode Off | On	**Off:** In non-hysteresis mode, the active power is increased immediately with dropping voltage. **On:** In hysteresis mode, the power is not increased with dropping voltage. .
		Deactivation gradient 0 – 65534 [% / min]	If the available power is above the actual output at the time of deactivation, the power increase back to the maximum power is limited. The limitation is implemented by an absolute power limitation that increases with a continuous gradient up to the maximum power. The actual power of the inverter may vary freely below this limit due to a possible fluctuation in the available power or the target value, but at no time increases above the absolute power limit.
		Deactivation time 0 – 60000000 [ms]	Only evaluated with activated hysteresis mode: Monitoring time during which the voltage must remain below the lowest configured node before the function is deactivated.
		Settling time 100 – 1200000 [ms]	Determines the dynamic behaviour in the event of a change in the active power set value. With a voltage change, the active power is changed according to a PT-1 characteristic curve with a settling time of 5 Tau. Note: The settling time is overlaid with the increasing and decreasing gradient.
		Number of nodes Power 0,0 – 100,0 [% P_{ref}] Voltage 80 – 125 [% U_{nom}]	Up to five nodes for voltage [V] and power [% Pref] are configurable. The power value of the first and last value pair is also used as the maximum or minimum active power value that is valid across the limits of the characteristic curve.
		Active curve 1 - 5	☞ Select active curve. **NOTE: Up to 5 characteristic curves can be configured independently and one of them can be activated for regulation each time.**

10.2.3 P(f)

Adjusting the active power P(f) in the event of overfrequency

Feed-in inverters must assist with frequency stability in the grid. If the grid frequency leaves the normal tolerance range (e.g. ±200 mHz), then the grid will be in a critical state. In the event of overfrequency, there is a generation surplus, in the event of underfrequency, there is a generation deficit.

PV systems must adapt their feed-in power relative to the frequency deviation. In the event of overfrequency, the power adjustment is determined by a maximum feed-in limit. The actual power of the inverter may vary freely below this limit due to a possible fluctuation in the available power or the target value, but at no time increases above the absolute power limit.

$$P_{max-limit} = P_M + \Delta P$$

Fig. 90: Equation 1

$$\Delta P = g \cdot P_{ref} \cdot (f_1 - f)$$

Fig. 91: Equation 2

Equation 1 [See figure 90: Equation 1 [▸ Page 84] defines the maximum limit with ΔP relevant to 2 [See figure 91: Equation 2 [▸ Page 84], P_M the current power at the time of activation and P_{ref} the reference power. In the case of PV inverters from KACO, P_{ref} is defined as P_M, the current power at the time of activation. f is the current frequency and f_1 is the specified activation threshold.

EN

$$\Delta P = \frac{1}{s} \times \frac{(f_1 - f)}{fn} \times Pref$$

Fig. 92: Equation 3

$$g = \frac{1}{s \cdot f_n}$$

Fig. 93: Equation 4

In some standards, the power adjustment is specified by a drop (s) instead of a gradient (g), as shown in equation 3 [See figure 92: Equation 3 [▸ Page 85]. The drop s can be transformed into a gradient g in accordance with equation 4 [See figure 93: Equation 4 [▸ Page 85].

The frequency f remains above the activation threshold f_1 during an overfrequency incident. Consequently, the expression $(f_1 - f)$ is negative and ΔP corresponds to a reduction in the feed-in power.

The measurement accuracy of the frequency is greater than 10 mHz.

The specific mode of operation of the function is specified by the grid operator or the pertinent standards or the grid connection guidelines. The configurability of the function makes it possible to satisfy a wide variety of standards and guidelines. Certain configuration options are not available in some country settings because the pertinent standards or grid connection guidelines prohibit adjustments.

Adjusting the active power P(f) in the event of underfrequency

Some grid connection guidelines also require adjustment of the active power P(f) in the event of underfrequency. Due to the fact that PV systems are typically run at the maximum power point, there are no power reserves for increasing the power in the event of underfrequency.

However, in the event that the system power is reduced due to market regulation, it is possible to increase the active power up to the power level available. Because the inverter is unable to distinguish between P constant target values for obligatory bottleneck management by the grid operator and for market regulation, this needs to be implemented in the site-specific infrastructure of system control.

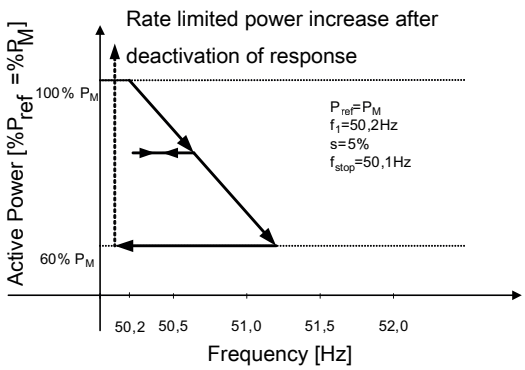

Fig. 94: Example behaviour with hysteresis (mode 1)

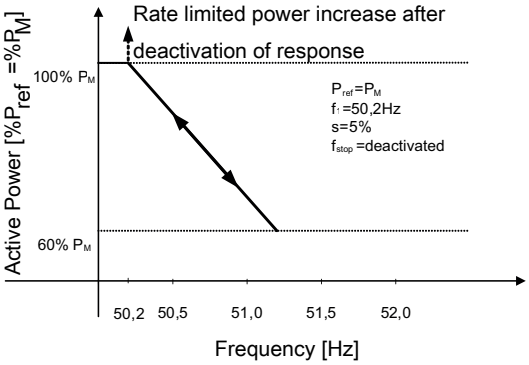

Fig. 95: P(f) example characteristic without hysteresis Mode 2

10.2.3.1 Parameters for P(f)

Country-spec. Settings	Menu level	Display/ Setting	Action in this menu/meaning
		P(f) operation mode ☑☰ Off | Mode 1 | Mode 2	Activate or deactivate function. **Mode 1:** With hysteresis activated. See figure 3. **Mode 2:** Without hysteresis activated. --- FEHLENDER LINK ---

EN

Country-spec. Settings	Menu level	Display/ Setting	Action in this menu/meaning
		Power reference mode with overfrequency Actual power | Nominal power Power reference mode with underfrequency Actual power | Nominal power	**Power reference with overfrequency:** Power reference for power adjustment as in equation 6 and equation 7 for overfrequency incidents. **Power reference with underfrequency:** Power reference for power adjustment as in equation 6 and equation 7 for overfrequency incidents.
		Activation threshold with overfrequency 50.2 – 70 (Hz) Activation threshold with underfrequency 40 – 45 (Hz)	**Activation threshold (f1) overfrequency:** Determines the frequency threshold for activating the function in case of overfrequency incidents. The active power adjustment is activated if the frequency rises above the configured value and mode 1 or 2 is activated. In mode 2, the function is deactivated if the frequency falls below the configured value. **Activation threshold (f1) underfrequency:** Determines the frequency threshold for activating the function in case of underfrequency incidents. The active power adjustment is activated if the frequency falls below the configured value and mode 1 or 2 is activated. In mode 2, the function is deactivated if the frequency rises above the configured value.
		P(f) intentional delay 0 – 5000 [ms]	The activation of the function based on the activation threshold is delayed by the configured time. Note 1: This function is regarded as critical for the stability of the transmission grid and is therefore prohibited by several national grid connection regulations. Note 2: This function is stipulated as a requirement by some domestic grid connection directives in order to prevent any negative impact on island detection. However, P(f) has no negative impact on KACO's enhanced island detection.
		Frequency of the maximum deactivation threshold 45 - 50.2 (Hz) Frequency of the minimum deactivation threshold 45 – 50.2 (Hz)	**Deactivation range lower limit:** Only evaluated in mode 1. The function is deactivated if the frequency returns to the deactivation range and remains in this range for the duration of the deactivation time. **Deactivation range upper limit:** Only evaluated in mode 1. The function is deactivated if the frequency returns to the deactivation range and remains in this range for the duration of the deactivation time.
		P(f) deactivation time 0 – 3600 [s]	Only evaluated in mode 1. The function is deactivated if the frequency returns to the range between the minimum and maximum deactivation threshold and remains in this range for the duration of the deactivation time.

EN

Country-spec. Settings	Menu level	Display/ Setting	Action in this menu/meaning
		P(f) deactivation gradient 0 – 65534 [% / min]	If the available power is above the actual output at the time of deactivation, the power increase back to the maximum power is limited. The limitation is implemented by an absolute power limitation that increases with a continuous gradient up to the maximum power. The actual power of the inverter may vary freely below this limit due to a possible fluctuation in the available power or the target value, but at no time increases above the absolute power limit.
		Dynamic gradient mode On | Off	☞ Activate dynamic gradient.
		Maximum dynamic gradient frequency 50.22 – 70.5 [Hz] Minimum dynamic gradient frequency 45 – 50 [Hz]	**Dynamic gradient maximum frequency:** If dynamic gradient mode is activated, the gradient is calculated in order to guarantee a linear power adjustment and reach the maximum charging power if the frequency rises to the maximum configured frequency. **Dynamic gradient minimum frequency:** If dynamic gradient mode is activated, the gradient is calculated in order to guarantee a linear power adjustment and reach the maximum feed-in power if the frequency drops to the minimum configured frequency.
		P(f) settling time 200 – 2000 [ms]	Determines the dynamic behaviour in the event of a change in the active power limit. In the event of a change in frequency, the active power is altered subject to a PT-1 characteristic curve using a settling time of 5 Tau. The settling time is overlaid with the increasing and decreasing gradient.
		Output gradient limitation increase & Output gradient limitation decrease 1 - 65534 [% / min]	☞ Specify the increasing and decreasing output gradient. Specifies the dynamic response on changing the active power for power increase and decrease. With a voltage change, the active power is changed with the specified gradient. Note: The gradient is overlaid with the settling time.
		Output gradient limitation increase & Output gradient limitation decrease 1 - 65534 [% / min]	☞ Specify the increasing and decreasing output gradient. Specifies the dynamic response on changing the active power for power increase and decrease. With a voltage change, the active power is changed with the specified gradient. Note: The gradient is overlaid with the settling time.

10.3 FRT

Dynamic grid support (Fault Ride Through)

A generator plant's ability to remain immune to voltage dips and voltage swells in the supply system is a key element in establishing a reliable energy supply. Immunity to interference ensures that brief disruptions do not result in a loss of generation capacity in a larger area of the interconnected grid. Grid support by way of fast fault current injection also limits the spatial extent of the incident.

With its dynamic grid support by way of immunity, the device has this characteristic. The ability to remain on the grid is particularly relevant. The protective settings also determine the device's ability to remain on the grid or not. Protective settings take the upper hand over the capacity of immunity to interference.

EN

10.3.1 Dynamic grid support by way of immunity to interference

Interference immunity against undervoltage

Voltage drop above the limit curve in can be overcome without the need for shutdown from the grid. The feed-in power remains constantly within the limits of the maximum continuous current of the inverter.

If a reduction in power occurs, the power is brought back up to the pre-fault level within 100 ms of the voltage returning.

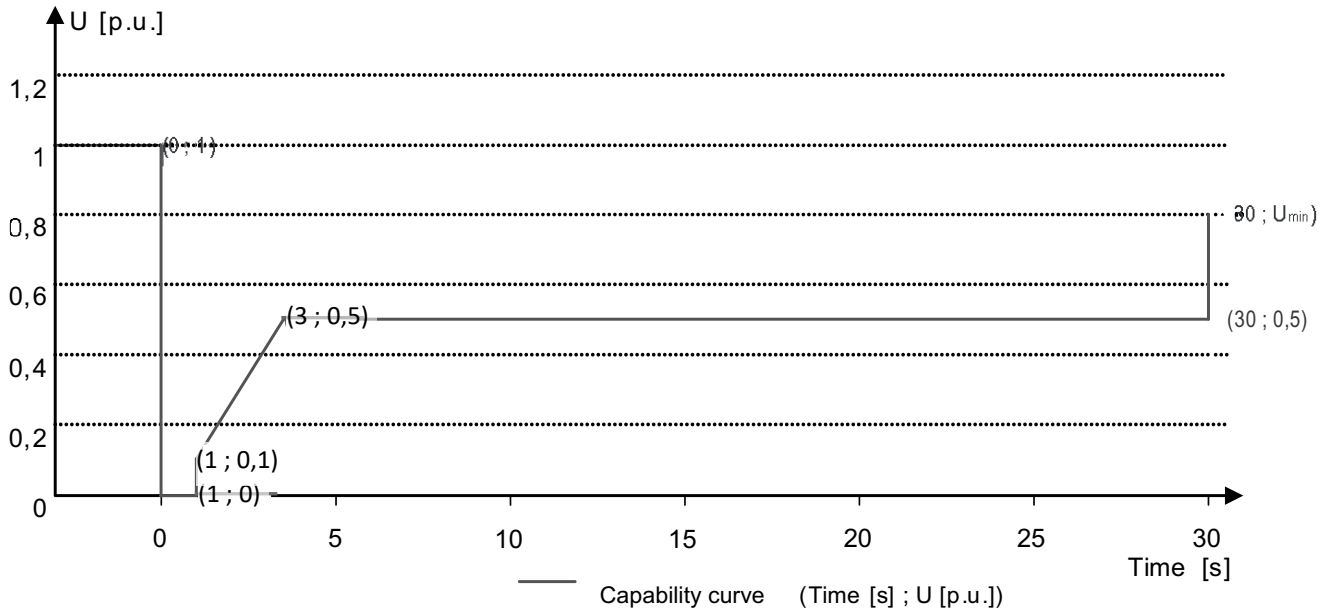

Fig. 96: Immunity to voltage dips characteristic curve relative to the nominal voltage

The inverters can ride through voltage swells provided the voltage level does not remain above the continuous operation voltage range for longer than 100 s and does not increase beyond the short-term max. operating voltage range (up to 100s). The values specific to each inverter can be found here.

The interface protection (voltage,frequencey, ant-islanding) integrated in the inverter is configurable in a range allowing the behaviour above. However, if the interface protection setting is limiting the voltage time characteristic, the interface protection will trip and interrupt the ride through as configured.

10.3.2 Dynamic grid support using a fast feeding of residual current

When dynamic grid support using a fast feeding of residual current is activated, then residual current is fed in in addition to the immunity to interference properties against drops and spikes described above.

The inverter adapts its current feed as soon as a drop or spike incident occurs in order to bolster the grid voltage. The support takes place in the event of voltage drop in the form of over-excited reactive current (corresponds to a capacitive load), in the event of voltage spike in the form of over-excited reactive current (corresponds to an inductive load). In the reactive current priority mode, the effective current is reduced to the extent necessary to comply with the limits of the maximum continuous current of the inverter.

A dip or swell is detected if either the normal operating voltage range setting is exceeded by at least one phase-phase or phase-neutral voltage, or if a step in the positive or negative sequence component of the voltage greater than the deadband setting occurs. The magnitude of the voltage step of the positive and negative sequence voltage equates to the difference between the pre-fault voltage and the actual voltage based on the reference voltage. The pre-fault voltage is calculated as a 50-periods mean value.

$$\Delta u = \frac{U - U50per}{Uref}$$

Fig. 97: Formula no. 1

EN

The reactive current is adapted using a response time of <20 ms and a transient time of <60 ms after the incident has occurred. Responses to changes in the voltage during the incident or to the voltage recovery at the end of the incident take place with the same dynamic.

The formula for calculating the dynamic reactive current that is fed for the positive or negative phase sequence voltage is:

$$I_b = \Delta u * k * I_N$$

Fig. 98: Formula no. 2, depending on the nominal current IN of the inverter

For the positive and negative phase sequence voltage, *Δu* equates to the difference between the pre-fault voltage and the current voltage based on the reference voltage. The pre-fault voltage is calculated as a 1-min mean value.

$$\Delta u = \frac{U - U1min}{Uref}$$

Fig. 99: Formula no. 3

On account of the definition of a voltage jump in pre-norm EN50549-2 and in VDE-AR-N 4120 and VDE-AR-N 4110, it is typically the case that another voltage jump is detected when the incident is at an end, when the fault is rectified and when the voltage returns to a normal state. The result of this is that in an active operation mode a dynamic grid support using a fast feeding of residual current remains active even after the incident has passed and that reactive current is fed in according to the formulae (2) and (3). Dynamic grid support using fast feeding of residual current is then deactivated after a configured minimum support time, usually 5 s.

$$I_b = (\Delta u_1 - tb) * k * I_N$$

Fig. 100: Formula no. 4

10.3.3 Extract from FRT menu

Country-spec. Settings	Menu level	Display/ Setting	Action in this menu/meaning
	1 2 3 4	FRT (Fault Ride Through)	**NOTE: The device supports dynamic grid stabilization (Fault Ride-Through).**
		Operation mode – On | Off Setting | Manual |Pre-defined zero current	**Setting: Manual** All parameters can be configured independently. **Setting: Predefined zero current** Dynamic grid support active on account of immunity to interference and zero current feed-in. During a voltage incident, the current in the inverter is reduced to zero. All parameters are pre-configured, only the activation threshold for zero current has to be configured.
		Priority – Reactive current limitation | Active current priority	**Priority: Reactive current priority** Dynamic grid support active on account of immunity to interference and fast feeding of residual current. The inverter feeds additional reactive current according to the formulae (2) and (4). **Priority: Effective current priority** Dynamic grid support active on account of immunity to interference and fast feeding of residual current with dynamic reactive current. The inverter feeds in as much active power as available. If, as a result of this, the maximum continuous current is not achieved, the device supplies additional reactive current according to the formulae (2) and (4) up to the limit of continuous current.

EN

Country-spec. Settings	Menu level	Display/ Setting	Action in this menu/meaning
		Zero current under-voltage threshold Zero current over-voltage threshold 0 – 184 V / 253 – 340 V	If one or more phase/phase or phase/neutral conductor voltages move above the configured threshold, the inverter changes to zero current mode. The total current is regulated to virtually zero.
		Reference voltage U< - U>	Nominal value of the phase/neutral conductor voltage used as a reference voltage for formula (1) and (3). Adjustable in the range from level 1 undervoltage protection to level 1 overvoltage protection.
		Constant K negative sequence dip Constant k negative sequence swell k 0 – 10 2	Amplification factor for the negative sequence used in the calculation of the reactive current using formulae (2) and (4) Can be configured independently for drops and spikes.
		Constant k positive sequence dip & Constant k positive sequence swell k 0 – 10 2	Amplification factor for the negative sequence used in the calculation of the reactive current using formulae (2) and (4) Can be configured independently for drops and spikes.
		Dead band 0 - 100 [% Uref] 10.0	Dynamic grid support through fast feeding of residual current activated in the case of voltage events with a voltage change greater than the dead band.
		Dynamic reactive current only Off | On	**Standard**: The reactive current according to the formulae (2) and (4) is fed as **additional** reactive current. The means that sum of the pre-fault and additional reactive current is fed in. **Only dynamic:** The reactive current according to the formulae (2) and (4) is fed in as absolute reactive current. This means that regardless of the reactive current before the voltage event, only the reactive current is fed in according to the formulae (2) and (4) is fed in during the voltage event.
		Dead band mode Mode 1 | Mode 2	**Mode 1**: When calculating the reactive current, the value of the dead band is not subtracted from the amount of voltage change. As such, formula (2) applies to overvoltage and undervoltage incidents. **Mode 2:** When calculating the reactive current, the value of the dead band is subtracted from the amount of voltage change. For overvoltage and undervoltage events, formula (4) therefore applies: $I_b=(\Delta u_1-tb)*k*I_N$
		Minimum operating voltage 45 – 125.0 [% Unom] & Maximum operating voltage 45 – 125.0 [% Unom]	Dynamic grid support via fast feeding of residual current is activated on voltage events with at least one phase/phase or phase/neutral conductor voltage outside the configured normal operating voltage range. Dynamic grid support via fast feeding ore residual current is deactivated when the voltage returns to the normal operating voltage range.

EN

Country-spec. Settings	Menu level	Display/ Setting	Action in this menu/meaning
		Reactive current limitation ⚙ 0 – 100 % [% Imax]	The reactive power component of the fast feeding of residual current is limited to permit a defined proportion of active power components.
		Minimum support time ⚙ 1000 – 15000 ms	If due to a voltage jump in accordance with formula (1) and the configured dead band is activated, the dynamic grid support is deactivated via fast feeding of residual current after the minimum support time elapses.

10.4 Other grid-supporting functions that are effective in the case of active power

10.4.1 Permanent power limitation

The maximum active and apparent power to be installed for a generation plant is agreed between the grid operator and plant operator. The device capacity of a plant can be set to the exact agreed value using the S_{lim} and P_{lim} settings. To ensure that the load on the devices in the plant is uniform, we recommend distributing the performance reduction evenly across all devices.

Some grid connection rules insist that the agreed reactive power be supplied from every operating point of the plant without a reduction in the actual active power. Considering the fact that all KACO TL3 inverters have a semi-circular P-Q operating range, a reduction in the active power is, however, required during operation at maximum active power because an apparent power reserve is not available. By adjusting P_{lim}, the maximum active power can be restricted in order to establish an apparent power reserve and ensure that the agreed reactive power can be delivered from any active power operating point. [See figure 101: P-Q operating range with limited active power (Qmax=Smax≠Pmax) for PV inverters [▸ Page 91] Displays the appropriate P-Q operating range with a required example active power of 48% of the maximum apparent power of the plant or 43% of the maximum active power of the plant.

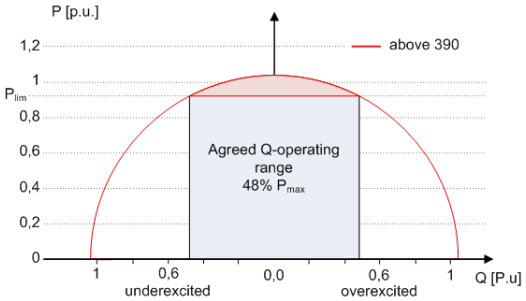

Fig. 101: P-Q operating range with limited active power (Qmax=Smax≠Pmax) for PV inverters

10.4.1.1 Parameter for permanet power limitation

Country-spec. Settings	Menu level	Display/ Setting	Action in this menu/meaning
		Power limitation Check activation	Activate or disable the power limitation.
		Maximum apparent power 1000 – S_{max} [VA]	The apparent power is limited globally to the configured value in VA. As soon as $S_{lim\ has\ been\ configured,}$ all of the active and reactive power control values will use S_{lim} as 100% instead of S_{max}.
		Maximum active power 1 – 100 [% S_{lim}]	Active power is limited globally to the configured value in % Slim or Smax.

EN

10.4.2 Soft start-up / Power rampup

A soft start-up function is available to prevent the grid from being negatively impacted by a sudden increase in feed-in power from the inverters.

When the inverter is activated or switched on, the increase in power is restricted by the set gradient. It is possible to configure whether the soft start-up should occur every time the device is switched on, only upon initial start-up each day or only upon start-up after the device has been switched off by grid protection. Due primarily to the fact that there is the risk that many plants could increase their power levels simultaneously after they have been switched off by grid protection, a soft start-up is usually only required for start-up after a device has been switched off by grid protection.

The soft start up is implemented by an absolute power limitation that increases with a continuous gradient up to the maximum power. The actual power of the inverter may vary freely below this limit due to a possible fluctuation in the available power or the target value, but at no time increases above the absolute power limit.

10.4.2.1 Parameter for power ramp

	Power ramp	**NOTE: The power ramp allows a moderate increase of the Performance possible**
	Gradient 1 – 600 [% / min]	Gradient of power limit. The maximum power limit increase to 100% of nominal power with the gradient specified.
	After every connect	Soft start ramp up is activated for every connection of the inverter to the grid
	After first connect	Soft start ramp up is activated for the first connection of the inverter to the grid on a particular day or after complete reboot of the inverter (AC and DC disconnected)
	After grid error	Soft start ramp up is activated for connection of the inverter to the grid after trip of the internal interface protection or via the external grid protection port (Powador-protect)

10.4.3 Normal operation power gradient

In the case of very large plants, it may also be necessary to restrict the change in power level during normal operation. If the set value (for increase and decrease in power level) and the solar irradiation change (for increase in power level), then the grid feed-in power is increased or decreased in line with the configured gradient. A limitation is not possible if the solar irradiation is reduced.

The function is not active for power changes defined by other grid support function such as power recovery after fault ride through, P(f), P(U).

10.4.3.1 Normal operation power gradient

Country-spec. Settings	Menu level	Display/ Setting	Action in this menu/meaning
		Operation mode On/Off	Activate or disable the power gradient limitation in normal operation.
		Increasing gradient 1-65534 [% S_{max} / min]	The change in the active power is limited to a configured power increase gradient
		Falling gradient 1 – 65534 [% S_{max} / min]	The change in the active power is limited to a configured power decrease gradient.

EN

10.5 Advanced islanding detection

Due to decentralized generation, there is the possibility that a deactivated part of the grid will remain live in an unintended island due to the balance of load and generation in this part of the grid. The detection of unintended island formation is an important function of decentralized generating units and is related to the prevention of damage to equipment as well as safety of personnel.

Depending on the structure and the operation of the distribution grid several dangers exist:

- In case of maintenance work in a distribution grid, personnel may be placed in danger if the deactivated part of the grid remains live as an island. This is especially the case if not all safety rules are followed.
- If fast auto-reclosure is used in a distribution grid and the deactivated part of the grid remains live as an island, reclosure will likely happen during phase displacement which might cause damage to rotating machinery on the grid.
- In the event of a fault in a medium voltage grid, the faulty part of the grid is disconnected. If the fault has a significant resistance, the deactivated part of a medium-voltage grid remains live as an island. Depending on the type of fault, but explicitly in case of a fault in the transformer, dangerous medium voltage might be accessible or even present in low-voltage appliances.

Especially for the last example very fast disconnection of the generating units to cause collapse of the forming island is necessary. At the same time any island formation detection method may cause false tripping. The industry is therefore in constant research to develop methods that are fast and reliable and at the same time reliably prevent false tripping.

Enhanced island detection method

The enhanced island detection of KACO new energy, employs a strategy to reliably detect island formation that is based on the characteristic differences between an interconnected grid and an islanded grid, thus ensuring reliable fast detection and prevention of false tripping.

An interconnected grid is dominated by rotating machinery, as a consequence frequency is proportional to active power balance and voltage is proportional to reactive power balance. In contrast an islanded grid behaves like a resonant circuit, as a consequence frequency is proportional to reactive power balance and voltage is proportional to active power balance. The active enhanced island detection method detects this difference by monitoring the behaviour of the grid. The enhanced island detection is monitoring the natural fluctuation of the grid frequency and injects a minimal reactive power proportional to the rate of change of frequency. In the moment of formation of an island the connected power systems is closing a positive feedback loop what allows the inverter to detect the changed situation and to disconnect. In case of formation of an island, the inverter disconnects within some 100 ms, well below 1000 ms.

- The number of parallel inverters does not affect the reliability of this function.
- This method also ensures that the impact on the distribution grid is kept to a minimum.
- In normal operation no effects on harmonic content, flicker and grid stability are detected.

This detection method is combined with a two stage passive rate of change of frequency (ROCOF) observation. If the ROCOF of the grid exceeds the configured disconnection threshold (stage 1) for the configured disconnection time, the device switches to zero current mode. If the ROCOF of the grid exceeds the configured shutdown threshold (stage 2) for the configured shutdown time, the device shuts down. In case of an island, this will shut down the island instantaneously. If the grid stabilizes, what might be the case if the ROCOF event was due to a short disturbance in the power grid, the inverter will resume normal operation. In the event of active stage 1, the device switches to zero current mode, and re-starts the infeed after a few 100ms. At stage 2, the device has shut down and the set reconnection conditions apply.

EN

11 Maintenance and troubleshooting

11.1 Visual inspection

Inspect the product and cables for visible external damage and note the operating status display, where applicable. In the event of damage, notify your installation engineer. Repairs may only be carried out by authorised electricians.

⚠ DANGER

Dangerous voltage due to two operating voltages

Severe injuries or death may occur if the cables and/or terminals/busbars in the device are touched. The discharge time of the capacitors is up to 5 minutes.

1. Only appropriately qualified electricians authorised by the mains supply network operator are permitted to open and maintain the device.
2. Before opening the device: Disconnect the AC and DC sides and wait at least 5 minutes.

NOTE

There are components in the housing of the device which may only be repaired by the customer service team.

Do not attempt to repair faults that are not described here (in the chapter on troubleshooting and fault rectification). Contact our customer service department. Only perform the maintenance work that is described here.

The device should be checked for proper operation by a qualified electrician at regular intervals and if you experience problems, you should always contact the system manufacturer service department.

11.2 Cleaning

11.2.1 Cleaning the housing

WARNING! Do not use compressed air or high-pressure cleaners!

1. Use a vacuum cleaner or a soft brush to remove dust from the fan cover and from the top of the device on a regular basis.
2. Remove dust from the ventilation inlets if necessary.

11.2.2 Cleaning the heat sink

⚠ WARNING

Risk of burns from hot surface.

Heat sinks become very hot when in operation.

1. Never touch the heat sinks after commissioning the device.
2. Allow the heat sinks at least 10 minutes to cool down before cleaning.

NOTE

Refer to our service and guarantee conditions on our homepage.

✓ The cleaning intervals must be adapted to match the ambient conditions of the installation location.

1. In sandy environments, we recommend cleaning the heat sinks and fans every quarter.

EN

- ↻ Cleaning the heat sink requires the fan to be removed.
- ↻ Switch off the device and secure it against restart.
- ↻ Keep a suitable brush ready for cleaning.

1. Remove the hood and fan Replacing the fan [See section 11.3 Page 95].
2. Clean the free space between the cover and the heat sink using suitable brushes.
3. Clean the heat sink with a suitable brush.

. **NOTE: Do not use any aggressive cleaning agents and ensure that no other components come into contact with fluids.**

⇨ Cleaning completed – if necessary, remount the fans.

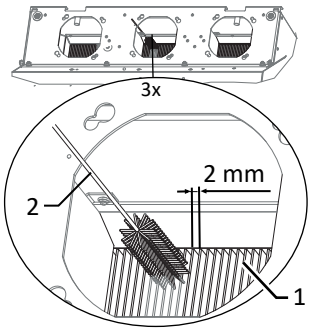

Fig. 102: Cleaning the cooling fins from above

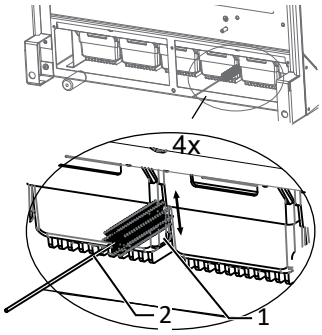

Fig. 103: Cleaning the cooling fins from below

1	Heat sinks / space between heat sinks
2	Brush (max. wire diameter 2mm)

11.3 Replacing the fan

Removing the cover

- ↻ A check has been performed to ensure there is no AC/DC voltage present.

1. Remove the fastening screws on the cover from both sides [🔧_T20]
2. Lift up the cover from both sides and press it out of the mounting clips.
3. Set the cover to one side.

⇨ Proceed with the cleaning or removal of the fans.

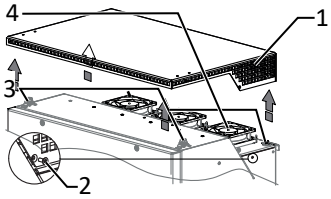

Fig. 104: Removing the cover

1	Cover
2	Fastening screw
3	Mounting clips
4	Fans

EN

Dismounting the fan

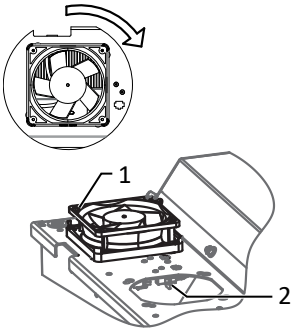

Fig. 105: Removing the fans

1 Fans
2 Connector

- ↻ It has been ensured that there is no AC/DC voltage present.
- ↻ **DANGER! Risk of injury from starting fans: If the device is not completely disconnected from the voltage source, the fan may start up unexpectedly and sever or injure limbs. This may also cause damage to the fan and impair the functionality of the device.**
- ↻ Cover hood for fans removed.

1. Wait until the 3 fans have stopped rotating.
2. Rotate the defective fan through approx. 10° in the clockwise direction and remove it carefully using the collar.
3. Release the interlock and remove the connector plug from the inside of the housing.
4. Remove the fan.
5. If necessary, clean the heat sink from above.

- ⇨ Install the replacement fan.

Fitting the cover

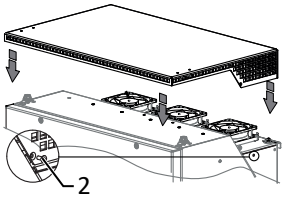

Fig. 106: Fitting the cover

2 Fastening screw

- ↻ The fan has been correctly installed and all impurities in the area of the cover have been removed.

1. Lift up the cover from both sides, place it on the mounting clips and carefully press it in.
2. Insert the fastening screws into the cover on both sides and tighten them [🔧_T20 / 📶 2.2 Nm].

- ⇨ You may now start up the device Commissioning [See section 8▸ Page 37].

11.4 Replacing overvoltage protection

Replace the DC overvoltage protection

☞ **NOTE: If a fault appears on the status display of the overvoltage protection mode, the overvoltage protection should be replaced.**

- ↻ **NOTE: A check has been performed to ensure there is no AC/DC voltage present.**

1. Opening the device Opening the device [See section 7.2▸ Page 24].
2. Unlock faulty modules via the locking latch.
3. Remove faulty modules individually from the DC base and replace with a module of the same type.

. **NOTE: The coding at the base plug-in position must match the coding on the module.**

4. Insert the DC overvoltage protection modules into the DC base one after another.
5. Secure new modules using the locking latch.
6. Ensure that all protective elements are properly secured.

- ⇨ Proceed with the installation of the device.

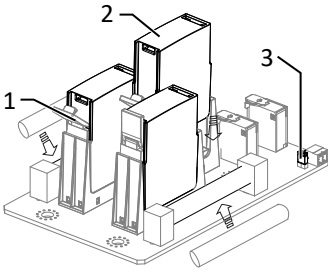

Fig. 107: Inserting overvoltage modules

1 DC base
2 DC overvoltage protection module (3 slots)
3 Jumper

EN

11.5 Shutting down for maintenance / troubleshooting

Shutdown sequence

1. Switch off the grid voltage by turning off the external circuit breakers.
2. Disconnect the DC side using the external DC isolator switch.

. **DANGER! The DC cables are still live**

⇨ After shutdown, wait 5 minutes before opening the device.

11.6 Disconnecting connections

11.6.1 AC connection

↻ It has been ensured that there is no AC/DC voltage present.

↻ Housing cover removed and set to one side.

1. Detach cables (L1/L2/L3) from the AC connection terminal [✕W_17].
2. Detach the PE line from the earthing bolt [✕W_17].
3. Loosen the cable fitting and pull the cables out through the cable fitting [✕W_46].

. **NOTE: If the AC cable does not fit through the cable fitting due to the size of the cable lug, then the AC cable must be severed at the cable lug.**

4. Place protective caps on the ends of the AC cables.

11.6.2 DC connection

↻ A check has been performed to ensure there is no DC voltage present.

↻ Housing cover removed and set to one side.

1. Detach the line ends from the PV generator at the DC+ and DC- busbar [✕W_17].
2. Place the fastening elements back in the fittings bag.
3. Loosen the cable fitting and pull the DC cable through the cable fitting [✕W_46].

. **NOTE: If the DC cable does not fit through the cable fitting due to the size of the cable lug, then the DC cable must be severed at the cable lug.**

4. Place protective caps on the ends of the DC cables.

11.7 Faults

11.7.1 Procedure

⚠ DANGER

Lethal voltages are still present in the connections and cables of the device even after the device has been switched off and disconnected!

Severe injuries or death may occur if the cables and/or terminals/busbars in the device are touched.

1. If a fault occurs, notify an appropriately authorized and qualified electrician or KACO new energy GmbH Service.
2. The operator can only carry out actions marked with a B.

11.7.2 Rectifying a fault

B = Action of the operator; E = The indicated work may only be carried out by an authorized electrician! ; K = The indicated work may only be carried out by a service employee of KACO new energy GmbH!

EN

Fault	Possible cause	Explanation/remedy	By
The LEDs do not light up	Grid voltage not available	› Check whether the DC and AC voltages are within the permitted limits (see Technical Data)	E
		› Notify KACO Service.	E
The device stops feeding into the grid shortly after being switched on, even though there is sunlight present.	Defective circuit-breakers in the device	If the circuit-breakers are defective, the device will recognize this during the self-test.	K
		› Ensure that there is sufficient PV generator power.	E
		› If the grid separation relay is defective, have it replaced by KACO Service.	
		› Notify KACO Service.	
Device is active but not connected to the grid. A grid fault is displayed on the status LED.	Grid-feed is interrupted due to a grid fault.	Due to a grid fault (over/undervoltage, over/underfrequency), the device stopped the feed-in process and disconnected from the grid for safety reasons.	
		› Change the grid parameters within the permitted operating limits (see the "Start-Up" section).	E
The grid fuse trips.	The grid fuse capacity is too low.	In case of a high level of solar radiation, the inverter exceeds its rated current for a short period, depending on the PV generator.	
		Select the capacity of the device's backup fuse to be somewhat higher than the maximum feed-in current (see the "Installation" section).	E
		› Contact the grid operator if the grid failure continues to occur.	E
The grid fuse trips.	Hardware damage on the device.	If the grid fuse trips immediately when the device goes into feed-in mode (after the start-up period is complete), the device's hardware is probably damaged.	
		› Contact KACO Service to test the hardware.	E
The device is displaying an impossible daily peak value.	Faults in the grid.	The device continues to operate as normal without losses to the yield, even when an erroneous daily peak value is displayed. The value is reset overnight.	
		To reset the value immediately, switch the device off by disconnecting it from the grid and switching off the DC, then switch it back on.	E
Daily yields do not correspond to the yields on the feed-in meter.	Tolerances of the measuring elements in the device.	The measuring elements of the device have been selected to ensure maximum yields. Due to these tolerances, the daily yields shown may deviate from the values on the feed-in meter by up to 15%.	E
		› No action.	
Device is active but not connected to the grid.	Generator voltage too low; grid voltage or PV generator voltage unstable.	The PV generator voltage or power is not sufficient for feed-in (solar radiation is too low). The inverter checks the grid parameters before the feed-in process begins. The length of time it takes to switch back on again differs from country to country, depending on applicable standards and regulations, and may be several minutes. The starting voltage may have been set incorrectly.	
		› Adjust starting voltage in the Parameter menu.	E
		› No action	

EN

Fault	Possible cause	Explanation/remedy	By
In spite of high radiation levels, the inverter does not feed the maximum power into the grid.	Particular ambient conditions.	Because the temperatures inside the device are too high, the device reduces its power to prevent damage to the device. Note the technical data. Ensure that the convection cooling is not impeded from the exterior. Do not cover the cooling fins.	
		› Ensure sufficient cooling of the device.	B
		› Remove any foreign bodies which are present on the device.	B
		› Clean the cooling fins	E
	DC fuse faulty	A generator string is disconnected from the device owing to a faulty fuse. Check why it has tripped by measuring all DC strings using a clip-on ammeter. - If there is no current flow in a string, the associated DC fuse is faulty.	
		› Check the no-load voltage and dimensioning of the PV generator. Replace any damaged modules.	B, E
		› Replace the PV fuse with a fuse of the same size and type.	

Tab. 10: Troubleshooting

11.8 Fault messages

Fault LED (red)	Status	Explanation	LED
	FS (fault status)	– Fault signal relay has been tripped.	To:
		– Feed-in was ended due to a fault.	
	OS (operating status)	– The fault relay releases again.	Off
		– The device feeds back into the grid again after a country-specific time period.	

11.9 Troubleshooting

The following table lists the possible status and fault messages, the ProLog© status messages that the device can display by means of the LC display / web interface and the LEDs.

EN

No.	Grid LED	LED	Display on web interface	Status description	Action	Pers.
2			Insufficient generator voltage / insufficient battery voltage!	Generatorspannung und -leistung ist zu gering, Zustand vor Übergang vom oder zum Standby.	The DC voltage is too low or the voltage is interrupted under load (DC output too low) a) Is the web interface showing the correct voltage measured on the terminals? (Note measured values) b) XL version: Check whether the DC isolator switch is switched off. c) Check whether DC polarity reversal is present. d) Check whether the device software has been installed in full via the list of versions in the menu.	B
4			Feed in at max. MPP	Search for the cause in the plant if insufficient power is being fed in despite this message being issued. If irradiation is sufficient, MPP controls are used for feed-in to gain maximum yield.	Check whether: - Strings with different voltage levels are present on the same tracker. - XL version: a DC isolator switch is switched off. - DC polarity reversal is present - frequent power limitation due to inadequate dimensioning - check open circuit voltage with multimeter - if constant voltage mode is active: check whether open circuit voltage is lower than the set constant voltage	E
8			Self-test in progress	Self-test of the relays, check the line relay prior to beginning grid feed. Should only be regarded as an error if one of the self-test routines gets stuck.	If the device remains in this status continuously despite adequate DC voltage, this indicates a device fault.	-
9			Test mode	Test mode is for internal operations only!	-	-

EN

No.	Grid LED	LED	Display on web interface	Status description	Action	Pers.
10			Temperature in device too high	Possible causes: ambient temperature too high, fan covered, device fault.	Cool off the area around the inverter. Uncover the fans. Notify your authorized electrician!	B B E
11			Power limitation	The heat sink temperature or control board temperature is too high. This is a safety function to prevent possible damage due to high temperatures.	Query the temperature via the web interface. Are air outlets covered? Is there sufficient space at the ventilation openings of the device? See Chapter 6, Assembly and preparation. If necessary, see that the room is cooled.	-
17			HMI1: "Powador-protect disconnection" HMI2: "External grid protection shutdown"	Measured value for the grid parameters outside the set limit values. Shutdown was triggered by grid plant protection.	Has the grid plant protection been supplied with power correctly? Check the grid parameters on the grid plant protection. Is the cabling implemented correctly? If external grid plant protection is not required, please check the menu to see if the grid plant protection has been switched off.	E
18			Resid. current shutdown (AFI)	The integrated AC/DC-sensitive residual current device registered an non-permissibly high leakage current going to PE. Triggered when there is an increase in the residual current of 30 mA, 60 mA & 150 mA with associated disconnection times in each case. The reactivation time is I	Check PE cabling; the cause is generally faulty cabling to earth. Often occurs during rainfall in the case of faulty cabling. Measure the insulation resistance of the system.	E
20			Power rampup active	Internal ramp limiting, e.g.: "Ramp Up" 10 %/ Min • After an overvoltage has been detected, for example, the device limits its output and slowly ramps up again (RampUp).	The "Feed-in" LED flashes for the duration of the device start-up.	-
31			AFI module fault	A fault has occurred in the all-current sensitive residual current circuit breaker.	-	-
33			DC feed-in error	The DC feed-in has exceeded the permitted value. This DC feed-in can be caused in the device by grid conditions and may not necessarily indicate a fault.	Notify your authorized electrician if the fault occurs repeatedly.	E

EN

No.	Grid LED	LED	Display on web interface	Status description	Action	Pers.
34			Internal communication error	A communication error has occurred in the internal data transmission.	Notify your authorized electrician! Check the data cable.	E
35			Protect. shutdown SW	Due to a measured value which is outside the permissible range, a shutdown has been carried out to protect the device Possible causes for shutdown: - Mains overvoltage (each phase is monitored) - DC link overvoltage - DC link	Does the error only occur sporadically? How is the device connected to the grid (strongly inductive network (directly on the transformer))? -> If the plant has its own transformer, then the short-circuit voltage of the transformer provides information about the inductance of the grid established for the system. (4% short-circuit voltage is a very good value.)	K
36			Protection shutdown HW	Protective shutdown if critical limit values are exceeded. Group fault for all trip zone shutdowns. The specific shutdown reason usually comes first, followed by this group fault. Causes: Saturation monitoring of the AC-IGBTs or AC overcurrent	No fault! Grid-related shutdown, the grid connects again automatically.	-
38			Generator voltage too high / fault: Battery overvoltage	The voltage of the DC generator is too high. The PV generator is configured incorrectly.	Check PV voltage using suitable measuring equipment. Are strings connected in series instead of in parallel?	E
41			Grid failure undervoltage L1	The voltage of a grid phase is too low; the grid cannot be fed into. The phase experiencing failure is displayed.	Check grid voltage at the device terminal Lx. Check setting values in the parameters menu. Has everything been set up correctly and is the voltage within the set limit values? Check connection/ cabling!	E
42			Grid failure overvoltage L1	See description in the event of a fault 41	See action in the event of a fault 41	E
43			Grid failure undervoltage L2	See description in the event of a fault 41	See action in the event of a fault 41	E
44			Grid failure overvoltage L2	The voltage of a grid phase is too low; the grid cannot be fed into. The phase experiencing failure is displayed.	Notify your authorized electrician!	E

EN

No.	Grid LED	LED	Display on web interface	Status description	Action	Pers.
45			Grid failure undervoltage L3	See description in the event of a fault 41	See action in the event of a fault 41	E
46			Grid failure overvoltage L3	See description in the event of a fault 41	See action in the event of a fault 41	E
47			Grid failure phase-to-phase voltage	Error message indicates that the phase/phase voltages are outside the permissible limits. (Limit values are country-specific.) A significant increase in voltage in the plant can be brought about by an overly small cable cross-section.	Measure the voltages on the device terminal and compare to the relevant country-specific limit. Check setting values in the parameters menu. Check the AC fuses: A phase may be missing. Check connection/ cabling!	B/K
48			Grid failure underfrequency	Measured value for grid frequency is outside the permissible limit. Limit is country-dependent. Grid frequency below the minimum permissible grid frequency set	Question: Which country is set? Are all 3 AC voltages present? Check setting values in the parameters menu. Check connection/ cabling!	E
49			Grid failure overfrequency	Measured value for grid frequency is below the permitted limit. This limit is country-specific.	See action in the event of a fault 48	E

EN

No.	Grid LED	LED	Display on web interface	Status description	Action	Pers.
50			Grid failure average voltage	The grid voltage measurement according to EN 50160 has exceeded the maximum permitted limit value. This fault may be grid-related.	This is a requirement of the relevant norm. Check setting values in the parameters menu. Software version query ARM application? CFG? DSP-AC? DSP-DC? If there is an error in one of the 4 software specifications, this indicates that the software has not been correctly unzipped. Due to feed-in, the AC voltage on the inverter terminals is raised. The voltage measured by the inverter is dependent on the amount of grid voltage and the cross-section of the cabling.	E
57			Waiting for reconnect	Waiting time of the device following an error.	The devices switches on after a country-specific waiting period.	-
58			Control board overtemp.	The temperature inside the device was too high. The device shuts down to avoid hardware damage.	How high is the device output? Fan on? Heat sink covered? The ambient temperature may be too high. (Use active cooling)	E
59			Self test error	A fault occurred during a self-test.	Notify your authorised electrician!	E
60			Excessive generator voltage / excessive battery voltage	The inverter does not begin feeding into the grid until the PV voltage falls below a specified value.	Check PV voltage using suitable measuring equipment. Are strings connected in series instead of in parallel? Does the status message also appear at higher external temperatures?	-
61			External limit	The grid operator requires a power reduction. This is not a fault message, it is a status message.	This is a requirement from the grid operator.	-

EN

No.	Grid LED	LED	Display on web interface	Status description	Action	Pers.
62			Standalone mode	-	-	-
63			Frequency-dependent power reduction	The feed-in power is reduced linearly over a certain frequency value. This requirement is country-dependent.	This is a requirement from the grid operator.	-
64			Output current limitation	Power limitation as the max. permissible value of the feed-in current per phase has been reached. This is a protective function of the device. The AC current is limited once the specified maximum value has been reached.	This is a normal protective function of the device.	-
67			Fehler Leistungsteil 1	Es liegt ein Fehler im Leistungsteil vor.	Es liegt ein Fehler im Leistungsteil vor.	E
70			Fault in fan 1	Failure in the interior fan or the corresponding tacho signal. The power is reduced to 50% Pnom. All 3 LEDs light up on the device.	Is the fan blocked? For electrically trained and qualified personnel: Are the plugs correctly plugged in?	E
71			Fault in fan 2	Failure in the 1st external fan or the corresponding tacho signal. The power is not reduced. This occurs via the temperature deregulation. All 3 LEDs light up on the device.	See action in the event of a fault 70	E
72			Fault in fan 3	Failure in the 2nd external fan or the corresponding tacho signal. The power is not reduced. This occurs via the temperature deregulation. All 3 LEDs light up on the device.	See action in the event of a fault 70	E
73			Standalone grid error	Shutdown since an AC grid is no longer available. Standalone grid detection is only active in certain country settings.	Is the grid still present with all three phases (fuses tripped)?	B
75			Self test in progress	No fault message, only a status.	-	-
78			Resid. current shutdown (AFI)	A static residual current causes the device to shut down. The shutdown threshold is determined by the power class and the relevant regulations.	If the fault tends to occur in the event of precipitation or high levels of humidity, this indicates the presence of an insulation fault on the DC side of the plant -> check the DC cabling in the plant!	E
79			Insulation measurement	The insulation resistance of the plant is calculated prior to activation.	Normal device response Device is not permitted to be permanently in this status, however. If it does -> fault in the device.	B

EN

No.	Grid LED	LED	Display on web interface	Status description	Action	Pers.
80			Insulation meas. not possible	The insulation measurement cannot be performed because the generator voltage is too volatile.	If a fault message appears continuously, arrange for a service to take place. (Semiconductor defective) Check PV module installation.	E
81			Protection shutdown grid voltage L1	Overvoltage has been detected on a conductor. An internal protective mechanism has disconnected the device to protect it against damage.	In case of repeated occurrence: Notify your authorized electrician!	E
82			Protection shutdown grid voltage L2	Overvoltage has been detected on a conductor. An internal protective mechanism has disconnected the device to protect it against damage.	In case of repeated occurrence: Notify your authorized electrician!	E
83			Protection shutdown grid voltage L3	Overvoltage has been detected on a conductor. An internal protective mechanism has disconnected the device to protect it against damage.	In case of repeated occurrence: Notify your authorized electrician!	E
84			Protection shutdown DC link undervoltage	A voltage deviation has been found in the DC link. An internal protective mechanism has disconnected the device to protect it against damage.	In case of repeated occurrence: Notify your authorized electrician!	E
85			Protection shutdown DC link overvoltage	A voltage deviation has been found in the DC link. An internal protective mechanism has disconnected the device to protect it against damage.	In case of repeated occurrence: Notify your authorized electrician!	E
86			Protect. shutdown unbal. DC link	Overvoltage has been found in the DC link. An internal protective mechanism has disconnected the device to protect it against damage.	In case of repeated occurrence: Notify your authorized electrician!	E
87			Protection shutdown overcurrent L1	A current that has been found on a conductor is too high. An internal protective mechanism has disconnected the device to protect it against damage.	In case of repeated occurrence: Notify your authorized electrician!	E
88			Protection shutdown overcurrent L2	See description in the event of a fault 87	See action in the event of a fault 87	E
89			Protection shutdown overcurrent L3	See description in the event of a fault 87	See action in the event of a fault 87	E
91			Protective shutdown drop 2.5 V	-	-	-
97			Protection shutdown overcurrent HW	Too much power has been fed into the grid. Complete disconnection of the device.	Notify authorized electrician / KACO Service!	E/K
100			Protection shutdown HW overtemperature	The device has been switched off because the temperatures in the housing were too high.	Switch off AC+DC -> Wait 5 minutes -> Switch on AC+DC -> if this is not successful, contact the service department	B E

EN

No.	Grid LED	LED	Display on web interface	Status description	Action	Pers.
101			Temperature plausibility error	The individual temperatures in the device are compared with one another. This fault occurs if a certain limit value is exceeded.	Notify KACO Service!	K
102			Plausibility fault efficiency	The degree of efficiency of the device must remain within certain limits.	Notify KACO Service!	K
105			Relay plausibility error	Check the voltage measurement upstream of and between the relays - the difference can be a maximum of 24 V	Switch off the device entirely (switch off AC + DC for min. 5 minutes), if the fault occurs again, there is a device fault	K
107			Check surge protection device	Surge protection device (if present in the device) has tripped and must be replaced. AC, DC & interfaces are monitored for triggered surge protection. All 3 LEDs light up on the device.	Check surge protection in the device. The surge protection module has a corresponding function display. With a red function display, the surge protection module must be checked, and replaced if necessary. The device feeds back into the grid.	K
108			Grid failure overvoltage L1	Shutdown because the grid voltage on phase Lx is outside the set limit value (2nd level up to 5th level of grid monitoring). The limit value is specified by the respective country-specific standard.	Check grid voltage at the device terminal Lx. Check setting values in the parameters menu. Has everything been set up correctly and is the voltage within the set limit values? Check connection/ cabling!	E
109			Grid failure overvoltage L2	See description in the event of a fault 108	See action in the event of a fault 108	-
110			Grid failure overvoltage L3	See description in the event of a fault 108	See action in the event of a fault 108	-
111			Grid failure undervoltage L1	See description in the event of a fault 108	See action in the event of a fault 108	-
112			Grid failure undervoltage L2	See description in the event of a fault 108	See action in the event of a fault 108	-
113			Grid failure undervoltage L3	See description in the event of a fault 108	See action in the event of a fault 108	-
118			DC overvoltage 1	PV voltage above permissible limit values.	Re-wire PV modules. Contact your authorised electrician.	E

EN

No.	Grid LED	LED	Display on web interface	Status description	Action	Pers.
119			DC overvoltage 2	PV voltage above permissible limit values.	Re-wire PV modules. Contact your authorised electrician.	E
125			Relay control fault	The enable signal for the relay control is read back. Shutdown occurs if the level is incorrect.	Notify KACO Service!	K
128			Internal memory error 1	Write or read access to the internal RAM of the DSP was erroneous. The device only feeds into the grid again the next day or following a reset.	Disconnect device on the DC side and wait 1 minute, then switch on again.	B
129			Voltage-dependent power reduction	Yes, if the function P(U) sets the power level according to the specified parameters subject to the AC voltage.	This functionality may, for example, be requested by the grid operator. If there is no request, the function can be deactivated.	B
148			External memory error 1	The device has permanent internal memory for the purpose of, for example, storing the hardware used. Operation parameters are deduced from this.	Disconnect AC and DC, wait 1 minute and switch on again.	B
150			Protective shutdown drop reference ADC	Internal protective function in order to adhere to the required measurement accuracy.	Disconnect AC and DC, wait 1 minute and switch on again.	B
158			Power limitation	Power limitation because the internal temperature is too high. The temperature is measured on the control card. This is a protective function of the device.	-	-
159			Waiting for fault acknowledgement	The DSP is waiting for the configuration data from the HMI.	Configuration of the device must be concluded in full.	B
160			Error: Grid relay L1	During the self-test, it is discovered that the grid-side Lx relay becomes stuck. The self-test does not check whether the relay switches on. Grid-side Lx relay defective.	Device error detected	-
161			Error: Grid relay L2	See description in the event of a fault 160	See action in the event of a fault 160	-
162			Error: Grid relay L3	See description in the event of a fault 160	See action in the event of a fault 160	-
164			Error: Filter relay L1	See description in the event of a fault 160	See action in the event of a fault 160	-
165			Error: Filter relay L2	See description in the event of a fault 160	See action in the event of a fault 160	-
166			Error: Filter relay L3	See description in the event of a fault 160	See action in the event of a fault 160	-
169			Error: AFI sensor	The AFI sensor is demagnetised prior to feed-in. If this is not possible, this error message appears.	Device error detected	-
180			Pre-synchronisation not possible	Adequate voltage pre-synchronisation with the AC grid not possible.	Disconnect AC and DC, wait 1 minute and switch on again.	B

EN

No.	Grid LED	LED	Display on web interface	Status description	Action	Pers.
181			Insulation error, centre	Insulation error close to the centre of the PV string (area covering +-15% of the half of the string)	As such, symmetrical fault resistances are also detected. These must be rectified in order to operate the system safely and reliably.	E
182			Insulation error, minus	See description in the event of a fault 181	See action in the event of a fault 181	-
183			Insulation error, plus	See description in the event of a fault 181	See action in the event of a fault 181	-
184			Protective shutdown overcurrent L1 int.	See description in the event of a fault 181	See action in the event of a fault 181	-
185			Protective shutdown overcurrent L2 int.	See description in the event of a fault 181	See action in the event of a fault 181	-
186			Protective shutdown overcurrent L3 int.	See description in the event of a fault 181	See action in the event of a fault 181	-
187			Fault in fan 4	Failure in the 3rd external fan or the corresponding tacho signal. The power is not reduced. This occurs via the temperature deregulation. All 3 LEDs light up on the device.	Is the fan blocked? For electrically trained and qualified personnel: Are the plugs correctly plugged in?	E
188			Semiconductor test not possible	Filter voltage measurement or actuation of the semiconductors faulty.	Disconnect AC and DC, wait 1 minute and switch on again.	B
189			Semiconductor module 1 in channel A defective	Semiconductor module x from channel A is defective or the corresponding filter relay is not closing correctly.	Disconnect AC and DC, wait 1 minute and switch on again.	B
190			Semiconductor module 2 in channel A defective	See description in the event of a fault 189	See action in the event of a fault 189	-
191			Semiconductor module 3 in channel A defective	See description in the event of a fault 189	See action in the event of a fault 189	-
192			Semiconductor module 1 in channel B defective	See description in the event of a fault 189	See action in the event of a fault 189	-
193			Semiconductor module 2 in channel B defective	See description in the event of a fault 189	See action in the event of a fault 189	-
194			Semiconductor module 3 in channel B defective	See description in the event of a fault 189	See action in the event of a fault 189	-
195			DESAT error	Saturation monitoring (DESAT) of the IGBTs has tripped or the voltage supply (24 V) of the gate drivers is too low.	-	-

EN

No.	Grid LED	LED	Display on web interface	Status description	Action	Pers.
203			Protection shutdown grid voltage (effective value) L1	Protective shutdown due to an excessively high grid voltage on Lx. It is the effective value which is decisive for the shutdown procedure.	Check the AC-side wiring (e.g. increased voltage due to inductance capacity of a transformer) If the error display occurs frequently, or every time, the installation must be checked. If there is nothing wrong with the installation, then there is a fault in the device. Check connection/ cabling!	E
204			Protection shutdown grid voltage (effective value) L2	See description in the event of a fault 203	See action in the event of a fault 203	-
205			Protection shutdown grid voltage (effective value) L3	See description in the event of a fault 203	See action in the event of a fault 203	-
206			Protection shutdown overcurrent HW	Overcurrent shutdown triggered by hardware.	-	-
207			Detection of hardware detection failed: Control card	The data saved on the control card is erroneous.	Disconnect AC and DC, wait 1 minute and switch on again.	B
208			Detection of hardware detection failed: AC power board	The data saved on the AC power board is erroneous.	Disconnect AC and DC, wait 1 minute and switch on again.	B
209			Detection of hardware detection failed: AC relay board	The data saved on the AC relay board is erroneous.	Disconnect AC and DC, wait 1 minute and switch on again.	B
216			Protect. shutdown HW - overvoltage DC link halves	One of the two DC link halves has exceeded the maximum value. Shutdown occurs by way of HW-detection and TripZone shutdown.	Disconnect the AC and DC supply. Wait 1 minute and switch back on.	B
217			Protect. shutdown HW - 24V supply voltage	The supply voltage in the device has exceeded its max. permitted value. Shutdown occurs by way of HW-detection and TripZone shutdown.	Disconnect the AC and DC supply. Wait 1 minute and switch back on.	B
224			External limitation	This is a relative specification of the desired active power adjustment.	-	-
226			The inverter is disconnected from the grid manually	The inverter can be disconnected from the grid manually after logging in via the WebGui or the button on the housing. This message then appears.	Switch on the grid by pressing the function button for a long time (> 5 sec) [Chapter 9.6.1] or activate the grid connection using the web interface symbol.	B

EN

No.	Grid LED	LED	Display on web interface	Status description	Action	Pers.
227			Protective shutdown current asymmetry	Schutzabschaltung, die bei (hochohmigen) Netzausfällen für eine sichere Abschaltung des Gerätes sorgt.	-	-

NOTE

Fault number not found?

If fault numbers are displayed on the device but are not listed here, then it is usually necessary to have this looked at by your installation partner.

11.9.1 Irregular errors

NOTE

In the event of an irregularly occurring error, our service employee requires the service package stored on the device. You have to download and send this under the Service menu item - Export Service Package.Configuration via web user interface [See section 9.4.2 Page 52]

EN

12 Decommissioning and dismantling

12.1 Switching off the device

⚠ DANGER

Lethal voltages are still present in the connections and cables of the device even after the device has been switched off and disconnected!

Severe injuries or death may occur if the cables and/or terminals/busbars in the device are touched.

1. The device must be mounted in a fixed position before being connected electrically.
2. Comply with all safety regulations and current technical connection specifications of the responsible power supply company.
3. The device is only permitted to be opened or serviced by a qualified electrician.
4. Switch off the grid voltage by turning off the external circuit breakers.
5. Check that all AC and DC cables are completely free of current using a clip-on ammeter.
6. Do not touch the cables and/or terminals/busbars when switching the device on and off.
7. Keep the device closed when in operation.

⚠ WARNING

Risk of burns caused by hot housing components

Housing components can become hot during operation.

1. During operation, only touch the housing cover on the device.

12.2 Uninstalling the device

⚠ DANGER

Dangerous voltage due to two operating voltages

Severe injuries or death may occur if the cables and/or terminals/busbars in the device are touched. The discharge time of the capacitors is up to 5 minutes.

1. Only appropriately qualified electricians authorised by the mains supply network operator are permitted to open and maintain the device.
2. Before opening the device: Disconnect the AC and DC sides and wait at least 5 minutes.

↻ Device shut down and no voltage is present.

↻ AC cable disconnected AC connection [See section 11.6.1 Page 97].

↻ DC connection disconnected DC connection [See section 11.6.2 Page 97].

1. Unfasten the cable bolts for ethernet cables [🔧W_29].
2. Unfasten the cable bolts for RS485 cables [🔧W_20].
3. Disconnect the plug from the communication circuit board.
4. Remove the interface cables from the device.
5. Insert the sealing plug in all open cable fittings.

⇨ The device is uninstalled. Proceed with disassembly.

12.3 Disassembling the device

↻ Unit has been switched off and uninstalled.

1. Remove the screw that prevents the device from being lifted off the mount.

EN

2. Use the lateral openings and lift the device off the mount.

⇨ Device removed. Proceed with the packaging process.

12.4 Packaging the device

↻ Device has been uninstalled.

1. If possible, always pack the device in the original packaging. If this is no longer available, an alternative is to use equivalent packaging.
2. You must be able to close the box completely and it must be able to accommodate the weight and size of the device.

12.5 Storing the device

⚠ CAUTION

Property damage as a result of condensation

Faulty storage can form condensate in the device and impair the device functioning (e.g. storage outside the ambient conditions or temporary relocation from a cold to a hot environment).

✓ Store in accordance with the technical data > Environmental data [See section 4.3 Page 16]

1. Prior to installation, check the inner area for condensation and if necessary, allow it to dry sufficiently before installation.

↻ Device packaged.

☞ Store the device at a dry location, in accordance with the ambient temperature range Environmental data [See section 4.3 Page 16].

EN

13 Disposal

⚠ CAUTION

Risk to the environment if disposal is not carried out in the correct manner

For the most part, both the device and the corresponding transport packaging are made from recyclable raw materials.

Unit: Do not dispose of faulty devices or accessories together with household waste. Ensure that the old devices and any accessories are disposed of in a proper manner.

Packaging: Ensure that the transport packaging is disposed of properly.

EN

14 Service and warranty

If you need help solving a technical problem with one of our KACO products, please contact our service hotline.

Please have the following information ready so that we can help you quickly and efficiently:

- Device name / serial number
- Date of installation / Start-up report
- Fault message indicated by status LEDs / Description of the fault / Did you notice anything unusual? / What has already been done to analyze the fault?
- Module type and string circuit
- Consignment identification / Delivery address / Contact person (with telephone number)
- Information about the accessibility of the installation site.

You can find the following items and other information at our web site Kaco-newenergy:

- our current warranty conditions,
- a complaint form,
- a form for registering your device. Please register your device without delay. In this manner, you can assist us in providing you with the quickest service possible.

NOTE

The maximum length of the warranty is based on the currently applicable national warranty conditions.

The text and figures reflect the current technical state at the time of printing. Subject to technical changes. No liability for printing errors.

Carl-Zeiss-Strasse 1 · 74172 Neckarsulm · Germany · Tel. +49 7132 3818-0 · Fax. +49 7132 3818-703 · info@kaco-newenergy.de · www.kaco-newenergy.de

The text and figures reflect the current technical state at the time of printing. Subject to technical changes. No liability for printing errors.

Carl-Zeiss-Strasse 1 · 74172 Neckarsulm · Germany · Tel. +49 7132 3818-0 · Fax. +49 7132 3818-703 · info@kaco-newenergy.de · www.kaco-newenergy.de