ENVISION™

Geothermal/Water Source Indoor Split Heat Pump
2 to 6 Tons Single Speed
2 to 6 Tons Dual Capacity

NSZ/NDZ Indoor Split Installation Manual

Installation Information

Water Piping Connections

Hot Water Generation Connections

Electrical

Startup Procedures

Troubleshooting

Preventive Maintenance

AHRI CERTIFIED™ www.ahridirectory.org Water Source HP ANSI/AHRI/ASHRAE/ISO13256-1

ETL LISTED

ENERGY STAR

WaterFurnace® Smarter from the Ground Up™

IM1003SN 08/10

Table of Contents

Model Nomenclature 4
Physical Characteristics 4
Physical Dimensions 5
General Installation Information 6-9
Physical Data - Envision Air Handler 9
Open Loop - Well Water Systems 10-11
Water Quality 11
Closed Loop - Ground Source Systems 12
Hot Water Generator Connections 13-14
Electrical Data 15
Thermostat Wiring 15
Wiring Schematics 16-17
Microprocessor Control 18-21
Operation Logic Data 22
DIP Switch Settings 22
Refrigeration 23-25
Line Set Sizes 25
Pressure/Temperature Conversion Chart for R-410A 26
Thermistor Resistance 27
Operating Parameters 27-28
Pressure Drop and Recommended Flow Rates 29
Unit Startup and Troubleshooting 30-32
Preventative Maintenance 33
Replacement Procedures 33
Service Parts List 34

Model Nomenclature

1	2	3	4-6	7	8	9	10	11
N	D	Z	049	A	1	1	A	C

Model Type
N = Envision

Compressor Type
D = Dual Capacity
S = Single Speed

Cabinet Configuration
Z = Indoor Split

Unit Capacity

Vintage
A = Current

Voltage
1 = 208-230/60/1

Coax Options
C = Copper
N = Cupronickel

Future Option
A = Standard

Hot Water Option
0 = No Hot Water Generator, No IntelliStart
1 = Hot Water Generator with factory installed pump, No IntelliStart
3 = No Hot Water Generator, IntelliStart
4 = Hot Water Generator with factory installed pump, IntelliStart

Physical Characteristics

Model	022	030	036	042	048	060	070	026	038	049	064	72
Compressor (1 each)	Single Speed Scroll							Dual Capacity Scroll				
Factory Charge R410a, oz [kg]	56 [1.59]	56 [1.59]	56 [1.59]	74 [2.1]	90 [2.55]	92 [2.61]	108 [3.06]	52 [1.47]	56 [1.59]	90 [2.55]	92 [2.61]	104 [2.95]
Coax and Water Piping												
Water Connections Size - Swivel- in [mm]	1 [25.4]							1 [25.4]				
HWG Connection Size - Swivel - in [mm]	1 [25.4]							1 [25.4]				
Brass Service Valve - Liquid Line - in [mm]	3/8 [9.525]					1/2 [12.7]		3/8 [9.525]			1/2 [12.7]	
Brass Service Valve - Suction Line - in [mm]	5/8 [15.875]			3/4 [19.05]		7/8 [22.225]		5/8 [15.875]	3/4 [19.05]		7/8 [22.225]	
Coax and Piping Water Volume - gal [l]	0.7 [2.6]	1.0 [3.8]	1.3 [4.9]	1.3 [4.9]	1.6 [6.1]	1.6 [6.1]	2.3 [8.7]	0.7 [2.6]	1.3 [4.9]	1.6 [6.1]	1.6 [6.1]	2.3 [8.7]
Weight - Operating, lb [kg]	164 [74]	174 [79]	212 [96]	213 [97]	246 [112]	251 [114]	292 [132]	189 [186]	236 [107]	250 [113]	271 [123]	290 [132]
Weight - Packaged, lb [kg]	184 [83]	194 [88]	232 [105]	233 [106]	266 [121]	271 [123]	312 [142]	209 [95]	256 [116]	270 [122]	291 [132]	310 [141]

NOTES: All units have TXV expansion devices, and 1/2 in. [12.2 mm] and 3/4 in. [19.1 mm] electrical knockouts.
Brass service valves are sweat type valves.

10/29/08

Physical Dimensions

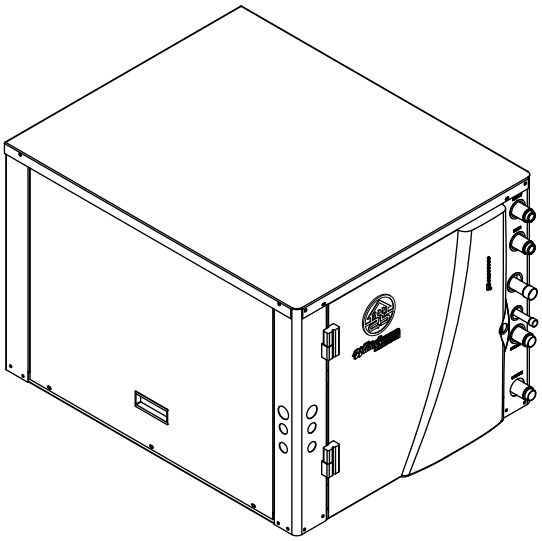

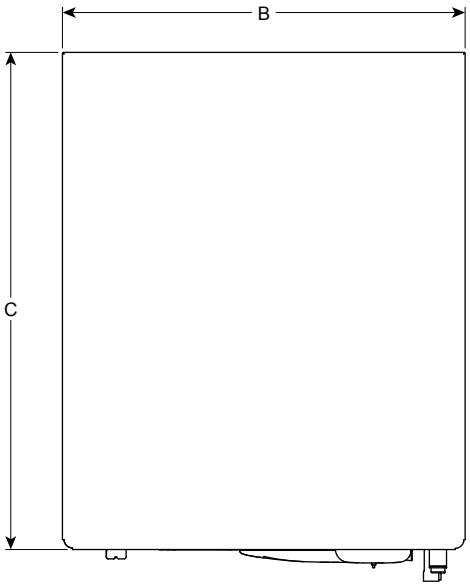

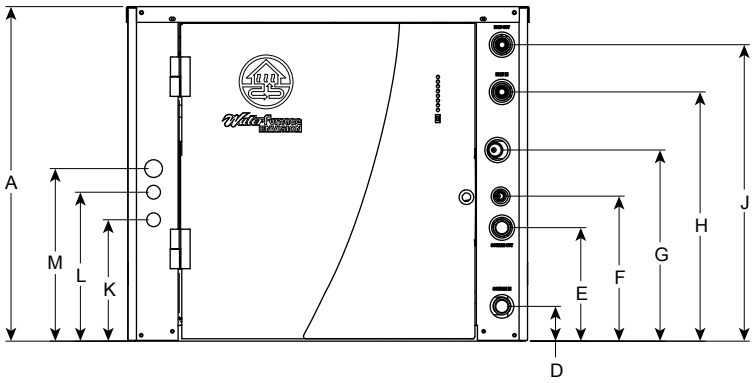

Model	Height	Width	Depth	Water In	Water Out	Service Valve		HWG In	HWG Out	Low Voltage	External Pump	Line Voltage
						Liquid	Gas					
	A	B	C	D	E	F	G	H	J	K	L	M
022-030	19.25	22.50	26.50	1.93	6.93	8.44	11.55	13.43	16.43	8.55	10.30	11.80
038-072	21.25	25.50	31.50	2.21	7.21	9.21	12.14	15.83	18.83	7.71	9.46	10.96

Dimensions are in inches.
Decorative molding and water connections extend 1.2 in. [30.5 mm] beyond the front of the cabinet.
Refrigerant line connections extend 2 in. [50.8 mm] beyond the front of the cabinet.

General Installation Information

Safety Considerations

WARNING: Before performing service or maintenance operations on a system, turn off main power switches to the indoor unit. If applicable, turn off the accessory heater power switch. Electrical shock could cause personal injury.

Installing and servicing heating and air conditioning equipment can be hazardous due to system pressure and electrical components. Only trained and qualified service personnel should install, repair or service heating and air conditioning equipment. Untrained personnel can perform the basic maintenance functions of cleaning coils and cleaning and replacing filters. All other operations should be performed by trained service personnel. When working on heating and air conditioning equipment, observe precautions in the literature, tags and labels attached to the unit and other safety precautions that may apply, such as the following safety measures:

- Follow all safety codes.
- Wear safety glasses and work gloves.
- Use a quenching cloth for brazing operations.
- Have a fire extinguisher available for all brazing operations.

Moving and Storage

Move units in the normal "up" orientation. Units may be moved and stored per the information on the packaging. Do not stack more than three units in total height. Do not attempt to move units while stacked. When the equipment is received, all items should be carefully checked against the bill of lading to be sure all crates and cartons have been received. Examine units for shipping damage, removing the units from the packaging if necessary. Units in question should also be internally inspected. If any damage is noted, the carrier should make the proper notation on the delivery receipt, acknowledging the damage.

Unit Location

Locate the unit in an indoor area that allows for easy removal of the access panels. Location should have enough space for service personnel to perform maintenance or repair. Provide sufficient room to make water, electrical and refrigerant line connections. Any access panel screws that would be difficult to remove after the unit is installed should be removed prior to setting the unit. Care should be taken when units are located in unconditioned spaces to prevent damage from frozen water lines and excessive heat that could damage electrical components.

Air Coil Location

Refer to the air handler manufacturer's instructions for the blower coil unit for details on installing the air handling portion of the system.

Condensate Drain

Follow the blower coil manufacturer's instructions.

Duct System

All blower coil units/air coils must be installed as specified by the manufacturer's installation instructions; however, the following recommendations should be considered to minimize noise and service problems.

An air filter must always be installed upstream of the air coil on the return air side of the air handler or furnace. If there is limited access to the filter rack for normal maintenance, it is suggested that a return air filter grill be installed. Be sure that the return duct is properly installed and free of leaks to prevent dirt and debris from bypassing the filter and plugging the air coil.

In applications using galvanized metal ductwork, a flexible duct connector is recommended on both the supply and return air plenums to minimize vibration from the blower. To maximize sound attenuation of the unit blower, the supply and return plenums should include an internal duct liner of 1-inch thick glass fiber or be constructed of ductboard. Insulation is usually not installed in the supply branch ducts. Ducts in unconditioned areas should be wrapped with a minimum of 1-inch duct insulation. Application of the unit to uninsulated ductwork in an unconditioned space is not recommended as the unit's performance will be adversely affected. If the air handler is connected to existing ductwork, a previous check should have been made to assure that the duct system has the capacity to handle the air required for the unit application. If ducting is too small, as in replacement of heating only systems, larger ductwork should be installed. All existing ductwork should be checked for leaks and repairs made accordingly. The duct systems and diffusers should be sized to handle the design airflow quietly. If air noise or excessive airflow is a problem, the blower speed can be changed to a lower speed to reduce airflow. This will reduce the performance of the unit slightly in heating; however, it will increase the temperature rise across the air coil. Airflow must still meet minimum requirements.

Equipment Selection

The following guidelines should be used when mating an Envision Split to an air handler/coil.

- Select R-410A components only.
- Select 13 SEER or higher air handler/coil.
- Match the air handler to the air handler coil data table.
- Indoor matching adjustable TXV should be used with any air handler/coil. Fixed orifice or cap tube systems should not be used.

Utilizing Existing Coil or Air Handler

It is recommended that a new R-410A air handler be installed with an Envision Split considering the long term benefits of reliability, warranty, etc. versus the short term installation cost savings. However, the existing air handler may be retained provided the following:

- Coil currently is R-410A rated
- Coil uses a TXV. No capillary or fixed orifice systems should be used

General Installation Information cont.

- A life expectancy of more than 7 years remaining for the air handler and components
- Flush air coil and line set

When utilizing the existing air coil or line set, only flushing compounds that vaporize should be used; which means they are packaged in a pressurized disposable cylinder. It is preferable to use a flushing agent that removes oil, water, and acid, plus, is biodegradeable and non-toxic. The flushing agent should be safe to use with both HCFC and HFC refrigerants. Once a flushing agent has been selected, follow the instructions provided with the product.

The first step should be purging the lines or air coil with nitrogen. Purging with nitrogen first will remove some of the particulate and residual oil which will allow the flushing agent to work better. Never blow the flushing agent through a compressor, filter drier, or txv as it will cause the components to fail.

When flushing is complete and the final system is assembled, an acid check should be preformed on the system. Acid test kits are available from most HVACR distributors.

Connection to Air Coil

Figures 1 and 2 illustrate typical Envision Split installations. Reference the Line Set Sizes table for typical line set diameters and maximum length. Line sets over 60 feet are not recommended. Longer line sets will significantly reduce capacity and efficiency of the system as well as adversely effect the system reliability due to poor oil return. If the line set is kinked or deformed and cannot be reformed, the bad section of pipe should be replaced. A restricted line set will affect unit performance. As in all R-410A equipment, a reversible liquid line filter drier is required to insure all moisture is removed from the system. This drier should be replaced whenever “breaking into” the system for service. All line sets should be insulated with a minimum of 1/2 in. closed cell insulation. All exterior insulation should be painted with UV resistant paint or covering to ensure long insulation life.

Air Handler Installation

Air handlers used with dual capacity units must be capable of operating with a minimum of 2 blower speeds. Refer to the manufacturer’s instructions for the blower coil unit for details on installing the air handling portion of the system. All blower coil units/air coils must be installed as specified by the manufacturer’s installations instructions. However, the following recommendations should be considered to minimize noise and service problems.

An air filter must always be installed upstream of the air coil on the return air side of the air handler or furnace. If there is limited access to the filter rack for normal maintenance, it is suggested that a return air filter grille be installed. Be sure that the return duct is properly installed and free of leaks to prevent dirt and debris from bypassing the filter and plugging the air coil.

Ensure that the line set size is appropriate to the capacity of the unit (refer to Line Set Sizes table). Line sets should be routed as directly as possible, avoiding unnecessary bends or turns. All wall penetrations should be sealed properly. Line set should not come into direct contact with water pipes, floor joists, wall studs, duct work, floors, walls and brick. Line set should not be suspended from joists or studs with a rigid wire or strap which comes into direct contact with the tubing. Wide hanger strips which conform to the shape of the tubing are recommended. Isolate hanger straps from line set insulation by using metal sleeves bent to conform to the shape of insulation. Line set insulation should be pliable, and should completely surround the refrigerant line.

NOTES: Improper installation of equipment may result in undesirable noise levels in the living areas.

Figure 1: Typical Split System Application with Remote Blower Coil

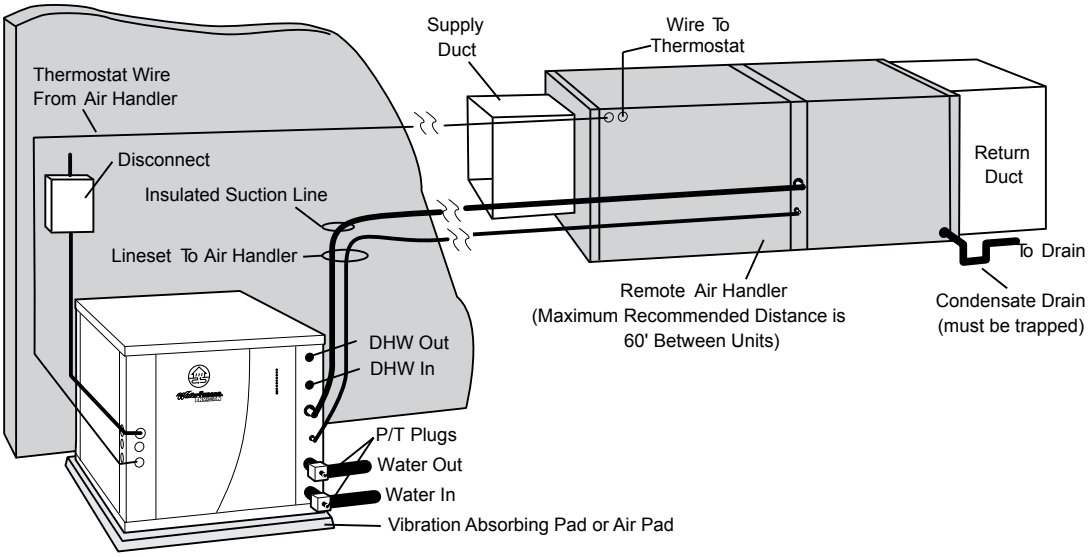

General Installation Information cont.

Dual Fuel Systems

Envision units can be connected to fossil fuel furnaces that include an A-coil or slab coil. Dual fuel installations utilize the Envision heat pump for heating until the point that auxiliary heat is called for on the thermostat. At that point, the furnace will be enabled and the heat pump will be disabled. The Envision heat pump provides air conditioning through the furnace's refrigerant coils.

Refer to the furnace manufacturer's installation manual for the furnace installation, wiring and coil insertion. A WaterFurnace Dual Fuel thermostat, a field-installed DPST relay or dual capacity auxiliary heat relay is required. See Figure 2 for typical Dual Fuel application.

In add-on Envision Split applications, the coil should be located in the supply side of the furnace to avoid condensation damage to the furnace heat exchanger. A high temperature limit should be installed upstream of the coil to de-energize the compressor whenever the furnace is operating. Without this switch, the Envision Split will trip out on high pressure. A dual fuel thermostat can remove the Y1 and Y2 calls when a W call is energized to allow gas furnace backup on an Envision Split application. Refer to thermostat wiring diagram for details.

Figure 2: Typical Split System Heat Pump Coil Add-On Fossil Fuel Furnace

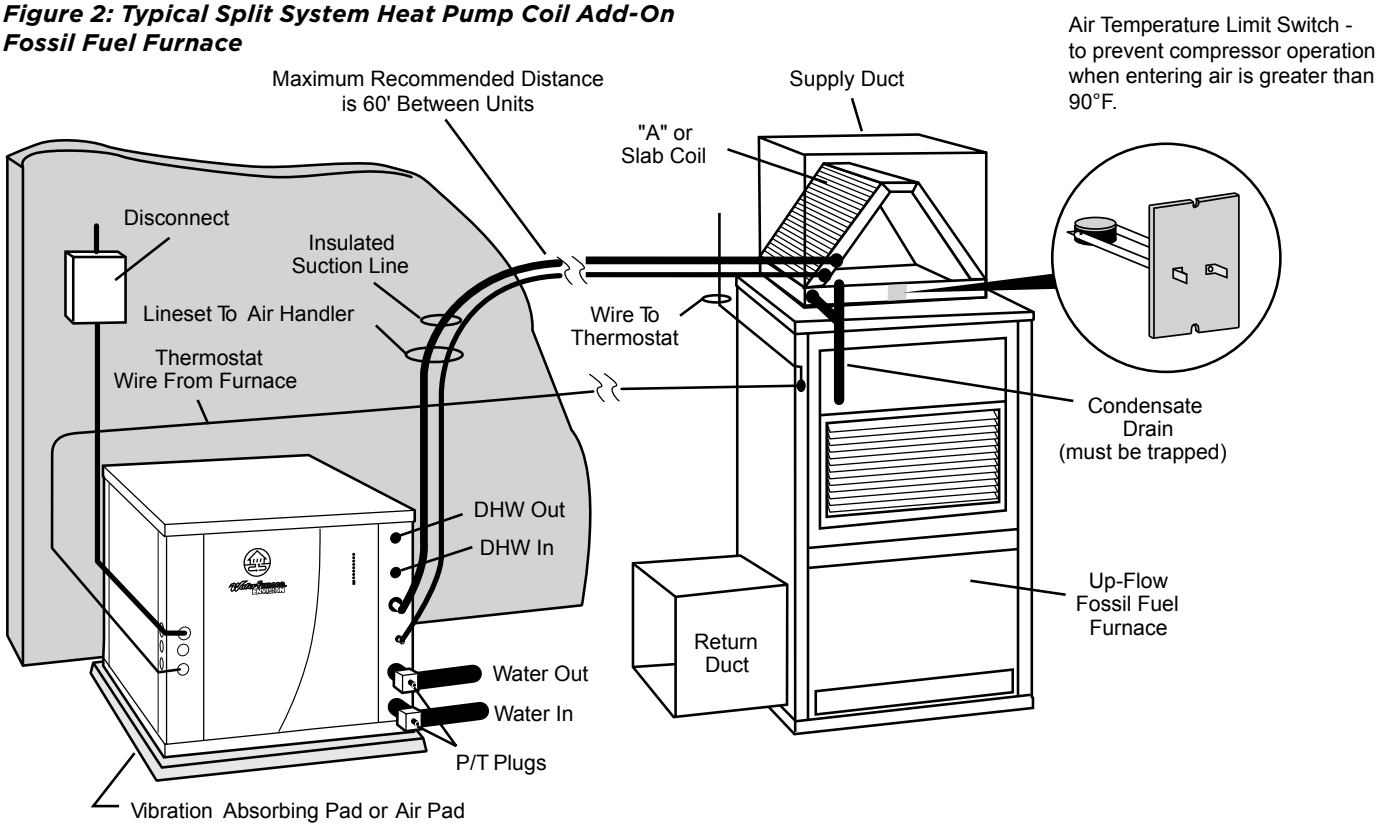

General Installation Information cont.

Air Handler Sizing Selection

The Envision Air Handlers are designed for R410a refrigerant and should be matched with Envision Split series compressor section according to the table below.

Air Handler	Indoor Split Model (Single)	Indoor Split Model (Dual Capacity)	Outdoor Split Model (Dual Capacity)	Airflow(CFM)	Electric Heat (kW)
NAH022A*1R**	NSZ022	-		800	5
NAH026A*1R**	-	NDZ026	NDS026	925	5
NAH030A*1R**	NSZ030	-	-	980	5, 10
NAH036A*1R**	NSZ036	-	-	1225	5, 10
NAH036A*1R**	-	NDZ038	NDS038	1225	5, 10
NAH042A*1R**	NSZ042	-	-	1425	10, 15
NAH048A*1R**	NSZ048	-	-	1625	10, 15
NAH048A*1R**	-	NDZ049	NDS049	1625	10, 15
NAH060A*1R**	NSZ060	-	-	1760	10, 15, 20
NAH060A*1R**	-	NDZ064	NDS064	1760	10, 15, 20
NAH060A*1R**	NSZ070	-	-	1760	10, 15, 20
NAH060A*1R**	-	NDZ072	NDS072	1760	10, 15, 20

6/9/08

Water Piping

The proper water flow must be provided to each unit whenever the unit operates. To assure proper flow, use pressure/temperature ports to determine the flow rate. These ports should be located at the supply and return water connections on the unit. The proper flow rate cannot be accurately set without measuring the water pressure drop through the refrigerant-to-water heat exchanger.

All source water connections on residential units are swivel piping fittings (see Figure 3) that accept 1 in. male pipe threads (MPT). The swivel connector has a rubber gasket seal similar to a rubber hose gasket, which when mated to the flush end of any 1 in. threaded pipe provides a leak-free seal without the need for thread sealing tape or compound. Check to ensure that the rubber seal is in the swivel connector prior to attempting any connection. The rubber seals are shipped attached to the waterline. To make the connection to a ground loop system, mate the brass connector (supplied in CK4L connector kit) against the rubber gasket in the swivel connector and thread the female locking ring onto the pipe threads, while maintaining the brass connector in the desired direction. Tighten the connectors by hand, then gently snug the fitting with pliers to provide a leak-proof joint. When connecting to an open loop (ground water) system, thread the 1 in. MPT fitting (SCH80 PVC or copper) into the swivel connector and tighten in the same manner as noted above. The open and closed loop piping system should include pressure/temperature taps for serviceability.

Never use flexible hoses smaller than 1 in. inside diameter on the unit. Limit hose length to 10 ft. per connection. Check carefully for water leaks.

Figure 3: Swivel Connections (Residential Units)

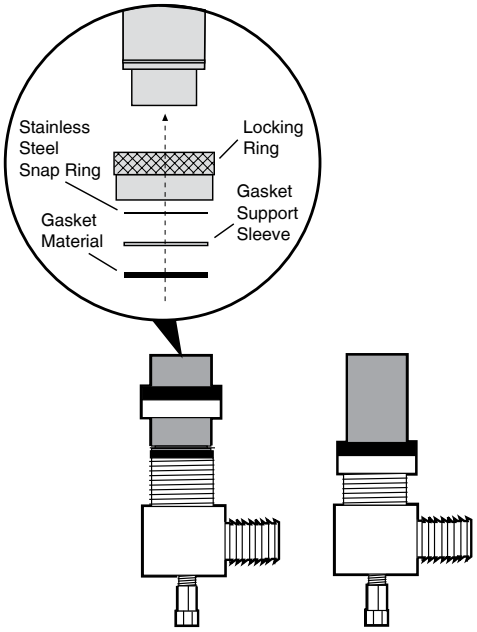

Open Loop - Well Water Systems

Typical open loop piping is shown below. Always maintain water pressure in the heat exchanger by placing water control valves at the outlet of the unit to prevent mineral precipitation. Use a closed bladder type expansion tank to minimize mineral formation due to air exposure. Ensure proper water flow through the unit by checking pressure drop across the heat exchanger and comparing it to the figures in the unit capacity data tables in the specification catalog. Usually 1.5-2 GPM of flow per ton of cooling capacity is recommended in open loop applications. In dual capacity units, stage 1 is 70% of the total tonnage. Therefore, due to only minor differences in flow rate from low to high, only one solenoid valve should be used. The valve should be sized for full flow.

Discharge water from the unit is not contaminated in any manner and can be disposed of in various ways depending on local building codes (i.e. recharge well, storm sewer, drain field, adjacent stream or pond, etc.). Most local codes forbid the use of sanitary sewer for disposal. Consult your local building and zoning departments to ensure compliance in your area.

NOTES: For open loop/groundwater systems or systems that do not contain an antifreeze solution, set SW2-Switch #2 to the "WELL" position (Refer to the DIP Switch Settings table.) Slow opening/closing solenoid valves (type VM) are recommended to eliminate water hammer.

Figure 4: Typical Split System Application Open Loop - Well Water

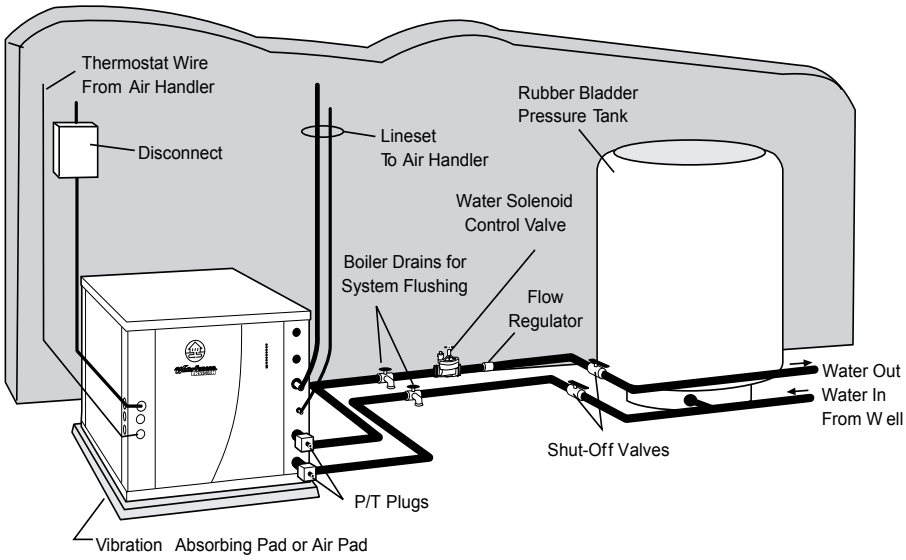

Figure 5: Open Loop Solenoid Valve Connection Option
Typical quick operating external 24V water solenoid valve (type PPV100 or BPV100) wiring.

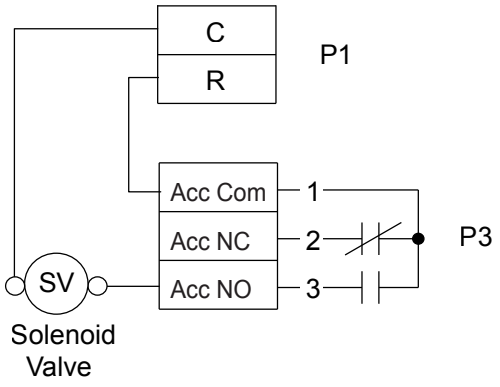

Figure 9b: Open Loop Solenoid Valve Connection Option
Typical slow operating external 24V water solenoid valve (type VM) wiring.

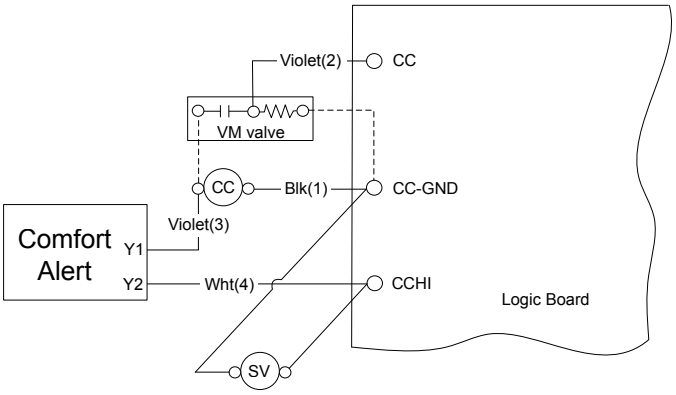

Open Loop - Well Water Systems cont.

Solenoid Wiring

Water control valves draw their power directly from a unit's 24V transformer and can overload and possibly burn out the transformer. Check total VA draw of the water valve and ensure that it is under 15 VA.

Water Quality

In ground water situations where scaling could be heavy or where biological growth such as iron bacteria will be present, a closed loop system is recommended. The heat exchanger coils in ground water systems may, over a period of time, lose heat exchange capabilities due to a buildup of mineral deposits inside. These can be cleaned, but only by a qualified service mechanic, as special solutions and pumping equipment are required. Hot water generator coils can likewise become scaled and possibly plugged. In areas with extremely hard water, the owner should be informed that the heat exchanger may require occasional flushing. Failure to adhere to the guidelines in the water quality table could result in loss of warranty.

Material		Copper	90/10 Cupro-Nickel	316 Stainless Steel
pH	Acidity/Alkalinity	7- 9	7 - 9	7 - 9
Scaling	Calcium and Magnesium Carbonate	(Total Hardness) less than 350 ppm	(Total Hardness) less than 350 ppm	(Total Hardness) less than 350 ppm
Corrosion	Hydrogen Sulfide	Less than .5 ppm (rotten egg smell appears at 0.5 PPM)	10 - 50 ppm	Less than 1 ppm
	Sulfates	Less than 125 ppm	Less than 125 ppm	Less than 200 ppm
	Chlorine	Less than .5 ppm	Less than .5 ppm	Less than .5 ppm
	Chlorides	Less than 20 ppm	Less than125 ppm	Less than 300 ppm
	Carbon Dioxide	Less than 50 ppm	10 - 50 ppm	10- 50 ppm
	Ammonia	Less than 2 ppm	Less than 2 ppm	Less than 20 ppm
	Ammonia Chloride	Less than .5 ppm	Less than .5 ppm	Less than .5 ppm
	Ammonia Nitrate	Less than .5 ppm	Less than .5 ppm	Less than .5 ppm
	Ammonia Hydroxide	Less than .5 ppm	Less than .5 ppm	Less than .5 ppm
	Ammonia Sulfate	Less than .5 ppm	Less than .5 ppm	Less than .5 ppm
	Total Dissolved Solids (TDS)	Less than 1000 ppm	1000-1500 ppm	1000-1500 ppm
	LSI Index	+0.5 to -.05	+0.5 to -.05	+0.5 to -.05
Iron Fouling (Biological Growth)	Iron, Fe^{2+} (Ferrous) Bacterial Iron Potential	< .2ppm	< .2 ppm	< .2 ppm
	Iron Oxide	Less than 1 ppm. Above this level deposition will occur.	Less than 1 ppm. Above this level deposition will occur.	Less than 1 ppm. Above this level deposition will occur.
Erosion	Suspended Solids	Less than 10 ppm and filtered for max of 600 micron size	Less than 10 ppm and filtered for max of 600 micron size	Less than 10 ppm and filtered for max of 600 micron size
	Threshold Velocity (Fresh Water)	< 6 ft/sec	< 6 ft/sec	<6 ft/sec

Note:
Grains = PPM divided by 17
mg/l is equivalent to PPM

Closed Loop - Ground Source Systems

NOTE: For closed loop systems with antifreeze protection, set SW2-2 to the "loop" position (see DIP Switch Settings table).

Once piping is completed between the unit, pumps and the ground loop (see figure below), final purging and charging of the loop is required. A flush cart (or a 1.5 HP pump minimum) is needed to achieve adequate flow velocity in the loop to purge air and dirt particles from the loop itself. Antifreeze solution is used in most areas to prevent freezing. Flush the system adequately to remove as much air as possible then pressurize the loop to a static pressure of 40-50 PSI (summer) or 50-75 PSI (winter). This is normally adequate for good system operation. Loop static pressure will fluctuate with the seasons. Pressures will be higher in the winter months than during the cooling season. This fluctuation is normal and should be considered when initially charging the system.

After pressurization, be sure to remove the plug in the end of the loop pump motor(s) (if applicable) to allow trapped air to be discharged and to ensure that the motor housing has been flooded. Ensure that the loop pumps provide adequate flow through the unit(s) by checking the pressure drop across the heat exchanger and comparing it to the unit capacity data in the specification catalog. Usually 2.5 to 3 GPM of flow per ton of cooling capacity is recommended in earth loop applications.

Multiple Units on One Flow Center

When two units are connected to one loop pumping system, pump control is automatically achieved by connecting the SL terminals on connector P2 in both units with 2-wire thermostat wire. These terminals are polarity dependant (see Figure 8). The loop pump(s) may be powered from either unit, whichever is more convenient. If either unit calls, the loop pump(s) will automatically start. The use of two units on one flow center is generally limited to a total of 20 GPM capacity.

Figure 7: Typical Split System Application Closed Loop - Earth Coupled

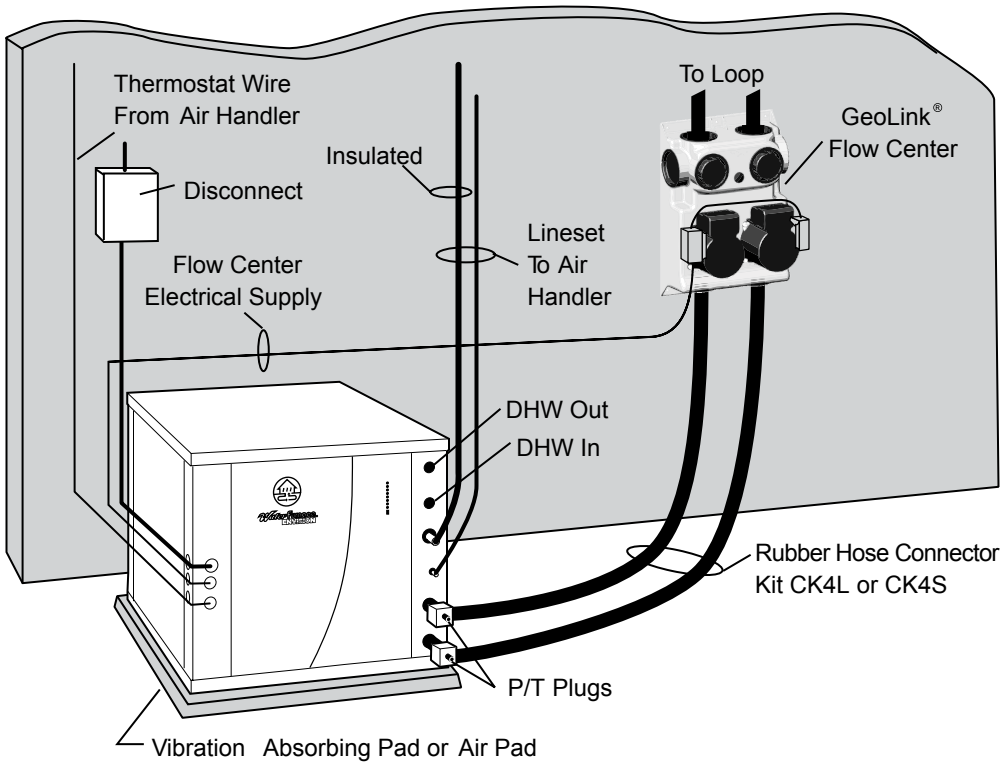

Figure 8: Primary/Secondary Hook-up

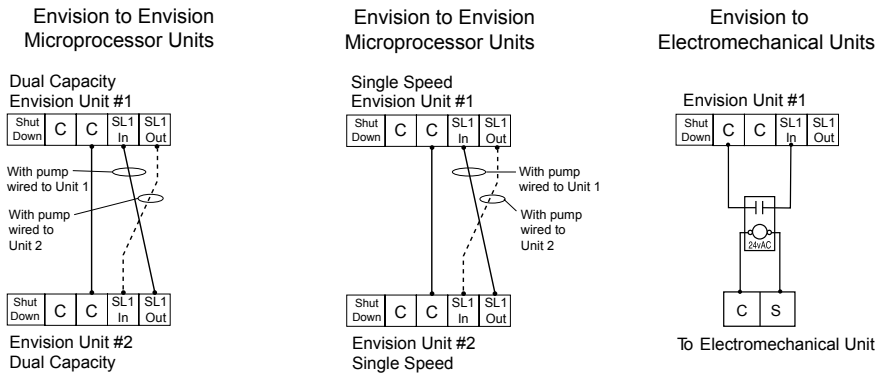

Hot Water Generator Connections

The heat reclaiming hot water generator coil is vented double-wall copper construction and is suitable for potable water. To maximize the benefits of the hot water generator a minimum 50-gallon water heater is recommended. For higher demand applications, use an 80-gallon water heater or two 50-gallon water heaters connected in a series as shown below. A geo storage tank should not be used in this application unless it is plumbed in a series with an electric water heater. The geo storage tank is equipped with a single 4500 Watt element and will not be able to provide adequate water heating if used as a standalone water heater. Electric water heaters are recommended. Make sure all local electrical and plumbing codes are followed when installing a hot water generator. Residential units with hot water generators contain an internal circulator and fittings. A water softener is recommended for hard water applications (greater than 10 grains or 170 ppm total hardness).

NOTE: Under certain conditions, Envision dual capacity units operate with very low refrigerant discharge temperatures, producing little or no water heating capability. This scenario occurs when the unit is operating with cold entering source water (loop or well). Allowing the hot water generator pump to operate during these conditions actually removes heat from the DHW circulating through the unit. To overcome this, Envision unit microprocessors have been programmed to disengage the hot water generator pump during such conditions. (During low capacity cooling operation, the pump will operate only if the DHW temperature entering the unit is less than the liquid line temperature plus 35° F. During high capacity cooling operation, the pump will operate only if the DHW temperature is less than the liquid line temperature plus 60°F.) Using a preheat tank, as shown in Figure 11, will maximize hot water generator capabilities.

Water Tank Preparation

To install a unit with hot water generator, follow these installation guidelines.

1. Turn off the power to the water heater.
2. Attach a water hose to the water tank drain connection and run the other end of the hose to an open drain or outdoors.
3. Close the cold water inlet valve to the water heater tank.
4. Drain the tank by opening the valve on the bottom of the tank, then open the pressure relief valve or hot water faucet.
5. Flush the tank by opening the cold water inlet valve to the water heater to free the tank of sediments. Close when draining water is clear.
6. Disconnect the garden hose and remove the drain valve from the water heater.
7. Refer to Plumbing Installation and Hot Water Generator Startup.

CAUTION: Elements will burn out if energized dry.

Figure 10: Typical Hot Water Generator Installation

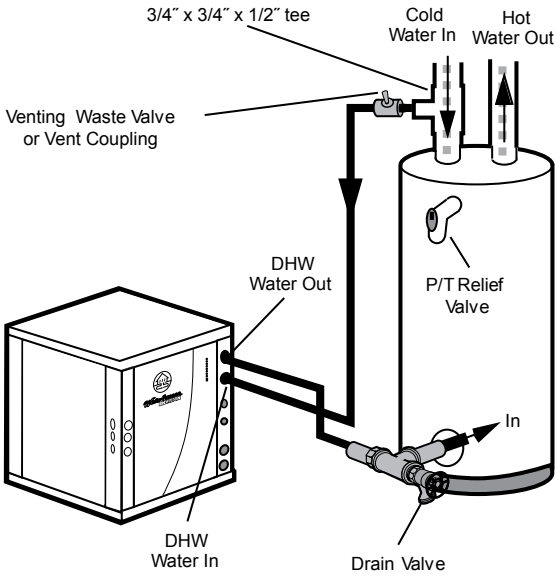

Figure 11: Hot Water Generator Installation in Preheat Tank

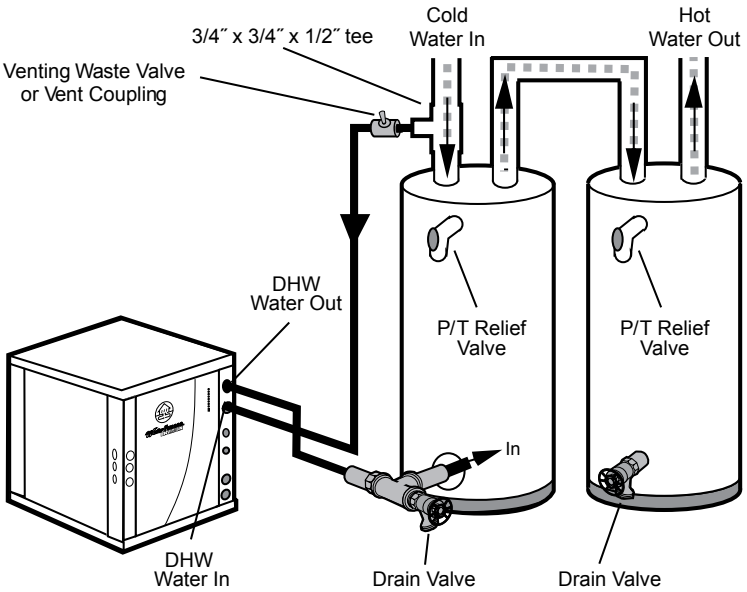

Hot Water Generator Connections cont.

Plumbing Installation

1. Inspect the dip tube in the water heater cold inlet for a check valve. If a check valve is present it must be removed or damage to the hot water generator circulator will occur.
2. Remove drain valve and fitting.
3. Thread the 3/4-inch NPT x 3-1/2-inch brass nipple into the water heater drain port.
4. Attach the center port of the 3/4-inch FPT tee to the opposite end of the brass nipple.
5. Attach the 1/2-inch copper to 3/4-inch NPT adaptor to the side of the tee closest to the unit.
6. Install the drain valve on the tee opposite the adaptor.
7. Run interconnecting tubing from the tee to DHW water out.
8. Cut the cold water "IN" line going to the water heater.
9. Insert the reducing solder tee in line with cold water "IN" line as shown.
10. Run interconnecting copper tubing between the unit DHW water "IN" and the tee (1/2-inch nominal). The recommended maximum distance is 50 feet.
11. To prevent air entrapment in the system, install a vent coupling at the highest point of the interconnecting lines.
12. Insulate all exposed surfaces of both connecting water lines with 3/8-inch wall closed cell insulation.

NOTE: All plumbing and piping connections must comply with local plumbing codes.

Hot Water Generator Startup

1. Close the drain valve to the water heater.
2. Open the cold water supply to the tank.
3. Open a hot water faucet in the building to bleed air from the system. Close when full.
4. Open the pressure relief valve to bleed any remaining air from the tank, then close.
5. If so equipped, unscrew the indicator plug 1 turn on the motor end of the pump until all air is purged from the pump, then tighten the plug. Use vent couplings to bleed air from the lines.
6. Carefully inspect all plumbing for water leaks and correct as required.
7. Before restoring electrical supply to the water heater, adjust the temperature setting on the tank.
   - On tanks with both upper and lower elements, the lower element should be turned down to the lowest setting, approximately 100°F. The upper element should be adjusted to 120°F to 130°F. Depending upon the specific needs of the customer, you may want to adjust the upper element differently.
   - On tanks with a single element, lower the thermostat setting to 120°F.
8. After the thermostat(s) is adjusted, replace the access cover and restore electrical supply to the water heater.
9. Make sure that any valves in the hot water generator water circulating circuit are open.
10. Turn on the unit to first stage heating.
11. The DHW pump should be running. When the pump is first started, open the inspection port 1 turn (if equipped) until water dribbles out, then replace. Allow the pump to run for at least five minutes to ensure that water has filled the circulator properly. Be sure the switch for the DHW pump (SW4) is "ON". The DHW "OFF" LED on the unit should not be illuminated.
12. The temperature difference between the water entering and leaving the hot water generator should be 5°F to 15°F. The water flow should be approximately 0.4 GPM per ton of nominal cooling.
13. Allow the unit to heat water for 15 to 20 minutes to be sure operation is normal.

CAUTION: Never operate the DHW circulating pump while dry. If the unit is placed in operation before the hot water generator piping is connected, be sure that the pump switch is set to the OFF position.

Electrical Data

Be sure the available power is the same voltage and phase as that shown on the unit serial plate. Line and low voltage wiring must be done in accordance with local codes or the National Electric Code, whichever is applicable. See unit electrical data for fuse or circuit breaker sizing information.

Model	Rated Voltage	Voltage Min/Max	Compressor				HWA Pump FLA	Ext Loop FLA	Total Unit FLA	Min Circ Amp	Max Fuse/ HACR
			MCC	RLA	LRA	LRA*					
022	208-230/60/1	197/253	14.0	9.0	48.0	17.0	0.4	5.4	14.8	17.1	25
030	208-230/60/1	197/253	20.0	12.8	58.3	21.0	0.4	5.4	18.6	21.8	30
036	208-230/60/1	197/253	22.0	14.1	73.0	26.0	0.4	5.4	19.9	23.4	35
042	208-230/60/1	197/253	26.0	16.6	79.0	28.0	0.4	5.4	22.4	26.6	40
048	208-230/60/1	197/253	31.0	19.8	109.0	38.0	0.4	5.4	25.6	30.6	50
060	208-230/60/1	197/253	41.2	26.4	134.0	47.0	0.4	5.4	32.2	38.8	60
070	208-230/60/1	197/253	47.0	30.1	158.0	55.0	0.4	5.4	35.9	43.4	70
026	208-230/60/1	197/253	16.0	10.2	52.0	18.0	0.4	5.4	16.0	18.6	25
038	208-230/60/1	197/253	26.0	16.6	82.0	29.0	0.4	5.4	22.4	26.6	40
049	208-230/60/1	197/253	33.0	21.1	96.0	34.0	0.4	5.4	26.9	32.2	50
064	208-230/60/1	197/253	40.0	25.6	118.0	41.0	0.4	5.4	31.4	37.8	60
072	208-230/60/1	197/253	42.5	27.2	150.0	53.0	0.4	5.4	33.0	39.8	60

Rated voltage of 208-230/60/1
HACR circuit breaker in USA only
Min/Max Voltage of 197/253
All fuses Class RK-5
* With optional IntelliStart

5/6/09

Thermostat Wiring

Single and Dual Capacity Wiring Diagram

Field low voltage point to point wiring:

From Thermostat	To Air Handler	To Compressor Section
C	C	C
R	R	R
G	G	
O	O	O
Y1	Y1	Y1
Y2	Y2	Y2
W2	W	
L		L

Air Handler transformer must be 75VA.

5/29/08

Wiring Schematics

Dual Capacity Split Wiring Schematic - 208-230/60/1

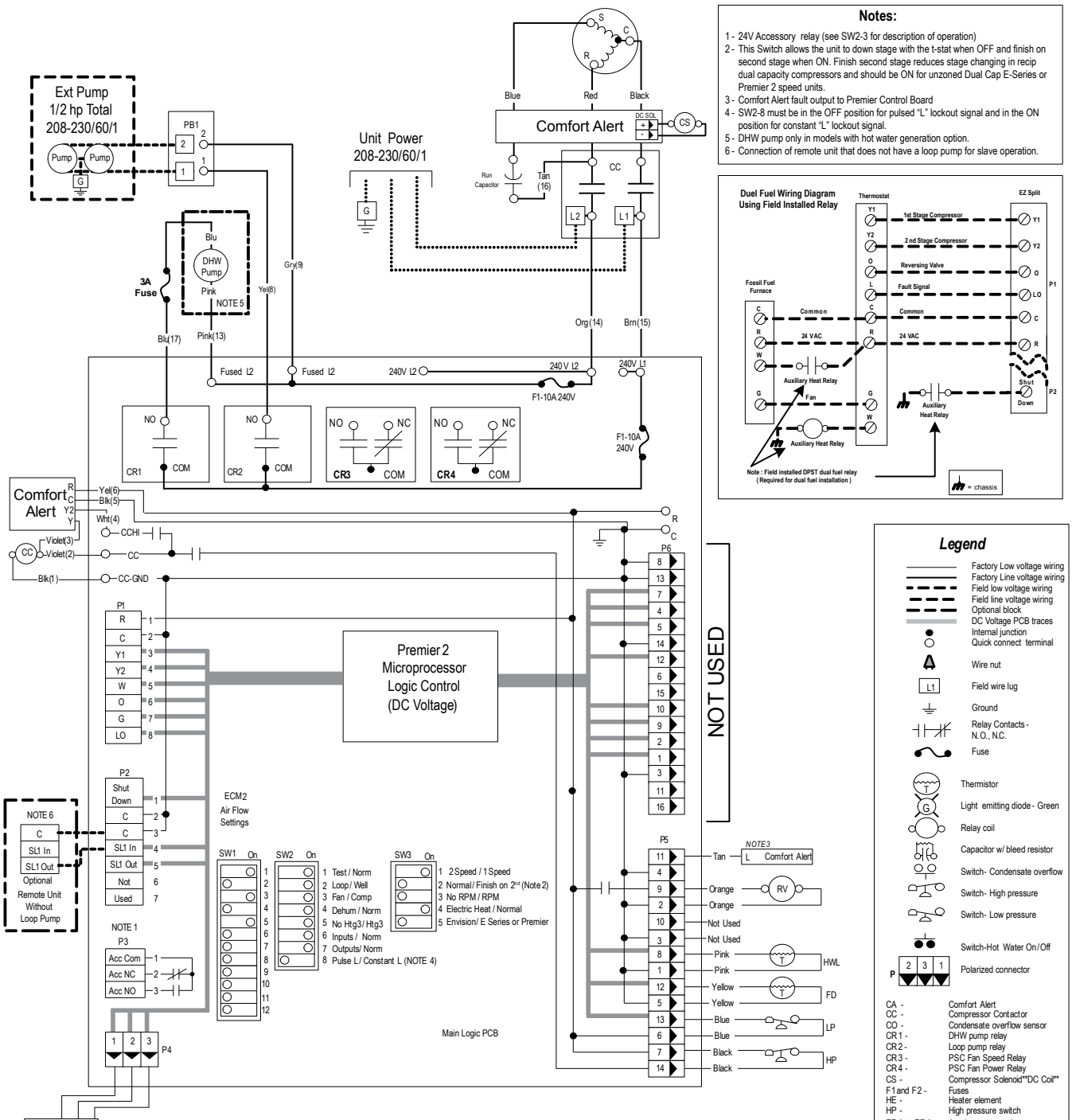

Notes:

1 - 24V Accessory relay (see SW2-3 for description of operation)
2 - This Switch allows the unit to down stage with the t-stat when OFF and finish on second stage when ON. Finish second stage reduces stage changing in recip dual capacity compressors and should be ON for unzoned Dual Cap E-Series or Premier 2 speed units.
3 - Comfort Alert fault output to Premier Control Board
4 - SW2-8 must be in the OFF position for pulsed "L" lockout signal and in the ON position for constant "L" lockout signal.
5 - DHW pump only in models with hot water generation option.
6 - Connection of remote unit that does not have a loop pump for slave operation.

Legend

- Factory Low voltage wiring
- Factory Line voltage wiring
- Field low voltage wiring
- Field line voltage wiring
- Optional block
- DC Voltage PCB traces
- Internal junction
- Quick connect terminal
- Wire nut
- Field wire lug
- Ground
- Relay Contacts - N.O., N.C.
- Fuse
- Thermistor
- Light emitting diode - Green
- Relay coil
- Capacitor w/ bleed resistor
- Switch- Condensate overflow
- Switch- High pressure
- Switch- Low pressure
- Switch-Hot Water On/Off
- Polarized connector

CA -	Comfort Alert
CC -	Compressor Contactor
CO -	Condensate overflow sensor
CR1 -	DHW pump relay
CR2 -	Loop pump relay
CR3 -	PSC Fan Speed Relay
CR4 -	PSC Fan Power Relay
CS -	Compressor Solenoid**DC Coil**
F1 and F2 -	Fuses
HE -	Heater element
HP -	High pressure switch
ER1 to ER4 -	Aux heat stage relays
LP -	Low pressure switch
PB1, PB2 -	Power blocks
PS -	Power strip
RV -	Reversing Valve coil
SW1 -	DIP package12 position
SW2 -	DIP package8 position
SW3 -	DIP package5 position
SW4 -	Hot water pump enable switch
TS -	Thermal limit switch
HWL -	Hot water limit sensor
SC -	Start Contactor
SR -	Start Relay
FD -	Freeze Detection Sensor

Status LED PCB

R R R R R G Y R

SW4

LED	Normal Display Mode	Diagnostic Modes			
		Current Fault Status	Inputs	Outputs	Outputs 2
	Field Selection Dips - #1 On, #6 On, #7 On	#1 Off, #6 On, #7 On	#6 Off, #7 On	#6 On, #7 Off	#6 Off, #7 Off
Drain	Drain pan overflow Lockout	Drain pan overflow	Y1	Compressor Lo	Blower Lo
Water Flow	FD thermistor (loop<15°F, well<30°F) Lockout	FD thermistor (loop<15°F, well < 30°F)	Y2	Compressor Hi	Blower Med
High Press	High Pressure	High Pressure	O	RV	Blower Hi
Low Press / CA	Low Pressure / Comfort Alert	Low Pressure / Comfort Alert	G	FAN	Aux Heat#1
Air Flow	ECM2 RPM< 100 rpm Lockout	ECM2 RPM < 100 rpm	W	DHW Pump	Aux Heat#2
Status	Microprocessor malfunction*	Not Used	SL1	Loop Pump1	AuxHeat #3
DHW Limit	HWL thermistor > 130°F	HWL thermistor > 130°F	SL2	Loop Pump2	Aux Heat#4
DHW off	DHW pump switch off	DHW pump switch off	--	--	--

*Green LED not flashing

Comfort Alert Status		
LED	Flash Code	Description
Green	Solid	Module Has Power
Red	Solid	Y1 Present But Compressor Not Running
Yellow	Code 1	Long Run Time
	Code 2	System Pressure Trip
	Code 3	Short Cycling
	Code 4	Locked Rotor
	Code 5	Open Circuit
	Code 6	Open Start Circuit
	Code 7	Open Run Circuit
	Code 8	Welded Contactor
	Code 9	Low Voltage

97P774-31 12 /8/08

Wiring Schematics cont.

Single Speed Split Wiring Schematic - 208-230/60/1

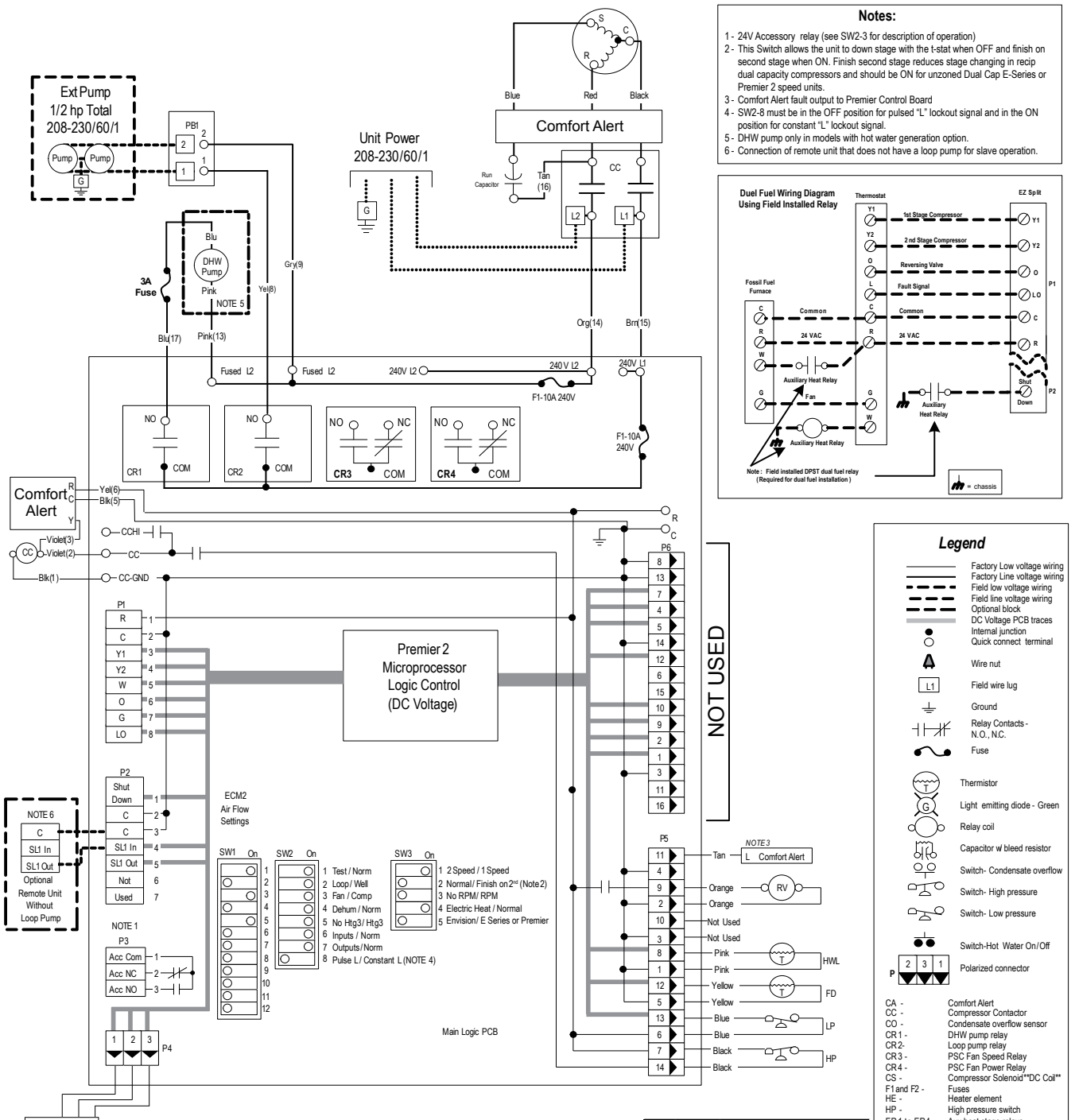

Notes:

1 - 24V Accessory relay (see SW2-3 for description of operation)
2 - This Switch allows the unit to down stage with the t-stat when OFF and finish on second stage when ON. Finish second stage reduces stage changing in recip dual capacity compressors and should be ON for unzoned Dual Cap E-Series or Premier 2 speed units.
3 - Comfort Alert fault output to Premier Control Board
4 - SW2-8 must be in the OFF position for pulsed "L" lockout signal and in the ON position for constant "L" lockout signal.
5 - DHW pump only in models with hot water generation option.
6 - Connection of remote unit that does not have a loop pump for slave operation.

Legend

- Factory Low voltage wiring
- Factory Line voltage wiring
- Field low voltage wiring
- Field line voltage wiring
- Optional block
- DC Voltage PCB traces
- Internal junction
- Quick connect terminal
- Wire nut
- L1 Field wire lug
- Ground
- Relay Contacts - N.O., N.C.
- Fuse
- Thermistor
- Light emitting diode - Green
- Relay coil
- Capacitor w bleed resistor
- Switch- Condensate overflow
- Switch- High pressure
- Switch- Low pressure
- Switch-Hot Water On/Off
- P 2 3 1 Polarized connector

CA -	Comfort Alert
CC -	Compressor Contactor
CO -	Condensate overflow sensor
CR1 -	DHW pump relay
CR2-	Loop pump relay
CR3 -	PSC Fan Speed Relay
CR4 -	PSC Fan Power Relay
CS -	Compressor Solenoid**DC Coil**
F1 and F2 -	Fuses
HE -	Heater element
HP -	High pressure switch
ER1 to ER4 -	Aux heat stage relays
LP -	Low pressure switch
PB1, PB2 -	Power blocks
PS -	Power strip
RV -	Reversing Valve coil
SW1 -	DIP package12 position
SW2 -	DIP package8 position
SW3 -	DIP package5 position
SW4 -	Hot water pump enable switch
TS -	Thermal limit switch
HWL -	Hot water limit sensor
SC -	Start Contactor
SR -	Start Relay
FD -	Freeze Detection Sensor

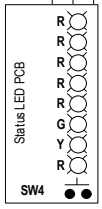

LED	Normal Display Mode	Diagnostic Modes			
		Current Fault Status	Inputs	Outputs	Outputs2
	Field Selection Dips - #1 On , #6 On , #7 On	#1 Off, #6 On, #7 On	#6 Off, #7 On	#6 On, #7 Off	#6 Off, #7 Off
Drain	Drain pan overflow Lockout	Drain pan overflow	Y1	Compressor Lo	Blower Lo
Water Flow	FD thermistor (loop<15°F, well<30°F) Lockout	FD thermistor (loop<15°F, well<30°F)	Y2	Compressor Hi	Blower Med
High Press	High Pressure	High Pressure	O	RV	Blower Hi
Low Press / CA	Low Pressure / Comfort Alert	Low Pressure / Comfort Alert	G	FAN	Aux Heat#1
Air Flow	ECM2 RPM < 100 rpm Lockout	ECM2 RPM < 100 rpm	W	DHW Pump	Aux Heat#2
Status	Microprocessor malfunction*	Not Used	SL1	Loop Pump1	AuxHeat #3
DHW Limit	HWL thermistor > 130°F	HWL thermistor > 130°F	SL2	Loop Pump2	Aux Heat#4
DHW off	DHW pump switch off	DHW pump switch off	--	--	--

*Green LED not flashing

Comfort Alert Status		
LED	Flash Code	Description
Green	Solid	Module Has Power
Red	Solid	Y1 Present But Compressor Not Running
Yellow	Code 1	Long Run Time
	Code 2	System Pressure Trip
	Code 3	Short Cycling
	Code 4	Locked Rotor
	Code 5	Open Circuit
	Code 6	Open Start Circuit
	Code 7	Open Run Circuit
	Code 8	Welded Contactor
	Code 9	Low Voltage

97P774-30 12/8/08

Microprocessor Control

Startup

The unit will not operate until all the inputs and safety controls are checked for normal conditions. At first power-up, a four-minute delay is employed before the compressor is energized.

Component Sequencing Delays

Components are sequenced and delayed for optimum space conditioning performance.

Accessory Relay

An accessory relay on the control board allows for field connection of solenoid valves, electronic air cleaners, etc. The accessory relay has a normally open output and a normally closed output.

Short Cycle Protection

The control employs a minimum "off" time of four minutes to provide for short cycle protection of the compressor.

Shutdown Mode

A 24VAC common signal to the “shutdown” input on the control board puts the unit into shutdown mode. Compressor, hot water pump and blower operation are suspended.

Safety Controls

The Envision control receives separate signals for a high pressure switch for safety, a low pressure switch to prevent loss of charge damage, and a low suction temperature thermistor for freeze detection. Upon a continuous 30-second measurement of the fault (immediate for high pressure), compressor operation is suspended, the appropriate lockout LED begins flashing. (Refer to the "Fault Retry" section below.)

Testing

The Envision control allows service personnel to shorten most timing delays for faster diagnostics. (Refer to the Field Selection DIP switch SW2-1.)

Fault Retry

All faults are retried twice before finally locking the unit out. An output signal is made available for a fault LED at the thermostat. The “fault retry” feature is designed to prevent nuisance service calls.

Diagnostics

The Envision control board allows all inputs and outputs to be displayed on the LEDs for fast and simple control board diagnosis. (Refer to the Field Selection DIP Switch SW2-1.)

Hot Water High Limit (Domestic Hot Water Option)

This mode occurs when the hot water input temperature is at or above 130°F for 30 continuous seconds. The DHW limit status LED on the unit illuminates and the hot water pump de-energizes. Hot water pump operations resume on the next compressor cycle or after 15 minutes of continuous compressor operation during the current thermostat demand cycle.

Hot Water Justification

Since compressor hot gas temperature is dependant on loop temperature in cooling mode, loop temperatures may be too low to allow proper heating of water. The control will monitor water and refrigerant temperatures to determine if conditions are satisfactory for heating water. The DHW limit status LED on the unit illuminates when conditions are not favorable for heating water.

Heating Operation

Heat, 1st Stage (Y1)

The blower motor is started immediately, the loop pump is energized 5 seconds after the “Y1” input is received, and the compressor is energized on low capacity 10 seconds after the “Y1” input. The hot water pump is cycled 30 seconds after the “Y1” input.

Heat, 2nd Stage (Y1,Y2) Single-Speed Units

The hot water pump is de-energized, which directs all heat to satisfying the thermostat, and the blower changes to high speed 15 seconds after the “Y2” input (ECM only).

Heat, 2nd Stage (Y1,Y2) Dual Capacity Units

The second stage compressor will be activated 5 seconds after receiving a “Y2” input as long as the minimum first stage compressor run time of 1 minute has expired. The ECM blower changes from medium to high speed 15 seconds after the “Y2” input.

The Comfort Alert will delay the second stage compressor until 5 seconds after it receives a “Y2” from the board.

Microprocessor Control cont.

Heat, 3rd Stage (Y1,Y2,W) Single-Speed Units

The first stage of resistance heat is energized 10 seconds after “W” input, and with continuous 3rd stage demand, the additional stages of resistance heat engage 90 seconds after the first stage.

Heat, 3rd Stage (Y1,Y2,W) Dual Capacity Units

The hot water pump is de-energized which directs all heat to satisfy the thermostat. The 1st stage of resistance heat is energized 10 seconds after “W” input, and with continuous 3rd stage demand, the additional stages of resistance heat engage 90 seconds after the first stage.

Emergency Heat (W only)

The blower is started on high speed, and the first stage of resistance heat is energized 10 seconds after the "W" input. Continuing demand will engage the additional stages of resistance heat 90 seconds after the first stage.

Cooling Operation

In all cooling operations, the reversing valve directly tracks the “O” input. Thus, anytime the “O” input is present, the reversing valve will be energized.

Cool, 1st Stage (Y1,O)

The blower motor and hot water pump are started immediately, the loop pump(s) is energized 5 seconds after the “Y1” input is received. The compressor will be energized (on low capacity for Dual Capacity units) 10 seconds after the “Y1” input. The ECM blower will operate at 85% of medium speed if in dehumidification mode.

Cool, 2nd Stage (Y1, Y2, O) Single Speed Units

The blower changes to high speed (85% of high speed if in dehumidification mode) 15 seconds after the “Y2” input (ECM only).

Cool, 2nd Stage (Y1, Y2, O) Dual Capacity Units

The second stage compressor will be activated 5 seconds after receiving a “Y2” input as long as the minimum first stage compressor run time of 1 minute has expired. The ECM blower changes to high speed 15 seconds after the “Y2” input (85% of high speed if in dehumidification mode). The Comfort Alert will delay the second stage compressor until 5 seconds after it receives a “Y2” from the board.

Blower (G only)

The blower starts and operates on low speed.

Lockout Conditions

During lockout mode, the appropriate unit and thermostat lockout LEDs will illuminate. The compressor, loop pump, hot water pump, and accessory outputs are de-energized. The blower will continue to run on low speed. If the thermostat calls for heating, emergency heat operation will occur.

Comfort Alert lockouts cannot be reset at the thermostat. All other lockout modes can be reset at the thermostat after turning the unit off, then on, which restores normal operation but keeps the unit lockout LED illuminated. Interruption of power to the unit will reset a lockout without a waiting period and clear all lockout LEDs.

High Pressure

This lockout mode occurs when the normally closed safety switch is opened momentarily (set at 600 PSI).

Low Pressure

This lockout mode occurs when the normally closed low pressure switch is opened for 30 continuous seconds (set at 40 PSI). A low pressure fault may also be indicated when a Comfort Alert lockout has occurred.

Freeze Detection (Water Flow)

This lockout mode occurs when the freeze detection thermistor temperature is at or below the selected point (well 30°F or loop 15°F) for 30 continuous seconds.

IntelliStart

Some models shall be equipped with an optional IntelliStart. IntelliStart is a single phase soft starter which reduces the normal start current (LRA) by 60-70%. This allows the heat pump to more easily go “off grid.” Using IntelliStart will also provide a substantial reduction in light flicker, reduce start-up noise, and improve the compressor’s start behavior. The IntelliStart is self-calibrating and may take several starts to optimize the compressor’s starting characteristics.

Features:

- Automatic adjustment of the compressor starting current to the available supply voltage —maintaining constant starting torque and current.
- Supply line impedance monitoring and compensation.
- Automatic compensation for residual backpressure in the system.
- Monitoring of supply voltage while compressor is running to prevent motor stalling, causing excessive currents, under low voltage conditions.
- Light flicker reductions of up to 10:1 over LRA under the same conditions.

Microprocessor Control cont.

Compressor Monitoring/Comfort Alert

The Comfort Alert displays abnormal compressor conditions through a unique flash code and communicates the conditions to the heat pump microprocessor control. The heat pump microprocessor will determine which fault to act on and ignore. Fault codes 2 (system pressure), 4 (locked rotor), 6 (open start circuit), and 7 (open run circuit) will result in a lockout. All other fault codes are passive. All compressor alerts are displayed on the module by flashing the yellow Alert LED a specific number of times consecutively followed by a pause, and then repeated. The number of consecutive flashes or “Flash Code” correlates to a specific abnormal condition. The red “TRIP” LED means there is a thermostat demand signal “Y” present but the compressor is not running. The green “POWER” LED means the module has power.

Green "POWER" LED - module has power
Red "TRIP" LED - Thermostat "Y" demand signal is present, but the compressor is not running.

Comfort Alert Flash Codes		
Yellow "ALERT" LED	**LED Description**	**Cause**
Flash Code 1	Long Run Time	Not applicable
Flash Code 2	System Pressure Trip	Not applicable
Flash Code 3	Short Cycling	Compressor run time of less than 3 minutes on 4 consecutive cycles
Flash Code 4	Locked Rotor	Four consecutive compressor protector trips indicating compressor won't start
Flash Code 5	Open Circuit	"Y" thermostat demand signal with no compressor current
Flash Code 6	Open Start Circuit	"Y" thermostat demand signal with no current in the start circuit
Flash Code 7	Open Run Circuit	"Y" thermostat demand signal with no current in the run circuit
Flash Code 8	Welded Contactor	Current detected with no "Y" thermostat demand signal present
Flash Code 9	Low Voltage	Less than 17 VAC detected in control circuit

* Flash code number corresponds to a number of LED flashes, followed by a pause and then repeated.
* TRIP and ALERT LEDs flashing at the same time indicates control circuit voltage is too low for operation.
* Reset ALERT flash code by removing 24 VAC power from module.
* Last ALERT flash code is displayed for 1 minute after module is powered on.

Resetting Comfort Alert Codes

Alert codes can be reset manually by cycling power off and on to the Comfort Alert module. Alert codes will reset automatically if conditions return to normal.

Flash Code Number	LED Description	Automatic Reset of Alert Codes
Flash Code 1	Long Run Time	Not applicable
Flash Code 2	System Pressure Trip	Not applicable
Flash Code 3	Short Cycling	Four "alert free" on and off cycles to reset automatically
Flash Code 4	Locked Rotor	Four "alert free" on and off cycles to reset automatically
Flash Code 5	Open Circuit	One "alert free" on and off cycles to reset automatically
Flash Code 6	Open Start Circuit	One "alert free" on and off cycles to reset automatically
Flash Code 7	Open Run Circuit	One "alert free" on and off cycles to reset automatically
Flash Code 8	Welded Contactor	One "alert free" on and off cycles to reset automatically
Flash Code 9	Low Voltage	Resets when voltage rises above 19 VAC

* Reset ALERT flash code by removing 24 VAC power from module.

Microprocessor Control cont.

Thermostat Displays

Fault Flash

When using a TA32W01 or TP32W02 thermostat and SW2-8 is in the pulsing “L” position, FaultFlash will enable a user to view the thermostat and count the fault indicator flashes to determine the lockout condition the unit is experiencing.

ComforTalk

When using a TP32U03, 04 or 05 thermostat and SW2-8 is in the pulsing “L” position, ComforTalk will enable the user to view the thermostat and determine the fault. The thermostat can be configured to show either lockout text or lockout codes.

The LED board on the front of the unit will display all lockouts. The Low Pressure LED will flash for a low pressure condition or a Comfort Alert fault. If the low pressure lockout was caused by Comfort Alert codes 4, 6 or 7, then the Comfort Alert will be flashing. If no Comfort Alert code is visible, then it is a low pressure lockout.

The following tables show the codes that will be displayed on the different ComforTalk and FaultFlash thermostats.

FaultFlash Thermostats

TA32W01 and TP32W02 Thermostats	
Thermostat Display Lockout Code	Lockout Description
2 Flashes	High Pressure Fault
3 Flashes	Low Pressure Fault
4 Flashes	Not Applicable
5 Flashes	Water Flow Fault
6 Flashes	Not Applicable
7 Flashes	Condensate Fault
8 Flashes	Voltage out of Range
9 Flashes	RPM Fault
10 Flashes	Comfort Alert Compressor Module Fault

Lockout code 10 - see Comfort Alert module to determine the specific flash code for compressor abnormalities.

ComforTalk Thermostats

TP32U03, TP32U04 and TP32U05 Thermostats	
Thermostat Display Lockout Code	Lockout Description
"High Pressure" or "E2"	High Pressure Fault
"Low Pressure" or "E3"	Low Pressure Fault
"E4"	Not Applicable
"Water Flow" or "E5"	Water Flow Fault
"E6"	Not Applicable
"Condensate" or "E7"	Condensate Fault
"Voltage Range" or "E8"	Voltage out of Range
"RPM" or "E9"	RPM Fault
"Comfort Alert" or "E10"	Comfort Alert Compressor Module Fault

These thermostats can be configured to display the lockout condition "text" or error number.

* A slow flash of 1 second on and off means the heat pump microprocessor SW2-1 is configured for "Test Mode" or thermostat is miswired.

Lockout code 10 - see Comfort Alert module to determine the specific flash code for compressor abnormalities.

Operation Logic Data

OPERATION LOGIC	HEATING				COOLING		FAN ON	SL1 - IN ON	SL2 - IN ON
	STG1	STG2	STG3	EMERG	STG1	STG2			
SINGLE SPEED UNITS									
Compressor	On	On	On	Off	On	On	-	-	-
Rev Valve	Off	Off	Off	Off	On	On	-	-	-
Loop Pump	On	On	On	Off	On	On	-	On	-
DHW Pump	On	Off	Off	Off	On	On	-	-	-
Secondary 1- Out	On	On	On	Off	On	On	-	-	-
Emerg LED	Off	Off	Off	On	Off	Off	Off	-	-
T-Stat Signal	Y1	Y1, Y2	Y1, Y2, W	W	Y1, O	Y1, Y2, O	G	-	-
DUAL CAPACITY UNITS									
Compressor-Lo	On	Off	Off	Off	On	Off	-	-	-
Compressor-Hi	Off	On	On	Off	Off	On	-	-	-
Rev Valve	Off	Off	Off	Off	On	On	-	-	-
Loop Pump	On	On	On	Off	On	On	-	On	-
DHW Pump	On	On	Off	Off	On	On	-	-	-
Secondary 1- Out	On	On	On	Off	On	On	-	-	-
Secondary 2- Out	Off	On	On	Off	Off	On	-	-	-
Emerg LED	Off	Off	Off	On	Off	Off	-	-	-
T-Stat Signal	Y1	Y1, Y2	Y1, Y2, W	W	Y1, O	Y1, Y2, O	G	-	-

DIP Switch Settings

DIP SWITCH NUMBER		DESCRIPTION	OFF POSITION	ON POSITION
SW1	**N/A**	**NOT USED**	**N/A**	**N/A**
SW2	1	**Service/Test Mode -** Allows control of "NORM" or "TEST" operational modes. Test mode accelerates most timing functions 16 times to allow faster troubleshooting. Test mode also allows viewing the "CURRENT" status of the fault inputs on the LED display.	Test	Norm
	2	**Freeze Detection Temperature Limit (Water Flow)** This lockout mode occurs when the freeze detection thermistor temperature is at or below the selected point (well 30°F or loop 15°F) for 30 continuous seconds.	Loop (Protection 15° F)	Well (Protection 30° F)
	3	**Accessory Relay** Allows field selection of the accessory relay to operate with the compressor or fan.	Fan	Comp
	4	NOT USED	N/A	N/A
	5	NOT USED	N/A	N/A
	6	**Input Diagnostics -** Allows viewing the inputs from the thermostat to the control board such as Y1, Y2, O, G, W, SL1-In on the LED display.	Diagnostic Inputs viewed at LEDs	Normal Display viewed at LEDs
	7	**Output Diagnostics -** Allows viewing the outputs from the control board such as the compressor, reversing valve, blower, hot water pump, and loop pump on the LED display.	Diagnostic Outputs viewed at LEDs	Normal Display viewed at LEDs
	8	**Thermostat Selection** Configures the control for a pulsed lockout signal (ComforTalk and FaultFlash thermostats) or continuous 5 VAC lockout signal.	Pulsed "L" signal	Continuous "L" signal
SW3	1	Single or Dual Capacity Operation	Dual Cap	1 Speed
	2	**Zoned/Finish on Second Stage** This switch allows the unit to down stage with the thermostat when off and finish with second stage when on. Finish on second stage reduces stage changing in reciprocating dual capacity compressors.	Normal - All other systems	Finish on 2nd Unzoned Dual Capacity E-Series or Premier 2 speed
	3	ECM Fan Monitoring - Set for No PRM on split systems	No RPM	RPM
	4	NOT USED	N/A	N/A
	5	On dual capacity units this switch allows stage change: on the fly when off, and 1 minute delay when on. A delay is required on all reciprocating dual capacity units.	Envision	E-Series or Premier

Refrigeration

The Envision series comes with a holding charge. The charge must be adjusted in the field based on performance. Refrigeration piping on the split consists of installing a brazed copper line set between the blower coil unit and the unit's split compressor section. To select the proper tube diameters for the installation, refer to the Line Set Sizes table. Line sets over 60 feet long are not recommended because of oil return and pressure drop problems. The suction line must always be insulated. Handle and route the line sets carefully to avoid kinking or bending the tubes. If the line set is kinked or distorted and it cannot be formed back into its original shape, the bad portion of the pipe should be replaced. A restricted line set will affect the performance of the system.

Fasten the copper line set to the blower coil unit as instructed by the coil installation instructions shown in Figure 14. Nitrogen should be bled through the system at 2 to 3 PSI to prevent oxidation inside the refrigerant tubing. Use a low silver phos-copper braze alloy on all brazed connections.

Braze line set to the service valve stubs on the outside front of the split cabinet as shown in Figure 13. Nitrogen should be bled through the system at 2 to 3 PSI to prevent oxidation contamination. Use a low silver phos-copper braze alloy on all brazed connections. Envision split units are shipped with a factory charge and service valves are not to be opened until the line set has been leak tested, purged and evacuated. Schrader cores should be removed before brazing. A heat sink should be used on the service valves and TXV to prevent damage caused by excessive heat.

Figure 13: Typical Split System Refrigerant Line Connections

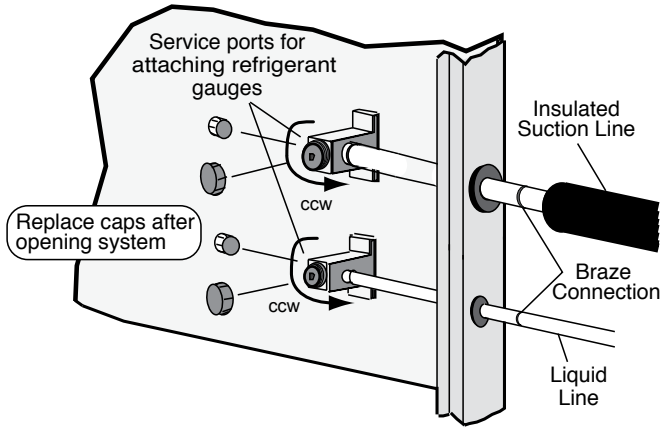

Position	Description	System	Service Port
CW - Full In	Shipping Position	Closed	Open
CCW - Full Out 1/2 turn CW	Service Position	Open	Open
CCW - Full Out	Operation Position	Open	Closed

Figure 14: Attaching the Air Coil

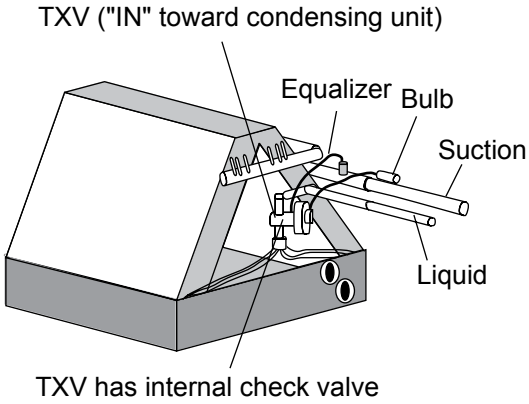

Refrigeration cont.

Leak Testing

The refrigeration line set must be pressurized and checked for leaks before purging and charging the unit. To pressurize the line set, attach refrigerant gauges to the service ports and add an inert gas (nitrogen or dry carbon dioxide) until pressure reaches 60 to 90 PSIG. Never use oxygen or acetylene to pressure test. Use an electronic leak detector or a good quality bubble solution to detect leaks on all connections made in the field. Check the service valve ports and stem for leaks and all connections made in the field. If a leak is found, repair it and repeat the above steps. For safety reasons do not pressurize the system above 150 psi. Purge pressure from line set. The system is now ready for evacuating and charging.

System Evacuation

Ensure that the line set and air coil are evacuated before opening service valves to the split unit. The line set must be evacuated to at least 200 microns to remove the moisture and air that may still be in the line set and coil. Evacuate the system through both service ports to prevent false readings on the gauge because of pressure drop through service ports.

Charge Amount When Using NAH Air Handler

The Envision Split is shipped with a factory pre-charge. This volume of refrigerant is not sufficient to run the system and additional refrigerant must be added. If using an NAH Air Handler please refer to the Line Set Sizes table for charge amounts to be added. The “Factory Charge” column is the charge amount the compressor section/split is shipped with from the factory. The “Charge Amount with NAH Air Handler” column is the total amount of charge for the NAH Air Handler + Compressor section/split. This column does not factor in additional refrigerant needed for the line set. The installer of the system must add charge appropriately for the specific length of the line set. A 3/8 in. liquid line is calculated at 0.50 oz. of charge per linear foot, and a 1/2 in. liquid line is calculated at 1.0 oz. of charge per linear foot using R-410A refrigerant. The suction line will not hold “liquid” and should be ignored for the charge calculation.

Example: NSZ036/NAH036 with 20 ft. of 3/8 in. liquid line. Remember that when using the NAH Air Handler, the column “Charge Amount with NAH Air Handler” will be used. Now calculate for the additional 20 ft. line set.
Additional refrigerant to be added = (20 ft. x 0.5 oz.)
= 10 oz.

Solution: 10 oz. should be added to the recommended charge of 86 oz. found in the “Charge Amount with NAH Air Handler” column for a total charge of 96 oz.

After initial charge, the system should be operated and the system subcooling and superheat verified to the Unit Operating Parameters table.

If an air handler manufactured by others is used then refrigerant should be added to the Envision Split factory pre-charge. Refrigerant should be added for liquid line length. This should result in a slightly under-charged system exhibiting low subcooling and high superheat. As charge is added, the subcooling should rise and the superheat should fall.

Charging the System

Charge Method – After purging and evacuating the line set, fully open the service valves counterclockwise. Add R-410A (liquid) into the liquid line service port until the pressure in the system reaches approximately 200 PSIG. Never add liquid refrigerant into the suction side of a compressor. Start the unit and measure superheat and subcooling. Keep adding refrigerant until the unit meets the superheat and subcooling values on the Operating Parameters tables.

Checking Superheat and Subcooling

Determining Superheat

1. Measure the temperature of the suction line at the point where the expansion valve bulb is clamped.
2. Determine the suction pressure in the suction line by attaching refrigeration gauges to the Schrader connection on the suction side of the compressor.
3. Convert the pressure obtained in Step 2 to the saturation temperature by using the R-410A Pressure/Temperature Conversion Chart.
4. Subtract the temperature obtained in Step 3 from Step 1. The difference is the amount of superheat for the unit. Refer to the Operating Parameters tables for superheat ranges at specific entering water conditions.

Superheat Adjustment

TXVs are factory set to a specific superheat; however, the superheat should be adjusted for the application. To adjust the TXV to other superheat settings:

1. Remove the seal cap from the bottom of the valve.
2. Turn the adjustment screw clockwise to increase superheat and counterclockwise to decrease superheat. One complete 360° turn changes the superheat approximately 3-4°F, regardless of refrigerant type. You may need to allow as much as 30 minutes after the adjustment is made for the system to stabilize.
3. Once the proper superheat setting has been achieved, replace and tighten the seal cap.

Refrigeration cont.

WARNING: There are 8 total (360°) turns on the superheat adjustment stem from wide open to fully closed. When adjusting the superheat stem clockwise (superheat increase) and the stop is reached, any further clockwise turning adjustment will damage the valve.

Determining Subcooling

1. Measure the temperature of the liquid line on the small refrigerant line (liquid line) just outside the split cabinet. This location will be adequate for measurement in both modes unless a significant temperature drop in the liquid line is anticipated.
2. Measure the liquid line pressure by attaching refrigerant gauges to the Schrader connection on the liquid line service valve.
3. Convert the pressure obtained in Step 2 to the saturation temperature by using the R-410A Pressure/ Temperature Conversion Chart.
4. Subtract the temperature in Step 1 from the temperature in Step 3. The difference will be the subcooling value for that unit. Refer to the Operating Parameters tables for subcooling ranges at specific enter water conditions.

Line Set Sizes

Unit Size	Air Handler	20 feet		40 feet		60 feet		Factory Charge (oz.)	*Charge Amount with NAH Air Handler (oz.)
		Suction	Liquid	Suction	Liquid	Suction	Liquid		
022	NAH022	5/8” OD	3/8” OD	5/8” OD	3/8” OD	3/4” OD	3/8” OD	56	78
030	NAH030	5/8” OD	3/8” OD	3/4” OD	3/8” OD	3/4” OD	3/8” OD	56	78
036	NAH036	5/8” OD	3/8” OD	3/4” OD	3/8” OD	3/4” OD	1/2” OD	56	86
042	NAH042	3/4” OD	3/8” OD	3/4” OD	3/8” OD	7/8” OD	1/2” OD	74	99
048	NAH048	3/4” OD	3/8” OD	7/8” OD	3/8” OD	7/8” OD	1/2” OD	90	115
060	NAH060	7/8” OD	1/2” OD	7/8” OD	1/2” OD	1-1/8” OD	1/2” OD	92	112
070	NAH060	7/8” OD	1/2” OD	7/8” OD	1/2” OD	1-1/8” OD	1/2” OD	108	132
026	NAH026	5/8” OD	3/8” OD	3/4” OD	3/8” OD	3/4” OD	1/2” OD	52	74
038	NAH036	3/4” OD	3/8” OD	3/4” OD	3/8” OD	3/4” OD	1/2” OD	56	86
049	NAH048	3/4” OD	3/8” OD	7/8” OD	3/8” OD	7/8” OD	1/2” OD	90	115
064	NAH060	7/8” OD	1/2” OD	7/8” OD	1/2” OD	1-1/8” OD	1/2” OD	92	112
072	NAH060	7/8” OD	1/2” OD	7/8” OD	1/2” OD	1-1/8” OD	1/2” OD	104	132

NOTES: * The "Charge Amount with NAH Air Handler" column is based on the charge amount for a NAH Air Handler+Compressor Section/Split. 4/6/10
Additional charge will have to be added accordingly for line set length.
After Charge is added adjustments can be made to get appropriate subcooling and superheat.
Additional charge for R-410A is 0.50 oz. per ft. for 3/8 in. and 1.0 oz. per ft. for 1/2 in. tube.
Longer line sets will significantly reduce capacity and efficiency of the system as well as adversely effect the system reliability due to poor oil return.

Pressure/Temperature Conversion Chart for R-410A

PRESSURE (PSIG)	TEMP °F
60	8.5
62	9.9
64	11.2
66	12.5
68	13.8
70	15.1
72	16.3
74	17.5
76	18.7
78	19.8
80	21.0
82	22.1
84	23.2
86	24.3
88	25.4
90	26.5
92	27.5
94	28.6
96	29.6
98	30.6
100	31.6
102	32.6
104	33.5
106	34.5
108	35.4
110	36.4
112	37.3
114	38.2
116	39.1
118	40.0
120	40.9
122	41.7
124	42.6
126	43.4
128	44.3
130	45.1
132	45.9
134	46.7
136	47.5
138	48.3
140	49.1
142	49.9
144	50.7
146	51.5
148	52.2
150	53.0
152	53.7
154	54.5
156	55.2
158	55.9
160	56.6
162	57.4
164	58.1
166	58.8
168	59.5
170	60.2
172	60.8
174	61.5
176	62.2
178	62.9

PRESSURE (PSIG)	TEMP °F
180	63.5
182	64.2
184	64.8
186	65.5
188	66.1
190	66.8
192	67.4
194	68.0
196	68.7
198	69.3
200	69.9
202	70.5
204	71.1
206	71.7
208	72.3
210	72.9
212	73.5
214	74.1
216	74.7
218	75.3
220	75.8
222	76.4
224	77.0
226	77.5
228	78.1
230	78.7
232	79.2
234	79.8
236	80.3
238	80.9
240	81.4
242	81.9
244	82.5
246	83.0
248	83.5
250	84.1
252	84.6
254	85.1
256	85.6
258	86.1
260	86.6
262	87.1
264	87.7
266	88.2
268	88.7
270	89.2
272	89.6
274	90.1
276	90.6
278	91.1
280	91.6
282	92.1
284	92.6
286	93.0
288	93.5
290	94.0
292	94.5
294	94.9
296	95.4
298	95.8

PRESSURE (PSIG)	TEMP °F
300	96.3
302	96.8
304	97.2
306	97.7
308	98.1
310	98.6
312	99.0
314	99.5
316	99.9
318	100.4
320	100.8
322	101.2
324	101.7
326	102.1
328	102.5
330	103.0
332	103.4
334	103.8
336	104.2
338	104.7
340	105.1
342	105.5
344	105.9
346	106.3
348	106.7
350	107.2
352	107.6
354	108.0
356	108.4
358	108.8
360	109.2
362	109.6
364	110.0
366	110.4
368	110.8
370	111.2
372	111.6
374	112.0
376	112.3
378	112.7
380	113.1
382	113.5
384	113.9
386	114.3
388	114.7
390	115.0
392	115.4
394	115.8
396	116.2
398	116.5
400	116.9
402	117.3
404	117.6
406	118.0
408	118.4
410	118.7
412	119.1
414	119.5
416	119.8
418	120.2

PRESSURE (PSIG)	TEMP °F
420	120.6
422	120.9
424	121.3
426	121.6
428	122.0
430	122.3
432	122.7
434	123.0
436	123.4
438	123.7
440	124.1
442	124.4
444	124.8
446	125.1
448	125.4
450	125.8
452	126.1
454	126.5
456	126.8
458	127.1
460	127.5
462	127.8
464	128.1
466	128.5
468	128.8
470	129.1
472	129.4
474	129.8
476	130.1
478	130.4
480	130.7
482	131.1
484	131.4
486	131.7
488	132.0
490	132.3
492	132.7
494	133.0
496	133.3
498	133.6
500	133.9
502	134.2
504	134.5
506	134.9
508	135.2
510	135.5
512	135.8
514	136.1
516	136.4
518	136.7
520	137.0
522	137.3
524	137.6
526	137.9
528	138.2
530	138.5
532	138.8
534	139.1
536	139.4
538	139.7

PRESSURE (PSIG)	TEMP °F
540	140.0
542	140.3
544	140.6
546	140.9
548	141.2
550	141.4
552	141.7
554	142.0
556	142.3
558	142.6
560	142.9
562	143.2
564	143.5
566	143.7
568	144.0
570	144.3
572	144.6
574	144.9
576	145.1
578	145.4
580	145.7
582	146.0
584	146.2
586	146.5
588	146.8
590	147.1
592	147.3
594	147.6
596	147.9
598	148.2
600	148.4
602	148.7
604	149.0
606	149.2
608	149.5

Thermistor Resistance

Thermistor Temperature (°F)	Resistance in Ohms
78.5	9230 -10007
77.5	9460 - 10032
76.5	9690 - 10580
75.5	9930 - 10840
33.5	30490 - 32080
32.5	31370 - 33010
31.5	32270 - 33690
30.5	33190 - 34940
1.5	79110 - 83750
0.5	81860 - 86460
0.0	82960 - 87860

Operating Parameters

Single Speed Models - NSZ022 thru NSZ070 (with NAH Series Air Handler)

Cooling -- No Hot Water Generator									
Entering Water Temp °F	Water Flow GPM/Ton	NSZ022 thru NSZ060		NSZ070		NSZ022 thru NSZ070			
		Suction Pressure PSIG	Discharge Pressure PSIG	Suction Pressure PSIG	Discharge Pressure PSIG	Superheat	Subcooling	Water Temp Rise °F	Air Temp Drop °F DB
50	1.5	115-150	205-245	115-130	205-245	12-22	7-14	5-22	18-24
	3.0	110-145	200-235	110-125	200-235	14-26	6-12	8-12	18-24
70	1.5	125-160	260-300	125-160	275-300	8-14	8-12	5-19	18-22
	3.0	115-150	265-295	115-135	265-295	9-16	4-16	5-12	18-22
90	1.5	125-160	320-370	125-160	330-370	8-14	6-13	14-22	18-22
	3.0	120-150	305-355	120-150	325-365	9-16	4-16	5-12	18-22

Heating -- No Hot Water Generator									
Entering Water Temp °F	Water Flow GPM/Ton	NSZ022 thru NSZ060		NSZ070		NSZ022 thru NSZ070			
		Suction Pressure PSIG	Discharge Pressure PSIG	Suction Pressure PSIG	Discharge Pressure PSIG	Superheat	Subcooling	Water Temp Drop °F	Air Temp Rise °F DB
30	1.5	65-85	290-310	65-85	330-360	7-13	2-21	7-10	18-24
	3.0	70-90	265-330	70-90	335-365	6-12	2-21	3-7	22-26
50	1.5	95-120	320-345	95-120	395-430	6-12	2-21	5-11	21-34
	3.0	100-125	280-365	100-125	375-405	6-12	4-22	5-11	24-33
70	1.5	135-155	315-380	135-155	435-485	8-14	10-20	8-14	26-46
	3.0	135-156	315-395	135-155	440-490	8-14	10-20	3-10	25-48

NOTES: Cooling performance based on entering air temperatures of 80°F DB, 67°F WB.
Heating performance based on entering air temperatures of 70°DB.

5/29/08

Operating Parameters cont.

NDZ026 thru NDZ072 (with NAH Series Air Handler)

First Stage Operation

Cooling -- No Hot Water Generator									
Entering Water Temp °F	Water Flow GPM/Ton	NDZ026 thru NDZ064		NDZ072		NDZ026 thru NDZ072			
		Suction Pressure PSIG	Discharge Pressure PSIG	Suction Pressure PSIG	Discharge Pressure PSIG	Superheat	Subcooling	Water Temp Rise °F	Air Temp Drop °F DB
50	1.5	130-150	193-230	130-150	200-245	8-16	7-14	7-20	18-24
	3.0	128-153	190-230	125-140	205-240	8-16	3-10	9-14	18-25
70	1.5	130-150	238-282	135-150	240-280	6-16	4-16	9-18	18-25
	3.0	130-155	238-262	125-145	245-270	6-18	5-11	5-10	18-24
90	1.5	133-148	308-340	130-155	300-365	7-16	6-18	4-11	19-25
	3.0	138-153	303-333	130-165	305-350	7-18	7-14	5-9	17-22

Heating -- No Hot Water Generator									
Entering Water Temp °F	Water Flow GPM/Ton	NDZ026 thru NDZ064		NDZ072		NDZ026 thru NDZ072			
		Suction Pressure PSIG	Discharge Pressure PSIG	Suction Pressure PSIG	Discharge Pressure PSIG	Superheat	Subcooling	Water Temp Drop °F	Air Temp Rise °F DB
30	1.5	78-100	275-325	85-105	325-385	6-11	4-16	2-8	20-29
	3.0	78-110	285-325	90-120	335-375	6-11	4-16	3-7	20-32
50	1.5	105-120	305-350	100-130	340-400	5-12	4-16	5-12	24-32
	3.0	110-125	305-355	110-125	345-395	9-15	2-14	4-9	20-34
70	1.5	140-155	305-355	130-165	370-430	5-12	2-14	8-12	24-39
	3.0	145-160	330-360	140-160	375-425	7-17	7-15	4-9	24-39

Second Stage Operation

Cooling -- No Hot Water Generator									
Entering Water Temp °F	Water Flow GPM/Ton	NDZ026 thru NDZ064		NDZ072		NDZ026 thru NDZ072			
		Suction Pressure PSIG	Discharge Pressure PSIG	Suction Pressure PSIG	Discharge Pressure PSIG	Superheat	Subcooling	Water Temp Rise °F	Air Temp Drop °F DB
50	1.5	120-140	200-245	105-150	210-270	7-17	6-14	7-16	19-26
	3.0	115-140	195-290	110-130	215-260	7-15	4-11	8-12	20-24
70	1.5	121-136	265-310	105-150	280-350	9-15	6-18	7-15	19-25
	3.0	123-139	265-310	110-140	285-320	10-16	8-16	8-12	18-24
90	1.5	122-140	310-360	115-140	325-385	8-14	6-18	10-16	18-24
	3.0	123-139	310-350	120-135	330-355	8-14	7-15	8-12	17-23

Heating -- No Hot Water Generator									
Entering Water Temp °F	Water Flow GPM/Ton	NDZ026 thru NDZ064		NDZ072		NDZ026 thru NDZ072			
		Suction Pressure PSIG	Discharge Pressure PSIG	Suction Pressure PSIG	Discharge Pressure PSIG	Superheat	Subcooling	Water Temp Drop °F	Air Temp Rise °F DB
30	1.5	72-89	295-350	70-100	320-370	7-18	10-20	4-13	18-24
	3.0	73-87	305-330	75-90	315-365	7-18	10-20	4-16	18-27
50	1.5	100-120	320-365	95-130	375-430	6-14	6-18	4-10	23-34
	3.0	105-120	355-365	100-125	370-420	6-14	6-18	4-9	20-37
70	1.5	142-158	360-380	130-165	400-470	6-12	4-15	6-15	28-38
	3.0	138-152	365-390	135-160	405-465	7-14	4-15	6-12	24-42

NOTES: Cooling performance based on entering air temperatures of 80°F DB, 67°F WB.
Heating performance based on entering air temperatures of 70°DB.

5/29/08

Pressure Drop and Recommended Flow Rates

Single Speed

Model	GPM	Pressure Drop (psi)				
		30°F	50°F	70°F	90°F	110°F
022	3	0.9	0.9	0.8	0.7	0.7
	4.5	1.7	1.6	1.5	1.4	1.3
	6	2.8	2.7	2.5	2.3	2.2
	8	4.7	4.4	4.1	3.9	3.6
030	4	1.5	1.4	1.3	1.2	1.1
	6	3.0	2.8	2.7	2.5	2.3
	8	5.1	4.8	4.5	4.2	3.9
	10	7.7	7.2	6.8	6.3	5.8
036	5	1.0	1.0	0.9	0.8	0.8
	7	2.1	1.9	1.8	1.7	1.6
	9	3.6	3.3	3.0	2.8	2.6
	12	6.3	5.9	5.5	5.1	4.8
042	5	0.8	0.7	0.7	0.7	0.6
	8	2.1	2.1	1.9	1.8	1.7
	11	4.2	4.1	3.8	3.5	3.3
	14	7.6	6.7	6.3	5.8	5.4
048	6	1.1	1.0	1.0	0.9	0.8
	9	2.3	2.1	2.0	1.9	1.7
	12	3.9	3.7	3.4	3.2	3.0
	16	6.7	6.3	5.9	5.5	5.1
060	9	2.4	2.2	2.1	2.0	1.8
	12	3.9	3.6	3.4	3.2	2.9
	15	5.7	5.3	5.0	4.7	4.3
	20	9.5	8.9	8.3	7.8	7.2
070	12	3.0	2.8	2.6	2.4	2.2
	15	4.4	4.0	3.8	3.5	3.3
	18	6.0	5.5	5.1	4.8	4.4
	24	9.7	9.1	8.5	7.9	7.3

5/30/06

Dual Capacity

Model	GPM	Pressure Drop (psi)				
		30°F	50°F	70°F	90°F	110°F
026 full load	4	1.4	1.3	1.2	1.1	1.0
	6	2.8	2.6	2.4	2.3	2.1
	8	4.7	4.4	4.1	3.8	3.5
	10	7.0	6.6	6.2	5.8	5.3
026 part load	3	0.8	0.7	0.7	0.7	0.6
	5	2.0	1.8	1.7	1.6	1.5
	7	3.6	3.4	3.2	3.0	2.8
	9	5.8	5.5	5.1	4.8	4.4
038 full load	5	1.2	1.2	1.1	1.0	1.0
	7	2.2	2.1	1.9	1.8	1.7
	9	3.4	3.2	3.0	2.8	2.6
	11	4.9	4.6	4.3	4	3.7
038 part load	4	0.9	0.8	0.8	0.7	0.7
	6	1.7	1.6	1.5	1.4	1.3
	8	2.8	2.6	2.5	2.3	2.1
	10	4.2	3.9	3.7	3.4	3.2
049 full load	6	1.2	1.2	1.1	1.0	1.0
	9	2.4	2.2	2.1	2.0	1.8
	12	3.9	3.6	3.4	3.2	2.9
	15	5.7	5.3	5	4.7	4.3
049 part load	5	0.9	0.9	0.8	0.8	0.7
	8	2.0	1.8	1.7	1.6	1.5
	11	3.4	3.1	2.9	2.8	2.5
	14	5.0	4.7	4.4	4.1	3.8
064 full load	8	1.8	1.7	1.6	1.4	1.3
	12	3.8	3.5	3.3	3.0	2.8
	16	6.5	6.0	5.6	5.2	4.8
	20	9.7	9.1	8.5	8.0	7.4
064 part load	6	1.0	0.9	0.9	0.8	0.8
	10	2.6	2.5	2.3	2.1	2.0
	14	5.0	4.7	4.4	4.1	3.8
	18	8.1	7.6	7.1	6.6	6.1
072 full load	12	3.2	3.0	2.8	2.6	2.4
	15	4.5	4.2	4.0	3.7	3.4
	18	6.0	5.7	5.3	4.9	4.6
	21	7.8	7.3	6.8	6.4	5.9
072 part load	10	2.3	2.1	2.0	1.9	1.7
	13	3.6	3.3	3.0	2.8	2.6
	16	5.0	4.6	4.3	4.0	3.7
	19	6.5	6.2	5.8	5.4	5.0

5/30/06

Unit Startup

Before Powering Unit, Check The Following:

- High voltage is correct and matches nameplate.
- Fuses, breakers and wire size correct.
- Low voltage wiring complete.
- Piping completed and water system cleaned and flushed.
- Air is purged from closed loop system.
- Isolation valves are open, water control valves or loop pumps wired.
- Condensate line open and correctly pitched.
- Transformer switched to 208V if applicable.
- DIP switches are set correctly.
- DHW pump switch is "OFF" unless piping is completed and air has been purged.
- Blower rotates freely.
- Blower speed correct.
- Air filter/cleaner is clean and in position.
- Service/access panels are in place.
- Return air temperature is between 50-80°F heating and 60-95°F cooling.
- Check air coil cleanliness to insure optimum performance. Clean as needed according to maintenance guidelines. To obtain maximum performance the air coil should be cleaned before startup. A 10-percent solution of dishwasher detergent and water is recommended for both sides of coil, a thorough water rinse should follow.

Startup Steps

NOTES: Complete the Equipment Start-Up/Commissioning Check Sheet during this procedure. Refer to thermostat operating instructions and complete the startup procedure.

1. Initiate a control signal to energize the blower motor. Check blower operation.
2. Initiate a control signal to place the unit in the cooling mode. Cooling setpoint must be set below room temperature.
3. First stage cooling will energize after a time delay.
4. Be sure that the compressor and water control valve or loop pump(s) are activated.
5. Verify that the water flow rate is correct by measuring the pressure drop through the heat exchanger using the P/T plugs and comparing to unit capacity data in specification catalog.
6. Check the temperature of both the supply and discharge water (see Operating Parameters tables).
7. Check for an air temperature drop of 15°F to 25°F across the air coil, depending on the fan speed and entering water temperature.
8. Decrease the cooling set point several degrees and verify high-speed blower operation.
9. Adjust the cooling setpoint above the room temperature and verify that the compressor and water valve or loop pumps deactivate.
10. Initiate a control signal to place the unit in the heating mode. Heating set point must be set above room temperature.
11. First stage heating will energize after a time delay.
12. Check the temperature of both the supply and discharge water (see Operating Parameters tables).
13. Check for an air temperature rise of 20°F to 35°F across the air coil, depending on the fan speed and entering water temperature.
14. If auxiliary electric heaters are installed, increase the heating setpoint until the electric heat banks are sequenced on. All stages of the auxiliary heater should be sequenced on when the thermostat is in the Emergency Heat mode. Check amperage of each element.
15. Adjust the heating setpoint below room temperature and verify that the compressor and water valve or loop pumps deactivate.
16. During all testing, check for excessive vibration, noise or water leaks. Correct or repair as required.
17. Set system to desired normal operating mode and set temperature to maintain desired comfort level.
18. Instruct the owner/operator in the proper operation of the thermostat and system maintenance.

NOTES: Be certain to fill out and forward all warranty registration papers.

Final Evaluation

After the initial check of superheat/subcooling values in the heating mode, shut off the unit and allow it to sit 3 to 5 minutes until pressures equalize. Restart the unit in the cooling mode and check the values against those in the Operating Parameters tables. If the unit performs satisfactorily, charging is complete. If the unit does not perform to specifications, the charge may need to be readjusted until the values are close. Adding refrigerant will increase subcooling. Recovering some of the refrigerant will decrease subcooling and increase superheat. If the superheat/subcooling values are still not close to the specifications in the Operating Parameters tables, analyze refrigerant circuit operation.

Unit Startup/Troubleshooting

Heating Cycle Analysis

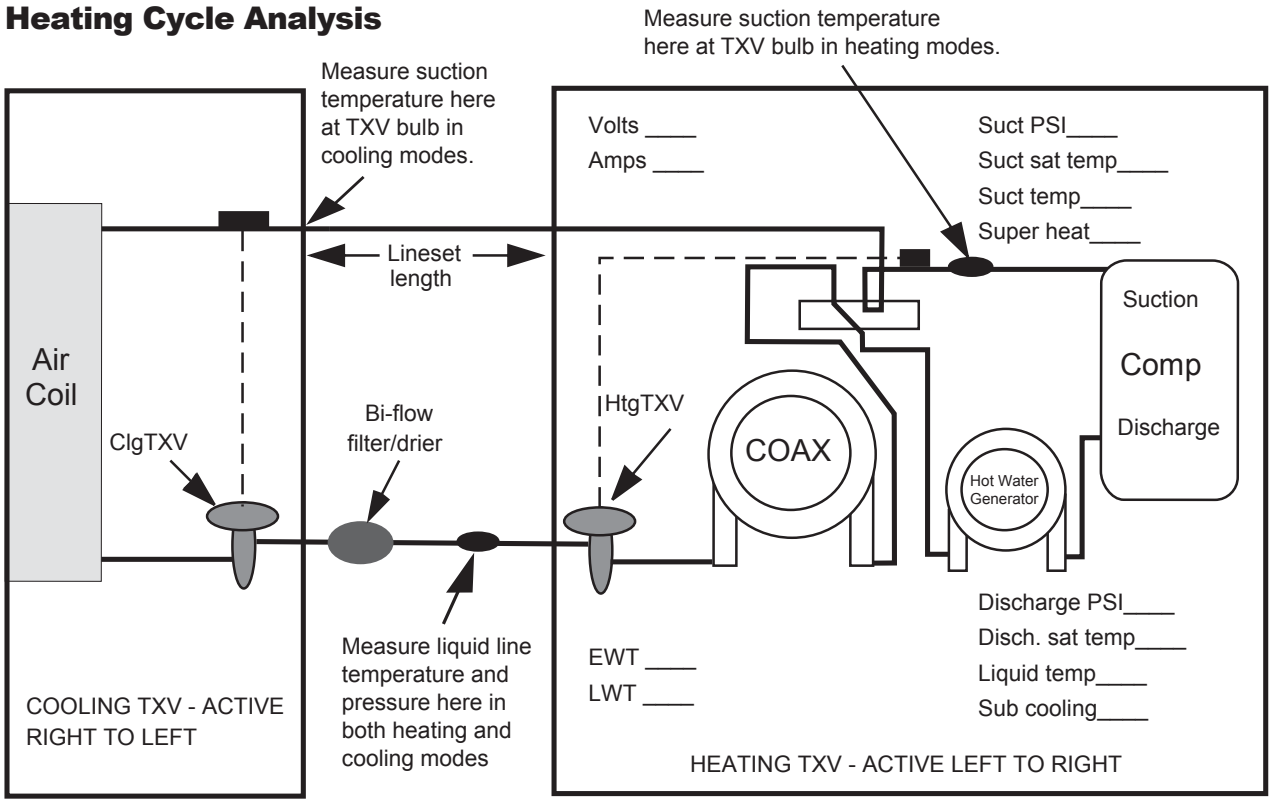

Heat of Extraction/Rejection = GPM x 500 (485 for water/antifreeze) x ∆T

Note: DO NOT hook up pressure gauges unless there appears to be a performance problem.

Cooling Cycle Analysis

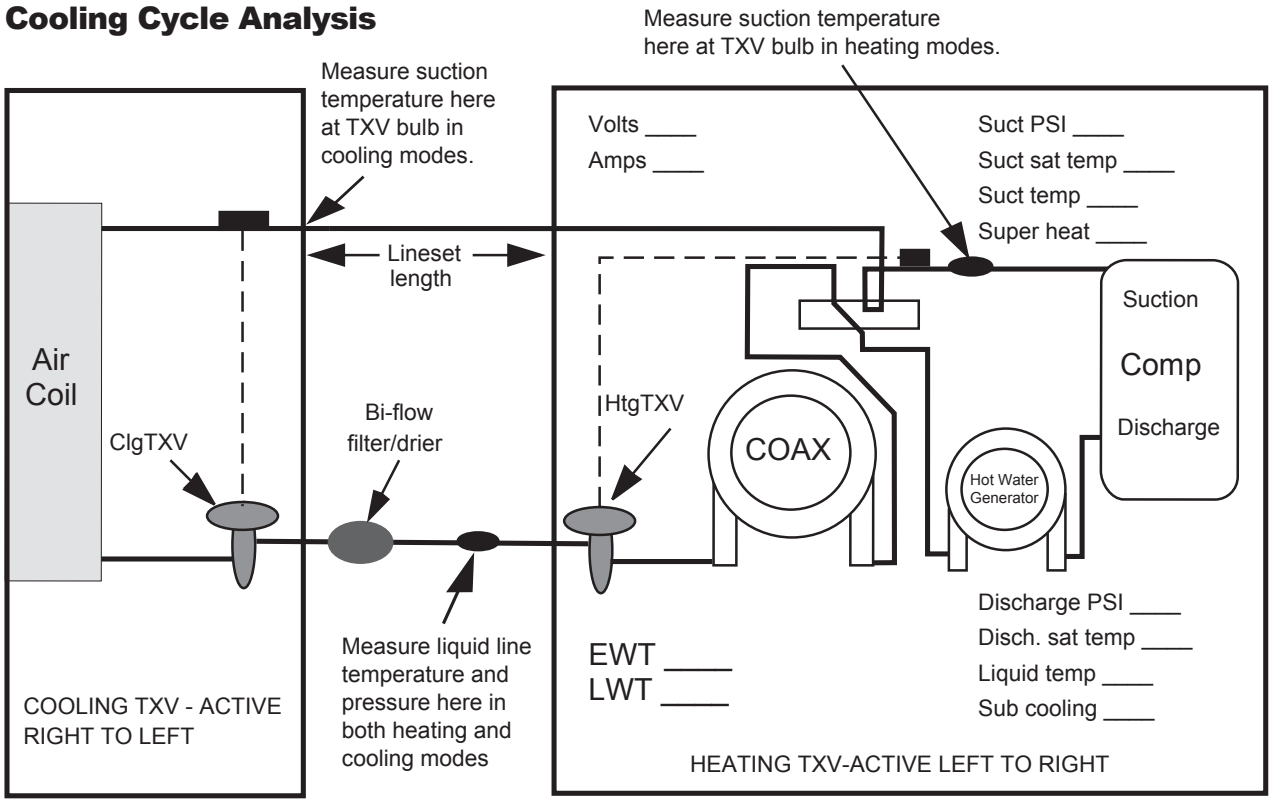

Troubleshooting

Standard Microprocessor Controls

To check the unit control board for proper operation:

1. Disconnect thermostat wires at the control board.
2. Jumper the desired test input (Y1, Y2, W, O or G) to the R terminal to simulate a thermostat signal.
3. If control functions properly:
   - Check for thermostat and field control wiring (use the diagnostic inputs mode).
4. If control responds improperly:
   - Ensure that component being controlled is functioning (compressor, blower, reversing valve, etc.).
   - Ensure that wiring from control to the component is functioning (refer to the LED Definition table below and use the diagnostic outputs mode).
   - If steps above check properly, replace unit control.

LED Definitions and Diagnostics

Standard Microprocessor

LED	NORMAL DISPLAY MODE		DIAGNOSTIC MODES							
			CURRENT FAULT STATUS		INPUTS		OUTPUTS 1		OUTPUTS 2	
	Field Selection DIPS									
	SW2-	1 On	SW2-	1 Off	SW2-	1 NA	SW2-	1 NA	SW2-	1 NA
	SW2-	6 On	SW2-	6 On	SW2-	6 Off	SW2-	6 On	SW2-	6 Off
	SW2-	7 On	SW2-	7 On	SW2-	7 On	SW2-	7 Off	SW2-	7 Off
Drain	Drain Pan Overflow Lockout		Drain Pan Overflow		Y1		Compressor (On or Low)		Blower Low	
Water Flow	FD Thermistor (Loop <15° F, Well<30°F) Lockout		FD Thermistor (Loop <15° F, Well<30°F)		Y2		Compressor (On or High)		Blower Medium	
High Pressure	High Pressure >600 PSI Lockout		High Pressure >600		O		Reversing Valve		Blower High	
Low Pressure, Current Sensor	Low Pressure <40		Low Pressure <40		G		Fan		Aux Heat 1	
Airflow	ECM2 RPM <100 RPM		ECM2 RPM <100 RPM		W		DHW Pump		Aux Heat 2	
Status	Microprocessor Malfunction		Not Used		SL1		Loop Pump 1		Aux Heat 3	
DHW Limit	HWL Thermistor >130°F		HWL Thermistor >130°F		Not Used		Loop Pump 2		Aux Heat 4	
DHW Off	DHW Pump Switch Off		DHW Pump Switch Off		–		–		–	

Refrigerant Systems

To maintain sealed circuit integrity, do not install service gauges unless unit operation appears abnormal. Compare the change in temperature on the air side as well as the water side to the Operating Parameters tables. If the unit's performance is not within the ranges listed, and the airflow and water flow are known to be correct, gauges should then be installed and superheat and subcooling numbers calculated. If superheat and subcooling are outside recommended ranges, an adjustment to the refrigerant charge may be necessary.

NOTES: Refrigerant tests must be made with hot water generator turned "OFF". Verify that air and water flow rates are at proper levels before servicing the refrigerant circuit.

Preventative Maintenance

Water Coil Maintenance

1. Keep all air out of the water. An open loop system should be checked to ensure that the well head is not allowing air to infiltrate the water line. Lines should always be airtight.
2. Keep the system under pressure at all times. It is recommended in open loop systems that the water control valve be placed in the discharge line to prevent loss of pressure during off cycles. Closed loop systems must have positive static pressure.

NOTES: On open loop systems, if the installation is in an area with a known high mineral content (125 PPM or greater) in the water, it is best to establish with the owner a periodic maintenance schedule so the coil can be checked regularly. Should periodic coil cleaning be necessary, use standard coil cleaning procedures which are compatible with either the cupronickel or copper water lines. Generally, the more water flowing through the unit the less chance for scaling.

Other Maintenance

Filters

Filters must be clean to obtain maximum performance. They should be inspected monthly under normal operating conditions and be replaced when necessary. Units should never be operated without a filter.

Condensate Drain

In areas where airborne bacteria produce a slime in the drain pan, it may be necessary to treat chemically to minimize the problem. The condensate drain can pick up lint and dirt, especially with dirty filters. Inspect twice a year to avoid the possibility of overflow.

Blower Motors

Blower motors on most air handlers are equipped with sealed ball bearings and require no periodic oiling.

Hot Water Generator Coil

See Water Coil Maintenance section above.

Air Coil

The air coil must be cleaned to obtain maximum performance. Check once a year under normal operating conditions and, if dirty, brush or vacuum clean. Care must be taken not to damage the aluminum fins while cleaning.

CAUTION: Fin edges are sharp.

Replacement Procedures

Obtaining Parts

When ordering service or replacement parts, refer to the model number and serial number of the unit as stamped on the serial plate attached to the unit. If replacement parts are required, mention the date of installation of the unit and the date of failure, along with an explanation of the malfunctions and a description of the replacement parts required.

In-Warranty Material Return

Material may not be returned except by permission of authorized warranty personnel. Contact your local distributor for warranty return authorization and assistance.

Service Parts List

		Single Speed Split Units							Dual Capacity Split Units				
		022	030	036	042	048	060	070	026	038	049	064	072
Compressor	Compressor	34P581-01	34P582-01	34P583-01	34P578-01	34P579-01	34P580-01	34P561-05	34P585-01	34P573-01	34P574-01	34P575-01	34P586-01
	Run Capacitor	16P002-18	16P002-20		16P002-21		16P002-25	16P002-24	16P002-19	16P002-20	16P002-21	16P002-24	
	Sound Jacket	92P504A05				92P504A16			92P504A16				
	Power Harness	11P781-01							11P781-01				
	Solenoid Harness	N/A							11P782-01				
Refrigeration Components	Accumulator	36P509-02		36P509-01					36P509-02	36P509-01			
	Coax	62P504C01	62P541B01	62P542B01		62P543B01		62P555-01	62P504C01	62P542B01	62P543B01		62P555-01
	TXV	33P609-01		33P609-03	33P609-05		33P609-06		33P609-01	33P609-03	33P609-05	33P609-06	
	Reversing Valve	33P506-04		33P503-05		33P526-04			33P506-04	33P503-05	33P526-04		
	Filter Dryer	36P500B01					36P500B02		36P500B01			36P500B02	
Hot Water Generator	Hot Water Generator	62P516-05			62P516-03				62P516-05		62P516-03		
	Hot Water Generator Pump	24P501-02							24P501-02				
Electrical	Comfort Alert	19P571-01							19P571-02				
	Contactor	13P004A03							13P004A03				
	Transformer	15P501B01							15P501B01				
	3 Pole Power Block	12P503-06							12P503-06				
	2 Pole Screw Term. Block	12P500A01							12P500A01				
	Status Light Board	17P503-02							17P503-02				
	Harness, Status Light Board	11P783-01							11P783-01				
	Premier Board	17P513-07							17P513-07				
Sensors & Safeties	Freeze Detection Thermistor	12P505B03							12P505B03				
	HWL Thermistor	12P505B02							12P505B02				
	High Pressure Switch	35P506B02							35P506B02				
	Low Pressure Switch	35P506B01							35P506B01				

Part numbers subject to change 6/12/06

Manufactured by
WaterFurnace International, Inc.
9000 Conservation Way
Fort Wayne, IN 46809
www.waterfurnace.com

Product:	**Envision Series NSZ/NDZ**
Type:	Geothermal/Water Source Indoor Split Heat Pump
Size:	2-6 Ton Single Speed
	2-6 Ton Dual Capacity
Document:	Installation Manual

IM1003SN 08/10

©2010 WaterFurnace International, Inc., 9000 Conservation Way, Fort Wayne, IN 46809-9794. WaterFurnace has a policy of continual product research and development and reserves the right to change design and specifications without notice.