Air Hammer
Item No : SC-211C / SC-221C

● The consumable parts ▲ The replacement parts ★ The non-replacement parts

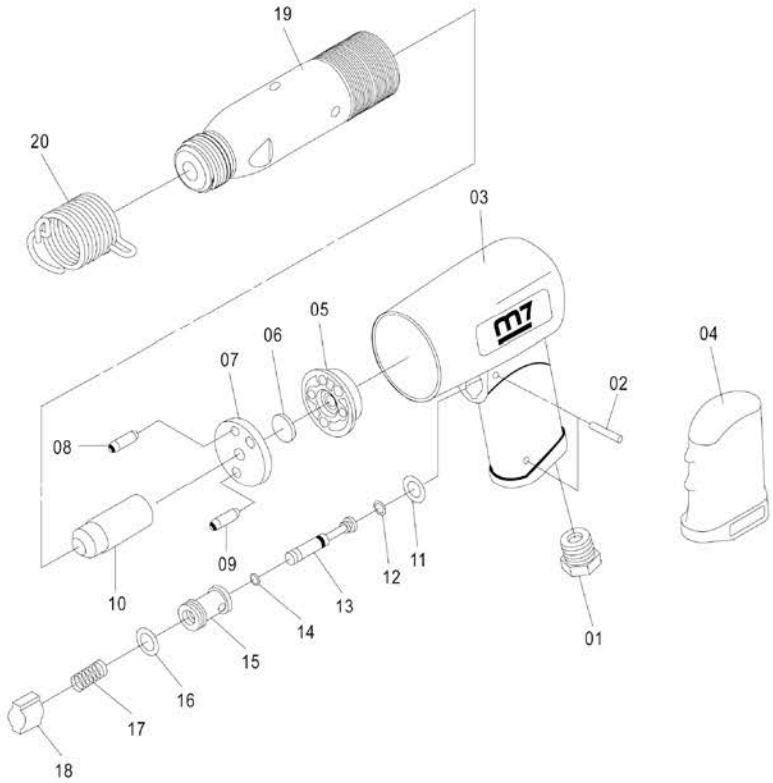

Part List SC-211C / SC-221C

	NO.	INDEX NO.	DESCRIPTION	Q'TY
★	01	SC-211P01	Air Inlet Bushing	1
★	02	SC-211T02	Roll Pin (3x18mm) (2 pcs)	1 set
★	03	SC-211P03	Housing	1
★	04	SC-211P04	Grip	1
X	05	---	Upper Valve Block	1
X	06	---	Valve Disc	1
X	07	---	Lower Valve Block	1
X	08	---	Valve Pin (5x19mm)	1
X	09	---	Valve Pin (6x19mm)	1
●	10	SC-211P10	Piston	1
▲	11	SC-211P11	O-Ring (11x2.4mm)	1
▲	12	SC-211P12	O-Ring (3.8x1.9mm)	1
★	13	SC-211P13	Valve Stem	1
▲	14	SC-211P14	O-Ring (3.5x1.5mm)	1
★	15	SC-211P15	Throttle Bushing	1
▲	16	SC-211P16	O-Ring (12x2mm)	1
★	17	SC-211P17	Spring	1
★	18	SC-211P18	Trigger	1
★	19	SC-211P19	Cylinder (Round Shank) SC-211	1
		SC-221P19	Cylinder (Hex Shank) SC-221	1
●	20	SC-211P20	Chisel Limitator	1
●	T01	SC-211T01	Valve Assembly (05.06.07.08.09)	1 set