©2011 Lennox Industries Inc.
Dallas, Texas, USA

# INSTALLATION INSTRUCTIONS

## Dave Lennox *Signature*® Collection CBX32MV Units

MULTI-POSITION AIR HANDLER
506274-01
06/11
Supersedes 01/11

Technical Publications
Litho U.S.A.

## NOTICE

A thermostat is not included and must be ordered separately.

- The Lennox icomfort Touch™ thermostat must be used in communicating applications.
- In non-communicating applications, the Lennox ComfortSense® 7000 thermostat may be used, as well as other non-communicating thermostats.

In all cases, setup is critical to ensure proper system operation.

Field wiring for both communicating and non-communicating applications is illustrated in diagrams, which begin on page 13.

## ⚠ WARNING

Improper installation, adjustment, alteration, service or maintenance can cause personal injury, loss of life, or damage to property.

Installation and service must be performed by a licensed professional installer (or equivalent) or a service agency.

## Shipping and Packing List

Check unit for shipping damage. Consult last carrier immediately if damage is found.

Package 1 of 1 contains the following:

1 — Assembled air handler unit

2 — Downflow shields (if required for downflow configuration only)

1 — Drip shield **(for -068 only)**

**RETAIN THESE INSTRUCTIONS FOR FUTURE REFERENCE**

**Table of Contents**

Shipping and Packing List . . . . . 1
Upflow/Downflow Unit Dimensions . . . . . 2
Horizontal LH/RH Unit Dimensions . . . . . 3
Model Number Identification . . . . . 4
General . . . . . 4
Installation Clearances . . . . . 4
Requirements . . . . . 5
Installing the Unit . . . . . 5
Brazing Connections . . . . . 9
Installing the Condensate Drain . . . . . 11
Inspecting and Replacing Filters . . . . . 12
Sealing the Unit . . . . . 12
Field Control Wiring . . . . . 13
Air Handler Control Button, Display and Jumpers . . 21
Target CFM Tables . . . . . 25
Configuring Unit . . . . . 28
Error Code Recall Mode . . . . . 35
Indoor Blower Test . . . . . 36
Checkout Procedures . . . . . 36
Operation . . . . . 37
Maintenance . . . . . 37
Cabinet Insulation . . . . . 37

## IMPORTANT INFORMATION TO INSTALLER

CHECK FOR AND REMOVE THE FOLLOWING ITEMS BEFORE OPERATING UNIT.

**A** BLOWER HOUSING SUPPORT PAD.

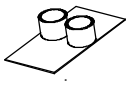

**B** TOP CAP SHIPPING BRACKET (REPLACE SCREWS IN TOP CAP AFTER REMOVAL).

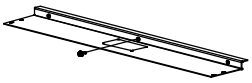

**C** HORIZONTAL DRAIN PAN (SEE *UPFLOW APPLICATIONS* ON PAGE 5 AND *DOWNFLOW APPLICATIONS* ON PAGE 8 )

**D** REFRIGERANT LINE PLUGS (*SEE BRAZING CONNECTION ON PAGE 9]* .

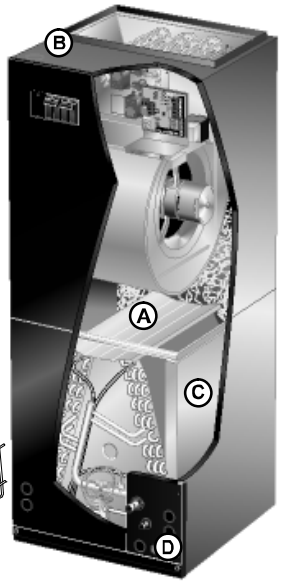


**FOR PROPER OPERATION THE ELECTRIC HEAT (IF APPLICABLE) MUST BE CONFIGURED (SET-UP) THROUGH THE AIR HANDLER CONTROL (AHC)**

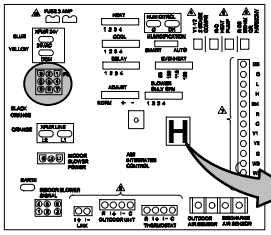


WHENEVER ELECTRIC HEAT IS INSTALLED THE AHC MUST BE MANUALLY CONFIGURED. SEE JUMPERS AND LINKS GUIDE ON **PAGE 20**.

**CONFIGURE ELECTRIC HEAT**

**H** ELECTRIC HEAT SECTIONS MUST BE CONFIGURED. IF INSTALLED SEE PROCEDURE IN **FIGURE 24** ON **PAGE 30**.

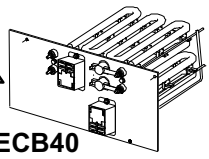

**ECB40**

## Upflow and Downflow Unit Dimensions — Inches (millimeters)

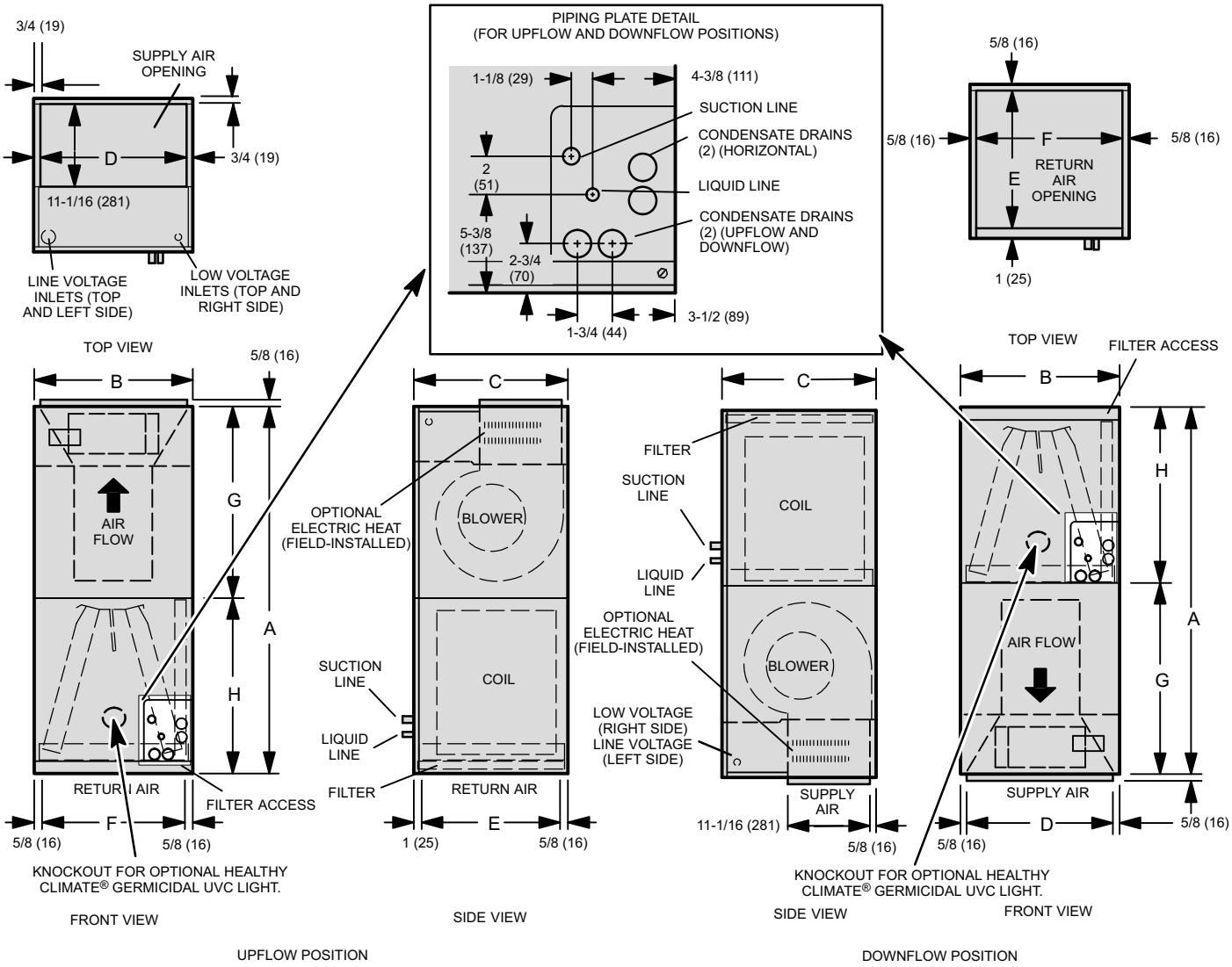


| Model Dimensions (Upflow, Downflow, Left- and Right-Hand Horizontal applications) | | | | | |
|---|---|---|---|---|---|
| **Dim.** | **-018/024** | **-024/030** | **-036** | **-048 and -060** | **-068** |
| | **in. (mm)** | **in. (mm)** | **in. (mm)** | **in. (mm)** | **in. (mm)** |
| **A** | 45-1/4 (1149) | 49-1/4 (1251) | 51 (1295) | 58-1/2 (1486) | 65 (1651) |
| **B** | 16-1/4 (413) | 21-1/4 (540) | 21-1/4 (540) | 21-1/4 (540) | 21-1/4 (540) |
| **C** | 20-5/8 (524) | 20-5/8 (524) | 22-5/8 (575) | 24-5/8 (625) | 26-5/8 (676) |
| **D** | 14-3/4 (375) | 19-3/4 (502) | 19-3/4 (502) | 19-3/4 (502) | 19-3/4 (502) |
| **E** | 19 (483) | 19 (483) | 21 (533) | 23 (584) | 25 (635) |
| **F** | 15 (381) | 20 (508) | 20 (508) | 20 (508) | 20 (508) |
| **G** | 24-5/8 (625) | 24-5/8 (625) | 26-3/8 (670) | 27-7/8 (708) | 32-3/8 (822) |
| **H** | 20-5/8 (524) | 24-5/8 (625) | 24-5/8 (625) | 30-5/8 (778) | 32-5/8 (829) |

## Horizontal Left- and Right-Hand Unit Dimensions — Inches (mm)

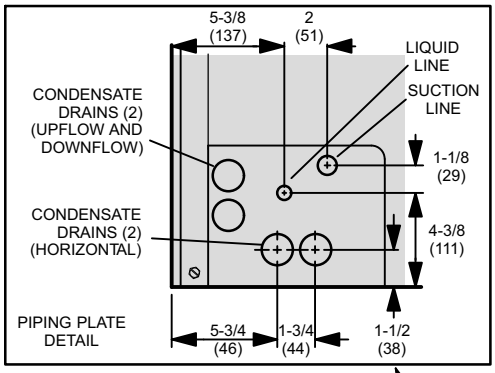


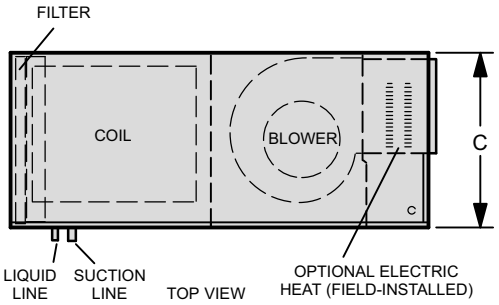


### Horizontal Position (Right-Hand Air Discharge)

FOR DIMENSIONS "A" THROUGH "H", SEE CHART ON PAGE 2.

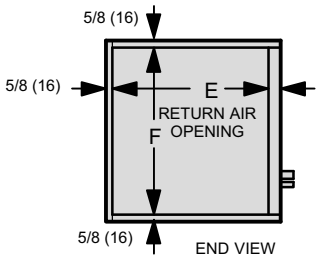


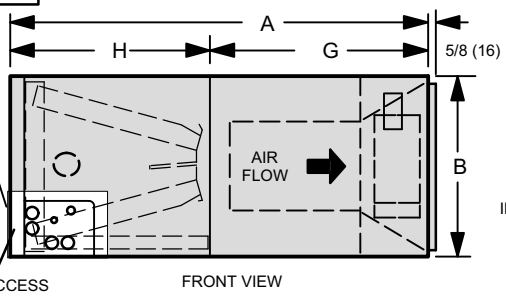


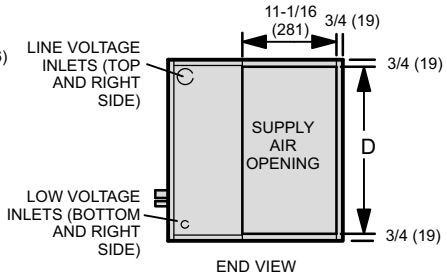


### Horizontal Position (Left-Hand Air Discharge)

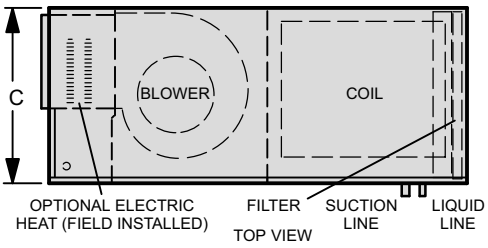


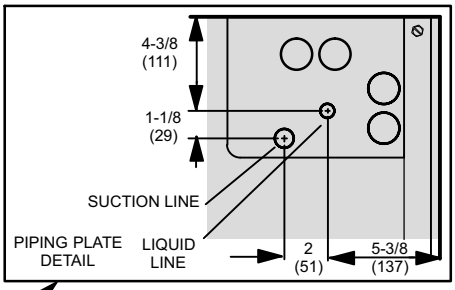


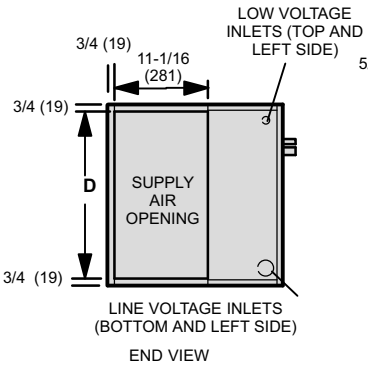


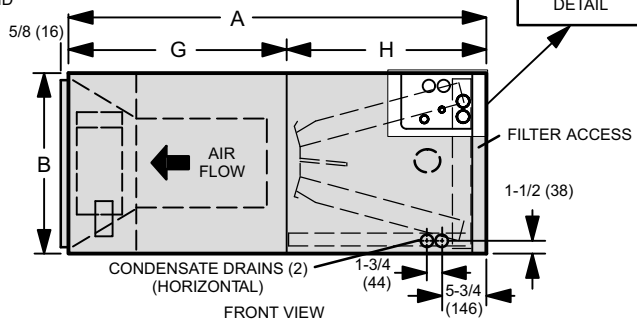


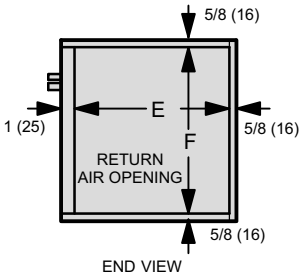

## Model Number Identification

CB X 32 MV - 036 - 230 - 6 - 01

**Unit Type**
CB = Air Handler

**Refrigerant Type**
X = R410A

**Series**

**Configuration**
MV = Multi-Position, Variable speed blower motor

**Nominal Cooling Capacity**
018/024 = 1.5 to 2 tons (5.3 to 7 kW)
024/030 = 2 to 2.5 tons (7 to 8.8 kW)
036 = 3 tons (10.6 kW)
048 = 4 tons (14.1 kW)
060 = 5 tons (17.6 kW)

**Voltage**
230 = 208/230V-60hz-1ph

**Refrigerant Metering Device**
2 = Fixed Orifice
3 = TXV - Bleed port (indoor unit)
4 = TXV - Non-bleed port (indoor unit)
5 = TXV - Non-bleed port (outdoor unit)
6 = TXV - R410A Non-bleed port (indoor unit)

**Minor Revision Number**

## General

This indoor unit is designed for installation with optional field-installed electric heat and a matched remote outdoor unit that is charged with HFC-410A refrigerant. These units, designed for indoor installation in multiple positions, are completely assembled for upflow and horizontal right-hand discharge before being shipped from the factory.

All CBX32MV air handlers are equipped with a factory-installed, internally mounted check / expansion valve (CTXV), which is suitable for use in HFC-410A applications.

This air handler is compatible with the ComfortSense® 7000 non-communicating thermostat and non-communicating outdoor units. In addition, this unit has the enhance capability of communicating with the icomfort Touch® thermostat and compatible outdoor units using the Lennox RSBus protocols.

*NOTE — For downflow or horizontal left-hand air discharge, certain field modifications are required.*

These instructions are intended as a general guide and do not supersede local or national codes in any way. Consult authorities having jurisdiction before installation. Check equipment for shipping damage; if found, immediately report damage to the last carrier.

## Installation Clearances

| | |
|---|---|
| **Cabinet** | 0 inch (0 mm) |
| **To Plenum** | 1 inch (25 mm) |
| **To Outlet Duct within 3 feet (914 mm)** | 1 inch (25 mm) |
| **Floor** | See Note #1 |
| **Service / Maintenance** | See Note #2 |

1 Units installed on combustible floors in the down-flow position with electric heat require optional down-flow additive base.

2 Front service access - 24 inches (610mm) minimum.

*NOTE — If cabinet depth is more than 24 inches (610 mm), allow a minimum of the cabinet depth plus 2 inches (51 mm).*

### ⚠ IMPORTANT

The Clean Air Act of 1990 bans the intentional venting of refrigerant (CFCs, HCFCs and HFCs) as of July 1, 1992. Approved methods of recovery, recycling or reclaiming must be followed. Fines and/or incarceration may be levied for noncompliance.

### ⚠ WARNING

During blower operation, the ECM motor emits energy that may interfere with pacemaker operation. Interference is reduced by both the sheet metal cabinet and distance.

### ⚠ CAUTION

Physical contact with metal edges and corners while applying excessive force or rapid motion can result in personal injury. Be aware of, and use caution when working near these areas during installation or while servicing this equipment.

### ⚠ WARNING

Product contains fiberglass wool.

Disturbing the insulation in this product during installation, maintenance, or repair will expose you to fiberglass wool. Breathing this may cause lung cancer. (Fiberglass wool is known to the State of California to cause cancer.)

Fiberglass wool may also cause respiratory, skin, and eye irritation.

To reduce exposure to this substance or for further information, consult material safety data sheets available from address shown below, or contact your supervisor.

Lennox Industries Inc.
P.O. Box 799900
Dallas, TX 75379-9900

## ⚠ WARNING

Improper installation of the air handler can result in personal injury or death.

Do not allow external combustion products or other contaminants to enter the return air system or to be mixed with air that will be supplied to the living space. Use sheet metal screws and joint tape or duct mastic to seal return air system to air handler. In platform installations, the air handler should be sealed airtight to the return air plenum. A door must never be used as a portion of the return air duct system. The base must provide a stable support and an airtight seal to the air handler. Allow absolutely no sagging, cracks, gaps. etc.

For no reason should return and supply air duct systems ever be connected to or from other heating devices such as a fireplace or stove. etc. Fire, explosion, carbon monoxide poisoning, personal injury and/or property damage could result.

## Requirements

In addition to conforming to manufacturer's installation instructions and local municipal building codes, installation of Lennox air handler units (with or without optional electric heat), MUST conform with the following National Fire Protection Association (NFPA) standards:

- NFPA No. 90A — Standard for Installation of Air Conditioning and Ventilation Systems
- NFPA No. 90B — Standard for Installation of Residence Type Warm Air Heating and Air Conditioning Systems

This unit is approved for installation clearance to combustible material as stated on the unit rating plate. Accessibility and service clearances must take precedence over combustible material clearances.

## Installing the Unit

CBX32MV units are factory-configured for upflow and horizontal right-hand discharge installation. For downflow or horizontal left-hand discharge, certain field modifications are required.

### DISASSEMBLE AND REASSEMBLE AIR HANDLER UNIT

This unit consists of two sections which are shipped assembled from the factory. If necessary, the unit may be disassembled to facilitate setting the unit. Follow the steps below:

**To disassemble:**

1. Remove access panels.
2. Remove both blower and coil assemblies. This will lighten the cabinet for lifting.
3. Remove one screw from the left and right posts inside the unit. Remove one screw from each side on the back of the unit. Unit sections will now separate.

**To reassemble:**

1. Align cabinet sections together.
2. Reinstall screws.
3. Replace blower and coil assemblies.
4. Replace access panel.

### UPFLOW APPLICATION

Use the following procedures to configure the unit for upflow operations:

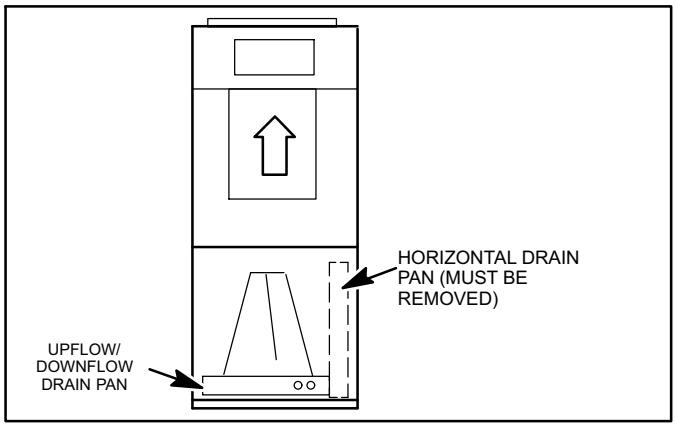


**Figure 1. Upflow Configuration**

*Note — **(-068 model Only)** Remove access panels and the horizontal drip shield along with the corrugated padding between the blower and coil assembly before operation. Discard drip shields from the foam pads on top of the unit. Shields are used for downflow applications only.*

1. The horizontal drain pan must be removed when the coil blower is installed in the upflow position. Removing horizontal drain pain will allow proper airflow and increase efficiency.
2. After removing horizontal drain pan, place the unit in desired location. Set unit so that it is level. Connect return and supply air plenums as required using sheet metal screws as illustrated in figure 1.
3. Install units that have no return air plenum on a stand that is at least 14" from the floor to allow for proper air return. Lennox offers an optional upflow unit stand as listed in table 1.

**Table 1. Optional Unit Side Stand (Upflow Only)**

| Models | Kit Numbers |
|---|---|
| -018/024 | 45K31 |
| -024/030, -036, -048 and -060 | 45K32 |

### HORIZONTAL RIGHT — HAND DISCHARGE APPLICATION

***NOTE** — When air handler is located above a finished space, the secondary drain pan must have a larger footprint than the air handler. In addition, a 3/4" (19.1MM) overflow drain line must be:*

- *Connected to secondary drain pan*

  *or*
- *Connected to the overflow drain outlet of the air handler drain pan.*

Use the following procedures to configure the unit for horizontal right-hand discharge operations:

*NOTE — For horizontal applications, a secondary drain pan is recommended. Refer to local codes.*

*NOTE — **(-068 Model Only)** Before operating the unit, remove access panels and the horizontal drip shield and the corrugated padding between the blower and coil assembly. Discard the corrugated padding and the downflow drip shields from the foam pads on top of the unit.*

*NOTE — **(-068 Model Only)** Install the horizontal shield on the front edge of the horizontal drain pan as illustrated in figure 2.*

1. No further adjustment is necessary. Set unit so that it is sloped 1/4 inch (6.35mm) towards the drain pan end of the unit.

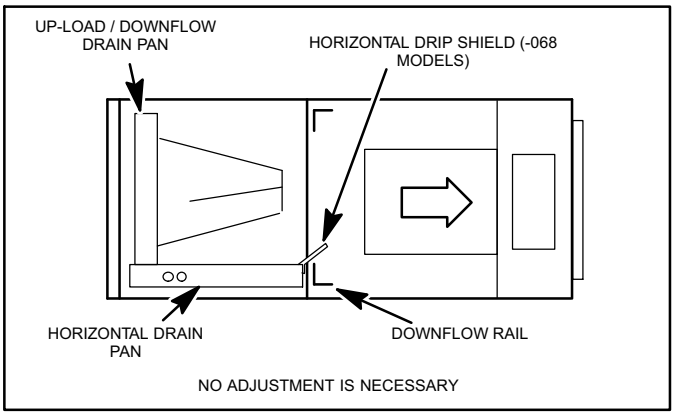


**Figure 2. Right-Hand Discharge Configuration**

2. If the unit is suspended, the entire length of the cabinet must be supported. If you use a chain or strap, use a piece of angle iron or sheet metal attached to the unit (either above or below) to support the length of the cabinet. Use securing screws no longer than 1/2 inch (12.7mm) to avoid damaging the coil or filter as illustrated in figure 3. Use sheet metal screws to connect the return and supply air plenums as required.

### HORIZONTAL RIGHT-HAND DISCHARGE APPLICATION IN HIGH HUMIDITY AREAS

For horizontal applications in high humidity areas remove the downflow rail closest to the drain pan.

**To remove rail:**

1. Remove the screws from the rail at the back of unit and at the cabinet support rail.
2. Remove the downflow rail then replace screws.
3. Seal around the exiting drain pipe, liquid line, and suction line to prevent humid air from infiltrating into the unit.

## ⚠ IMPORTANT

When removing the coil, there is possible danger of equipment damage and personal injury. Be careful when removing the coil assembly from a unit installed in right- or left-hand applications. The coil may tip into the drain pan once it is clear of the cabinet. Support the coil when removing it.

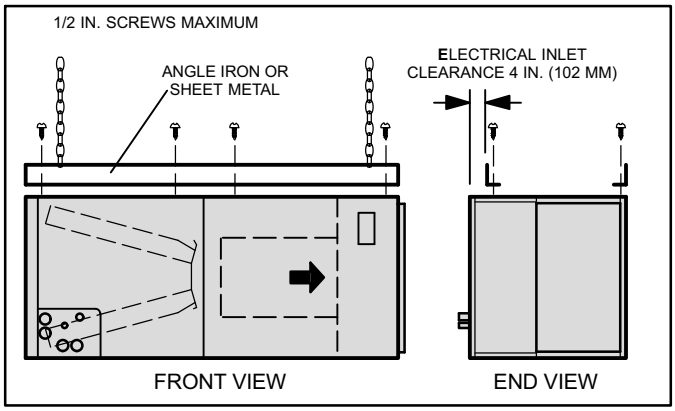


**Figure 3. Suspending Horizontal Unit**

### HORIZONTAL LEFT-HAND DISCHARGE APPLICATION

Use the following procedures to configure the unit for horizontal left-hand discharge operations:

*NOTE — For horizontal applications, a secondary drain pan is recommended. Refer to local codes.*

*NOTE — **(-068 Model Only)** Remove access panels and horizontal drip shield from the corrugated padding between the blower and coil assembly. Discard the corrugated padding and the downflow drip shields from the foam pads on top of the unit. (The shields are used for downflow applications only.)*

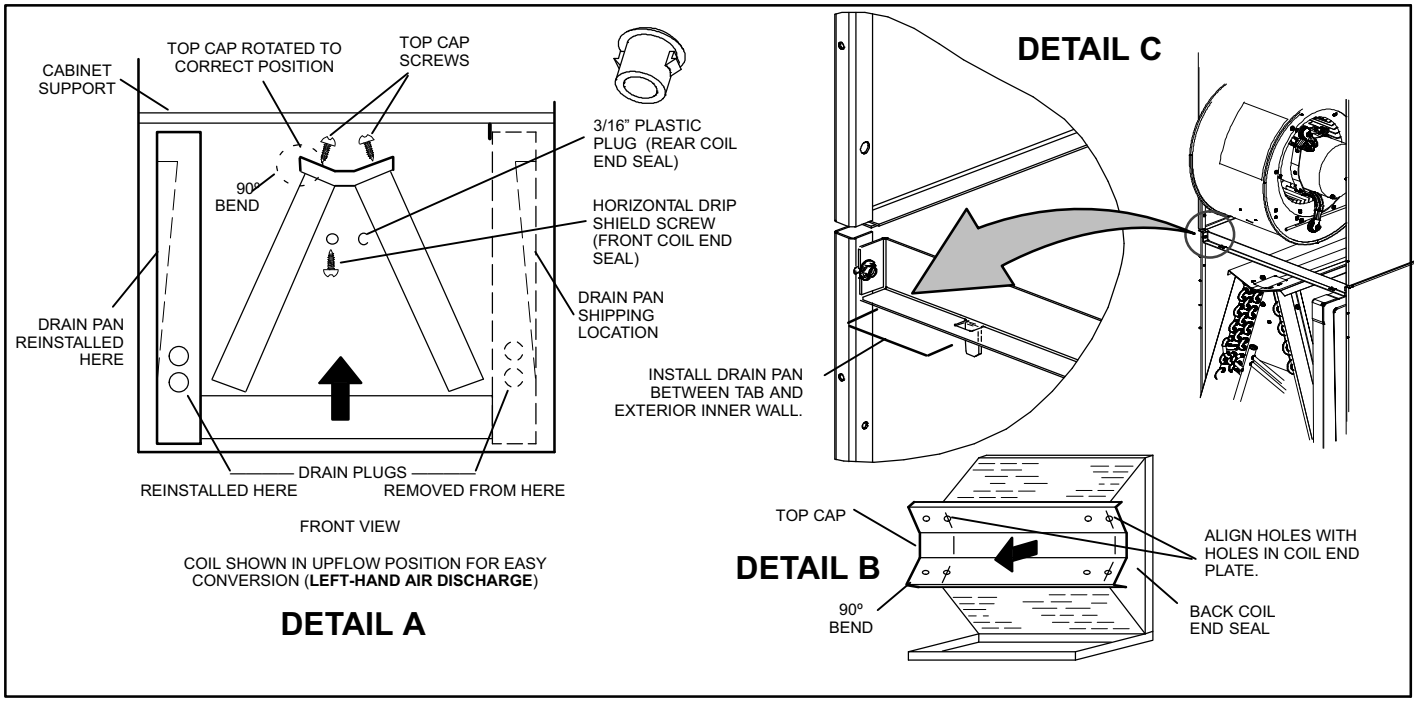


**Figure 4. Field Modification for Left-Hand Discharge**

## ⚠ IMPORTANT

After removal of drain pan plug(s), check drain hole(s) to verify that drain opening is fully open and free of any debris. Also check to make sure that no debris has fallen into the drain pan during installation that may plug up the drain opening.

1. Pull the coil assembly from unit. Pull off the horizontal drain pan.
2. Remove the drain plugs from back drain holes on horizontal drain pan and reinstall them on front holes.
3. Rotate drain pan 180º front-to-back and install it on the opposite side of the coil.
4. Remove screws from top cap as illustrated in figure 4, detail A.
5. Remove horizontal drip shield screw located in the left center of the back coil end seal as illustrated in figure 4, detail A.
6. Rotate horizontal drip shield 180º front to back.
7. Remove plastic plug from hole located on the left center of front coil end seal and reinstall plug in back hole on rear coil end seal.
8. Reinstall horizontal drip shield screw in front coil end seal. Drip shield should drain downward into horizontal drain pan inside coil.
9. Rotate top cap 180º front-to-back and align with unused screw holes. Holes must align with front and back coil end plates. The top cap has a 45º bend on one side and a 90º bend on the other. The 90º bend must be on the same side as the horizontal drain pan as illustrated in figure 4, detail B.

*NOTE — Be very careful when you reinstall the screws into coil end plate engaging holes. Misaligned screws may damage the coil.*

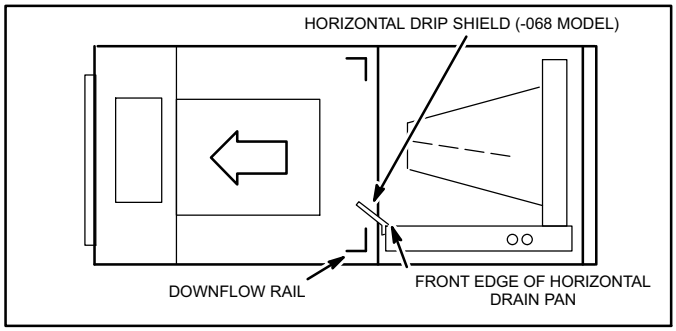


**Figure 5. Left-Hand Discharge Configuration**

10. From the upload position, flip cabinet 90º to the left and set into place. Replace coil assembly. Replace coil assembly. Install drain pan between exterior inner wall and tab as illustrated in figure 4, detail C.
11. ***(-068 Model Only)*** Install the horizontal shield on the front edge of the horizontal drain pan as shown in figure 5.

*NOTE — For horizontal applications in high humidity areas, remove the downflow rail closest to the drain pan. To remove rail, remove screw from rail at back of unit and at cabinet support rail. Remove downflow rail then replace screws. Also, seal around the exiting drain pipe, liquid and suction lines to prevent infiltration of humid air.*

12. Knock out drain seal plate from access door. Secure plate to cabinet front flange with screw provided.
13. Flip access door and replace it on the unit.
14. Set unit so that it is sloped 1/4 inch (6.35mm) toward the drain pan end of the unit. Connect return and supply air plenums as required using sheet metal screws.
15. If suspending the unit, it must be supported along the entire length of the cabinet. If using chain or strap, use a piece of angle iron or sheet metal attached to the unit (either above or below) so that the full length of the cabinet is supported. Use securing screws no longer than 1/2 inch (12.7mm) to avoid damage to coil or filter as illustrated in figure 3 on page 6. Connect return and supply air plenums as required using sheet metal screws.

**DOWNFLOW APPLICATION**

Use the following procedures to configure the unit for downflow operations:

**⚠ CAUTION**

**If electric heat section with circuit breakers (ECB29/ECB31) is applied to downflow CBX32MV unit, the circuit breakers must be rotated 180° to the UP position. See ECB29/ECB31 installation instructions for more details.**

Table 2 outlines the sizes of the various drip shields.

*NOTE — **(-068 Model Only)** Remove access panels and horizontal drip shield from the corrugated padding between the blower and coil assembly.*

*NOTE — Discard the corrugated padding and the downflow drip shields from the foam pads on top of the unit. (The shields are used for downflow applications only.)*

1. Remove the coil assembly from the unit.
2. For best efficiency and air flow, remove the horizontal drain pan from the units in downflow positions as illustrated in figure 6 on page 8.
3. Rotate cabinet 180º from the upright position. See figure 6. You may need to first remove the blower assembly to lighten the cabinet for lifting.
4. Foam tape that is provided creates a seal between the drip shield and the coil so that water does not leak into the air stream. The foam tape pieces are precut. Apply the tape to the drip shields as illustrated in figure 7 and specified as follows:
   - Apply two pieces of foam tape provided down both ends of each shield. The tape should measure 4-3/4” X 2” (120 X 25 mm). Ensure that the tape covers both sides of the shield equally.
   - Apply the longer piece of 1-inch wide foam tape between the end pieces of tape.
5. From the underside of the coil, install the downflow drip shield firmly in place as illustrated in figure 8.

**Table 2. Downflow Drip Shields (Tape Required)**

| Units | Length | Width |
|---|---|---|
| -018/024 | Not Required | Not Required |
| -024/030 | 15-7/8” | 4-11/16” |
| -036 | 17-7/8” | 4-11/16” |
| -048, -060, and -068 | 19-7/8” | 4-11/16” |

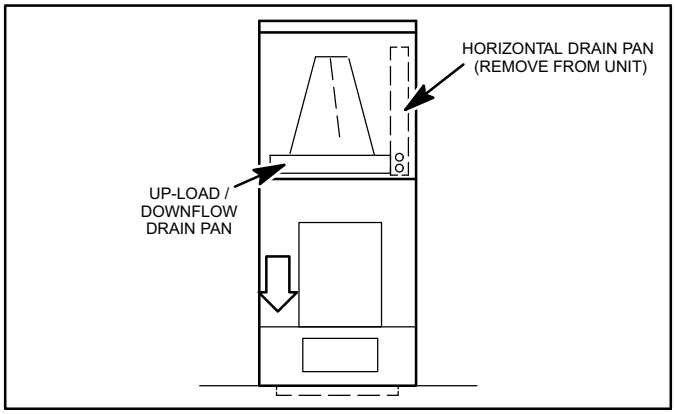


**Figure 6. Downflow Discharge Position**

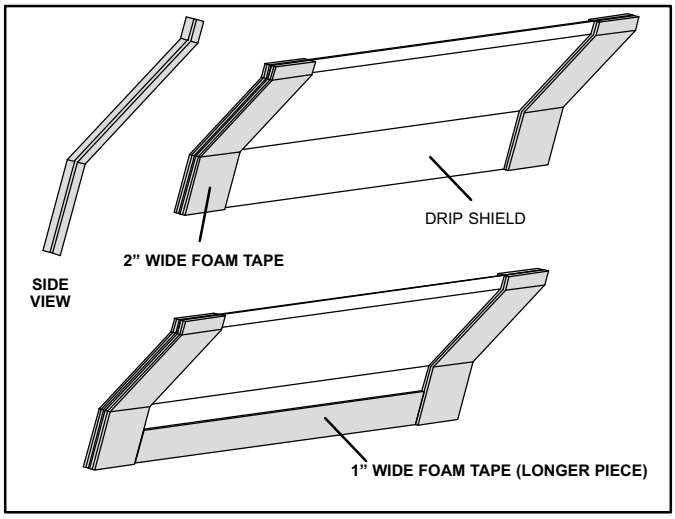


**Figure 7. Applying Foam Tape to Drip Shield**

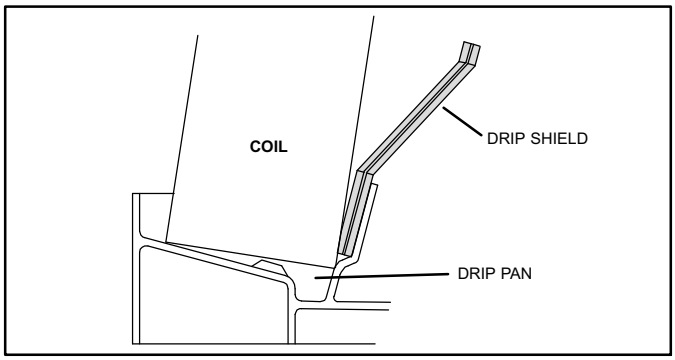


**Figure 8. Downflow Drip Shields**

6. Replace the coil assembly and blower if you have removed it. Replace the coil access panel.

7. Set the unit so that it is level. Using sheet metal screws, connect the return and supply air plenums as required.

*NOTE - For downflow application, metal or class I supply and return air plenums must be used.*

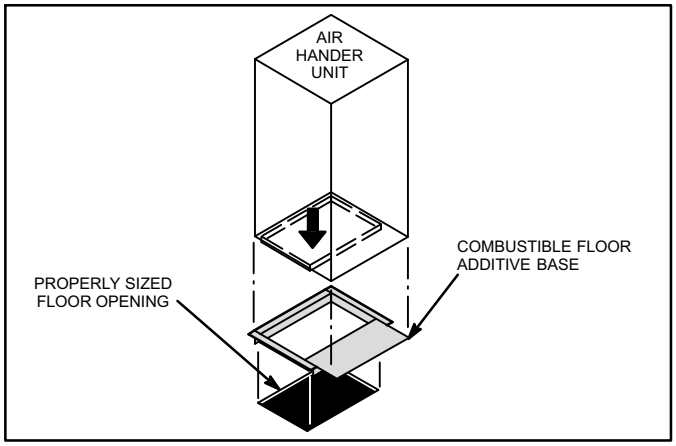


**Figure 9. Downflow Combustible Flooring Base**

8. For downflow installation on combustible flooring, an additive base must be used as illustrated in figure 9 on page 9. *See CBX32MV Engineering Handbook for downlfow combustible flooring base kits available for this air handler*.
9. Cut an opening appropriately sized for combustible base. Base dimensions are illustrated in figure 10. After opening has been cut, set the additive base into opening. Connect outlet air plenum to the additive base. Set the unit on the additive base so flanges of the unit drop into the base opening and seal against the insulation strips. The unit is now locked in place. Install return air plenum and secure with sheet metal screws.

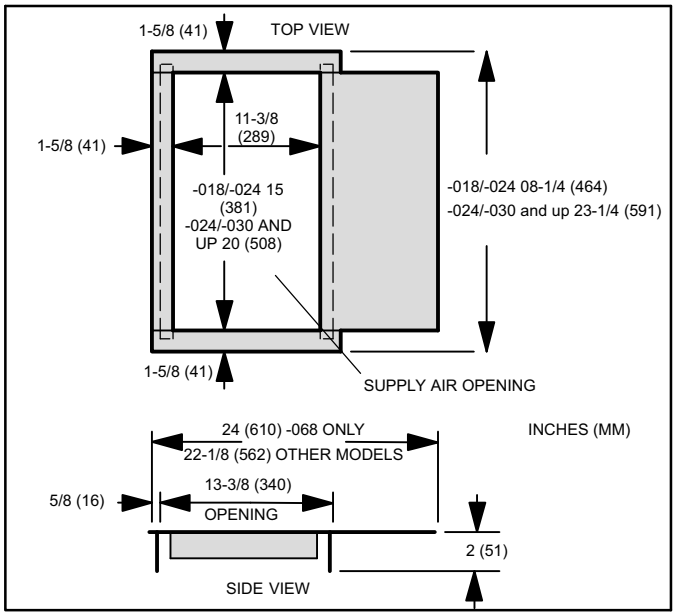


**Figure 10. Downflow Combustible Base Dimensions**

## Brazing Connections

**⚠ WARNING**

Polyol ester (POE) oils used with HFC-410A refrigerant absorb moisture very quickly. It is very important that the refrigerant system be kept closed as much as possible. DO NOT remove line set caps or service valve stub caps until you are ready to make connections.

**⚠ WARNING**

Danger of fire. Bleeding the refrigerant charge from only the high side may result in the low side shell and suction tubing being pressurized. Application of a brazing torch while pressurized may result in ignition of the refrigerant and oil mixture - check the high and low pressures before unbrazing.

**⚠ WARNING**

When using a high pressure gas such as dry nitrogen to pressurize a refrigeration or air conditioning system, use a regulator that can control the pressure down to 1 or 2 psig (6.9 to 13.8 kPa).

**⚠ CAUTION**

Brazing alloys and flux contain materials which are hazardous to your health.

Avoid breathing vapors or fumes from brazing operations. Perform operations only in well ventilated areas.

Wear gloves and protective goggles or face shield to protect against burns.

Wash hands with soap and water after handling brazing alloys and flux.

**⚠ IMPORTANT**

To prevent the build up of high levels of nitrogen when purging, be sure it is done in a well ventilated area. Purge low pressure nitrogen (1 to 2 psig) through the refrigerant piping during brazing. This will help to prevent oxidation and the introduction of moisture into a system.

**PLEASE READ IMPORTANT ISSUES CONCERNING BRAZING OPERATIONS ON PAGE 10 BEFORE PROCEEDING.**

**C** USE A WET RAG TO PROTECT CTXV SENSING BULB WHEN BRAZING SUCTION LINE CONNECTIONS.

NOTE — REFER TO OUTDOOR UNIT INSTALLATION INSTRUCTIONS FOR REFRIGERANT PIPING SIZE REQUIREMENTS.

*NOTE - Use silver alloy brazing rods with five or six percent minimum silver alloy for copper-to-copper brazing, 45 percent alloy for copper-to-brass and copper-to-steel brazing.*

**A** REMOVE ACCESS PANEL

**PIPING PLATE**

**B** REMOVE RUBBER PLUG FROM BOTH LIQUID AND SUCTION LINES

*NOTE — CBX32MV SERIES UNITS USE NITROGEN OR DRY AIR AS A HOLDING CHARGE. IF THERE IS NO PRESSURE WHEN THE RUBBER PLUGS ARE REMOVED, CHECK THE COIL FOR LEAKS BEFORE INSTALLING.*

**D** EITHER REMOVE OR PUSH PIPE WRAPPING BACK THROUGH HOLE IN PIPING PLATE BEFORE LINE SET CONNECTION AND BRAZING.

**LOW** **HIGH**

**F** CONNECT GAUGES AND START NITROGEN FLOW

FLOW REGULATED NITROGEN (AT 1 TO 2 PSIG) THROUGH THE REFRIGERATION GAUGE SET INTO THE VALVE STEM PORT CONNECTION ON THE OUTDOOR UNIT LIQUID LINE SERVICE VALVE AND OUT OF THE VALVE STEM PORT CONNECTION ON THE SUCTION SERVICE VALVE.

NITROGEN

**E** CONNECT PIPES

*NOTE — REFRIGERANT LINE SETS SHOULD BE ROUTED TO ALLOW FILTER ACCESSIBILITY.*

**G** PLACE A WET RAG AGAINST PIPING PLATE AND AROUND THE SUCTION LINE CONNECTION. A

**H** BRAZE CONNECTION. ALLOW PIPE TO COOL BEFORE REMOVING WET RAG FROM CTXV SENSING BULB AND PIPING PANEL AREA.

**I** REPEAT PREVIOUS PROCEDURE FOR LIQUID LINE.

REFER TO INSTRUCTIONS PROVIDED WITH OUTDOOR UNIT FOR LEAK TESTING, EVACUATING AND CHARGING PROCEDURES

**Figure 11. Brazing Connections**

**Table 3. CBX32MV Refrigerant Connections and Line Set Requirements**

| Models | Liquid Line | Vapor / Suction Line | L15 Line Set |
|---|---|---|---|
| -018/024 | 3/8” (10mm) | 5/8” (16mm) | L15 line set sizes are dependent on unit matchups. See CBX32MV Engineering Handbook to determine correct line set sizes. |
| -024/030 and -036 | 3/8” (10mm) | 3/4” (19mm) | |
| -048 | 3/8” (10mm) | 7/8” (22mm) | |
| -060 | 3/8” (10mm) | 7/8” (22mm) | Field-fabricated |
| -068 | 3/8” (10mm) | 1-1/8” (29mm) | |
| NOTE — Some applications may required a field provided 7/8” to 1-1/8” adapter | | | |

*NOTE — When installing refrigerant lines longer than 50 feet, see the Lennox Refrigerant Piping Design and Fabrication Guidelines, CORP. 9351-L9, or contact Lennox Technical Support Product Applications for assistance. To obtain the correct information from Lennox, be sure to communicate the following information:*

## Installing the Condensate Drain

**⚠ IMPORTANT**

After removal of drain pan plug(s), check drain hole(s) to verify that drain opening is fully open and free of any debris. Also check to make sure that no debris has fallen into the drain pan during installation that may plug up the drain opening.

### MAIN DRAIN

Connect the main drain and route downward to drain line or sump. Do not connect drain to a closed waste system. See Figure 13 for typical drain trap configuration.

### OVERFLOW DRAIN

It is recommended that the overflow drain is connected to a overflow drain line for all units. If overflow drain is not connected, it must be plugged with provided cap.

For downflow orientation, the overflow drain **MUST** be connected and routed to a overflow drain line. See Figure 13 for main and overflow drain locations based on coil orientation.

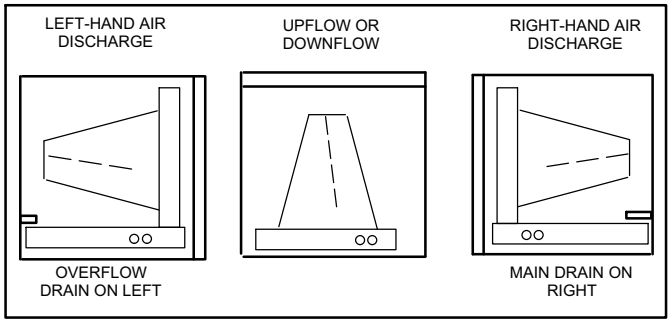


**Figure 12. Main and Overflow Drain Locations based on Coil Orientation**

### BEST PRACTICES

The following best practices are recommended to ensure better condensate removal:

- Main and overflow drain lines should **NOT** be smaller than both drain connections at drain pan.
- Overflow drain line should run to an area where homeowner will notice drainage.
- It is recommended that the overflow drain line be vented and a trap installed. Refer to local codes.

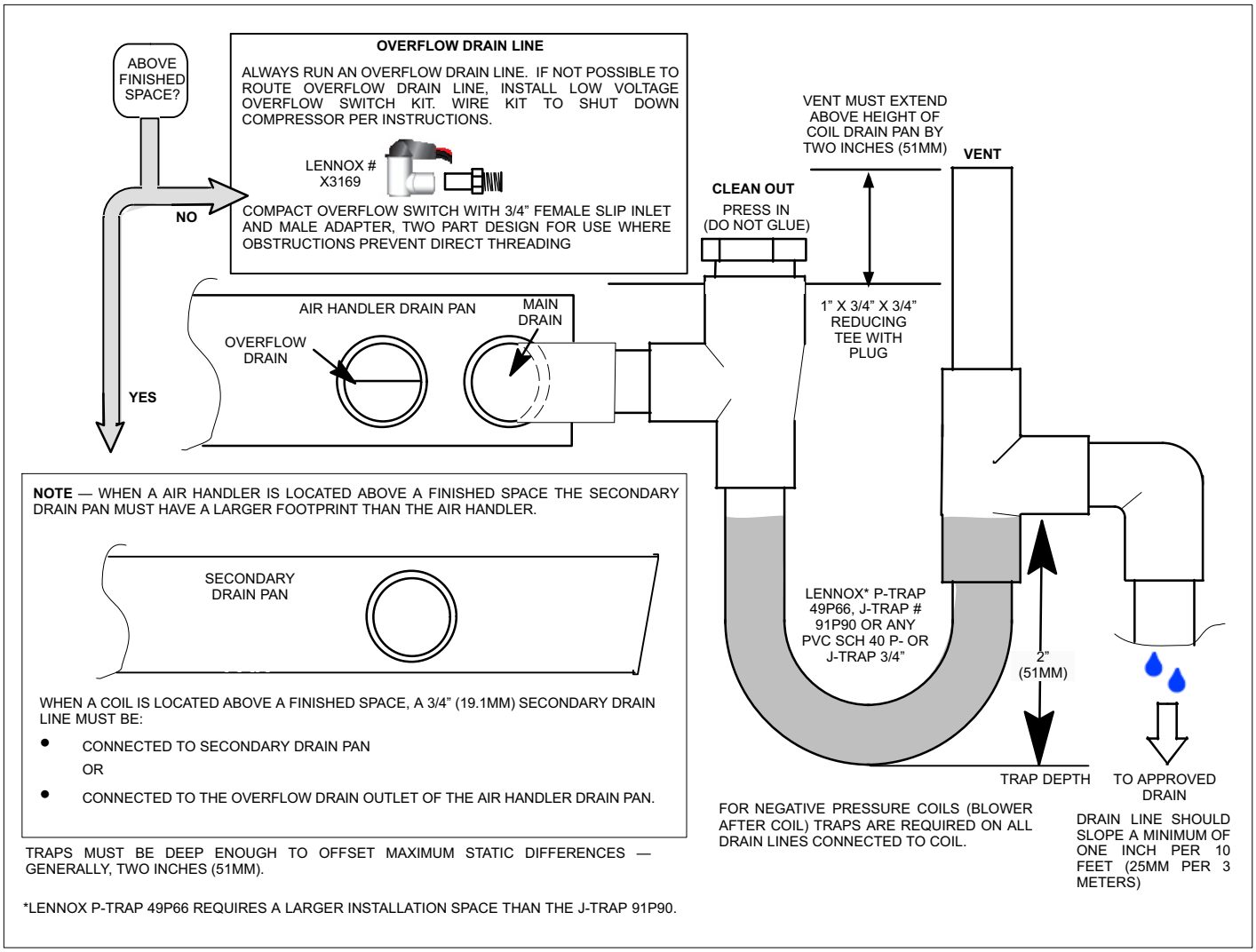


**Figure 13. Typical Main and Overflow Drain Installations**

## Inspecting and Replacing Filters

**⚠ IMPORTANT**

Filter access door must be in place during unit operation. Excessive warm air entering the unit from unconditioned space may result in water blow-off problems.

Filters may be duct-mounted or installed in the cabinet. A filter is installed at the factory. Note that filter access door fits over access panel. Air will leak if the access panel is placed over the filter door.

Filters should be inspected monthly and must be cleaned or replaced when dirty to assure proper furnace operation.

**To replace filter:**

1. Loosen the thumbscrews holding the filter panel in place.
2. Slide the filter out of the guides on either side of cabinet.
3. Insert new filter.
4. Replace panel.

See table 4 for replacement filter sizes.

**Table 4. Filter Dimensions**

| Unit Model No. | Filter Size Inches (mm) |
|---|---|
| -018/024 | 15 X 20 x 1(381 x 508 x 25) |
| -024/030 | 20 x 20 x 1(508 x 508 x 25) |
| -036 | 20 x 20 x 1(508 x 508 x 25) |
| -048 and -060 | 20 x 24 x 1(508 x 610 x 25) |
| -068 | 20 x 25 x 1(508 x 635 x 25) |

## Sealing the Unit

**⚠ WARNING**

There must be an airtight seal between the bottom of the air handler and the return air plenum. Use fiberglass sealing strips, caulking, or equivalent sealing method between the plenum and the air handler cabinet to ensure a tight seal. Return air must not be drawn from a room where this air handler or any gas-fueled appliance (i.e., water heater), or carbon monoxide-producing device (i.e., wood fireplace) is installed.

Seal the unit so that warm air is not allowed into the cabinet. Warm air introduces moisture, which results in water blow-off problems. This is especially important when the unit is installed in an unconditioned area.

Make sure the liquid line and suction line entry points are sealed with either the provided flexible elastomeric thermal insulation, or field provided material (e.g. *Armaflex*, *Permagum* or equivalent). Any of the previously mention materials may be used to seal around the main and auxiliary drains, and around open areas of electrical inlets.

## Field Control Wiring

**⚠ WARNING**

Electric Shock Hazard.

Can cause injury or death.

Foil-faced insulation has conductive characteristics similar to metal. Be sure there are no electrical connections within a ½" of the insulation. If the foil-faced insulation comes in contact with electrical voltage, the foil could provide a path for current to pass through to the outer metal cabinet. While the current produced may not be enough to trip existing electrical safety devices (e.g. fuses or circuit breakers), the current can be enough to cause an electric shock hazard that could cause personal injury or death.

Wiring must conform to the current National Electric Code ANSI/NFPA No. 70, or Canadian Electric Code Part I, CSA Standard C22.1, and local building codes. Refer to following wiring diagrams. See unit nameplate for minimum circuit ampacity and maximum over-current protection size.

**⚠ WARNING**

Run 24V Class II wiring only through specified low voltage opening. Run line voltage wiring only through specified high voltage opening. Do not combine voltage in one opening.

Select the proper supply circuit conductors in accordance with tables 310-16 and 310-17 in the National Electric Code, ANSI/NFPA No. 70 or tables 1 through 4 in the Canadian Electric Code, Part I, CSA Standard C22.1.

Separate openings have been provided for 24V low voltage and line voltage. Refer to the dimension illustration of specific location.

**⚠ CAUTION**

USE COPPER CONDUCTORS ONLY.

**WIRING CONNECTIONS**

1. Install line voltage power supply to unit from a properly circuit breaker.
2. Ground unit at unit disconnect switch or to an earth ground.

*NOTE — Connect conduit to the unit using a proper conduit fitting. Units are approved for use only with copper conductors. A complete unit wiring diagram is located on the back side of the unit's access panel.*

3. Install low voltage wiring from outdoor to indoor unit and from thermostat to indoor unit.

*NOTE — For proper voltages, select control wiring gauge per the charts on page 19.*

| DESCRIPTION | |
|---|---|
| KEY | COMPONENT |
| A92 | CONTROL-INTEGRATED |
| B3 | MOTOR-BLOWER |
| J48 | JACK-MOTOR,VARIABLE SPEED |
| J49 | JACK-MOTOR,VARIABLE SPEED |
| P8 | PLUG-ELECTRIC HEAT |
| P48 | PLUG-MOTOR,VARIABLE SPEED |
| P49 | PLUG-MOTOR,VARIABLE SPEED |
| T1 | TRANSFORMER-CONTROL |

1 RECOMMENDED BLOWER SPEED TAP SELECTION

| SPEED TAP SELECTION | | | | |
|---|---|---|---|---|
| | COOL | | HEAT | |
| BLOWER COIL | CONDENS-ING UNIT | HEAT PUMP | CONDENS-ING UNIT WITH ELECTRIC HEAT ONLY | HEAT PUMP WITH ELECTRIC HEAT |
| -018<br>-024<br>-030<br>-036 | COOL PIN #3 | COOL PIN #3 | HEAT PIN #4 | HEAT PIN #4 |
| -042 | COOL PIN #3 | COOL PIN #3 | HEAT PIN #3 | HEAT PIN #3 |
| -048 | COOL PIN #2 | COOL PIN #2 | HEAT PIN #1 | HEAT PIN #1 |
| -060 | COOL PIN #3 | COOL PIN #3 | HEAT PIN #1 | HEAT PIN #1 |
| -068 | COOL PIN #3 | COOL PIN #3 | HEAT PIN #4 | HEAT PIN #4 |

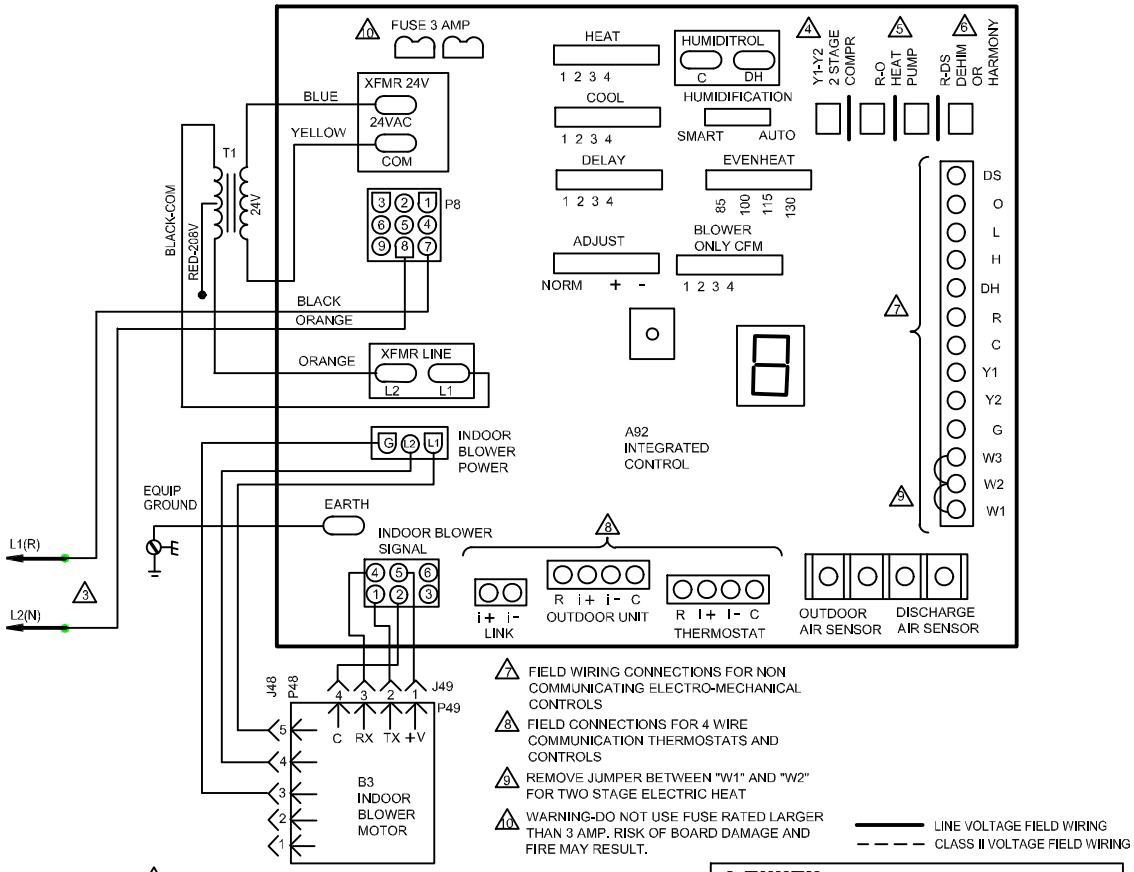


7 FIELD WIRING CONNECTIONS FOR NON COMMUNICATING ELECTRO-MECHANICAL CONTROLS

8 FIELD CONNECTIONS FOR 4 WIRE COMMUNICATION THERMOSTATS AND CONTROLS

9 REMOVE JUMPER BETWEEN "W1" AND "W2" FOR TWO STAGE ELECTRIC HEAT

10 WARNING-DO NOT USE FUSE RATED LARGER THAN 3 AMP. RISK OF BOARD DAMAGE AND FIRE MAY RESULT.

LINE VOLTAGE FIELD WIRING
CLASS II VOLTAGE FIELD WIRING

1 REFER TO FACTORY BLOWER SPEED TAP SELECTION CHART ON UNIT FOR BLOWER SPEED INFORMATION.

2 NEC/CEC CLASS 2 3VA

3 USE COPPER CONDUCTORS ONLY. REFER TO UNIT RATING PLATE FOR MINIMUM CIRCUIT AMPACITY AND MAXIMUM OVERCURRENT PROTECTION SIZE

4 LINK "Y1" TO"Y2" FOR SINGLE STAGE UNIT. CLIP LINK "Y1" TO "Y2" FOR TWO STAGE UNIT

5 LINK "R" TO "O" IS USED WITH AC UNIT. CLIP LINK "R" TO "O" WHEN HEAT PUMP IS USED

6 REMOVE LINK BETWEEN "R" AND "DS" WHEN DEHUMIDIFICATION CONTROL IS USED

LENNOX® COILS-BLOWER COIL UNITS

CBX32MV, CBX40UHV

COIL SECTION-

1209

Supersedes

New Form No.

537202-01

© 2009 Litho U.S.A.

**Figure 14. CBX32MV Air Handler Unit Typical Wiring Diagram**

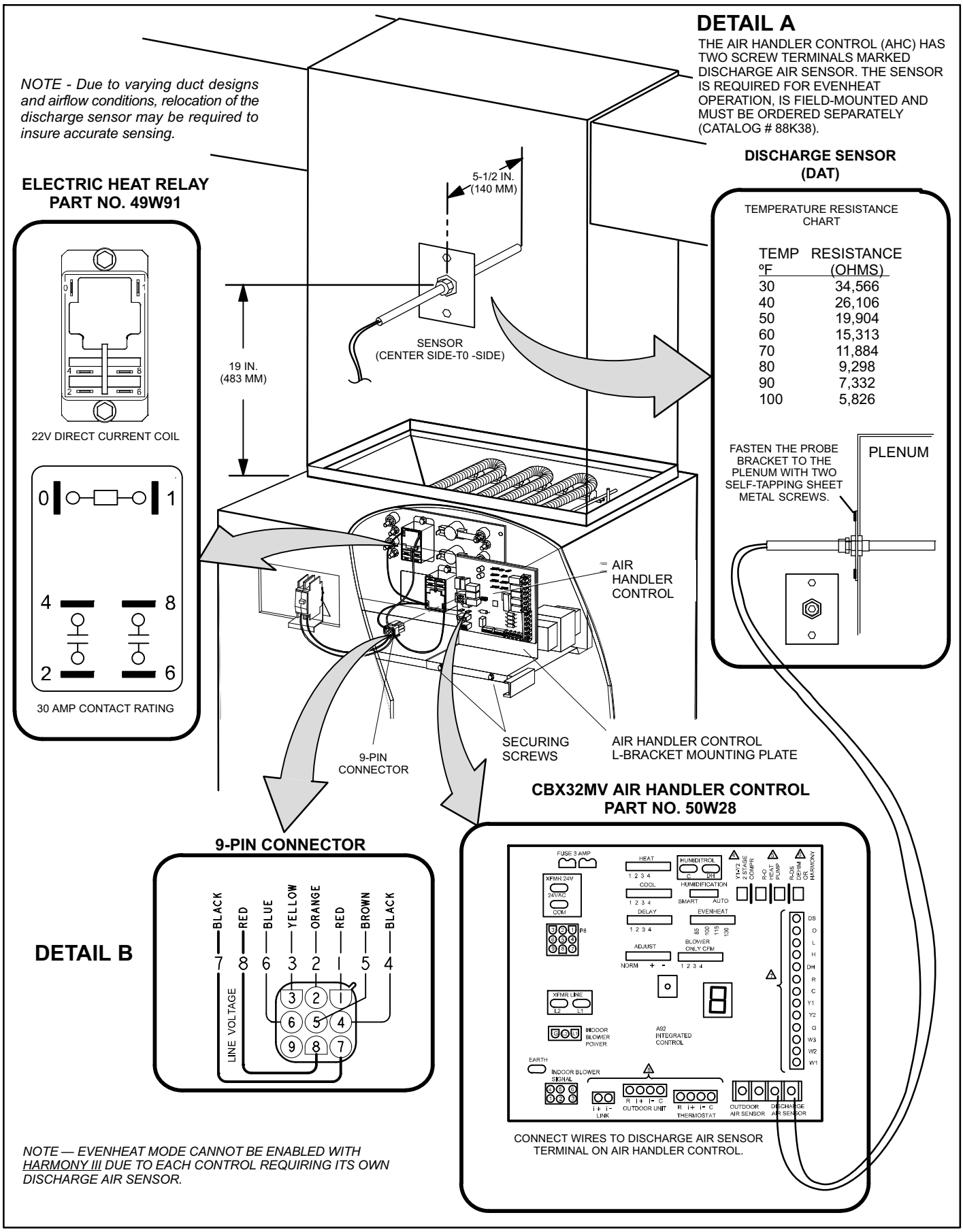


**Figure 15. Component Connections**

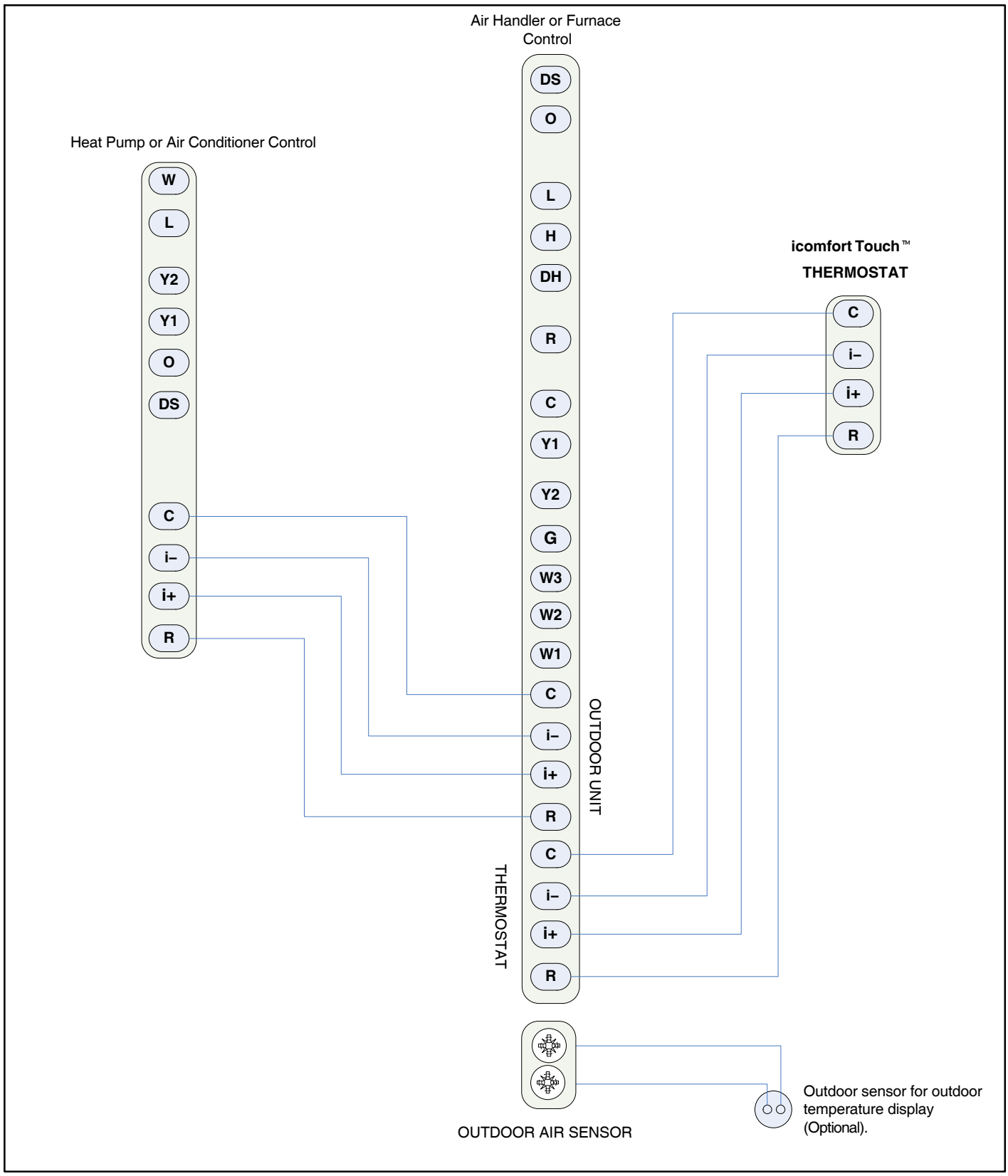


**Figure 16. Control (Field) Wiring — Communicating System (icomfort Touch™ Thermostat)**

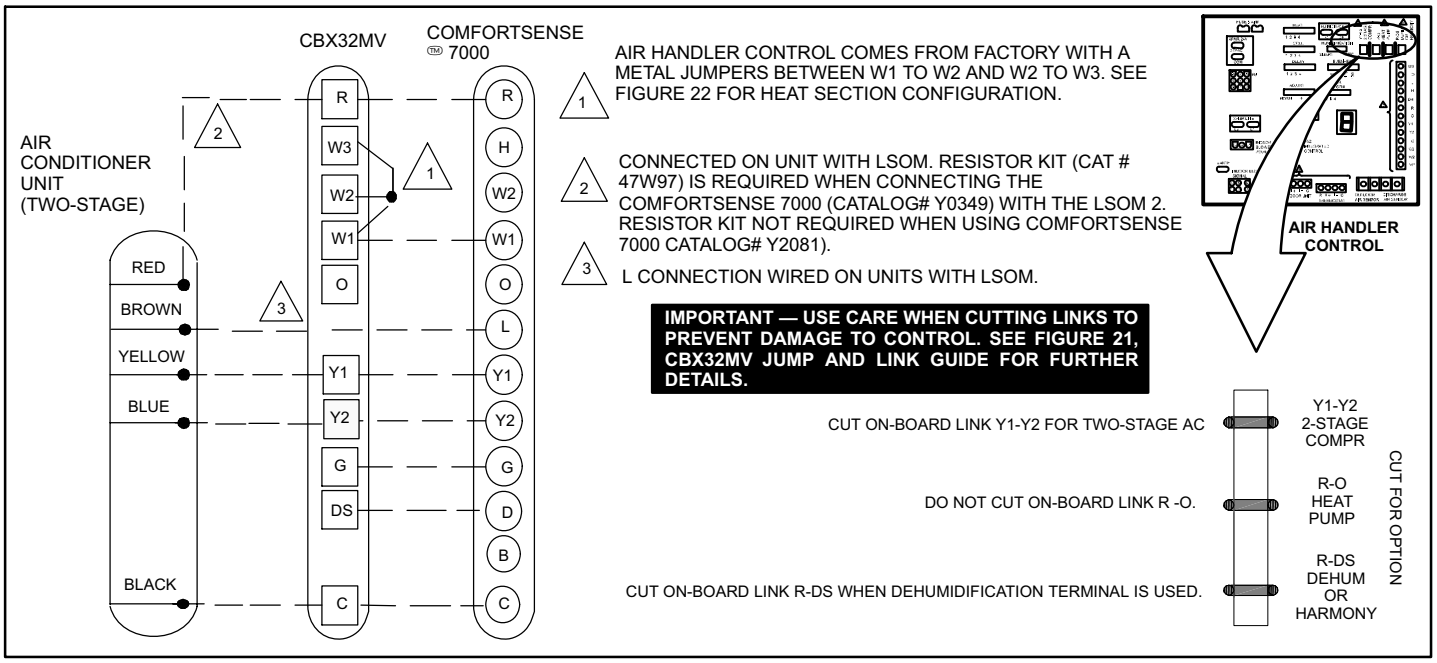


**Figure 17. Control (Field Wiring) — Cooling Application (Non-Communicating)**

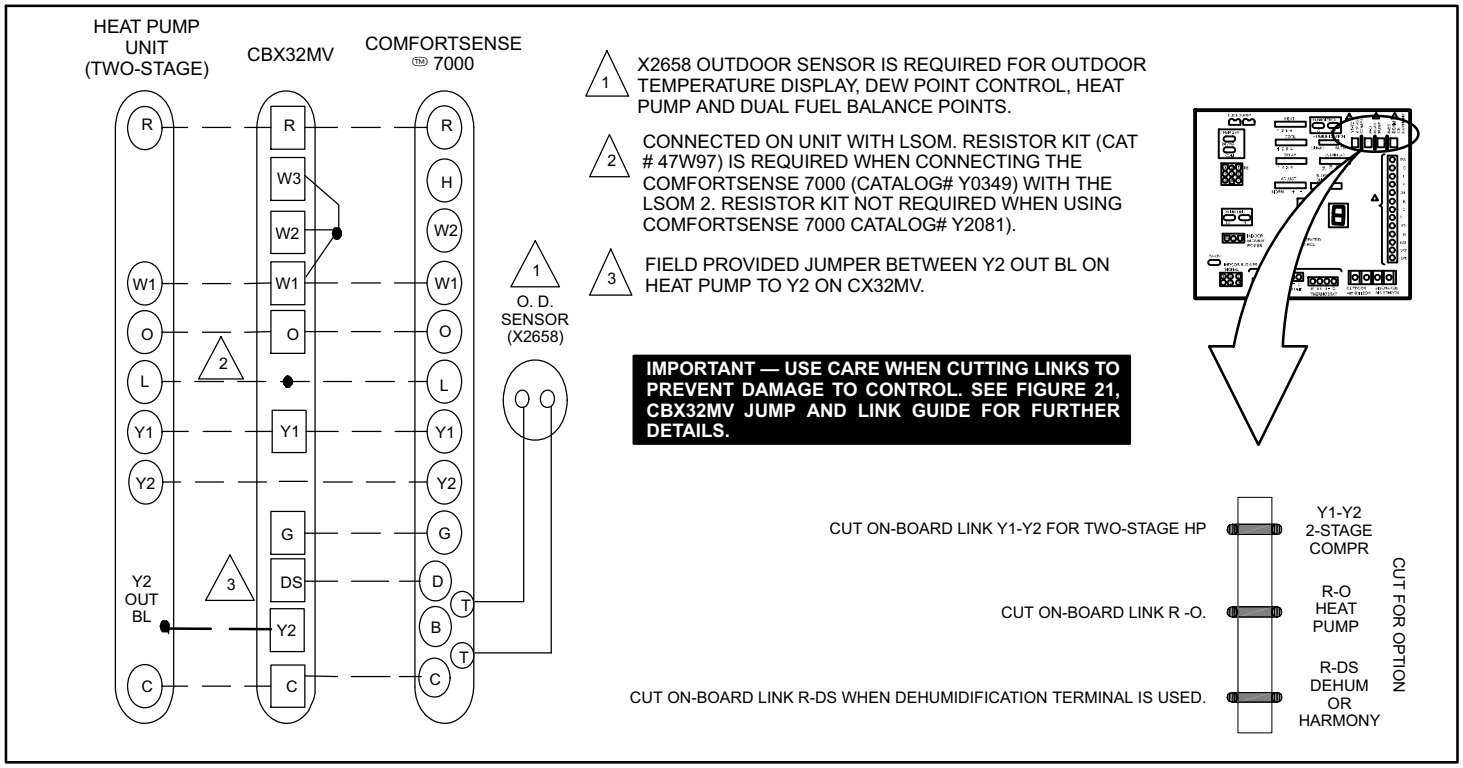


**Figure 18. Control (Field Wiring) — Heat Pump (Non-Communicating)**

## ⚠ CAUTION

| | |
|---|---|
| **ELECTROSTATIC DISCHARGE (ESD) Precautions and Procedures** | Electrostatic discharge can affect electronic components. Take precautions during unit installation and service to protect the unit's electronic controls. Precautions will help to avoid control exposure to electrostatic discharge by putting the unit, the control and the technician at the same electrostatic potential. Neutralize electrostatic charge by touching hand and all tools on an unpainted unit surface before performing any service procedure |

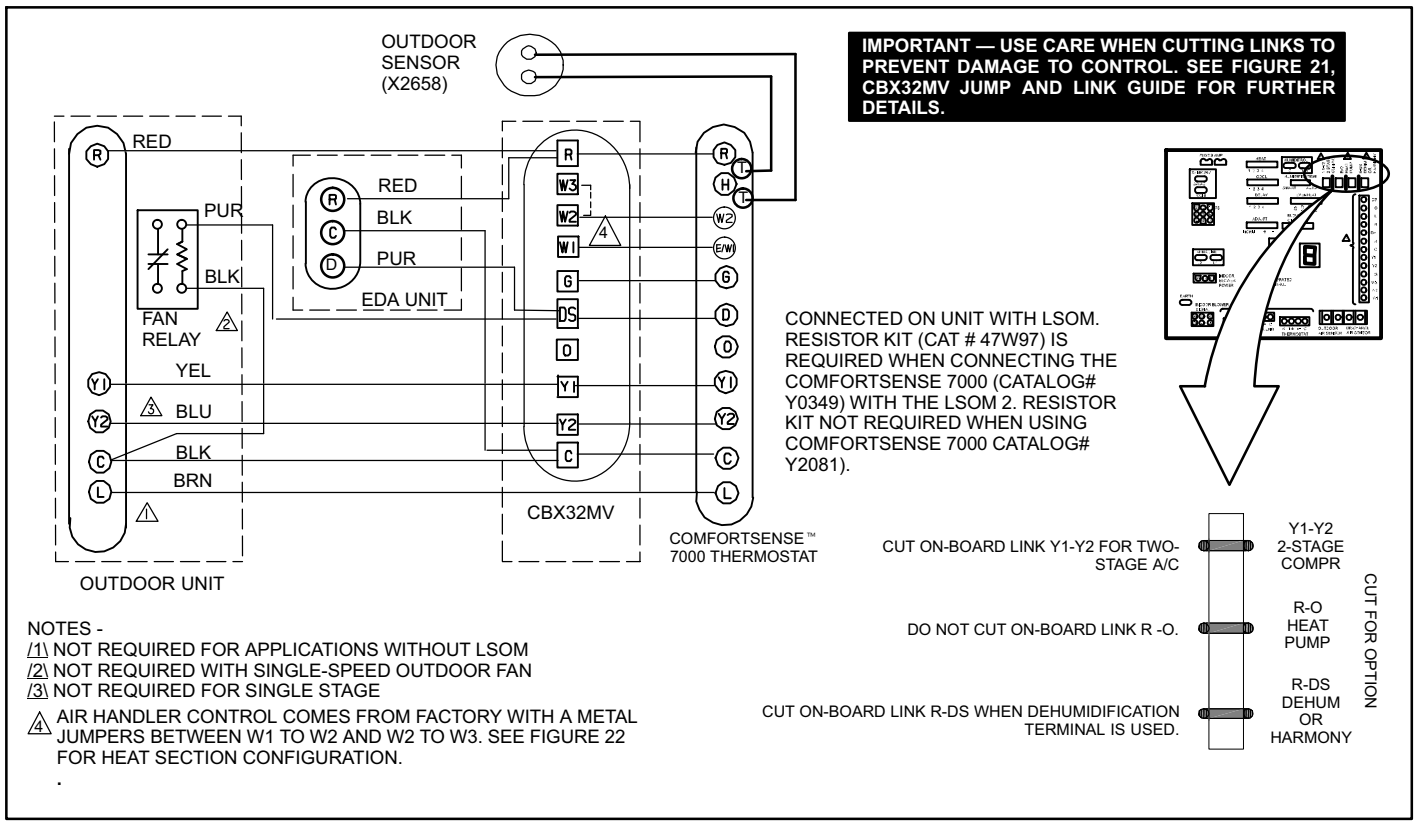


**Figure 19. Control (Field Wiring) — Cooling Application (Humiditrol ® and Second-Stage Outdoor Fan Relay Wiring) Non-Communicating**

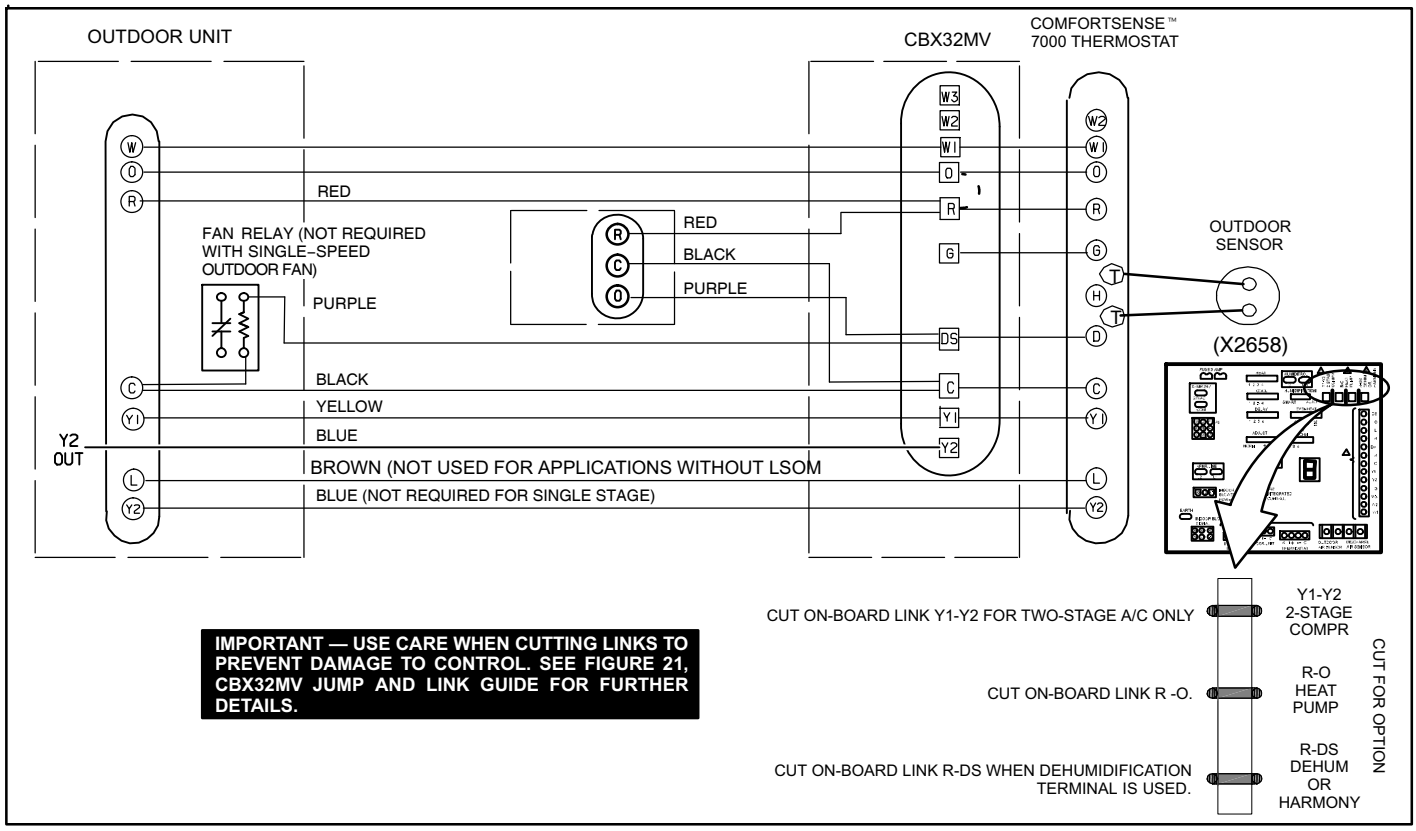


**Figure 20. Control (Field Wiring) — Heat Pump Application (Humiditrol ® and Second-Stage Outdoor Fan Relay Wiring) Non-Communicating**

## SENSOR CONNECTIONS AND WIRING REQUIREMENTS

The following are sensor connections and wiring requirements for the discharge air and outdoor air sensors.

### Discharge Sensor (DAT)

The Air Handler Control has two screw terminals marked **Discharge Air Sensor**. The sensor is REQUIRED for EVENHEAT operation and is field mounted and ordered separately using Lennox Catalog # 88K38.

In the EVENHEAT mode, the discharge air sensor cycles the electric heating elements as needed to maintain the Air Handler control EVENHEAT jumper selected discharge setpoint.

The discharge air sensor should be mounted downstream of the electric heat elements as illustrated in figure 15, detail A. It must be placed in a location with unobstructed airflow, where other accessories (such as humidifiers, UV lights, etc.) will not interfere with its accuracy.

Wiring distance between the Control and the discharge air sensor should not exceed 10 feet (3 meters) when wired with 18-gauge thermostat wire.

### Outdoor Air Sensor

This is a two screw terminal for connection to a Lennox X2658 outdoor temperature sensor. The Control takes no action on the sensor status other than to communicate the temperature to the RSBus network. Wiring distance between the AHC and outdoor temperature sensor should not exceed 200 feet when wired with 18-gauge thermostat wire.

- Minimum temperature: -40ºF (-40ºC)
- Maximum temperature: 70ºF (158ºC)

## AIR HANDLER CONTROL 9-PIN CONNECTOR (P8)

1. Air Handler (no electric heat) — Two wire factory harness (wired to pins 7 and 8) which provides 230 VAC power to Air Handler Control.
2. Air Handler (with electric heat) — Eight wire factory harness (all pin position are wired as noted in table 5).

*NOTE — See figure 15, detail B for wire colors.*

**Table 5. Electric Heat Connection (P8)**

| Position | Function / Description |
|---|---|
| 1 | Heat stage 1 relay coil |
| 2 | Heat stage 2 relay coil |
| 3 | Relay coil return |
| 4 | Heat stage 3 relay coil |
| 5 | Heat stage 4 relay coil |
| 6 | Heat stage 5 relay coil |
| 7 | L1 230VAC supply from heater kit |
| 8 | L2 230 VAC supply from heater kit |
| 9 | Not Used |

## CONTROL CONNECTIONS AND WIRING REQUIREMENTS

This sections provides information on communicating and non-communicating control connections and wire run lengths.

**Table 6. Air Handler Control Connections — Communicating**

| Label | Label | Function |
|---|---|---|
| Thermostat | R | 24VAC |
| | i+ | RSbus data high connection |
| | i- | RSbus data low connection |
| | C | 24VAC command (ground) |
| Outdoor Unit | R | 24VAC |
| | i+ | RSbus data high connection |
| | i- | RSbus data low connection |
| | C | 24VAC command (ground) |
| Link | i+ | Not used. |
| | i- | |

**Table 7. Run Length — Communicating**

| Wire Run Length | AWG # | Insulation/Core Types |
|---|---|---|
| Maximum length of wiring for all connections on the RSbus is limited to 1500 feet (457 meters). | 18 | Color-coded, temperature rating 95°F (35°C) minimum, solid core. (Class II Rated Wiring) |

**Table 8. Air Handler Control Connections — Non-Communicating**

| Label | Function |
|---|---|
| W1 | First–stage heating demand. |
| W2 | Second stage heating demand. W1 input must be active to recognize second stage heat demand. . |
| W3 | Third stage heating demand. W1 and W2 inputs must be active to recognize third stage heat demand. |
| G | 24VAC signal indicates the presence of a demand. |
| Y1 and Y2 | First and second stage cooling inputs. |
| C | 24VAC common. |
| R | 24VAC power. |
| DH | Use in communicating system only |
| H | 24VAC output for humidification. |
| L | Use in communicating system only |
| O | Reversing Valve input. (Energized by thermostat in cooling mode.) |
| DS | Blower speed control input for Harmony Zoning or thermostat de–humidification control. |
| DS | Blower speed control input for Harmony Zoning or thermostat de–humidification control. |

**Table 9. Run Length — Non-Communicating**

| Wire Run Length | AWG # | Insulation/Core Types |
|---|---|---|
| Less than 100' (30m) | 18 | Color-coded, temperature rating 95°F (35°C) minimum, solid core. (Class II Rated Wiring) |
| More than 100' (30m) | 16 | |

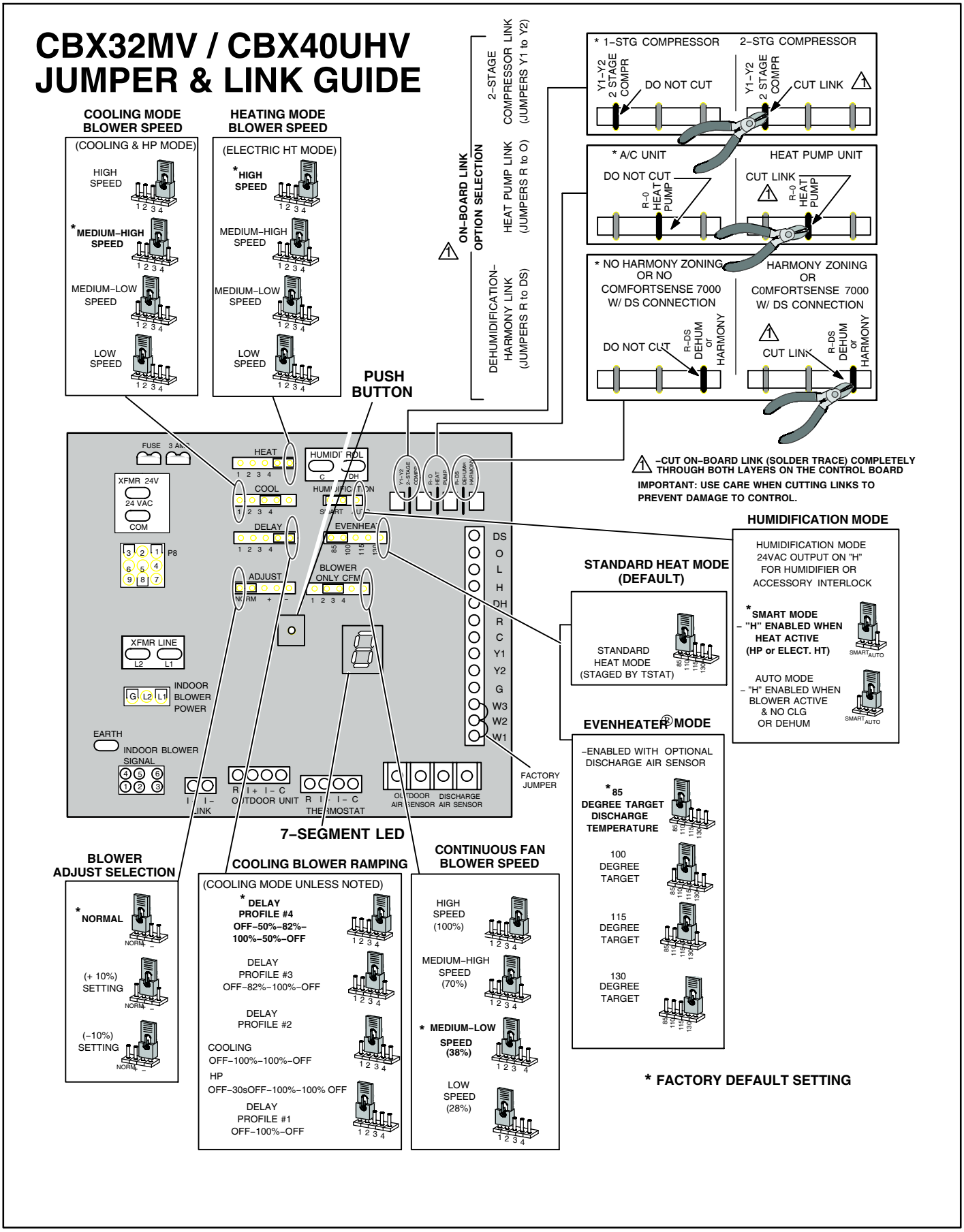


**Figure 21. Air Handler Configuration**

## Air Handler Control Button, Display and Jumpers

Use figure 21 as reference for jumper settings. If any of the reference jumpers are missing, the Air Handler Control will display Error Code **130** as per table 10, and the Air Handler Control will automatically use the **factory default** setting show in figure 21)

**⚠ IMPORTANT**

Before changing any clippable links or jumper settings, make sure the motor has completely stopped. Any changes will not take place while the motor is running.

### PUSH BUTTON

An on-board push button is provided for the purpose of placing the Air Handler Control in different operation modes and can be used to recall stored error codes. When button is pushed and held, Air Handler Control will cycle through a menu of options depending on current operating mode. Every three seconds a new menu item will be displayed. If the button is released while that item is shown on the display, Air Handler Control will enter displayed operating mode, or execute defined operation sequence for that menu option. Once all items on menu have been displayed the menu resumes from the beginning (if button is still held).

1. Press the diagnostic push button and hold it to cycle through a menu of options. Every five seconds a new menu item will be displayed. Release the button when the desired mode is displayed.
2. When the solid “E” is displayed, the control enters the Error Code Recall mode. Error Code Recall mode menu options: No change (displaying error history) remains in Error Code Recall mode; solid “≡” exits Error Code Recall mode; and solid “c” clears the error history. Must press button while flashing “c” is displayed to clear error codes
3. When the solid “-” is displayed, the control enters the applicable mode. Field configuration mode menu options: Solid “C” starts pressure switch calibration; blinking “-” exits current active mode.

### JUMPERS

Jumpers are used for non-communicating mode only.

1. **Humidification** — Controls the status of **H** terminal on the thermostat block. Configurations are as follows:
   - If jumper is installed in **SMART** Humidification position (Default), **H** terminal is active if heat demand is present and indoor blower is running.
   - If jumper is installed in **AUTO** Humidification position, **H** terminal is energized whenever indoor blower is running.
2. **EvenHeat** — Target Discharge Air Temperature selection is used to set discharge air temperatures for EvenHeat operation.

*NOTE - Optional Discharge Air Temperature Sensor, Lennox Catalog # 88K38 is REQUIRED for EVENHEAT operation and must be ordered separately.*

3. **Blower Only CFM** — Used to select Indoor blower CFM for continuous operation.
4. **Heat** — Used to select Indoor blower CFM for electrical heat by placing the jumper in proper position. Actual CFM values for different air handler sizes are shown in *Targeted CFM tables* starting on page 25.
5. **Cool** — Used to select cooling indoor blower CFM by placing the jumper in proper position. Actual CFM values for different air handler sizes are shown in *Targeted CFM tables* starting on page 25.
6. **Adjust** - Used to select the indoor blower CFM adjustment value by placing the jumper in appropriate position.
   - If **NORM** is selected, indoor blower runs at normal speeds.
   - If **+** is selected, indoor blower runs at approximately 10% higher speed than NORM setting.
   - If **-** is selected, indoor blower runs at approximately 10% lower speed than NORM setting.

   If the jumper is missing, the Air Handler Control will activate the *Configuration Jumper is Missing* alarm in and will automatically use the default factory setting in table 10. See figure 21 for jumper configurations. Actual CFM values for different air handler sizes are shown in *Targeted CFM tables* starting on page 25.
7. **Delay** — Indoor blower cooling profile, delay for cooling and heat pump operations.
   - When operating a heat pump, delay profiles 1 and 2 are only applicable.
   - When operating a heat pump, and profiles 3 and 4 are selected, the Air Handler Control will default to profile 1.

   If the jumper is missing, the Air Handler Control will activate the *Configuration Jumper is Missing* alarm and will automatically use the default factory setting in table 10. See figure 21 for jumper configurations.

**Delay Profile 1**

**A** When cool or heat demand is initiated, motor ramps up to 100% and runs at 100% until demand is satisfied.

**B** Once demand is met, motor ramps down to stop.

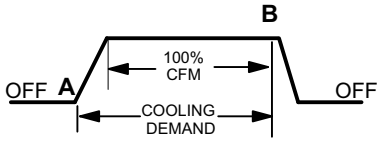


**Delay Profile 2**

**Cooling — Air Conditioner and Heat Pump:**

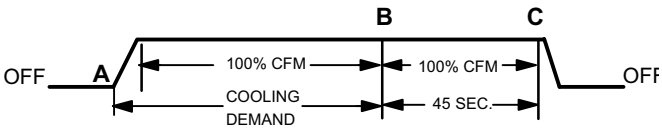


**A** When cool demand is initiated, motor ramps up to 100% and runs at 100% until demand is satisfied.

**B** Once demand is met, motor runs at 100% for 45 seconds.

**C** Motor ramps down to stop.

**Heating — Heat Pump only:**

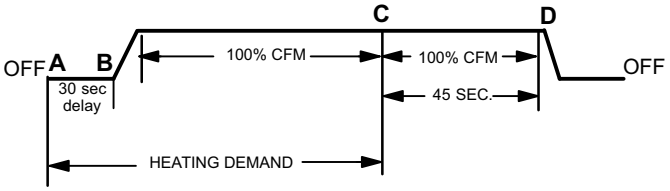


**A** When heat demand is initiated, 30 seconds motor on delay starts

**B** After the motor on delays expires, motor ramps up to 100% and runs at 100% until demand is satisfied.

**C** Once demand is met, motor runs at 100% for 45 seconds.

**D** Motor ramps down to stop.

**Delay Profile 3**

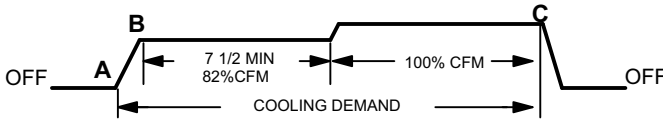


**A** When cool demand is initiated, motor ramps up to 82%

**B** Motor runs at 82% for approximately 7.5 minutes and then ramp up to 100% (unless the demand has been satisfied) and motor runs at 100% until demand is satisfied.

**C** Once demand is met, motor ramps down to stop

**Delay Profile 4**

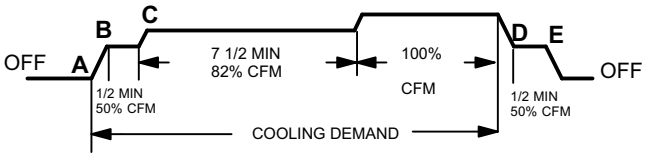


**A** When cool demand is initiated, motor ramps up to 50%

**B** Motor runs at 50% for 30 seconds and ramps up to 82%

**C** Motor runs at 82% for approximately 7.5 minutes and then ramp up to 100% (unless the demand has been satisfied) and motor runs at 100% until demand is satisfied.

**D** Once demand is met, motor runs at 50% for 30 seconds.

**E** Motor ramps down to stop.

**DISPLAY**

An on-board single character LED display (see figure 21 for LED display location) indicates general system status information such as mode of operation, indoor blower CFM and error codes. Multi-character strings are displayed with character ON for one second, OFF for 0.5 seconds and one second pause between the character groups.

**Table 10. AHC System Status Codes**

| AHC Single Character Display | Action |
|---|---|
| **Letter or Number** | Unit Size Code displayed represents air handler model size and capacity. See *Configuring Unit Size Codes* in figure 23. |
| ≡ | If three horizontal bars are displayed, AHC does not recognize air handler model size and capacity. See Configuring Unit Size Codes in Figure 23. |
| . | Idle mode (decimal point / no unit operation) |
| A | Cubic feet per minute (cfm) setting for indoor blower (1 second ON, 0.5 second OFF) / cfm setting for current mode displayed. Example: A 1200 |
| C | Cooling stage (1 second ON, 0.5 second OFF) / 1 or 2 displayed / Pause / cfm setting displayed / Pause / Repeat codes). Example C 1 or C2 |
| d | Dehumidification mode (1 second ON) / 1 second OFF) / cfm setting displayed / Pause / Repeat Codes) |
| d F | Defrost mode. (Y, W and O call) |
| H | Heat Stage (1 second ON, 0.5 second OFF) / 1 or 2 displayed / Pause / cfm setting displayed / Pause / Repeat codes. Example: H 1 or H2 or H3 |
| h | Variable Capacity Heat (1 second ON, 0.5 second OFF) / % of input rate displayed / Pause/ cfm setting / Pause/ Repeat codes. Example: h 1 or h2 |
| U | Discharge air sensor temperature (indoor blower must be operating) U 105 |

## Table 11. AHC Configuration, Test and Error Recall (Fault and Lockout) Function

| NOTE — AHC MUST BE IN IDLE MODE) | | |
|---|---|---|
| **Single Character LED Display** | | **Action** |
| Solid | - | Push and hold button until solid appears, release button. Display will blink. |
| Blinking | - | Push and hold button until required symbol displays. H A or P |
| **CONFIGURING ELECTRIC HEAT SECTIONS** | | |
| Solid | H | Release push button - control will cycle the indoor blower motor **on** to the selected heat speed and stage the electric heat relays **on** and **off** to automatically detect number of electric heat sections. Control will store the number of electric heat sections. Control will automatically exit ***current active mode***. |
| **INDOOR BLOWER TEST** | | |
| Solid | A | Release push button - control cycles indoor blower on for ten seconds at 70% of maximum air for selected capacity size unit. Control will automatically exit ***current active mode***. |
| **CONFIGURING UNIT SIZE CODES** | | |
| **Single Character LED Display** | | **Action** |
| Solid | P | **RELEASE** push button - This mode allows the field to select a unit size code (number or letter) that matches the air handler model size and capacity.<br>**IMPORTANT — All field replacement controls may be manually configured to confirm air handler model size and capacity.** |
| Blinking | P | 1. When the correct **Unit Sized Code** is displayed, **RELEASE** push button. Selected code will flash for 10 second period.<br>2. During ten second period, **HOLD** push button until code stops blinking (three seconds minimum).<br>3. Air Handler Control will store code in memory and exit ***current active mode.*** LED display will go blank and then the **Unit Size Code** will display for 2 to 5 seconds.<br>**NOTE** - If ten second period expires, or push button is held less than 3 seconds, control will automatically exit ***current active mode*** and go into **IDLE Mode** without storing unit size code. If this occurs, then **Unit Size Code** configuring procedure must be repeated. |
| **ERROR CODE RECALL MODE (NOTE — CONTROL MUST BE IN IDLE MODE)** | | |
| Solid | E | To enter ***Error Code Recall Mode*** — **PUSH** and **HOLD** button until solid **E** appears, then **RELEASE** button.<br>Control will display up to ten error codes stored in memory. If **E000** is displayed, there are no stored error codes. |
| Solid | = | To exit ***Error Code Recall Mode*** — **PUSH** and **HOLD** button until **solid three horizontal bars** appear, then **RELEASE** button.<br>*NOTE - Error codes are not cleared* |
| Solid | c | To clear error codes stored in memory, continue to **HOLD** push button while the three horizontal bars are displayed. Release push button when solid **c** is displayed. Display will blink. |
| Blinking | c | Push button to confirm command to delete codes. Error codes are cleared. |

## Table 12. AHC Single Character Display Alert Codes (Communicating and Non-Communicating)

| Alert Code | Status of Air Handler |
|---|---|
| E 105 | Device communications problem - No other devices on BUS (Communication system). |
| E 114 | No 60 hertz power (Check voltage and frequency) |
| E 115 | Low 24 volts (18 or less volts) - Control will restart if the error recovers. |
| E 120 | Unresponsive Device2 - Indicates a device on the RSbus is not responding to a message sent to it by another device. Error code is applicable to all communicating devices on the RSbus (thermostat, indoor and outdoor units). Normally indicates a malfunctioning device. |
| E 124 | Active Subnet Controller Missing for > 180 seconds. This indicates a data connection has been lost between a communicating device and the communicating thermostat. Device (indoor or outdoor unit) sends the alarm if no communication is established between device and thermostat within three minutes. |
| E 130 | Configuration jumper(s) is missing on AHC. |
| E 131 | Non-volatile data corruption. |
| E 132 | Failed Flash CRC check. |
| E 180 | Outdoor air temperature sensor (OAS) out of range. |
| E 201 | Indoor Blower communication failure - (includes indoor blower power outage) |
| E 202 | Incorrect air handler model size and capacity selected or wrong motor. Check for proper configuring under *Configuring Unit Size Codes*. |
| E 203 | No air handler model size and capacity selected. Check for proper configuring under *Configuring Unit Size Codes*. |
| E 292 | Indoor blower motor unable to start (seized bearing, stuck wheel, etc.). |
| E 295 | Indoor blower motor over temperature (motor trip on internal protector) |
| E 310 | Discharge air temperature sensor (DATS) out of range. |
| E 312 | Restricted airflow — Indoor blower motor is running at a reduced CFM (cutback mode **) |
| E 313 | Indoor and outdoor unit capacity mismatch. |
| E 331 | Global network connection error. This usually indicates there is a short or overladed resistance is to low) condition between communicating indoor and thermostat units. |
| E 345 | Jumper for second-stage cooling not removed. |
| E 346 | Jumper for heat pump operation not removed. |
| E 347 | Relay Y1 failure. |
| E 348 | Relay Y2 failure. |
| E 350 | Heat call with non-configured or mis-configured electric heat. Check for proper configuring under *Configuring Electric Heat Stages*. |
| E 351 | Heat section / Stage 1 failed (Pilot relay contacts did not close or the relay coil in electric heat did not energizing) |
| E 352 | Heat section / Stage 2 failed. |
| E 353 | Heat section / Stage 3 failed. |
| E 354 | Heat section / Stage 4 failed. |
| E 355 | Heat section / Stage 5 failed. |
| E 420 | Defrost out-of-control |
| Error codes 401 through 409 are only displayed when the Control's L terminal is connected to a non-communicating outdoor unit's LSOM device.. | |
| E 401 | Compressor ran more than 18 hours in air conditioning mode. |
| E 402 | Compressor system pressure trip. |
| E 403 | Compressor short-cycling - running less than four minutes. |
| E 404 | Compressor rotor locked. |
| E 405 | Compressor open circuit. |
| E 406 | Compressor open start circuit. |
| E 407 | Compressor open run circuit. |
| E 408 | Compressor contactor is welded. |
| E 409 | Compressor low voltage. |
| ** Cutback Mode — The variable speed motor has pre-set speed and torque limiters to protect the motor from damage caused by operating out of its designed parameters (0 through 0.80 in. w.g. total external static pressure). | |

## Target CFM Tables

**CBX32MV-018/024** BLOWER PERFORMANCE — 0 through 0.80 in. w.g. (0 through 200 Pa) External Static Pressure Range

| ADJUST Jumper Setting | Jumper Speed Positions | | | | | | | | | | | | | | | |
|---|---|---|---|---|---|---|---|---|---|---|---|---|---|---|---|---|
| | HEAT Speed | | | | | | | | COOL Speed | | | | | | | |
| | 1 | | 2 | | 3 | | 4 | | 1 | | 2 | | 3 | | 4 | |
| | cfm | L/s | cfm | L/s | cfm | L/s | cfm | L/s | cfm | L/s | cfm | L/s | cfm | L/s | cfm | L/s |
| + | 715 | 337 | 855 | 405 | 1000 | 470 | 1130 | 535 | 465 | 220 | 690 | 325 | 900 | 425 | 1050 | 495 |
| NORM | 670 | 315 | 770 | 365 | 900 | 425 | 1035 | 490 | 425 | 200 | 620 | 290 | 825 | 390 | 950 | 450 |
| - | 580 | 275 | 700 | 330 | 800 | 375 | 930 | 440 | 385 | 180 | 560 | 265 | 735 | 345 | 850 | 400 |

**CBX32MV-024/030** BLOWER PERFORMANCE — 0 through 0.80 in. w.g. (0 through 200 Pa) External Static Pressure Range

| ADJUST Jumper Setting | Jumper Speed Positions | | | | | | | | | | | | | | | |
|---|---|---|---|---|---|---|---|---|---|---|---|---|---|---|---|---|
| | HEAT Speed | | | | | | | | COOL Speed | | | | | | | |
| | 1 | | 2 | | 3 | | 4 | | 1 | | 2 | | 3 | | 4 | |
| | cfm | L/s | cfm | L/s | cfm | L/s | cfm | L/s | cfm | L/s | cfm | L/s | cfm | L/s | cfm | L/s |
| + | 800 | 380 | 935 | 440 | 1070 | 505 | 1210 | 570 | 660 | 310 | 880 | 415 | 1100 | 520 | 1320 | 625 |
| NORM | 725 | 340 | 850 | 400 | 975 | 460 | 1100 | 520 | 600 | 285 | 800 | 380 | 1000 | 470 | 1200 | 565 |
| - | 655 | 310 | 765 | 360 | 880 | 415 | 990 | 470 | 540 | 255 | 720 | 340 | 900 | 425 | 1080 | 510 |

**CBX32MV-036** BLOWER PERFORMANCE — 0 through 0.80 in. w.g. (0 through 200 Pa) External Static Pressure Range

| ADJUST Jumper Setting | Jumper Speed Positions | | | | | | | | | | | | | | | |
|---|---|---|---|---|---|---|---|---|---|---|---|---|---|---|---|---|
| | HEAT Speed | | | | | | | | COOL Speed | | | | | | | |
| | 1 | | 2 | | 3 | | 4 | | 1 | | 2 | | 3 | | 4 | |
| | cfm | L/s | cfm | L/s | cfm | L/s | cfm | L/s | cfm | L/s | cfm | L/s | cfm | L/s | cfm | L/s |
| + | 1230 | 580 | 1335 | 630 | 1445 | 680 | 1545 | 730 | 1090 | 515 | 1225 | 580 | 1380 | 650 | 1545 | 730 |
| NORM | 1120 | 530 | 1215 | 575 | 1315 | 620 | 1400 | 660 | 975 | 460 | 1125 | 530 | 1275 | 600 | 1400 | 660 |
| - | 1010 | 475 | 1185 | 560 | 1200 | 565 | 1265 | 595 | 900 | 425 | 1000 | 470 | 1135 | 535 | 1265 | 595 |

**CBX32MV-048 AND CBX32MV-060** BLOWER PERFORMANCE — 0 through 0.80 in. w.g. (0 Through 200 Pa) External Static Pressure Range

| ADJUST Jumper Setting | Jumper Speed Positions | | | | | | | | | | | | | | | |
|---|---|---|---|---|---|---|---|---|---|---|---|---|---|---|---|---|
| | HEAT Speed | | | | | | | | COOL Speed | | | | | | | |
| | 1 | | 2 | | 3 | | 4 | | 1 | | 2 | | 3 | | 4 | |
| | cfm | L/s | cfm | L/s | cfm | L/s | cfm | L/s | cfm | L/s | cfm | L/s | cfm | L/s | cfm | L/s |
| + | 1850 | 875 | 1960 | 925 | 2090 | 985 | 2150 | 1015 | 1625 | 765 | 1820 | 860 | 2055 | 970 | 2145 | 1010 |
| NORM | 1705 | 805 | 1800 | 850 | 1900 | 895 | 2005 | 945 | 1425 | 670 | 1625 | 765 | 1805 | 850 | 2005 | 945 |
| - | 1560 | 735 | 1625 | 765 | 1720 | 810 | 1770 | 835 | 1205 | 570 | 1375 | 650 | 1555 | 735 | 1725 | 815 |

**CBX32MV-068** BLOWER PERFORMANCE — 0 through 0.80 in. w.g. (0 Through 200 Pa) External Static Pressure Range

| ADJUST Jumper Setting | Jumper Speed Positions | | | | | | | | | | | | | | | |
|---|---|---|---|---|---|---|---|---|---|---|---|---|---|---|---|---|
| | HEAT Speed | | | | | | | | COOL Speed | | | | | | | |
| | 1 | | 2 | | 3 | | 4 | | 1 | | 2 | | 3 | | 4 | |
| | cfm | L/s | cfm | L/s | cfm | L/s | cfm | L/s | cfm | L/s | cfm | L/s | cfm | L/s | cfm | L/s |
| **+** | 1875 | 885 | 1975 | 930 | 2090 | 985 | 2150 | 1015 | 1640 | 775 | 1840 | 870 | 2075 | 980 | 2150 | 1015 |
| **NORM** | 1760 | 830 | 1825 | 860 | 1920 | 905 | 2030 | 960 | 1465 | 690 | 1625 | 765 | 1800 | 850 | 2000 | 945 |
| **-** | 1550 | 730 | 1650 | 780 | 1725 | 815 | 1800 | 850 | 1250 | 590 | 1390 | 655 | 1560 | 735 | 1720 | 810 |

NOTES - The effect of static pressure, filter and electric heater resistance is included in the air volumes listed.
First stage cooling air volume is 70% of COOL speed setting. Continuous blower speed is approximately 50% of COOL speed setting.
Lennox Harmony III™ Zone Control applications - minimum blower speed is 300 cfm (145 L/s)

## Unit Operating Sequences

This section details unit operating sequence for non-communicating systems.

*NOTE* - For communicating systems, see the icomfort Touch™ thermostat installation instruction.

**Table 13. CBX32MV with ComfortSense™ 7000 Thermostat and Single-Stage Outdoor Unit Operating Sequence**

| Operating Sequence | | System Demand | | | | | | | | System Response | | |
|---|---|---|---|---|---|---|---|---|---|---|---|---|
| System Condition | Step | Thermostat Demand | | | | | | Relative Humidity | | Comp | Air Handler CFM (COOL) | Comments |
| | | Y1 | Y2 | O | G | W1 | W2 | Status | D | | | |
| **NO CALL FOR DEHUMIDIFICATION** | | | | | | | | | | | | |
| Normal Operation | 1 | On | | On | On | | | Acceptable | 24 VAC | High | 100% | Compressor and indoor air handler follow thermostat demand |
| **BASIC MODE (Only active on a Y1 thermostat demand)** | | | | | | | | | | | | |
| Normal Operation | 1 | On | | On | On | | | Acceptable | 24 VAC | High | 100% | ComfortSense™ 7000 thermostat energizes Y1 and de-energizes D on a call for dehumidification. *NOTE - No over cooling.* |
| Dehumidification Call | 2 | On | | On | On | | | Demand | 0 VAC | High | 70% | |
| **PRECISION MODE (Operates independent of a Y1 thermostat demand)** | | | | | | | | | | | | |
| Normal Operation | 1 | On | | On | On | | | Acceptable | 24 VAC | High | 100% | Dehumidification mode begins when humidity is greater than set point |
| Dehumidification call | 2 | On | | On | On | | | Demand | 0 VAC | High | 70% | |
| Dehumidification call ONLY | 1 | On | | On | On | | | Demand | 0 VAC | High | 70% | ComfortSense™ 7000 will keep outdoor unit energized after cooling temperature setpoint has been reach in order to maintain room humidity setpoint. *NOTE - Allow to over cool 2$^0$F from cooling set point.* |

## Table 14. CBX32MV with ComfortSense™ 7000 Thermostat and Two-Stage Outdoor Unit Operating Sequence

| Operating Sequence | | System Demand | | | | | | | | System Response | | |
|---|---|---|---|---|---|---|---|---|---|---|---|---|
| | | Thermostat Demand | | | | | | Relative Humidity | | | | |
| System Condition | Step | Y1 | Y2 | O | G | W1 | W2 | Status | D | Compressor | Air Handler CFM (COOL) | Comments |
| **No Call for Dehumidification** | | | | | | | | | | | | |
| Normal Operation - Y1 | 1 | On | | On | On | | | Acceptable | 24 VAC | Low | 70% | Compressor and indoor air handler follow thermostat demand |
| Normal Operation - Y2 | 2 | On | On | On | On | | | Acceptable | 24 VAC | High | 100% | |
| **Room Thermostat Calls for First-Stage Cooling** | | | | | | | | | | | | |
| **BASIC MODE (Only active on a Y1 thermostat demand)** | | | | | | | | | | | | |
| Normal Operation | 1 | On | | On | On | | | Acceptable | 24 VAC | Low | 70% | ComfortSense™ 7000 thermostat energizes Y2 and de-energizes D on a call for dehumidification *NOTE - No over cooling.* |
| Dehumidification Call | 2 | On | On | On | On | | | Demand | 0 VAC | High | 70% | |
| **PRECISION MODE (Operates independent of a Y1 thermostat demand)** | | | | | | | | | | | | |
| Normal Operation | 1 | On | | On | On | | | Acceptable | 24 VAC | Low | 70% | Dehumidification mode begins when humidity is greater than set point |
| Dehumidification call | 2 | On | On | On | On | | | Demand | 0 VAC | High | 70% | |
| Dehumidification call ONLY | 1 | On | On | On | On | | | Demand | 0 VAC | High | 70% | ComfortSense™ 7000 thermostat will keep outdoor unit energized after cooling temperature setpoint has been reached in order to maintain room humidity setpoint. *NOTE — Allow to over cool 2$^0$F from cooling set point.* |
| **Room Thermostat Calls for First- and Second-Stage Cooling** | | | | | | | | | | | | |
| **BASIC MODE (Only active on a Y1 thermostat demand)** | | | | | | | | | | | | |
| Normal Operation | 1 | On | On | On | On | | | Acceptable | 24 VAC | High | 100% | ComfortSense™ 7000 thermostat energizes Y2 and de-energizes D on a call for dehumidification *NOTE — No over cooling.* |
| Dehumidification Call | 2 | On | On | On | On | | | Demand | 0 VAC | High | 70% | |
| **PRECISION MODE (Operates independent of a Y1 thermostat demand)** | | | | | | | | | | | | |
| Normal Operation | 1 | On | On | On | On | | | Acceptable | 24 VAC | High | 100% | Dehumidification mode begins when humidity is greater than set point |
| Dehumidification call | 2 | On | On | On | On | | | Demand | 0 VAC | High | 70% | |
| Dehumidification call ONLY | 1 | On | On | On | On | | | Demand | 0 VAC | High | 70% | ComfortSense™ 7000 thermostat will keep outdoor unit energized after cooling temperature setpoint has been reached in order to maintain room humidity setpoint. *NOTE — Allow to over cool 2$^0$F from cooling set point.* |

## Configuring Unit

This section identifies the requirements for configuring the air handler unit for unit size, heat mode selection and EvenHeat.

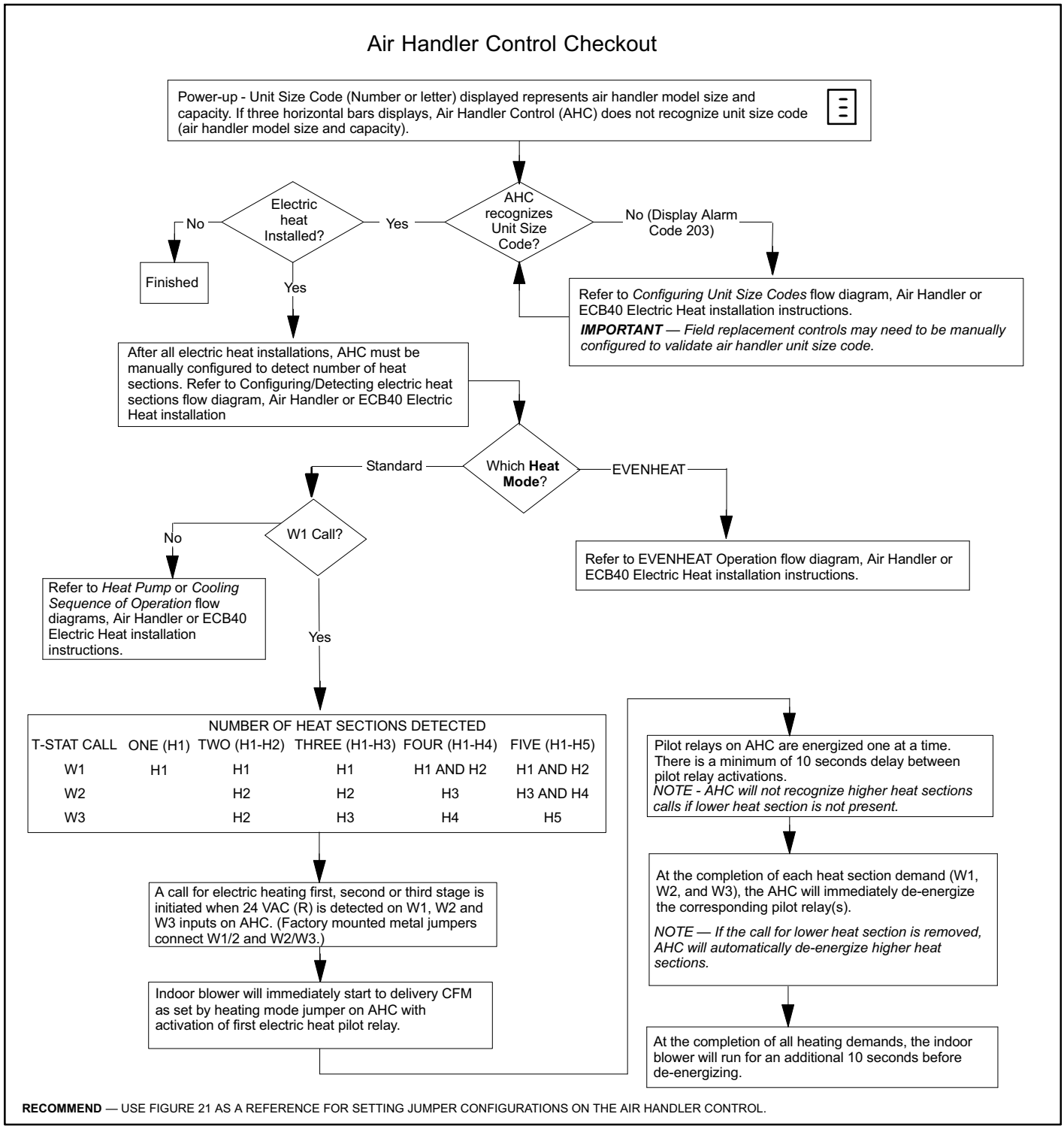


**Figure 22. Air Handler Control Checkout**

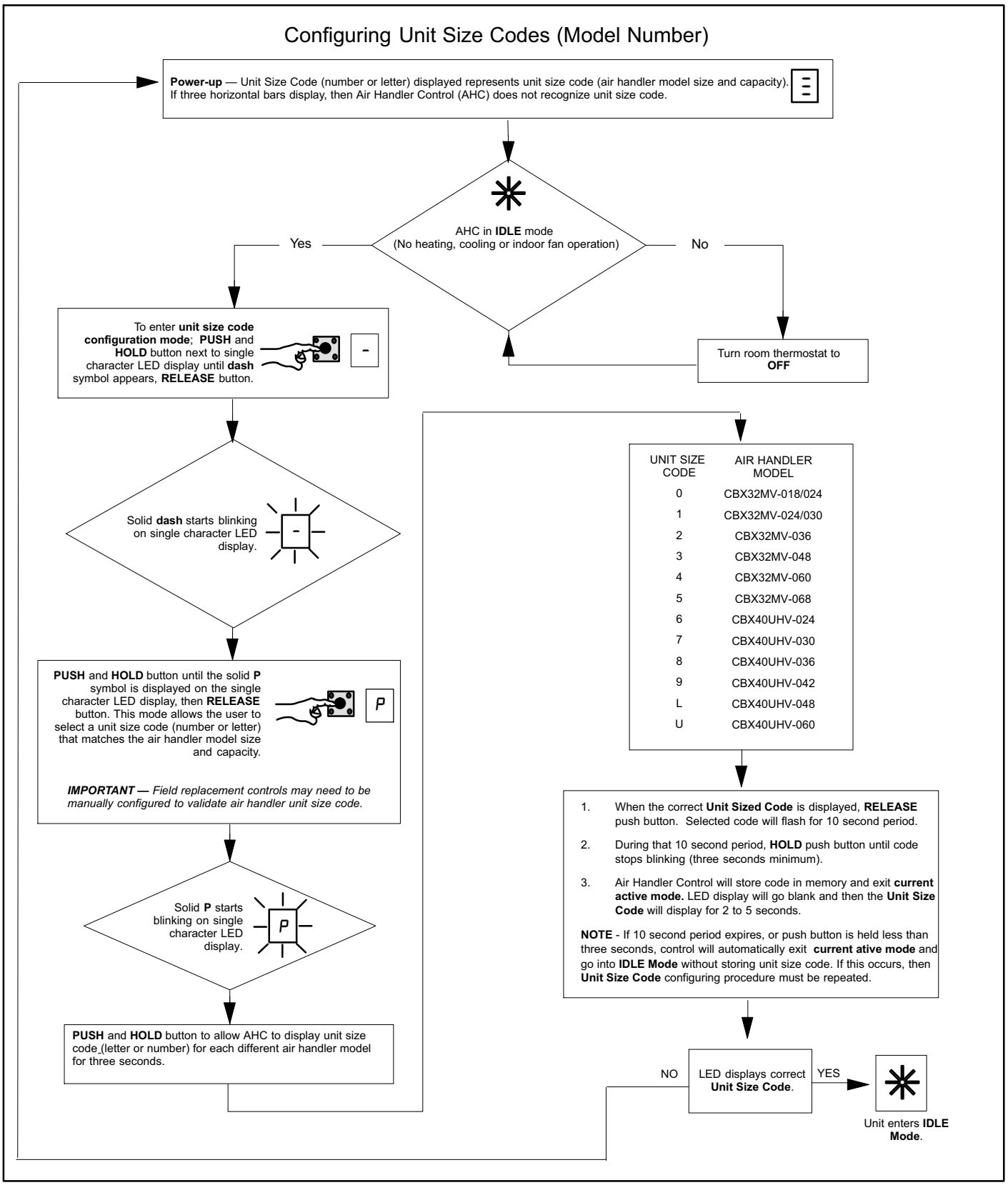


**Figure 23. Configure Unit Size Codes**

## Configuring/Detecting Electric Heat Sections

**IMPORTANT** — All electric heat installations require the Air Handler Control (AHC) to be manually configured to detect number of heat sections.

*NOTE — All field replacement AHC will require configuring/detecting electric heat sections.*

**RECOMMEND** — USE FIGURE 21 AS A REFERENCE FOR SETTING JUMPER CONFIGURATIONS ON THE AIR HANDLER CONTROL.

Which Heat Mode?

**Standard**

- Set desired **Heating Mode Blower Speed** jumper pin.
- Electric heat is stages by room thermostat. (AHC comes with factory jumper between W1 to W2 and W2 to W3)
- Refer to Air Handler Control Checkout flow diagram for operation.

**EVENHEAT**

- Set desired **Heating Mode Blower Speed** jumper pin.
- Install and wire discharge air temperature sensor.
- Set desired **Target Discharge Temperature** jumper pin. If jumper pin is missing or discharge air temperature sensor is not detected, AHC defaults to **Standard Heat Mode**. Target settings are 85, 100, 115 and 130ºF) .
- Refer to **EVENHEAT Operation** flow diagram for operation.

Configuration

AHC in **Idle Mode** (No heating cooling or indoor fan operation)

**Yes**

To enter **electric heat mode configuration**, push and hold button next to single character LED display until **dash** symbol (solid bar) appears, then release button.

Solid **dash** starts blinking on single character LED display

Push and hold button until the solid **H** symbol is displayed on the single character LED display, then release button.

**No**

Turn room thermostat to **OFF**.

1. AHC will start the indoor blower motor to the selected heat jumper speed setting and cycle the electric heat relays ON to automatically detect number of electric heat sections. (Electric heat section may be wired to energize more than one element)
2. AHC waits for maximum of ten seconds to detect electric heat 22 volt DC relay coils are energizing:
   - A <u>If relay coil current is detected within ten seconds,</u> AHC will show a **1** on the single character LED display indicating that the first stage has been detected. As each additional heat section is detected, single character LED display on the AHC will display that electric element number. (Example: Last number displayed by the single character LED display is 3, the AHC is configured to operate three electric heat sections.)
   - B <u>If relay coil current is not detected within ten seconds,</u> the AHC will exit the current active mode and resume operation with electric heat disabled.
3. AHC will automatically exit **current configuration mode** when configuration is completed. To verify that the number of electric sections detected matches the installed electric heat package, the field MUST CONFIRM that the last number the single character LED display before exiting the Configuring/Detection Mode matches the number of installed electric heat sections. AHC stores the number of electric heat stages in non-volatile memory.
4. After the detection is finished, unit will continue to operate for an additional 30 seconds.

*NOTE — If AHC push button is pushed or power is cycled on AHC is unable to verify all 22 volt DC electric heat relay(s) were energized using electric heater detection, configuration will be stopped. Configuration function must be repeated.*

Finished

**Figure 24. Heat Mode Selection**

## EVENHEAT OPERATION

| INPUTS | OUTPUTS | | |
|---|---|---|---|
| **Room Thermostat Demand** | **Target Discharge Air Temperature Set at 85ºF** | **Target Discharge Air Temperature Set at 100ºF** | **Target Discharge Air Temperature Set at 115ºF/130ºF** |
| Y1 | Heat Pump First Stage | Heat Pump First Stage | Heat Pump First + First Electric Heat Section (H1) |
| Y1 + Y2 | Heat Pump First and Second Stage | Heat Pump First and Second Stage + First Electric Heat Section (H1) | Heat Pump First and Second Stage + First Electric Heat Section (H1) + Second Electric Heat Section (H2) if number of electric heater sections detected is more than two. |
| Y1 + W1 and/or W2 | Heat Pump First Stage + First Electric Heat Section (H1) | Heat Pump First Stage + First Electric Heat Section + Second Electric Heat Section (H2) if number of electric heater sections detected is more than two. | Heat Pump First Stage + First Electric Heat Section (H1) Second Electric Heat Section (H2) if number of electric heater sections detected is more than two. |
| Y1 and Y2 + W1 and/or W2 | Heat Pump First and Second Stage+ First Electric Heat Section (H1) | Heat Pump First and Second Stage + First Electric Heat Section + Second Electric Heat Section (H2) if number of electric heater sections detected is more than two. | Heat Pump First and Second Stage + First Electric Heat Section (H1) Second Electric Heat Section (H2) if number of electric heater sections detected is more than two. |
| W1 and/or W2 | First Electric Heat Section (H1) | First Electric Heat Section (H1) + Second Electric Heat Section (H2) if number of electric heater sections detected is more than two. | First Electric Heat Section (H1) + Second Electric Heat Section (H2) if number of electric heater sections detected is more than two. |

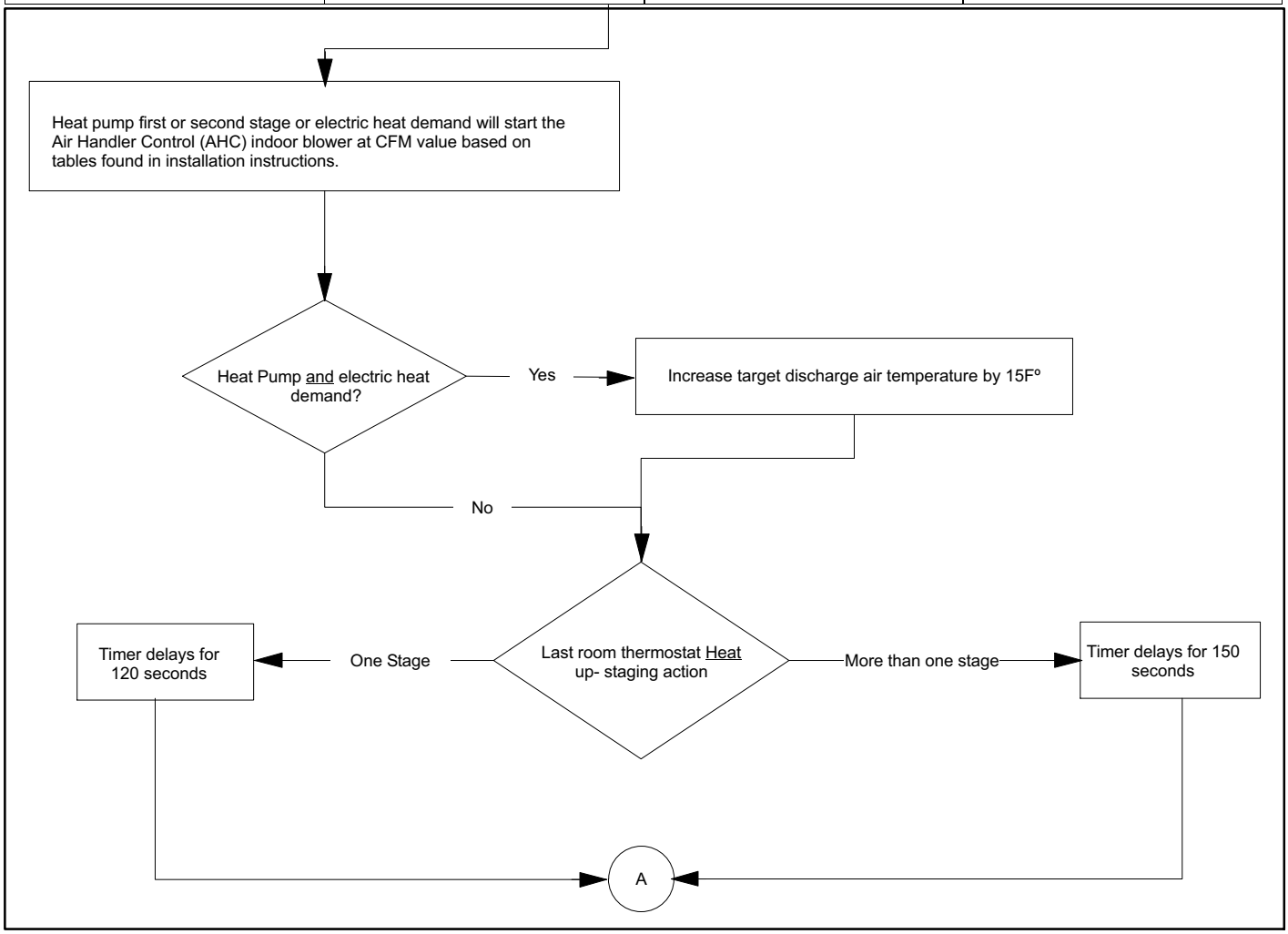


**Figure 25. EVENHEAT Operation (1 of 2)**

*Note 1 Activation delay*

- 120 seconds if one heat stage is or deactivated
- 150 seconds if more than one stage is activated or deactivated.

## EVENHEAT Operation

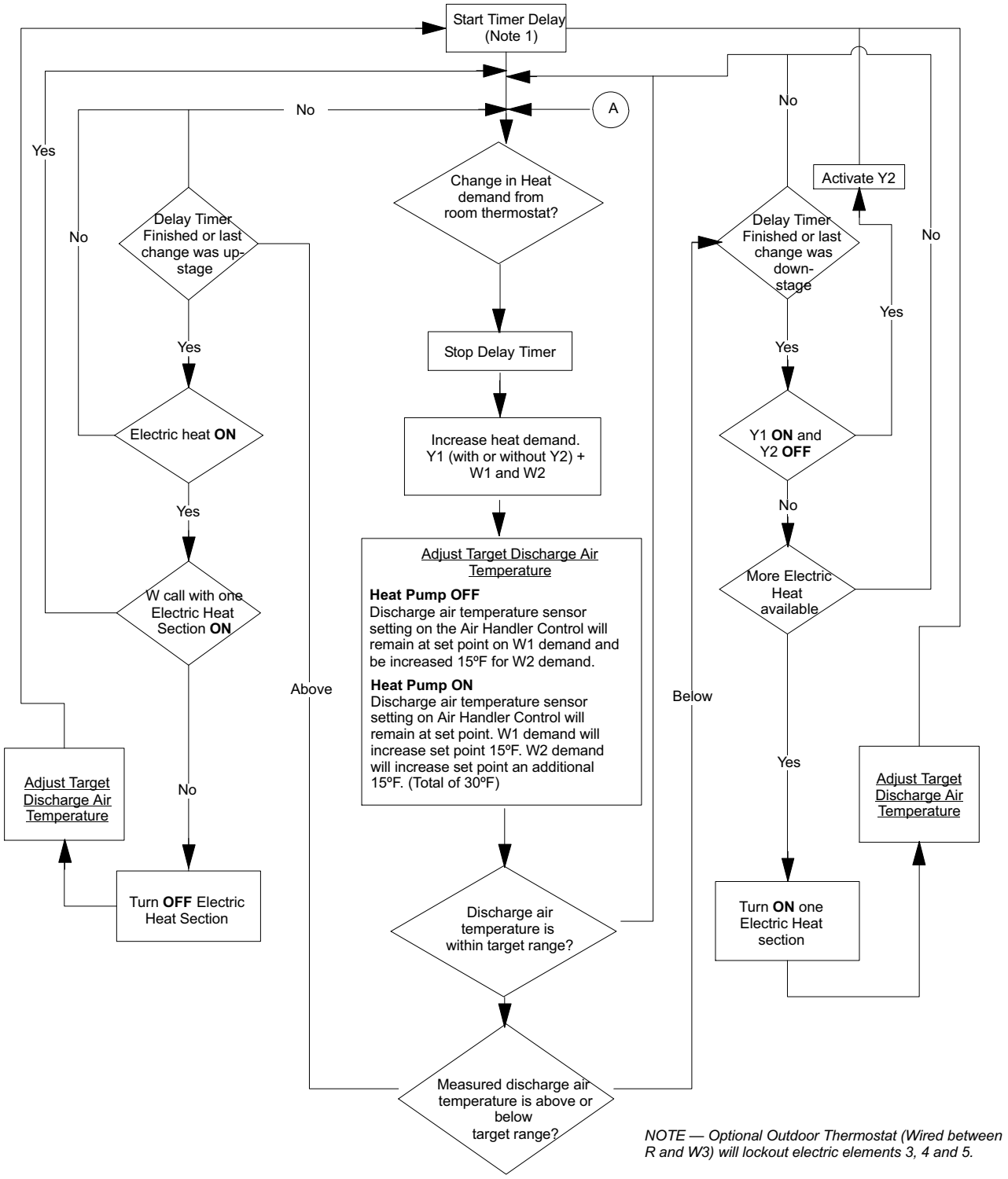


**Figure 26. EVENHEAT Operation (2 of 2)**

# Heat Pump Operation (Heating and Cooling)

Air Handler Control AHC) Indoor Blower Mode Speed and Profiles settings

1. Set **Cooling Mode Blower Speed** jumper pin . (Low and high indoor blower CFM settings are identical for cooling and heat pump)
2. Set Blower Adjust Selection jumper pin.
3. Set Cooling Mode Blower Ramping jumper pin (Cooling calls - All ramping profiles are active) (Heating calls - Only ramping profiles 1 and 2 are active. If profiles 3 or 4 are selected, AHC will default to profile 1)
   - A Profile 1 does not provide any ramping profiles.
   - B Profile 2 provides a 30 second indoor blower ON delay at the start of a heat pump heating demand. (45 second indoor blower **OFF** delay)
4. Simultaneous Heat Pump and electric heat call: Indoor Blower will operate at the highest CFM requested by the heat pump or the electric heat blower speed selection.

Single or Two-Stage Unit

1. AHC on-AHC link must be cut between Y1 and Y2 to allow two stage cooling operation.
2. AHC on-AHC link must be cut between R and O to allow heat pump operation.

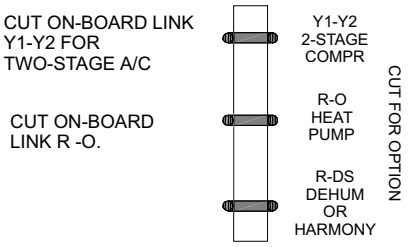


**IMPORTANT** — USE CARE WHEN CUTTING LINKS TO PREVENT DAMAGE TO CONTROL. SEE FIGURE 21, CBX32MV JUMP AND LINK GUIDE FOR FURTHER DETAILS.

**RECOMMEND** — USE FIGURE 21 AS A REFERENCE FOR SETTING JUMPER CONFIGURATIONS ON THE AIR HANDLER CONTROL.

Room thermostat calls for first stage?

**Heating**

Air Handler Control (AHC) receives inputs on Y1 terminal.

Y1 terminal on AHC is configured as input and passes signal from room thermostat to outdoor unit.
*NOTE — The outdoor unit control directly controls the outdoor unit operation.*

Y1 input to the AHC will control the indoor blower according to the cooling or heating mode blower speed, ramping and adjust selection jumper pins.

**Cooling**

Air Handler Control (AHC) receives inputs on Y1 and O terminals.

Y1 terminal on AHC is configured as input and passes signal from room thermostat to outdoor unit.
*NOTE — The outdoor unit control directly controls the outdoor unit operation.)*

Y1 input to the AHC. Will control the indoor blower according to the cooling mode blower speed, ramping and adjust selection jumper pins.

Yes

Room thermostat calls for second stage?

Yes

Y2 terminal on AHC is configured as input and passes signal from room thermostat to outdoor unit.
*NOTE — The outdoor unit control directly controls the outdoor unit operation.)*

Yes

Y2 terminal is an input to the AHC. The indoor blower will be controlled according to the jumper pin selections.

Still calling for second stage?

Yes

No

No

De-energize Y2 terminal on AHC. Indoor blower speed will reset to Y1 demand.
*NOTE — The outdoor unit control directly controls the outdoor unit operation.)*

Still calling for first stage?

Yes

No

De-energize Y1 (and O in cooling) terminals on AHC.
*NOTE — The outdoor unit control directly controls the outdoor unit operation.*

De-energize indoor blower per ramping profile.

## Cooling Operation

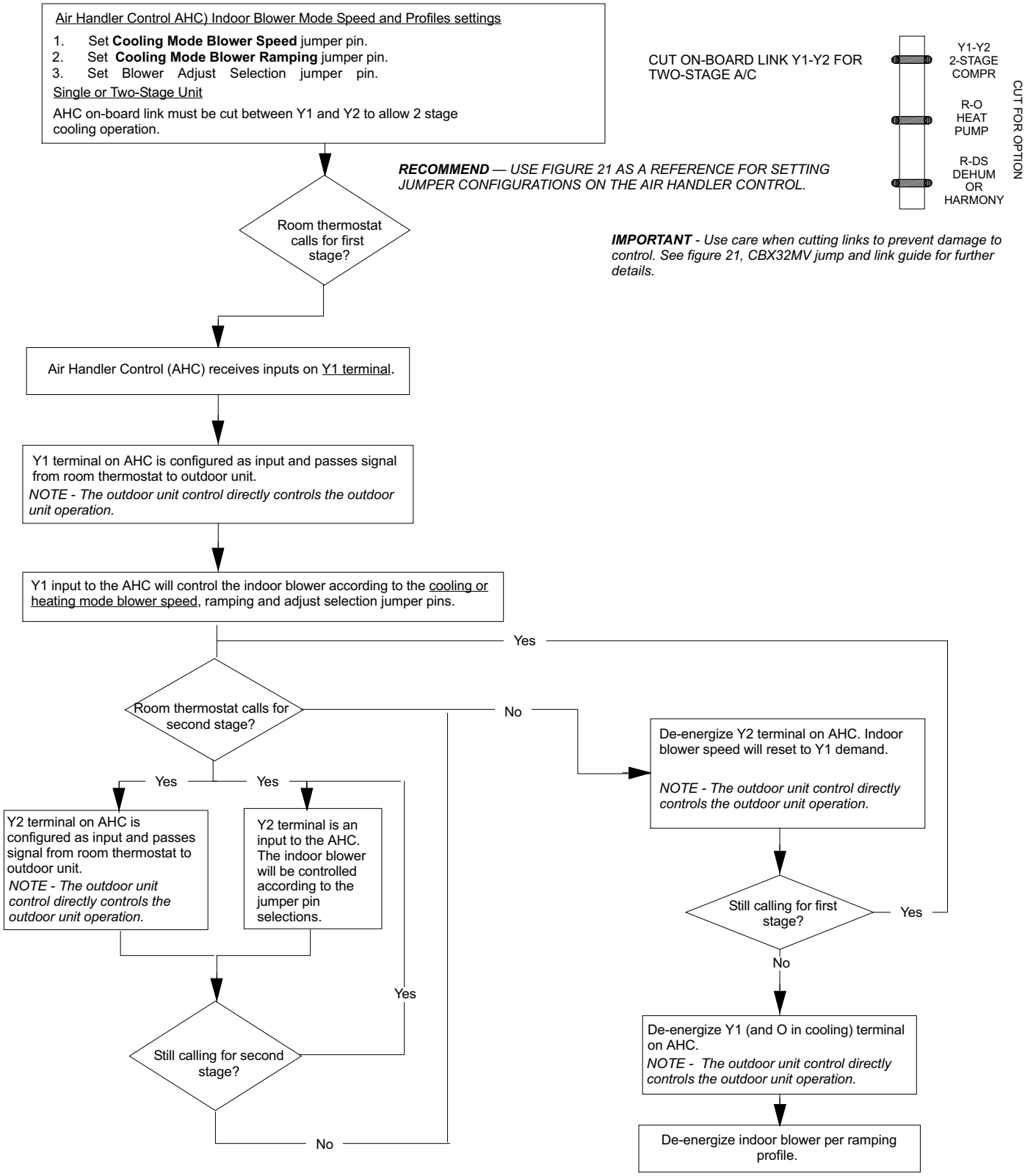

## Error Code / Recall Mode

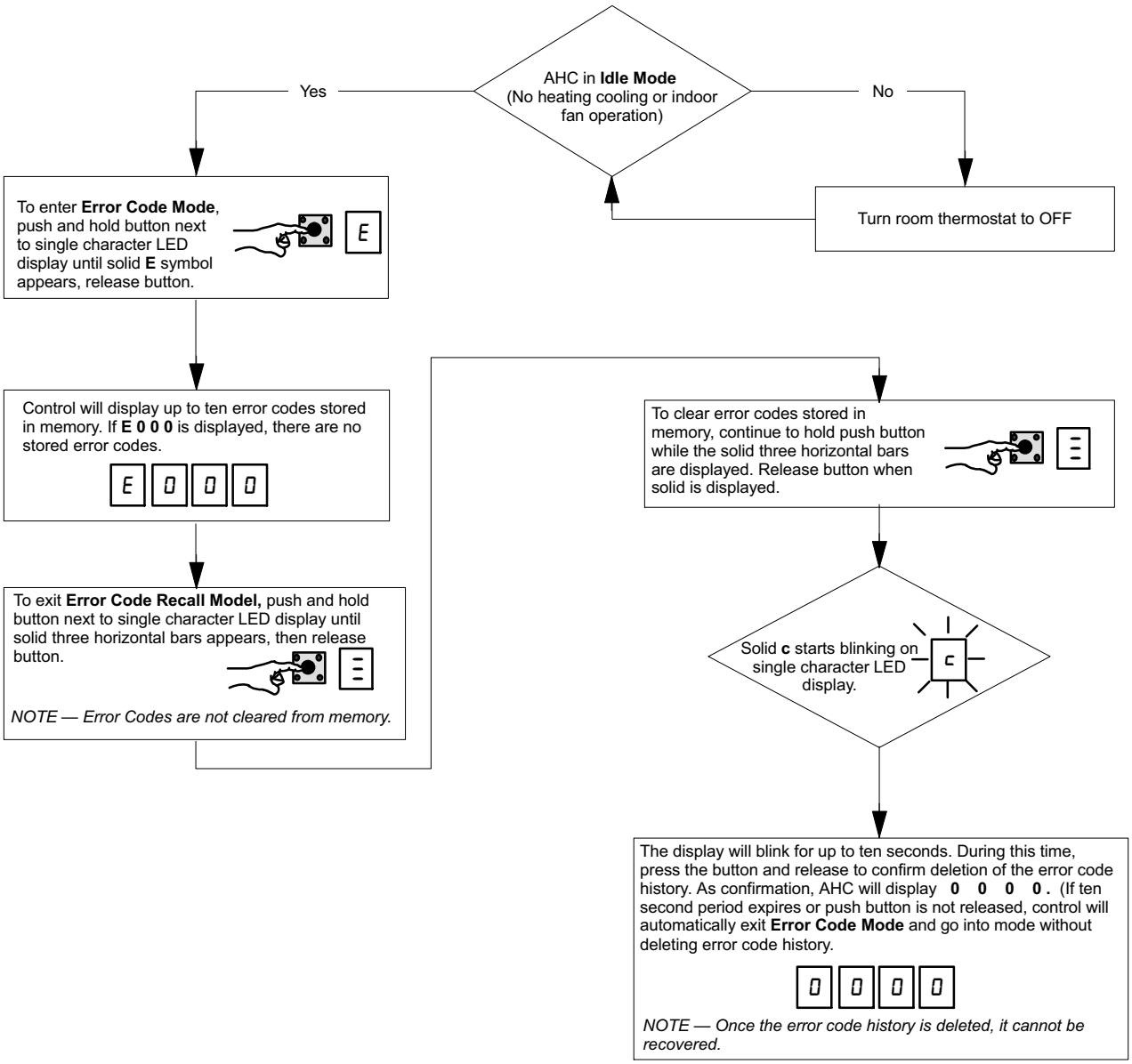

## Indoor Blower Test

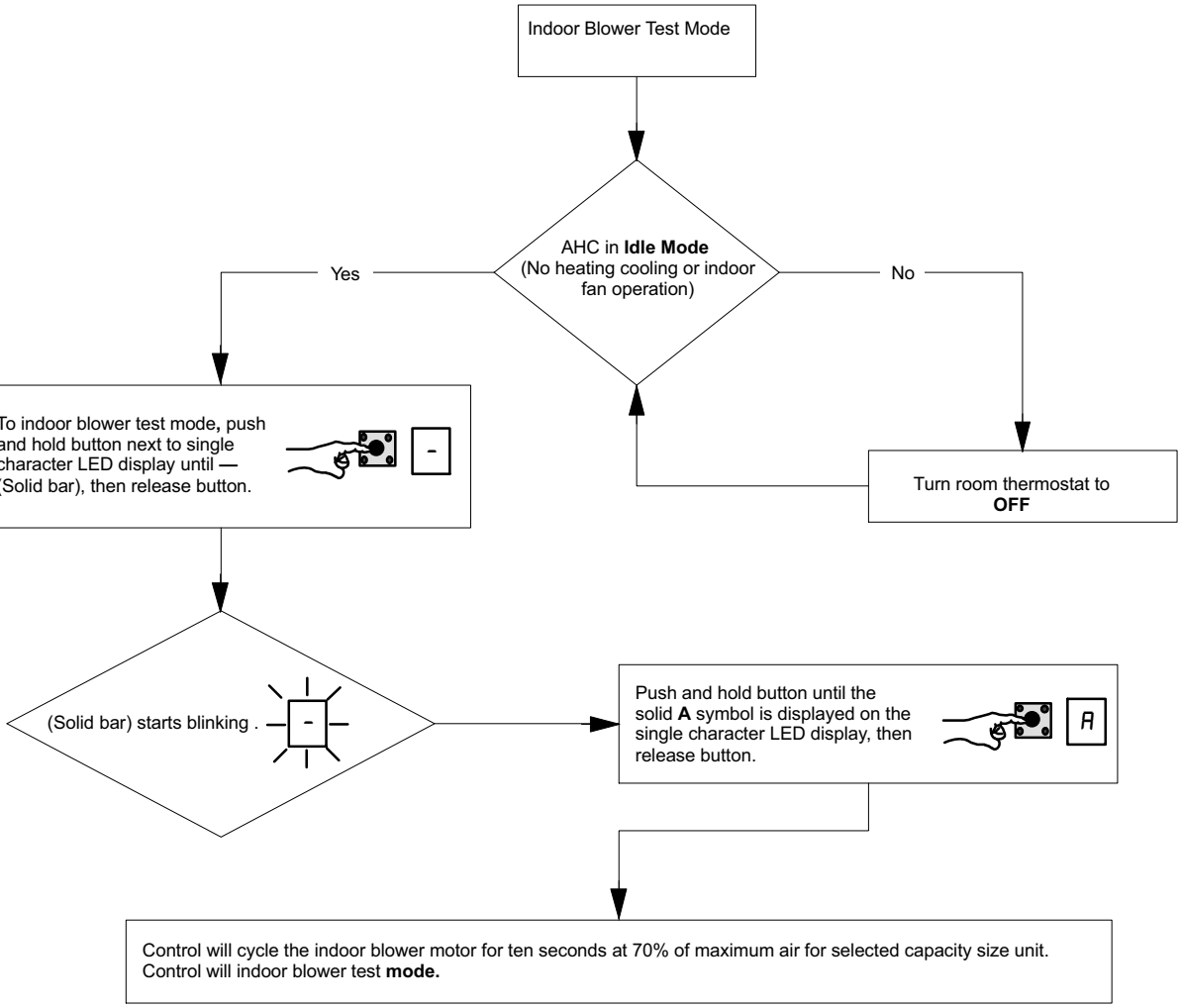


## Checkout Procedures

*NOTE - Refer to outdoor unit installation instructions for system start-up instructions and refrigerant charging instructions.*

**PRE-START-UP CHECKS**

- Is the air handler properly and securely installed?
- If horizontally configured, is the unit sloped up to 1/4 inch toward drain lines?
- Will the unit be accessible for servicing?
- Has an auxiliary pan been provided under the unit with separate drain for units installed above a finished ceiling or in any installation where condensate overflow could cause damage?
- Have ALL unused drain pan ports been properly plugged?
- Has the condensate line been properly sized, run, trapped, pitched, and tested?
- Is the duct system correctly sized, run, sealed, and insulated?
- Have all cabinet openings and wiring been sealed?
- Is the indoor coil factory-installed TXV properly sized for the outdoor unit being used?
- Have all unused parts and packaging been disposed of?
- Is the filter clean, in place, and of adequate size?
- Is the wiring neat, correct, and in accordance with the wiring diagram?
- Is the unit properly grounded and protected (fused)?
- Is the thermostat correctly wired and in a good location?
- Are all access panels in place and secure?

**CHECK BLOWER OPERATION**

- Set thermostat to FAN ON.
- The indoor blower should come on.

**CHECK COOLING OPERATION**

- Set thermostat to force a call for cooling (approximately 5ºF lower than the indoor ambient temperature).

- The outdoor unit should come on immediately and the indoor blower should start between 30 - 60 seconds later.
- Check the airflow from a register to confirm that the system is moving cooled air.
- Set the thermostat 5ºF higher than the indoor temperature. The indoor blower and outdoor unit should cycle off.

**CHECK ELECTRIC HEATER (IF USED)**

- Set thermostat to call for auxiliary heat (approximately 5°F above ambient temperature). The indoor blower and auxiliary heat should come on together. Allow a minimum of 3 minutes for all sequencers to cycle on.
- Set the thermostat so that it does not call for heat. Allow up to 5 minutes for all sequencers to cycle off.

## Operation

**COOLING (COOLING ONLY OR HEAT PUMP)**

When the thermostat calls for cooling, 24 volts is put on the blower time-delay relay coil. After a delay, the indoor blower relay energizes. The normally open contacts close, causing the indoor blower motor to operate. The circuit between R and Y is completed, closing the circuit to the contactor in the outdoor unit, starting the compressor and outdoor fan motor.

On heat pumps, circuit R and O energizes the reversing valve, switching the valve to the cooling position. (The reversing valve remains energized as long as the thermostat selector switch is in the COOL position.)

At the completion of the cooling demand and after the relay's time-delay, the compressor and outdoor fan will cycle off.

**HEATING (ELECTRIC HEAT ONLY)**

When the thermostat calls for heat, the circuit between R and W is completed, and the heat sequencer is energized. A time delay follows before the heating elements and the indoor blower motor come on. Units with a second heat sequencer can be connected with the first sequencer to W on the thermostat subbase, or they may also be connected to a second stage on the subbase.

**HEATING (HEAT PUMP)**

When the thermostat calls for heating, 24 volts is put on the blower time-delay relay coil. After a delay, the normally open contacts close, causing the indoor blower motor to operate. The circuit between R and Y is completed, closing the circuit to the contactor in the outdoor unit, starting the compressor and outdoor fan motor. Circuit R and G energizes the blower relay, starting the indoor blower motor.

If the room temperature should continue to fall, the circuit between R and W1 is completed by the second-stage heat room thermostat. Circuit R-W1 energizes a heat sequencer. The completed circuit will energize supplemental electric heat (if applicable). Units with a second heat sequencer can be connected with the first sequencer to W1 on the thermostat. They may also be connected to a second heating stage W2 on the thermostat subbase.

**EMERGENCY HEAT (HEATING HEAT PUMP)**

If the selector switch on the thermostat is set to the emergency heat position, the heat pump will be locked out of the heating circuit, and all heating will be electric heat (if applicable). A jumper should be placed between W2 and E on the thermostat subbase so that the electric heat control will transfer to the first-stage heat on the thermostat. This will allow the indoor blower to cycle on and off with the electric heat when the fan switch is in the AUTO position.

## Maintenance

### DEALER

**⚠ WARNING**

Electric shock hazard. Can cause injury or death. Before attempting to perform any service or maintenance, turn the electrical power to unit OFF at disconnect switch(es). Unit may have multiple power supplies.

**⚠ WARNING**

Improper installation, adjustment, alteration, service or maintenance can cause personal injury, loss of life, or damage to property.

Installation and service must be performed by a licensed professional installer (or equivalent) or a service agency.

Maintenance and service must be performed by a qualified installer or service agency. At the beginning of each cooling season, the system should be checked as follows:

**Outdoor Unit**

1. Outdoor unit fan motor is pre-lubricated and sealed. No further lubrication is needed.
2. Visually inspect all connecting lines, joints and coils for evidence of oil leaks.
3. Check all wiring for loose connections.
4. Check for correct voltage at unit (unit operating).
5. Check amp draw on outdoor fan motor.

   **Motor Nameplate**:_____ **Actual**:_____.
6. Inspect drain holes in coil compartment base and clean if necessary.

*NOTE - If insufficient cooling occurs, the unit should be gauged and refrigerant charge should be checked.*

**Outdoor Coil**

Clean and inspect outdoor coil (may be flushed with a water hose). Ensure power is off before cleaning.

*NOTE — It may be necessary to flush the outdoor coil more frequently if it is exposed to substances which are corrosive or which block airflow across the coil (e.g., pet urine, cottonwood seeds, fertilizers, fluids that may contain high levels of corrosive chemicals such as salts)*

**Sea Coast** — Moist air in ocean locations can carry salt, which is corrosive to most metal. Units that are located near the ocean require frequent inspections and maintenance. These inspections will determine the necessary need to wash the unit including the outdoor coil. Consult your installing contractor for proper intervals/procedures for your geographic area or service contract.

### Indoor Unit

1. Clean or change filters.
2. Lennox blower motors are prelubricated and permanently sealed. No more lubrication is needed.
3. Adjust blower speed for cooling. Measure the pressure drop over the coil to determine the correct blower CFM. Refer to the unit information service manual for pressure drop tables and procedure.
4. *Belt Drive Blowers* - Check belt for wear and proper tension.
5. Check all wiring for loose connections.
6. Check for correct voltage at unit. (blower operating)
7. Check amp draw on blower motor.

   **Motor Nameplate**:_____ **Actual**:_____.

### Indoor Coil

1. Clean coil if necessary.
2. Check connecting lines, joints and coil for evidence of oil leaks.
3. Check condensate line and clean if necessary.

### Cabinet Insulation

**⚠IMPORTANT**

DAMAGED INSULATION MUST BE REPAIRED OR REPLACED before the unit is put back into operation. Insulation loses its insulating value when wet, damaged, separated or torn.

Matt- or foil-faced insulation is installed in indoor equipment to provide a barrier between outside air conditions (surrounding ambient temperature and humidity) and the varying conditions inside the unit. If the insulation barrier is damaged (wet, ripped, torn or separated from the cabinet walls), the surrounding ambient air will affect the inside surface temperature of the cabinet. The temperature/humidity difference between the inside and outside of the cabinet can cause condensation on the inside or outside of the cabinet which leads to sheet metal corrosion and subsequently, component failure.

#### REPAIRING DAMAGED INSULATION

Areas of condensation on the cabinet surface are an indication that the insulation is in need of repair.

If the insulation in need of repair is otherwise in good condition, the insulation should be cut in an X pattern, peeled open, glued with an appropriate all-purpose glue and placed back against the cabinet surface, being careful to not overly compress the insulation so the insulation can retain its original thickness. If such repair is not possible, replace the insulation. If using foil-faced insulation, any cut, tear, or separations in the insulation surface must be taped with a similar foil-faced tape.

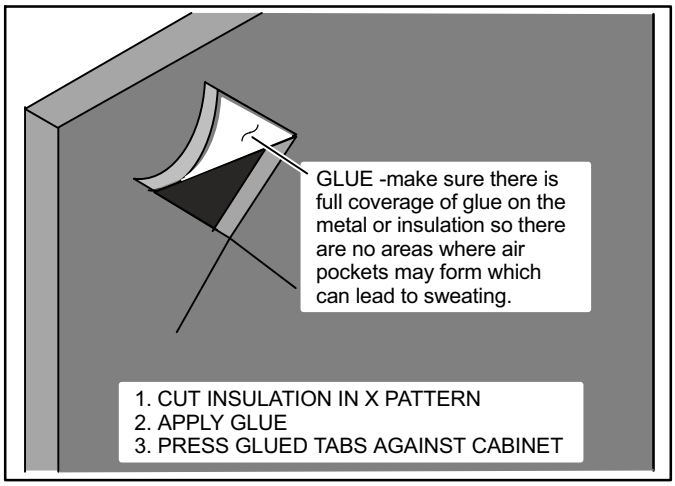


**Figure 27. Repairing Insulation**

**⚠WARNING**

Electric Shock Hazard.

Can cause injury or death.

Foil-faced insulation has conductive characteristics similar to metal. Be sure there are no electrical connections within a ½" of the insulation. If the foil-faced insulation comes in contact with electrical voltage, the foil could provide a path for current to pass through to the outer metal cabinet. While the current produced may not be enough to trip existing electrical safety devices (e.g. fuses or circuit breakers), the current can be enough to cause an electric shock hazard that could cause personal injury or death.

## HOMEOWNER

Cleaning of the outdoor unit's coil should be performed by a trained service technician. Contact your dealer and set up a schedule (preferably twice a year, but at least once a year) to inspect and service your outdoor unit. The following maintenance may be performed by the homeowner.

## ⚠ CAUTION

Physical contact with metal edges and corners while applying excessive force or rapid motion can result in personal injury. Be aware of, and use caution when working near these areas during installation or while servicing this equipment.

## ⚠ IMPORTANT

Sprinklers and soaker hoses should not be installed where they could cause prolonged exposure to the outdoor unit by treated water. Prolonged exposure of the unit to treated water (i.e., sprinkler systems, soakers, waste water, etc.) will corrode the surface of steel and aluminum parts and diminish performance and longevity of the unit.

### Outdoor Coil

The outdoor unit must be properly maintained to ensure its proper operation.

- Please contact your dealer to schedule proper inspection and maintenance for your equipment.
- Make sure no obstructions restrict airflow to the outdoor unit.
- Grass clippings, leaves, or shrubs crowding the unit can cause the unit to work harder and use more energy.
- Keep shrubbery trimmed away from the unit and periodically check for debris which collects around the unit.

### Routine Maintenance

In order to ensure peak performance, your system must be properly maintained. Clogged filters and blocked airflow prevent your unit from operating at its most efficient level.

1. **Air Filter —** Ask your Lennox dealer to show you where your indoor unit's filter is located. It will be either at the indoor unit (installed internal or external to the cabinet) or behind a return air grille in the wall or ceiling. Check the filter monthly and clean or replace it as needed.
2. **Disposable Filter —** Disposable filters should be replaced with a filter of the same type and size.

*NOTE — If you are unsure about the filter required for your system, call your Lennox dealer for assistance.*

3. **Reusable Filter —** Many indoor units are equipped with reusable foam filters. Clean foam filters with a mild soap and water solution; rinse thoroughly; allow filter to dry completely before returning it to the unit or grille.

*NOTE — The filter and all access panels must be in place any time the unit is in operation.*

4. **Electronic Air Cleaner —** Some systems are equipped with an electronic air cleaner, designed to remove airborne particles from the air passing through the cleaner. If your system is so equipped, ask your dealer for maintenance instructions.
5. **Indoor Unit —** The indoor unit's evaporator coil is equipped with a drain pan to collect condensate formed as your system removes humidity from the inside air. Have your dealer show you the location of the drain line and how to check for obstructions. (This would also apply to an auxiliary drain, if installed.)

### Thermostat Operation

See the ComfortSense® 7000 or icomfort Touch™ thermostat homeowner manual for instructions on how to operate your thermostat.

### Preservice Check

If your system fails to operate, check the following before calling for service:

- Verify room thermostat settings are correct.
- Verify that all electrical disconnect switches are ON.
- Check for any blown fuses or tripped circuit breakers.
- Verify unit access panels are in place.
- Verify air filter is clean.
- If service is needed, locate and write down the unit model number and have it handy before calling.

### Accessories

For update-to-date information, see any of the following publications:

- Lennox CBX32MV Engineering Handbook
- Lennox Product Catalog
- Lennox Price Book