The Passat and Passat Estate

Price and specification guide

Effective from 24.2.2020

Intuitive, intelligent and quite simply inspirational.

Everything about the Passat is designed to make your busy life easier, safer and more comfortable. It's the first Volkswagen to offer the new IQ.Drive system 'Travel Assist', providing partially assisted driving with control of steering, braking and acceleration up to 130mph (where the law permits) aided by a touch-sensitive steering wheel, another Volkswagen first. A new, self-assured exterior showcases stylish contours, an updated front grille, new LED headlights and new colours including Lapiz Blue. While the restyled interior is spacious and packed with features such as seamless smartphone integration, Adaptive Cruise Control with Lane Assist and parking sensors as standard. Available as a Saloon or an Estate, the latter with a vast 650 litre luggage compartment volume. Trim levels include SE, SE Nav, SEL, R-Line and R-Line Edition, there are also Saloon and Estate GTE plug-in hybrids and an Estate Alltrack off-road model.

Model shown is Passat Estate R-Line with optional 'IQ. Light' LED matrix headlights, 19" 'Pretoria' Dark Graphite alloy wheels, panoramic sunroof and metallic signature paint.

Front cover models shown are Passat SEL with optional 'IQ. Light' LED matrix headlights, 17" 'Soho' Anthracite alloy wheels, panoramic sunroof and metallic paint, and Passat Estate R-Line with optional 'IQ. Light' LED matrix headlights, 19" 'Pretoria' Dark Graphite alloy wheels, panoramic sunroof and metallic signature paint.

R-Line. For those who demand the best.

The Passat R-Line raises the bar when it comes to style. Distinctive R-Line accents include specially designed front and rear bumpers, chrome body trim highlights, LED headlights blending seamlessly into the front chrome radiator grille and 'Gloss Black' surrounds featuring integrated fog lights. The exterior styling continues with the striking tornado line that runs from the front panel to the rear, as does the chrome detailing on the lower doors and lower front and rear bumpers. Side skirts and a 'Gloss Black' rear diffuser add to the sporty look and are enhanced by LED rear tail lights. Dynamic, sporty and self-assured, the Passat R-Line commands attention, leaving a lasting impression wherever it goes.

Model shown is Passat R-Line with optional 'IQ. Light' LED matrix headlights, 19" 'Pretoria' Dark Graphite alloy wheels and metallic signature paint.

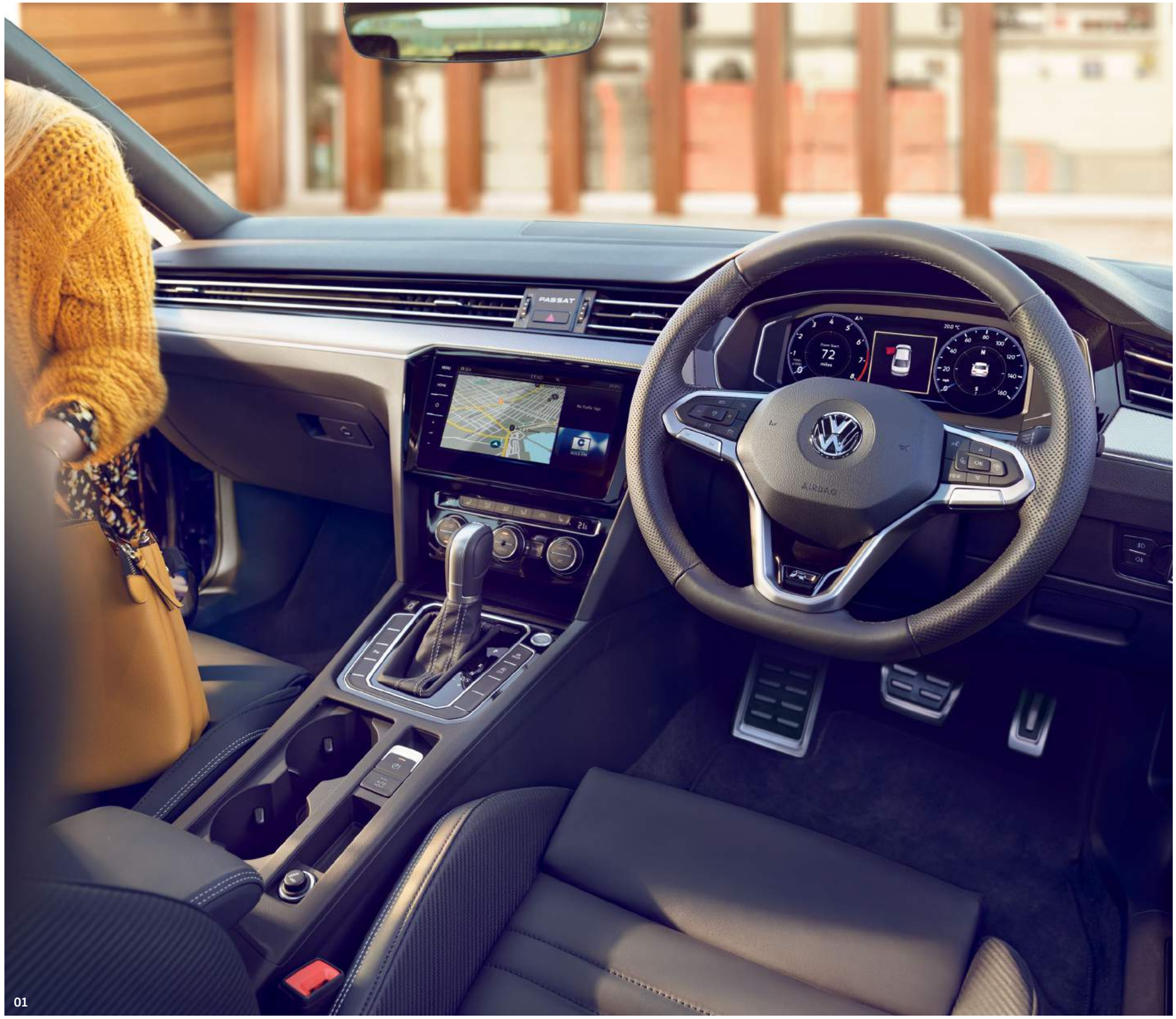

01

02

01 The **R-Line interior** features an intuitive multifunction steering wheel, finished in Titan Black 'Nappa' leather[1] with 'R-Line' logo, and complementary decorative dashboard accents in 'Dark Diamond Flag'. Also included are pedals and door sill protectors in stainless steel effect and ambient lighting. Many of Volkswagen's new technologies are fitted as standard, including the Discover Navigation infotainment system with integrated eSIM card and 'R-Line' start-screen. Furthermore, thanks to the new Wireless 'App-Connect'[2], your Passat can connect with current Apple or Android smartphones through three innovative technologies: 'MirrorLink'™, Apple 'CarPlay' and Google 'Android Auto'. Image shown features an optional Discover Navigation Pro infotainment system, Active Info Display and metallic signature paint.

02 R-Line sports seats for the driver and front passenger are both contemporary and stylish, featuring seat centre sections in **Titan Black 'Nappa' leather[1] with 'Carbon Optic' side bolsters** and the distinctive 'R-Line' logo displayed on the front seat backrest. Image shown features optional panoramic sunroof and metallic signature paint.

1 Some parts of leather interior will contain artificial leather.
2 Only operable in conjunction with compatible smartphones including iPhone 5 and above. Display and operation of certified apps including audio and voice control (if supported by the app). Usage of certified apps only while driving. Please see www.volkswagen.co.uk to check smartphone compatibility.

Work. Life.
And Eco Balance. All in one.

With its powerful 1.4 litre TSI petrol engine, the Passat GTE with plug-in hybrid technology puts you on the road to tomorrow. Powered by a turbocharged engine and electric motor, delivering a combined output of 218 PS, it is capable of travelling up to 36 miles[1] (WLTP cycle) on one battery charge. That's 12 miles further than the previous GTE model, representing an increase of 40%. Elegant signature highlights inside and out create an expressive, graceful design, while 'Vienna' leather[2] upholstery, 'Blue' ambient lighting, striking 'Blue' brake callipers and characteristic 'C' signature LED daytime running lights add a sporty, confident touch.

01

01 The large capacity 13 kWh battery increases the electric-only range up to 36 miles[1] of **emission-free driving**. Charging time is around four hours, while new driving modes allow you to save battery use for zero-emission zones. For drivers commuting into London, the new GTE is exempt from the Congestion Charge. Model shown is Passat Estate GTE with optional premium signature paint.

Models shown are Passat Estate GTE with optional 'IQ. Light' LED matrix headlights, panoramic sunroof, Head-up Display and premium signature paint, and Passat GTE Advance with optional 19" 'Pretoria' Dark Graphite alloy wheels and premium signature paint.

1 Please visit www.volkswagen.co.uk for CO_2 emissions and fuel consumption figures. Figures based on a fully charged battery at the start of the journey and dependent on outdoor temperature and driving style.
2 Some parts of leather interior will contain artificial leather.

The perfect companion for on- and off-road adventures.

The Passat Alltrack is confident on- and off-road, thanks to its rugged underbody protection, increased ground clearance and off-road driving programme. Standard 4MOTION all-wheel drive improves traction in wet and slippery conditions, handling the most challenging surfaces with ease, while intelligent driver assistance systems and a seven speed automatic DSG gearbox deliver a dynamic driving experience with outstanding handling on most surfaces. High quality design elements in stainless steel, chrome and aluminium create a contemporary, exclusive look, providing the ultimate in luxury and comfort on every journey. Whatever or wherever the challenge, the Alltrack more than delivers.

Model shown is Passat Alltrack with optional 'IQ. Light' LED matrix headlights, 19" 'Albertville' alloy wheels and metallic paint.
Roof bars are available as an accessory. Please refer to the *Accessories section*, or visit www.volkswagen.co.uk for full availability of products.

01

01 The **stylish front design** is sporty and eye-catching with LED headlights blending seamlessly into the new chrome radiator grille complete with the exclusive 'Alltrack' logo. Striking 'Gloss Black' surrounds featuring integrated fog lights with static cornering function complete the look. Image shown features optional 'IQ. Light' LED matrix headlights and metallic paint.

Model prices – Passat.

4-DOOR SALOON RANGE.		RDE2 Compliant	Fuel		Transmission	Output, PS	CO_2 emission, g/km [1]	Basic Recommended Retail £	VAT £	Total Recommended Retail £	Additional 'On the road' Costs £ [2]	Manufacturer's Recommended 'On the road' Retail £ [2]	P11D Value £ [3]	BIK % [4]	ABI Insurance Group [5]
SE ‡	1.5 ltr TSI EVO ‡	No	Petrol	4-door	6-spd manual	150	117	20,600.00	4,120.00	**24,720.00**	**860.00**	**25,580.00**	**25,355.00**	**27**	**20E**
	1.5 ltr TSI EVO ‡	No	Petrol	4-door	7-spd auto DSG	150	117	21,933.33	4,386.67	**26,320.00**	**860.00**	**27,180.00**	**26,955.00**	**27**	**20E**
	1.6 ltr TDI ‡	No	Diesel	4-door	7-spd auto DSG	120	105	22,483.33	4,496.67	**26,980.00**	**860.00**	**27,840.00**	**27,615.00**	**29**	**15E**
	2.0 ltr TDI EVO SCR ‡	No	Diesel	4-door	6-spd manual	150	101	22,233.33	4,446.67	**26,680.00**	**860.00**	**27,540.00**	**27,315.00**	**28**	**21E**
	2.0 ltr TDI EVO SCR ‡	No	Diesel	4-door	7-spd auto DSG	150	102	23,566.67	4,713.33	**28,280.00**	**860.00**	**29,140.00**	**28,915.00**	**28**	**21E**
SE NAV ‡	1.5 ltr TSI EVO ‡	No	Petrol	4-door	6-spd manual	150	117	21,308.33	4,261.67	**25,570.00**	**860.00**	**26,430.00**	**26,205.00**	**27**	**20E**
	1.5 ltr TSI EVO ‡	No	Petrol	4-door	7-spd auto DSG	150	117	22,641.67	4,528.33	**27,170.00**	**860.00**	**28,030.00**	**27,805.00**	**27**	**20E**
	1.6 ltr TDI ‡	No	Diesel	4-door	7-spd auto DSG	120	105	23,191.67	4,638.33	**27,830.00**	**860.00**	**28,690.00**	**28,465.00**	**29**	**15E**
	2.0 ltr TDI EVO SCR ‡	No	Diesel	4-door	6-spd manual	150	101	22,941.67	4,588.33	**27,530.00**	**860.00**	**28,390.00**	**28,165.00**	**28**	**22E**
	2.0 ltr TDI EVO SCR ‡	No	Diesel	4-door	7-spd auto DSG	150	102	24,275.00	4,855.00	**29,130.00**	**860.00**	**29,990.00**	**29,765.00**	**28**	**22E**

1 Figures shown are for comparability purposes; only compare fuel consumption and CO_2 figures with other vehicles tested to the same technical procedures. These figures may not reflect real life driving results, which will depend upon a number of factors including the accessories fitted (post-registration), variations in weather, driving styles and vehicle load. There is a new test used for fuel consumption and CO_2 figures (known as WLTP). The CO_2 figures shown however, are based on a calculation designed to be equivalent to the outgoing (NEDC) test cycle and will be used to calculate vehicle tax on first registration. For more information, please see www.volkswagen.co.uk/need-help/wltp or consult your authorised Volkswagen retailer. 2 For full details of 'First year rate' VED (Vehicle Excise Duty), delivery to retailer, number plates and vehicle first registration fee included in the recommended 'On the road' retail price, *please click here* 3 P11D value = Total recommended retail price + delivery to retailer £509.17, + number plates £20, + VAT £105.83 (calculated by reference to total of delivery to retailer + number plates). P11D value is based on standard specification model with no factory-fitted options or other accessories. 4 The BIK % figure quoted includes the 4% diesel supplement, where applicable. 5 The ABI insurance group is the recommended insurance rating set by the Association of British Insurers. Please note that insurance group ratings are purely advisory. They are used by insurers (ABI members and Lloyd's syndicates) as one of the factors in calculating premiums. Insurers are not required to follow the advisory group ratings and they may depart from them if they so wish.

‡ These vehicles are WLTP (Worldwide Harmonised Light-Duty Vehicles Test Procedure) type approved vehicles. More information is available at www.volkswagen.co.uk/need-help/wltp.

SCR (Selective Catalytic Reduction) requires AdBlue®, *please click here* or visit www.volkswagen.co.uk/technology/engines/adblue for more details.

RDE2 refers to Real Driving Emissions Step 2.

Volkswagen Service Plan – Retail sales only.

For vehicles under 1 year old set to the Fixed Service regime that has not had its first service, comprising first two manufacturer's scheduled services:

– 'Oil service' including oil filter change

– 'Oil service' including oil filter change and 'Inspection service' plus a pollen filter replacement (if required)

Excludes electric vehicles. Service plan covers first two consecutive services, limited to 1x 'Oil service' and 1x 'Oil and Inspection service'. T&Cs apply: All vehicles must be set to the Fixed Service regime by the retailer. Maximum age of car is 12 months (Service plan must be taken out before first service is due). Additional work, including wear and tear is excluded. Servicing must be carried out in line with the requirement of the Service Schedule. All work must be carried out by an Authorised Volkswagen Repairer. Offers may be varied or withdrawn at any time. Plan validity is dependent on required payments received. Administered by Volkswagen Financial Services. Retail sales only. For pricing and further details, please consult your authorised Volkswagen retailer or visit www.volkswagen.co.uk

Prices, specifications, features, technical and other information (including fuel consumption, CO_2 emissions and range) are updated regularly and are subject to change without notice (this may include changes between order and delivery). There may be a delay in updates to our materials – always consult your authorised Volkswagen retailer for the latest information.

Volkswagen UK may change RRPs at any time (this includes where there are government changes in regulation and/or legislation).
There may be a delay to any RRP displaying correctly on our materials. Always obtain prices from your chosen authorised Volkswagen retailer.

VAT IS CALCULATED AT 20%. EFFECTIVE FROM 24 FEBRUARY 2020

Model prices – Passat.

4-DOOR SALOON RANGE.		RDE2 Compliant	Fuel		Transmission	Output, PS	CO_2 emission, g/km [1]	Basic Recommended Retail £	VAT £	Total Recommended Retail £	Additional 'On the road' Costs £ [2]	Manufacturer's Recommended 'On the road' Retail £ [2]	P11D Value £ [3]	BIK % [4]	ABI Insurance Group [5]
SEL ‡	1.5 ltr TSI EVO ‡	No	Petrol	4-door	6-spd manual	150	117	22,100.00	4,420.00	**26,520.00**	**860.00**	**27,380.00**	**27,155.00**	**27**	**20E**
	1.5 ltr TSI EVO ‡	No	Petrol	4-door	7-spd auto DSG	150	117	23,433.33	4,686.67	**28,120.00**	**860.00**	**28,980.00**	**28,755.00**	**27**	**20E**
	2.0 ltr TSI ‡	No	Petrol	4-door	7-spd auto DSG	190	143	24,650.00	4,930.00	**29,580.00**	**900.00**	**30,480.00**	**30,215.00**	**32**	**25E**
	1.6 ltr TDI ‡	No	Diesel	4-door	7-spd auto DSG	120	105	23,983.33	4,796.67	**28,780.00**	**860.00**	**29,640.00**	**29,415.00**	**29**	**15E**
	2.0 ltr TDI EVO SCR ‡	No	Diesel	4-door	6-spd manual	150	101	23,733.33	4,746.67	**28,480.00**	**860.00**	**29,340.00**	**29,115.00**	**28**	**22E**
	2.0 ltr TDI EVO SCR ‡	No	Diesel	4-door	7-spd auto DSG	150	102	25,066.67	5,013.33	**30,080.00**	**860.00**	**30,940.00**	**30,715.00**	**28**	**22E**
	2.0 ltr TDI SCR ‡	No	Diesel	4-door	7-spd auto DSG	190	118	26,316.67	5,263.33	**31,580.00**	**900.00**	**32,480.00**	**32,215.00**	**31**	**25E**

1 Figures shown are for comparability purposes; only compare fuel consumption and CO_2 figures with other vehicles tested to the same technical procedures. These figures may not reflect real life driving results, which will depend upon a number of factors including the accessories fitted (post-registration), variations in weather, driving styles and vehicle load. There is a new test used for fuel consumption and CO_2 figures (known as WLTP). The CO_2 figures shown however, are based on a calculation designed to be equivalent to the outgoing (NEDC) test cycle and will be used to calculate vehicle tax on first registration. For more information, please see www.volkswagen.co.uk/need-help/wltp or consult your authorised Volkswagen retailer. 2 For full details of 'First year rate' VED (Vehicle Excise Duty), delivery to retailer, number plates and vehicle first registration fee included in the recommended 'On the road' retail price, *please click here* 3 P11D value = Total recommended retail price + delivery to retailer £509.17, + number plates £20, + VAT £105.83 (calculated by reference to total of delivery to retailer + number plates). P11D value is based on standard specification model with no factory-fitted options or other accessories. 4 The BIK % figure quoted includes the 4% diesel supplement, where applicable. 5 The ABI insurance group is the recommended insurance rating set by the Association of British Insurers. Please note that insurance group ratings are purely advisory. They are used by insurers (ABI members and Lloyd's syndicates) as one of the factors in calculating premiums. Insurers are not required to follow the advisory group ratings and they may depart from them if they so wish.

‡ These vehicles are WLTP (Worldwide Harmonised Light-Duty Vehicles Test Procedure) type approved vehicles. More information is available at www.volkswagen.co.uk/need-help/wltp.

SCR (Selective Catalytic Reduction) requires AdBlue®, *please click here* or visit www.volkswagen.co.uk/technology/engines/adblue for more details.

RDE2 refers to Real Driving Emissions Step 2.

Volkswagen Service Plan – Retail sales only.

For vehicles under 1 year old set to the Fixed Service regime that has not had its first service, comprising first two manufacturer's scheduled services:

– 'Oil service' including oil filter change

– 'Oil service' including oil filter change and 'Inspection service' plus a pollen filter replacement (if required)

Excludes electric vehicles. Service plan covers first two consecutive services, limited to 1x 'Oil service' and 1x 'Oil and Inspection service'. T&Cs apply: All vehicles must be set to the Fixed Service regime by the retailer. Maximum age of car is 12 months (Service plan must be taken out before first service is due). Additional work, including wear and tear is excluded. Servicing must be carried out in line with the requirement of the Service Schedule. All work must be carried out by an Authorised Volkswagen Repairer. Offers may be varied or withdrawn at any time. Plan validity is dependent on required payments received. Administered by Volkswagen Financial Services. Retail sales only. For pricing and further details, please consult your authorised Volkswagen retailer or visit www.volkswagen.co.uk

Prices, specifications, features, technical and other information (including fuel consumption, CO_2 emissions and range) are updated regularly and are subject to change without notice (this may include changes between order and delivery). There may be a delay in updates to our materials – always consult your authorised Volkswagen retailer for the latest information.

Volkswagen UK may change RRPs at any time (this includes where there are government changes in regulation and/or legislation). There may be a delay to any RRP displaying correctly on our materials. Always obtain prices from your chosen authorised Volkswagen retailer.

VAT IS CALCULATED AT 20%. EFFECTIVE FROM 24 FEBRUARY 2020.

Model prices – Passat.

4-DOOR SALOON RANGE.		RDE2 Compliant	Fuel		Transmission	Output, PS	CO_2 emission, g/km[1]	Basic Recommended Retail £	VAT £	Total Recommended Retail £	Additional 'On the road' Costs £[2]	Manufacturer's Recommended 'On the road' Retail £[2]	P11D Value £[3]	BIK %[4]	ABI Insurance Group[5]
R-LINE‡	1.5 ltr TSI EVO‡	No	Petrol	4-door	6-spd manual	150	119	24,433.33	4,886.67	**29,320.00**	**860.00**	**30,180.00**	**29,955.00**	**27**	**21E**
	1.5 ltr TSI EVO‡	No	Petrol	4-door	7-spd auto DSG	150	119	25,766.67	5,153.33	**30,920.00**	**860.00**	**31,780.00**	**31,555.00**	**27**	**21E**
	2.0 ltr TSI‡	No	Petrol	4-door	7-spd auto DSG	190	140	26,983.33	5,396.67	**32,380.00**	**900.00**	**33,280.00**	**33,015.00**	**32**	**26E**
	2.0 ltr TDI EVO SCR‡	No	Diesel	4-door	6-spd manual	150	104	26,066.67	5,213.33	**31,280.00**	**860.00**	**32,140.00**	**31,915.00**	**28**	**22E**
	2.0 ltr TDI EVO SCR‡	No	Diesel	4-door	7-spd auto DSG	150	104	27,400.00	5,480.00	**32,880.00**	**860.00**	**33,740.00**	**33,515.00**	**28**	**22E**
	2.0 ltr TDI SCR‡	No	Diesel	4-door	7-spd auto DSG	190	116	28,650.00	5,730.00	**34,380.00**	**900.00**	**35,280.00**	**35,015.00**	**31**	**26E**
	2.0 ltr TDI SCR 4MOTION‡	No	Diesel	4-door	7-spd auto DSG	190	126	30,550.00	6,110.00	**36,660.00**	**900.00**	**37,560.00**	**37,295.00**	**33**	**26E**
	2.0 ltr BiTDI SCR 4MOTION‡	No	Diesel	4-door	7-spd auto DSG	240	148	32,862.50	6,572.50	**39,435.00**	**1,220.00**	**40,655.00**	**40,070.00**	**37**	**32E**

1 Figures shown are for comparability purposes; only compare fuel consumption and CO_2 figures with other vehicles tested to the same technical procedures. These figures may not reflect real life driving results, which will depend upon a number of factors including the accessories fitted (post-registration), variations in weather, driving styles and vehicle load. There is a new test used for fuel consumption and CO_2 figures (known as WLTP). The CO_2 figures shown however, are based on a calculation designed to be equivalent to the outgoing (NEDC) test cycle and will be used to calculate vehicle tax on first registration. For more information, please see www.volkswagen.co.uk/need-help/wltp or consult your authorised Volkswagen retailer. 2 For full details of 'First year rate' VED (Vehicle Excise Duty), delivery to retailer, number plates and vehicle first registration fee included in the recommended 'On the road' retail price, *please click here* 3 P11D value = Total recommended retail price + delivery to retailer £509.17, + number plates £20, + VAT £105.83 (calculated by reference to total of delivery to retailer + number plates). P11D value is based on standard specification model with no factory-fitted options or other accessories. 4 The BIK % figure quoted includes the 4% diesel supplement, where applicable. 5 The ABI insurance group is the recommended insurance rating set by the Association of British Insurers. Please note that insurance group ratings are purely advisory. They are used by insurers (ABI members and Lloyd's syndicates) as one of the factors in calculating premiums. Insurers are not required to follow the advisory group ratings and they may depart from them if they so wish.

‡ These vehicles are WLTP (Worldwide Harmonised Light-Duty Vehicles Test Procedure) type approved vehicles. More information is available at www.volkswagen.co.uk/need-help/wltp.
SCR (Selective Catalytic Reduction) requires AdBlue®, *please click here* or visit www.volkswagen.co.uk/technology/engines/adblue for more details.
RDE2 refers to Real Driving Emissions Step 2.

Volkswagen Service Plan – Retail sales only.

For vehicles under 1 year old set to the Fixed Service regime that has not had its first service, comprising first two manufacturer's scheduled services:

– 'Oil service' including oil filter change

– 'Oil service' including oil filter change and 'Inspection service' plus a pollen filter replacement (if required)

Excludes electric vehicles. Service plan covers first two consecutive services, limited to 1x 'Oil service' and 1x 'Oil and Inspection service'. T&Cs apply: All vehicles must be set to the Fixed Service regime by the retailer. Maximum age of car is 12 months (Service plan must be taken out before first service is due). Additional work, including wear and tear is excluded. Servicing must be carried out in line with the requirement of the Service Schedule. All work must be carried out by an Authorised Volkswagen Repairer. Offers may be varied or withdrawn at any time. Plan validity is dependent on required payments received. Administered by Volkswagen Financial Services. Retail sales only. For pricing and further details, please consult your authorised Volkswagen retailer or visit www.volkswagen.co.uk

Prices, specifications, features, technical and other information (including fuel consumption, CO_2 emissions and range) are updated regularly and are subject to change without notice (this may include changes between order and delivery). There may be a delay in updates to our materials – always consult your authorised Volkswagen retailer for the latest information.

Volkswagen UK may change RRPs at any time (this includes where there are government changes in regulation and/or legislation).
There may be a delay to any RRP displaying correctly on our materials. Always obtain prices from your chosen authorised Volkswagen retailer.

VAT IS CALCULATED AT 20%. EFFECTIVE FROM 24 FEBRUARY 2020.

Model prices – Passat.

PETROL/ELECTRIC HYBRID 4-DOOR SALOON RANGE.		RDE2 Compliant	Fuel		Transmission	Combined output, PS	CO_2 emission, g/km [1]	Basic Recommended Retail £	VAT £	Total Recommended Retail £	Additional 'On the road' Costs £ [2]	Manufacturer's Recommended 'On the road' Retail £ [2]	P11D Value £ [3]	BIK % [4]	ABI Insurance Group [5]
GTE ‡	1.4 ltr TSI PHEV ‡	No	Hybrid	4-door	6-spd auto DSG	218	32	29,925.00	5,985.00	**35,910.00**	**690.00**	**36,600.00**	**36,545.00**	**16**	**26E**
GTE ADVANCE ‡	1.4 ltr TSI PHEV ‡	No	Hybrid	4-door	6-spd auto DSG	218	34	32,050.00	6,410.00	**38,460.00**	**690.00**	**39,150.00**	**39,095.00**	**16**	**28E**

1 These figures were obtained using a combination of battery power and fuel. The Passat Saloon GTE is a plug-in hybrid vehicle requiring mains electricity for charging. Figures shown are for comparability purposes; only compare fuel consumption, CO_2 and electric range figures with other vehicles tested to the same technical procedures. These figures may not reflect real life driving results, which will depend upon a number of factors including the accessories fitted (post-registration), variations in weather, driving styles and vehicle load. There is a new test used for fuel consumption and CO_2 figures (known as WLTP). The CO_2 figures shown however, are based on a calculation designed to be equivalent to the outgoing (NEDC) test cycle and will be used to calculate vehicle tax on first registration. For more information, please see www.volkswagen.co.uk/need-help/wltp or consult your authorised Volkswagen retailer. 2 For full details of 'First year rate' VED (Vehicle Excise Duty), delivery to retailer, number plates and vehicle first registration fee included in the recommended 'On the road' retail price, *please click here* 3 P11D value = Total recommended retail price + delivery to retailer £509.17, + number plates £20, + VAT £105.83 (calculated by reference to total of delivery to retailer + number plates). P11D value is based on standard specification model with no factory-fitted options or other accessories. 4 The BIK % figure quoted includes the 4% diesel supplement, where applicable. 5 The ABI insurance group is the recommended insurance rating set by the Association of British Insurers. Please note that insurance group ratings are purely advisory. They are used by insurers (ABI members and Lloyd's syndicates) as one of the factors in calculating premiums. Insurers are not required to follow the advisory group ratings and they may depart from them if they so wish.
‡ These vehicles are WLTP (Worldwide Harmonised Light-Duty Vehicles Test Procedure) type approved vehicles. More information is available at www.volkswagen.co.uk/need-help/wltp.
RDE2 refers to Real Driving Emissions Step 2.

Volkswagen Service Plan – Retail sales only.

For vehicles under 1 year old set to the Fixed Service regime that has not had its first service, comprising first two manufacturer's scheduled services:

- 'Oil service' including oil filter change
- 'Oil service' including oil filter change and 'Inspection service' plus a pollen filter replacement (if required)

Excludes electric vehicles. Service plan covers first two consecutive services, limited to 1x 'Oil service' and 1x 'Oil and Inspection service'. T&Cs apply: All vehicles must be set to the Fixed Service regime by the retailer. Maximum age of car is 12 months (Service plan must be taken out before first service is due). Additional work, including wear and tear is excluded. Servicing must be carried out in line with the requirement of the Service Schedule. All work must be carried out by an Authorised Volkswagen Repairer. Offers may be varied or withdrawn at any time. Plan validity is dependent on required payments received. Administered by Volkswagen Financial Services. Retail sales only. For pricing and further details, please consult your authorised Volkswagen retailer or visit www.volkswagen.co.uk

Prices, specifications, features, technical and other information (including fuel consumption, CO_2 emissions and range) are updated regularly and are subject to change without notice (this may include changes between order and delivery). There may be a delay in updates to our materials – always consult your authorised Volkswagen retailer for the latest information.

Volkswagen UK may change RRPs at any time (this includes where there are government changes in regulation and/or legislation).
There may be a delay to any RRP displaying correctly on our materials. Always obtain prices from your chosen authorised Volkswagen retailer.

VAT IS CALCULATED AT 20%. EFFECTIVE FROM 24 FEBRUARY 2020.

Model prices – Passat Estate.

5-DOOR ESTATE RANGE.		RDE2 Compliant	Fuel		Transmission	Output, PS	CO_2 emission, g/km [1]	Basic Recommended Retail £	VAT £	Total Recommended Retail £	Additional 'On the road' Costs £ [2]	Manufacturer's Recommended 'On the road' Retail £ [2]	P11D Value £ [3]	BIK % [4]	ABI Insurance Group [5]
SE ‡	1.5 ltr TSI EVO ‡	No	Petrol	5-door	6-spd manual	150	120	22,262.50	4,452.50	**26,715.00**	**860.00**	**27,575.00**	**27,350.00**	**28**	**20E**
	1.5 ltr TSI EVO ‡	No	Petrol	5-door	7-spd auto DSG	150	120	23,595.83	4,719.17	**28,315.00**	**860.00**	**29,175.00**	**28,950.00**	**28**	**20E**
	1.6 ltr TDI ‡	No	Diesel	5-door	7-spd auto DSG	120	111	24,145.83	4,829.17	**28,975.00**	**900.00**	**29,875.00**	**29,610.00**	**30**	**15E**
	2.0 ltr TDI EVO SCR ‡	No	Diesel	5-door	6-spd manual	150	104	23,895.83	4,779.17	**28,675.00**	**860.00**	**29,535.00**	**29,310.00**	**28**	**21E**
	2.0 ltr TDI EVO SCR ‡	No	Diesel	5-door	7-spd auto DSG	150	105	25,229.17	5,045.83	**30,275.00**	**860.00**	**31,135.00**	**30,910.00**	**29**	**22E**
SE NAV ‡	1.5 ltr TSI EVO ‡	No	Petrol	5-door	6-spd manual	150	120	22,970.83	4,594.17	**27,565.00**	**860.00**	**28,425.00**	**28,200.00**	**28**	**20E**
	1.5 ltr TSI EVO ‡	No	Petrol	5-door	7-spd auto DSG	150	120	24,304.17	4,860.83	**29,165.00**	**860.00**	**30,025.00**	**29,800.00**	**28**	**20E**
	1.6 ltr TDI ‡	No	Diesel	5-door	7-spd auto DSG	120	111	24,854.17	4,970.83	**29,825.00**	**900.00**	**30,725.00**	**30,460.00**	**30**	**15E**
	2.0 ltr TDI EVO SCR ‡	No	Diesel	5-door	6-spd manual	150	104	24,604.17	4,920.83	**29,525.00**	**860.00**	**30,385.00**	**30,160.00**	**28**	**21E**
	2.0 ltr TDI EVO SCR ‡	No	Diesel	5-door	7-spd auto DSG	150	105	25,937.50	5,187.50	**31,125.00**	**860.00**	**31,985.00**	**31,760.00**	**29**	**22E**

1 Figures shown are for comparability purposes; only compare fuel consumption and CO_2 figures with other vehicles tested to the same technical procedures. These figures may not reflect real life driving results, which will depend upon a number of factors including the accessories fitted (post-registration), variations in weather, driving styles and vehicle load. There is a new test used for fuel consumption and CO_2 figures (known as WLTP). The CO_2 figures shown however, are based on a calculation designed to be equivalent to the outgoing (NEDC) test cycle and will be used to calculate vehicle tax on first registration. For more information, please see www.volkswagen.co.uk/need-help/wltp or consult your authorised Volkswagen retailer. 2 For full details of 'First year rate' VED (Vehicle Excise Duty), delivery to retailer, number plates and vehicle first registration fee included in the recommended 'On the road' retail price, *please click here* 3 P11D value = Total recommended retail price + delivery to retailer £509.17, + number plates £20, + VAT £105.83 (calculated by reference to total of delivery to retailer + number plates). P11D value is based on standard specification model with no factory-fitted options or other accessories. 4 The BIK % figure quoted includes the 4% diesel supplement, where applicable. 5 The ABI insurance group is the recommended insurance rating set by the Association of British Insurers. Please note that insurance group ratings are purely advisory. They are used by insurers (ABI members and Lloyd's syndicates) as one of the factors in calculating premiums. Insurers are not required to follow the advisory group ratings and they may depart from them if they so wish.

‡ These vehicles are WLTP (Worldwide Harmonised Light-Duty Vehicles Test Procedure) type approved vehicles. More information is available at www.volkswagen.co.uk/need-help/wltp.

SCR (Selective Catalytic Reduction) requires AdBlue®, *please click here* or visit www.volkswagen.co.uk/technology/engines/adblue for more details.

RDE2 refers to Real Driving Emissions Step 2.

Volkswagen Service Plan – Retail sales only.

For vehicles under 1 year old set to the Fixed Service regime that has not had its first service, comprising first two manufacturer's scheduled services:

– 'Oil service' including oil filter change

– 'Oil service' including oil filter change and 'Inspection service' plus a pollen filter replacement (if required)

Excludes electric vehicles. Service plan covers first two consecutive services, limited to 1x 'Oil service' and 1x 'Oil and Inspection service'. T&Cs apply: All vehicles must be set to the Fixed Service regime by the retailer. Maximum age of car is 12 months (Service plan must be taken out before first service is due). Additional work, including wear and tear is excluded. Servicing must be carried out in line with the requirement of the Service Schedule. All work must be carried out by an Authorised Volkswagen Repairer. Offers may be varied or withdrawn at any time. Plan validity is dependent on required payments received. Administered by Volkswagen Financial Services. Retail sales only. For pricing and further details, please consult your authorised Volkswagen retailer or visit www.volkswagen.co.uk

Prices, specifications, features, technical and other information (including fuel consumption, CO_2 emissions and range) are updated regularly and are subject to change without notice (this may include changes between order and delivery). There may be a delay in updates to our materials – always consult your authorised Volkswagen retailer for the latest information.

Volkswagen UK may change RRPs at any time (this includes where there are government changes in regulation and/or legislation). There may be a delay to any RRP displaying correctly on our materials. Always obtain prices from your chosen authorised Volkswagen retailer.

VAT IS CALCULATED AT 20%. EFFECTIVE FROM 24 FEBRUARY 2020.

Model prices – Passat Estate.

5-DOOR ESTATE RANGE.		RDE2 Compliant	Fuel		Transmission	Output, PS	CO_2 emission, g/km [1]	Basic Recommended Retail £	VAT £	Total Recommended Retail £	Additional 'On the road' Costs £ [2]	Manufacturer's Recommended 'On the road' Retail £ [2]	P11D Value £ [3]	BIK % [4]	ABI Insurance Group [5]
SEL ‡	1.5 ltr TSI EVO ‡	No	Petrol	5-door	6-spd manual	150	120	23,762.50	4,752.50	**28,515.00**	**860.00**	**29,375.00**	**29,150.00**	**28**	**20E**
	1.5 ltr TSI EVO ‡	No	Petrol	5-door	7-spd auto DSG	150	120	25,095.83	5,019.17	**30,115.00**	**860.00**	**30,975.00**	**30,750.00**	**28**	**20E**
	2.0 ltr TSI ‡	No	Petrol	5-door	7-spd auto DSG	190	146	26,312.50	5,262.50	**31,575.00**	**900.00**	**32,475.00**	**32,210.00**	**33**	**25E**
	1.6 ltr TDI ‡	No	Diesel	5-door	7-spd auto DSG	120	111	25,645.83	5,129.17	**30,775.00**	**900.00**	**31,675.00**	**31,410.00**	**30**	**15E**
	2.0 ltr TDI EVO SCR ‡	No	Diesel	5-door	6-spd manual	150	104	25,395.83	5,079.17	**30,475.00**	**860.00**	**31,335.00**	**31,110.00**	**28**	**21E**
	2.0 ltr TDI EVO SCR ‡	No	Diesel	5-door	7-spd auto DSG	150	105	26,729.17	5,345.83	**32,075.00**	**860.00**	**32,935.00**	**32,710.00**	**29**	**22E**
	2.0 ltr TDI SCR ‡	No	Diesel	5-door	7-spd auto DSG	190	120	27,979.17	5,595.83	**33,575.00**	**900.00**	**34,475.00**	**34,210.00**	**32**	**25E**

1 Figures shown are for comparability purposes; only compare fuel consumption and CO_2 figures with other vehicles tested to the same technical procedures. These figures may not reflect real life driving results, which will depend upon a number of factors including the accessories fitted (post-registration), variations in weather, driving styles and vehicle load. There is a new test used for fuel consumption and CO_2 figures (known as WLTP). The CO_2 figures shown however, are based on a calculation designed to be equivalent to the outgoing (NEDC) test cycle and will be used to calculate vehicle tax on first registration. For more information, please see www.volkswagen.co.uk/need-help/wltp or consult your authorised Volkswagen retailer. 2 For full details of 'First year rate' VED (Vehicle Excise Duty), delivery to retailer, number plates and vehicle first registration fee included in the recommended 'On the road' retail price, *please click here* 3 P11D value = Total recommended retail price + delivery to retailer £509.17, + number plates £20, + VAT £105.83 (calculated by reference to total of delivery to retailer + number plates). P11D value is based on standard specification model with no factory-fitted options or other accessories. 4 The BIK % figure quoted includes the 4% diesel supplement, where applicable. 5 The ABI insurance group is the recommended insurance rating set by the Association of British Insurers. Please note that insurance group ratings are purely advisory. They are used by insurers (ABI members and Lloyd's syndicates) as one of the factors in calculating premiums. Insurers are not required to follow the advisory group ratings and they may depart from them if they so wish.

‡ These vehicles are WLTP (Worldwide Harmonised Light-Duty Vehicles Test Procedure) type approved vehicles. More information is available at www.volkswagen.co.uk/need-help/wltp.

SCR (Selective Catalytic Reduction) requires AdBlue®, *please click here* or visit www.volkswagen.co.uk/technology/engines/adblue for more details.

RDE2 refers to Real Driving Emissions Step 2.

Volkswagen Service Plan – Retail sales only.

For vehicles under 1 year old set to the Fixed Service regime that has not had its first service, comprising first two manufacturer's scheduled services:

– 'Oil service' including oil filter change

– 'Oil service' including oil filter change and 'Inspection service' plus a pollen filter replacement (if required)

Excludes electric vehicles. Service plan covers first two consecutive services, limited to 1x 'Oil service' and 1x 'Oil and Inspection service'. T&Cs apply: All vehicles must be set to the Fixed Service regime by the retailer. Maximum age of car is 12 months (Service plan must be taken out before first service is due). Additional work, including wear and tear is excluded. Servicing must be carried out in line with the requirement of the Service Schedule. All work must be carried out by an Authorised Volkswagen Repairer. Offers may be varied or withdrawn at any time. Plan validity is dependent on required payments received. Administered by Volkswagen Financial Services. Retail sales only. For pricing and further details, please consult your authorised Volkswagen retailer or visit www.volkswagen.co.uk

Prices, specifications, features, technical and other information (including fuel consumption, CO_2 emissions and range) are updated regularly and are subject to change without notice (this may include changes between order and delivery). There may be a delay in updates to our materials – always consult your authorised Volkswagen retailer for the latest information.

Volkswagen UK may change RRPs at any time (this includes where there are government changes in regulation and/or legislation). There may be a delay to any RRP displaying correctly on our materials. Always obtain prices from your chosen authorised Volkswagen retailer.

VAT IS CALCULATED AT 20%. EFFECTIVE FROM 24 FEBRUARY 2020.

Model prices – Passat Estate.

5-DOOR ESTATE RANGE.		RDE2 Compliant	Fuel		Transmission	Output, PS	CO_2 emission, g/km[1]	Basic Recommended Retail £	VAT £	Total Recommended Retail £	Additional 'On the road' Costs £[2]	Manufacturer's Recommended 'On the road' Retail £[2]	P11D Value £[3]	BIK %[4]	ABI Insurance Group[5]
R-LINE‡	1.5 ltr TSI EVO‡	No	Petrol	5-door	6-spd manual	150	122	26,095.83	5,219.17	**31,315.00**	**860.00**	**32,175.00**	**31,950.00**	**28**	**21E**
	1.5 ltr TSI EVO‡	No	Petrol	5-door	7-spd auto DSG	150	122	27,429.17	5,485.83	**32,915.00**	**860.00**	**33,775.00**	**33,550.00**	**28**	**21E**
	2.0 ltr TSI‡	No	Petrol	5-door	7-spd auto DSG	190	143	28,645.83	5,729.17	**34,375.00**	**900.00**	**35,275.00**	**35,010.00**	**32**	**26E**
	2.0 ltr TDI EVO SCR‡	No	Diesel	5-door	6-spd manual	150	106	27,729.17	5,545.83	**33,275.00**	**860.00**	**34,135.00**	**33,910.00**	**29**	**21E**
	2.0 ltr TDI EVO SCR‡	No	Diesel	5-door	7-spd auto DSG	150	107	29,062.50	5,812.50	**34,875.00**	**860.00**	**35,735.00**	**35,510.00**	**29**	**22E**
	2.0 ltr TDI SCR‡	No	Diesel	5-door	7-spd auto DSG	190	118	30,312.50	6,062.50	**36,375.00**	**900.00**	**37,275.00**	**37,010.00**	**31**	**26E**
	2.0 ltr TDI SCR 4MOTION‡	No	Diesel	5-door	7-spd auto DSG	190	129	32,212.50	6,442.50	**38,655.00**	**900.00**	**39,555.00**	**39,290.00**	**33**	**26E**
	2.0 ltr BiTDI SCR 4MOTION‡	No	Diesel	5-door	7-spd auto DSG	240	153	34,525.00	6,905.00	**41,430.00**	**1,545.00**	**42,975.00**	**42,065.00**	**37**	**32E**
R-LINE EDITION‡†	2.0 ltr TSI 4MOTION‡	No	Petrol	5-door	7-spd auto DSG	272	162	35,433.33	7,086.67	**42,520.00**	**1,220.00**	**43,740.00**	**43,155.00**	**36**	**33E**
	2.0 ltr BiTDI SCR 4MOTION‡	No	Diesel	5-door	7-spd auto DSG	240	156	36,579.17	7,315.83	**43,895.00**	**1,545.00**	**45,440.00**	**44,530.00**	**37**	**33E**
ALLTRACK‡	2.0 ltr TDI SCR 4MOTION‡	No	Diesel	5-door	7-spd auto DSG	190	127	31,962.50	6,392.50	**38,355.00**	**900.00**	**39,255.00**	**38,990.00**	**33**	**25E**

1 Figures shown are for comparability purposes; only compare fuel consumption and CO_2 figures with other vehicles tested to the same technical procedures. These figures may not reflect real life driving results, which will depend upon a number of factors including the accessories fitted (post-registration), variations in weather, driving styles and vehicle load. There is a new test used for fuel consumption and CO_2 figures (known as WLTP). The CO_2 figures shown however, are based on a calculation designed to be equivalent to the outgoing (NEDC) test cycle and will be used to calculate vehicle tax on first registration. For more information, please see www.volkswagen.co.uk/need-help/wltp or consult your authorised Volkswagen retailer. 2 For full details of 'First year rate' VED (Vehicle Excise Duty), delivery to retailer, number plates and vehicle first registration fee included in the recommended 'On the road' retail price, *please click here* 3 P11D value = Total recommended retail price + delivery to retailer £509.17, + number plates £20, + VAT £105.83 (calculated by reference to total of delivery to retailer + number plates). P11D value is based on standard specification model with no factory-fitted options or other accessories. 4 The BIK % figure quoted includes the 4% diesel supplement, where applicable. 5 The ABI insurance group is the recommended insurance rating set by the Association of British Insurers. Please note that insurance group ratings are purely advisory. They are used by insurers (ABI members and Lloyd's syndicates) as one of the factors in calculating premiums. Insurers are not required to follow the advisory group ratings and they may depart from them if they so wish.

‡ These vehicles are WLTP (Worldwide Harmonised Light-Duty Vehicles Test Procedure) type approved vehicles. More information is available at www.volkswagen.co.uk/need-help/wltp.

† Please note these models may no longer be available to order, or only be available from stock and not available to factory order.

SCR (Selective Catalytic Reduction) requires AdBlue®, *please click here* or visit www.volkswagen.co.uk/technology/engines/adblue for more details.

RDE2 refers to Real Driving Emissions Step 2.

Volkswagen Service Plan – Retail sales only.

For vehicles under 1 year old set to the Fixed Service regime that has not had its first service, comprising first two manufacturer's scheduled services:

– 'Oil service' including oil filter change

– 'Oil service' including oil filter change and 'Inspection service' plus a pollen filter replacement (if required)

Excludes electric vehicles. Service plan covers first two consecutive services, limited to 1x 'Oil service' and 1x 'Oil and Inspection service'. T&Cs apply: All vehicles must be set to the Fixed Service regime by the retailer. Maximum age of car is 12 months (Service plan must be taken out before first service is due). Additional work, including wear and tear is excluded. Servicing must be carried out in line with the requirement of the Service Schedule. All work must be carried out by an Authorised Volkswagen Repairer. Offers may be varied or withdrawn at any time. Plan validity is dependent on required payments received. Administered by Volkswagen Financial Services. Retail sales only. For pricing and further details, please consult your authorised Volkswagen retailer or visit www.volkswagen.co.uk

Prices, specifications, features, technical and other information (including fuel consumption, CO_2 emissions and range) are updated regularly and are subject to change without notice (this may include changes between order and delivery). There may be a delay in updates to our materials – always consult your authorised Volkswagen retailer for the latest information.

Volkswagen UK may change RRPs at any time (this includes where there are government changes in regulation and/or legislation). There may be a delay to any RRP displaying correctly on our materials. Always obtain prices from your chosen authorised Volkswagen retailer.

VAT IS CALCULATED AT 20%. EFFECTIVE FROM 24 FEBRUARY 2020.

Model prices – Passat Estate.

PETROL/ELECTRIC HYBRID 5-DOOR ESTATE RANGE.		RDE2 Compliant	Fuel		Transmission	Combined output, PS	CO_2 emission, g/km [1]	Basic Recommended Retail £	VAT £	Total Recommended Retail £	Additional 'On the road' Costs £ [2]	Manufacturer's Recommended 'On the road' Retail £ [2]	P11D Value £ [3]	BIK % [4]	ABI Insurance Group [5]
GTE ‡	1.4 ltr TSI PHEV ‡	No	Hybrid	5-door	6-spd auto DSG	218	36	31,350.00	6,270.00	**37,620.00**	**690.00**	**38,310.00**	**38,255.00**	**16**	**26E**
GTE ADVANCE ‡	1.4 ltr TSI PHEV ‡	No	Hybrid	5-door	6-spd auto DSG	218	37	33,475.00	6,695.00	**40,170.00**	**690.00**	**40,860.00**	**40,805.00**	**16**	**28E**

1 These figures were obtained using a combination of battery power and fuel. The Passat Saloon GTE is a plug-in hybrid vehicle requiring mains electricity for charging. Figures shown are for comparability purposes; only compare fuel consumption, CO_2 and electric range figures with other vehicles tested to the same technical procedures. These figures may not reflect real life driving results, which will depend upon a number of factors including the accessories fitted (post-registration), variations in weather, driving styles and vehicle load. There is a new test used for fuel consumption and CO_2 figures (known as WLTP). The CO_2 figures shown however, are based on a calculation designed to be equivalent to the outgoing (NEDC) test cycle and will be used to calculate vehicle tax on first registration. For more information, please see www.volkswagen.co.uk/need-help/wltp or consult your authorised Volkswagen retailer. 2 For full details of 'First year rate' VED (Vehicle Excise Duty), delivery to retailer, number plates and vehicle first registration fee included in the recommended 'On the road' retail price, *please click here* 3 P11D value = Total recommended retail price + delivery to retailer £509.17, + number plates £20, + VAT £105.83 (calculated by reference to total of delivery to retailer + number plates). P11D value is based on standard specification model with no factory-fitted options or other accessories. 4 The BIK % figure quoted includes the 4% diesel supplement, where applicable. 5 The ABI insurance group is the recommended insurance rating set by the Association of British Insurers. Please note that insurance group ratings are purely advisory. They are used by insurers (ABI members and Lloyd's syndicates) as one of the factors in calculating premiums. Insurers are not required to follow the advisory group ratings and they may depart from them if they so wish.
‡ These vehicles are WLTP (Worldwide Harmonised Light-Duty Vehicles Test Procedure) type approved vehicles. More information is available at www.volkswagen.co.uk/need-help/wltp.
RDE2 refers to Real Driving Emissions Step 2.

Volkswagen Service Plan – Retail sales only.

For vehicles under 1 year old set to the Fixed Service regime that has not had its first service, comprising first two manufacturer's scheduled services:

- 'Oil service' including oil filter change
- 'Oil service' including oil filter change and 'Inspection service' plus a pollen filter replacement (if required)

Excludes electric vehicles. Service plan covers first two consecutive services, limited to 1x 'Oil service' and 1x 'Oil and Inspection service'. T&Cs apply: All vehicles must be set to the Fixed Service regime by the retailer. Maximum age of car is 12 months (Service plan must be taken out before first service is due). Additional work, including wear and tear is excluded. Servicing must be carried out in line with the requirement of the Service Schedule. All work must be carried out by an Authorised Volkswagen Repairer. Offers may be varied or withdrawn at any time. Plan validity is dependent on required payments received. Administered by Volkswagen Financial Services. Retail sales only. For pricing and further details, please consult your authorised Volkswagen retailer or visit www.volkswagen.co.uk

Prices, specifications, features, technical and other information (including fuel consumption, CO_2 emissions and range) are updated regularly and are subject to change without notice (this may include changes between order and delivery). There may be a delay in updates to our materials – always consult your authorised Volkswagen retailer for the latest information.

Volkswagen UK may change RRPs at any time (this includes where there are government changes in regulation and/or legislation).
There may be a delay to any RRP displaying correctly on our materials. Always obtain prices from your chosen authorised Volkswagen retailer.

VAT IS CALCULATED AT 20%. EFFECTIVE FROM 24 FEBRUARY 2020.

Standard items of equipment: SE.

VOLKSWAGEN SERVICE

- 3-year/60,000 miles warranty (whichever is soonest)
- 3-year paintwork warranty
- 12-year body protection warranty
- Volkswagen Roadside Assistance
- Exclusions and terms apply, please click here for more details

WHEELS AND SUSPENSION

- Alloy wheels, four 7J x 17" 'Istanbul' with 215/55 R17 low rolling resistance tyres and anti-theft wheel bolts
- Steel space saver spare wheel

EXTERIOR

- All LED headlights range adjustable with reflector technology. Including 12 separate LED daytime running lights which also perform the indicator function
- Black radiator grille with chrome louvres
- Body-coloured bumpers
- Body-coloured door handles
- Body-coloured door mirrors with integrated indicators
- Chrome-plated side window surrounds
- Exterior temperature gauge and frost warning function
- Front fog lights with static cornering function and chrome trimmed surround
- Galvanised body
- 'Gloss Black' B-pillar trim
- Rear lights incorporating LED technology
- Rear number plate lights incorporating LED technology
- Rear windscreen wash/wipe (Estate only)
- Roof rails, black (Estate only)
- Windscreen wipers with intermittent operation

INTERIOR

- Carpet mats, front and rear
- 'Cross Hatch' decorative inserts in dash, centre console and door panels
- Chrome-plated instrument and air vent surrounds
- Cup holders with covers, front x 2
- Extending luggage compartment cover, stowable (Estate only)
- Front centre armrest with storage compartment and two rear air vents
- Glovebox, cooled, illuminated and lockable
- Height and reach adjustable steering wheel
- Interior lighting: front and rear with interior delay and dimming function
- Leather trimmed three-spoke multifunction steering wheel and gear knob
- LED entrance/warning lights in front doors
- Load lashing points x 4, in luggage compartment
- Load sill protection – plastic (Estate only)
- Load-through provision
- Luggage compartment light
- Reading lights, front and rear x 2 incorporating LED technology
- Seating
  - Upholstery – 'Django' cloth
  - Driver's and front passenger's seat height adjustment
  - Front seats with lumbar adjustment
  - ergoComfort driver's seat with seat cushion tilt adjustment, thigh support and electric backrest adjustment
- Rear seat centre armrest with storage compartment
- Split folding rear seat backrests 60:40 (Saloon)
- Split folding rear seat backrest 40:20:40 (Estate)

INTERIOR (CONTINUED)

- Storage compartment in driver's door for 1.0 litre bottle
- Storage compartment in roof console with cover
- Storage compartments in front passenger's door for 1.5 litre bottle
- Storage compartment in rear doors
- Vanity mirrors, illuminated
- Variable boot floor, height adjustable and removable (Estate only)
- White instrument lighting
- 12V socket in front centre console
- 12V socket in luggage compartment

IN-CAR ENTERTAINMENT AND COMMUNICATIONS

- Aerial integrated into rear windscreen
- Composition Colour infotainment system
  - 6.5" colour touch-screen
  - Music playback from MP3, WMA and AAC files
  - 4 x 20 watt output
  - 8 speakers, front and rear
- Wireless 'App-Connect'[1]
  - Combines the functionality of Apple 'CarPlay', Google 'Android Auto' and 'MirrorLink' ™ allowing 'mirroring' of smartphone display on the infotainment touch-screen via wireless connection

WE CONNECT

We Connect[2]

- Driver and vehicle integration via We Connect Portal or We Connect app
- Provides continuous interaction between the driver, vehicle and Volkswagen, via integrated SIM-card connectivity
- Driver and vehicle integration with Volkswagen call centre or server for: 'eCall' – Emergency call service for SOS calls to emergency response
- Vehicle based services for: Car breakdown call, Vehicle status, Doors and lights, Automatic accident notification, Vehicle health report, Driving data, Parking position and Service schedule

We Connect Plus[3] – 3-year subscription

- Vehicle based services for: Area alert, Speed alert, Horn and indicators, Online anti-theft alarm, Online auxiliary heater, Online ventilation control, Lock and unlock

1 Only operable in conjunction with compatible smartphones including iPhone 5 and above. Display and operation of certified apps including audio and voice control (if supported by the app). Usage of certified apps only while driving. Please see www.volkswagen.co.uk to check smartphone compatibility.
2 To use the free We Connect app you will need a smartphone with iOS or Android operating system and a SIM-card with a data option. Depending on your mobile tariff, sending and receiving data online may incur additional charges (e.g. roaming charges), particularly if you are using We Connect abroad. For more information on We Connect services, go to www.portal.volkswagen-we.com or contact your Volkswagen retailer.
3 We Connect Plus services are accessed via a compatible mobile device. Please see www.portal.volkswagen-we.com for more information. The use of We Connect Plus entails exchanging large volumes of data. As such, we strongly recommend that you sign-up for a flat rate data plan with your mobile network provider. After the initial 3-year We Connect Plus contract, an annual subscription is chargeable for the continuation of We Connect Plus services.

The specifications listed are for information purposes only as our products are continually updated and changes may be made to the specifications at any time. If you require any specific feature, please consult your authorised Volkswagen retailer who is regularly updated with any change in specification. Specifications are subject to change without notice.

Standard items of equipment: SE.

SAFETY AND SECURITY

ABS (Anti-lock Braking System) – includes BAS (Brake Assist System) and EBD (Electronic Brake-pressure Distribution)

Airbags
- Curtain airbag system, for front and rear passengers, including front side impact airbag
- Driver's and front passenger's airbags with front passenger's airbag deactivation switch
- Driver's knee airbag
- Rear seat side impact airbags, outer

Alarm with interior protection, with deactivation via infotainment system

Automatic leaving home and manual coming home lighting functions

Automatic Post-Collision Braking System

Disc brakes, front and rear

Driver's and front passenger's safety-optimised head restraints, longitudinal and height adjustable

Electronic engine immobiliser

ESC (Electronic Stability Control) – includes EDL (Electronic Differential Lock) and ASR (Traction Control), EDTC (Engine Drag Torque Control) and trailer stabilisation function

First aid kit

Front head restraints with longitudinal and height adjustment

Height-adjustable front three-point seat belts with tensioners

High level 3rd brake light

Isofix child seat preparation, outer rear seats

Misfuel prevention device

PreCrash preventive occupant protection

Proactive occupant protection – using sensors from the Front Assist monitoring system to detect critical situations with elevated accident potential from the front

Remote central locking with 2 remote keys

Rigid safety cell with front and rear crumple zones

Tyre pressure loss indicator

Model shown is Passat R-Line with optional 19" 'Pretoria' Dark Graphite alloy wheels and metallic signature paint.

SAFETY AND SECURITY (CONTINUED)

Warning buzzer and light for front seat belts if unfastened

Warning light for rear seat belts if unfastened

Warning lights for open boot lid or tailgate and doors

Warning reflector in all doors

3 rear head restraints, height adjustable

3 rear three-point seat belts

COMFORT AND CONVENIENCE

Air conditioning, manual

Automatic dimming interior rear-view mirror

Automatic headlights on

Electric windows, front and rear

Electrically heated and adjustable door mirrors

Heated rear window

One-touch indicator turn signal

Rain sensor

DRIVER'S ASSISTANCE

Adaptive Cruise Control (ACC), including Front Assist, radar sensor controlled distance monitoring system, City emergency braking system, cruise control and speed limiter

Battery regeneration (recuperation – energy recovery during braking)

Driver Alert system

Driver profile selection, personalisation:
- Wing mirrors
- Map and route settings
- Radio stations
- Air conditioning
- Central locking and windows
- Interior lighting

Dusk sensor, automatic driving lights

Hill hold function

Electronic parking brake – with auto hold function

DRIVER'S ASSISTANCE (CONTINUED)

Multifunction computer, includes visual gear change recommendation for improved fuel consumption

Lane Assist

Parking sensors, front and rear – ultrasonic, audible with audio volume reduction when activated and optical parking display via vehicle's infotainment system

Power-assisted steering, speed-sensitive

Remote boot or tailgate unlocking

Speedo and rev counter, electronic odometer, trip, service interval display and fuel gauge

Start/Stop function

Traffic Jam Assist

Warning light for low washer fluid

Additional items of standard equipment: SE Nav (over SE).

IN-CAR ENTERTAINMENT AND COMMUNICATIONS

Discover Navigation infotainment system (in addition to Composition Colour infotainment system)
- 8.0" colour touch-screen
- Bluetooth telephone and audio connection for compatible devices [1]
- Branded points of interest
- Car information display
- Dynamic navigation based on TMC+
- MDI (Multi Device Interface), via USB connection – compatible products only
- Preloaded European navigation data
- Simultaneous pairing of 2 compatible mobile devices
- SMS functionality – read, compose and send SMS messages using touch-screen display (when stationary, compatible Android smartphones only)
- Speed Limit Display [2]
- Title and cover art display
- 'Think Blue. Trainer.' Driver tips and journey analysis
- Three route options (Fast, Short, Eco)
- 1 x USB connection, USB charging socket (compatible products only)
- 2D/3D map view

Premium USB cable (choice of either Apple or Android smartphone compatibility)

IN-CAR ENTERTAINMENT AND COMMUNICATIONS (CONTINUED)

Wireless 'App-Connect' [3]
- Combines the functionality of Apple 'CarPlay', Google 'Android Auto' and 'MirrorLink' ™ allowing 'mirroring' of smartphone display on the infotainment touch-screen via wireless connection

WE CONNECT

We Connect Plus [4] – 3-year subscription
- Vehicle based services for: Area alert, Speed alert, Horn and indicators, Online anti-theft alarm, Online auxiliary heater, Online ventilation control, Lock and unlock
- Navigation based services for: Online traffic information, Online route calculations, Online destination and route import, Petrol stations, Charging points, Parking spaces, Online map updates, Online POI search

1 Devices must be Bluetooth HFP (Hands Free Profile) compatible, please contact your authorised Volkswagen retailer for specific phone compatibility.
2 Speed Limit Display only reflects national speed limits and does not show temporary speed limit restrictions, or where permanent changes to speed limits are made in-between map updates.
3 Only operable in conjunction with compatible tablets and smartphones including iPhone 5 and above. Please see www.volkswagen.co.uk to check compatibility.
4 We Connect Plus services are accessed via a compatible mobile device. Please see www.portal.volkswagen-we.com for more information. The use of We Connect Plus entails exchanging large volumes of data. As such, we strongly recommend that you sign-up for a flat rate data plan with your mobile network provider. After the initial 3-year We Connect Plus contract, an annual subscription is chargeable for the continuation of We Connect Plus services.

The specifications listed are for information purposes only as our products are continually updated and changes may be made to the specifications at any time. If you require any specific feature, please consult your authorised Volkswagen retailer who is regularly updated with any change in specification. Specifications are subject to change without notice.

Additional items of standard equipment: SEL (over SE).

WHEELS AND SUSPENSION

Alloy wheels, four 7J x 17" 'Nevilles' Black with 215/55 R17 low rolling resistance tyres and anti-theft wheel bolts

EXTERIOR

Rear tinted glass from B-pillar backwards, approx. 65% tinted

Roof rails, silver anodised (Estate only)

INTERIOR

Leather trimmed three-spoke multifunction steering wheel and gear knob including paddle shift (auto DSG only)

Seating

- Heated front seats
- Upholstery – 'Vienna' leather*

IN-CAR ENTERTAINMENT AND COMMUNICATIONS

Discover Navigation infotainment system (in addition to Composition Colour infotainment system)

- 8.0" colour touch-screen
- Bluetooth telephone and audio connection for compatible devices [1]
- Branded points of interest
- Car information display
- DAB digital radio receiver
- Dynamic navigation based on TMC+
- MDI (Multi Device Interface), via USB connection – compatible products only
- Preloaded European navigation data
- Simultaneous pairing of 2 compatible mobile devices
- SMS functionality – read, compose and send SMS messages using touch-screen display (when stationary, compatible Android smartphones only)
- Speed Limit Display [2]
- Title and cover art display
- 'Think Blue. Trainer.' Driver tips and journey analysis
- Three route options (Fast, Short, Eco)
- 1 x USB connection, USB charging socket (compatible products only)
- 2D/3D map view

Premium USB cable (choice of either Apple or Android smartphone compatibility)

Voice activation

IN-CAR ENTERTAINMENT AND COMMUNICATIONS (CONTINUED)

Wireless 'App-Connect' [3]

- Combines the functionality of Apple 'CarPlay', Google 'Android Auto' and 'MirrorLink' ™ allowing 'mirroring' of smartphone display on the infotainment touch-screen via wireless connection

WE CONNECT

We Connect Plus [4] – 3-year subscription

- Vehicle based services for: Area alert, Speed alert, Horn and indicators, Online anti-theft alarm, Online auxiliary heater, Online ventilation control, Lock and unlock
- Navigation based services for: Online traffic information, Online route calculations, Online destination and route import, Petrol stations, Charging points, Parking spaces, Online map updates, Online POI search

COMFORT AND CONVENIENCE

Remote electrically heated, adjustable and foldable door mirrors, including automatic dimming function on driver's side, door mirror puddle lights and reverse activated kerb-view adjustment on passenger's side

DRIVER'S ASSISTANCE

Multifunction colour display (not R-Line Edition and GTE Advance)

Model shown is Passat SEL with optional 'IQ. Light' LED matrix headlights, 17" 'London' alloy wheels, panoramic sunroof and metallic paint.

* Some parts of leather interior will contain artificial leather.

1 Devices must be Bluetooth HFP (Hands Free Profile) compatible, please contact your authorised Volkswagen retailer for specific phone compatibility.

2 Speed Limit Display only reflects national speed limits and does not show temporary speed limit restrictions, or where permanent changes to speed limits are made in-between map updates.

3 Only operable in conjunction with compatible tablets and smartphones including iPhone 5 and above. Please see www.volkswagen.co.uk to check compatibility.

4 We Connect Plus services are accessed via a compatible mobile device. Please see www.portal.volkswagen-we.com for more information. The use of We Connect Plus entails exchanging large volumes of data. As such, we strongly recommend that you sign-up for a flat rate data plan with your mobile network provider. After the initial 3-year We Connect Plus contract, an annual subscription is chargeable for the continuation of We Connect Plus services.

The specifications listed are for information purposes only as our products are continually updated and changes may be made to the specifications at any time. If you require any specific feature, please consult your authorised Volkswagen retailer who is regularly updated with any change in specification. Specifications are subject to change without notice.

Additional items of standard equipment:
R-Line (over SEL).

WHEELS AND SUSPENSION

Alloy wheels, four 8J x 18" 'Monterrey' Grey Metallic with 235/45 R18 low rolling resistance tyres and anti-theft wheel bolts

Sports suspension, lowered

EXTERIOR

'R-Line' styling pack – 'R-Line' design front and rear bumpers, radiator grille, side skirts and rear spoiler [1]

INTERIOR

Ambient lighting

Black rooflining

'Dark Diamond Flag' decorative inserts in dash and door panels

Leather trimmed three-spoke multifunction steering wheel with aluminium inserts and 'R-Line' logo

Seating

- Upholstery – 'Nappa' leather [2] and 'Carbon Optic' side bolsters
- Front seats with embroidered 'R-Line' logo on backrest

Stainless steel pedals – clutch, brake and accelerator (brake and accelerator pedals only on auto DSG models)

Unique 'R-Line' carpet mats, front and rear

Unique 'R-Line' decorative inserts for dash and door panels

Unique 'R-Line' door sill protectors

COMFORT AND CONVENIENCE

Climate control – 3Zone electronic air conditioning with automatic air recirculation

'Easy open' full electric tailgate opening and closing function, operated via foot movement under rear or from driver's door

Heated windscreen washer jets

Keyless entry, including Start/Stop button

SAFETY AND SECURITY

XDS electronic differential lock for improved traction and handling (2.0 ltr BiTDI SCR 4MOTION engine only)

Model shown is Passat R-Line with optional 'IQ. Light' LED matrix headlights, 19" 'Pretoria' Dark Graphite alloy wheels and metallic signature paint.

1 Estate only.
2 Some parts of leather interior will contain artificial leather.

The specifications listed are for information purposes only as our products are continually updated and changes may be made to the specifications at any time. If you require any specific feature, please consult your authorised Volkswagen retailer who is regularly updated with any change in specification. Specifications are subject to change without notice.

Additional items of standard equipment:

R-Line Edition† (over R-Line) – Estate only.

Model shown is Passat Estate R-Line Edition.

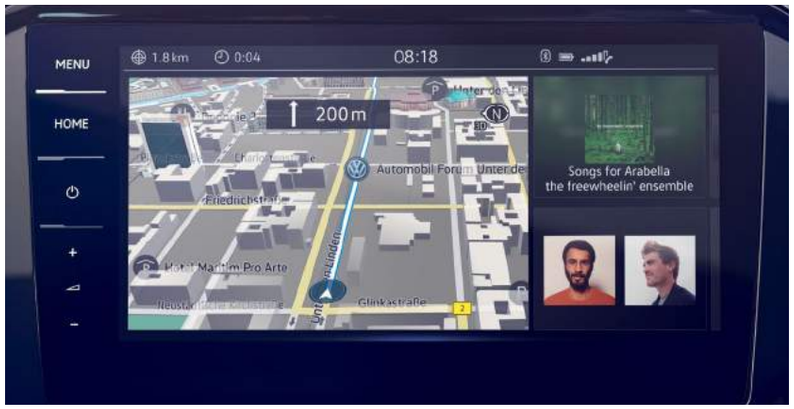

WHEELS AND SUSPENSION

Alloy wheels, four 8J x 19" 'Pretoria' Dark Graphite with 235/40 R19 tyres and anti-theft wheel bolts

Dynamic Chassis Control (DCC), variable suspension settings – choice of four settings: Sport, Comfort, Individual and Normal

EXTERIOR

Black door mirrors with integrated indicators

'Edition Black' styling pack – Black front grille, side window surrounds, roof, side skirts, fog light surrounds and roof rails

'IQ. Light' LED matrix headlights

- All LED interactive matrix dipped and main beam headlights, daytime running lights, Including dual 'U-shaped' LED daytime running lights
- 12 separate LED lights which perform the indicator function and Dynamic curve lighting
- Information from the front camera, navigation's digital map data, GPS information, steering wheel angle and current driving speed activates specific LEDs individually for optimal lighting
- Includes specific lighting functions for: city lighting, motorway lighting, motorway dipped beam, poor weather light and sign glare reduction

IN-CAR ENTERTAINMENT AND COMMUNICATIONS

Discover Navigation Pro infotainment system (in addition to Discover Navigation infotainment system)

- 9.2" colour touch-screen
- Voice activated control system for telephone and navigation functions
- 3D map view
- 64 GB SSD hard drive

COMFORT AND CONVENIENCE

Ambient lighting Plus

DRIVER'S ASSISTANCE

Active Info Display

- 10.25" high resolution TFT dash display screen with customisable menus and information (in lieu of multifunction colour display)

Area view

- Front, rear and side cameras to provide 360° exterior view of vehicle displayed via vehicle's infotainment system

SAFETY AND SECURITY

XDS electronic differential lock for improved traction and handling

† Please note these models may no longer be available to order, or only be available from stock and not available to factory order.

The specifications listed are for information purposes only as our products are continually updated and changes may be made to the specifications at any time. If you require any specific feature, please consult your authorised Volkswagen retailer who is regularly updated with any change in specification. Specifications are subject to change without notice.

Additional items of standard equipment: GTE (over SEL).

WHEELS AND SUSPENSION

Tyre mobility kit (in lieu of steel space saver spare wheel)

EXTERIOR

'Blue' brake callipers

Charging point inlet on radiator grille

Trapezoid exhaust tailpipes, left and right

Unique 'C' signature GTE front LED daytime running lights in bumper (in lieu of front fog lights)

Unique 'GTE' badging

Unique 'GTE' radiator grille with blue strip

INTERIOR

Blue ambient lighting

Leather trimmed gear knob gaiter with blue contrast stitching

Unique 'GTE' instrument cluster

COMFORT AND CONVENIENCE

Climate control – 3Zone electronic air conditioning with automatic air recirculation

ELECTRIC

Two charging cables – 16amp AC cable for wallbox/chargepoints (mode 3) and 10amp mains charge cable (mode 2)

Socket AC type 2

DRIVER'S ASSISTANCE

Driver profile selection

- e-mode
- Hybrid mode
- Battery charge mode
- Battery hold mode
- 'GTE' mode

'e-sound', exterior sound generator when driving in e-mode

WE CONNECT

We Connect Plus[1] – 3-year subscription

- Vehicle based services for: Area alert, Speed alert, Horn and indicators, Online anti-theft alarm, Online auxiliary heater, Online ventilation control, Lock and unlock, Remote departure times, Remote air conditioning and Remote charging
- Navigation based services for: Online traffic information, Online route calculations, Online destination and route import, Petrol stations, Charging points, Parking spaces, Online map updates, Online POI search

Model shown is Passat Estate GTE with optional 'IQ. Light' LED matrix headlights, 18" 'Liverpool' alloy wheels and premium signature paint.

1 We Connect Plus services are accessed via a compatible mobile device. Please see www.portal.volkswagen-we.com for more information. The use of We Connect Plus entails exchanging large volumes of data. As such, we strongly recommend that you sign-up for a flat rate data plan with your mobile network provider. After the initial 3-year We Connect Plus contract, an annual subscription is chargeable for the continuation of We Connect Plus services.

The specifications listed are for information purposes only as our products are continually updated and changes may be made to the specifications at any time. If you require any specific feature, please consult your authorised Volkswagen retailer who is regularly updated with any change in specification. Specifications are subject to change without notice.

Additional items of standard equipment: GTE Advance (over GTE).

WHEELS AND SUSPENSION

Alloy wheels, four 8J x 18" 'Monterrey' Grey Metallic with 235/45 R18 low rolling resistance tyres and anti-theft wheel bolts

EXTERIOR

'IQ. Light' LED matrix headlights

- All LED interactive matrix dipped and main beam headlights, daytime running lights, Including dual 'U-shaped' LED daytime running lights
- 12 separate LED lights which perform the indicator function and Dynamic curve lighting
- Information from the front camera, navigation's digital map data, GPS information, steering wheel angle and current driving speed activates specific LEDs individually for optimal lighting
- Includes specific lighting functions for: city lighting, motorway lighting, motorway dipped beam, poor weather light and sign glare reduction

IN-CAR ENTERTAINMENT AND COMMUNICATIONS

Discover Navigation Pro infotainment system (in addition to Discover Navigation infotainment system)

- 9.2" colour touch-screen
- Voice activated control system for telephone and navigation functions
- 3D map view
- 64 GB SSD hard drive

COMFORT AND CONVENIENCE

'Easy open' full electric tailgate opening and closing function, operated via foot movement under rear or from driver's door

Keyless entry, including Start/Stop button

DRIVER'S ASSISTANCE

Active Info Display

- 10.25" high resolution TFT dash display screen with customisable menus and information (in lieu of multifunction colour display)

The specifications listed are for information purposes only as our products are continually updated and changes may be made to the specifications at any time. If you require any specific feature, please consult your authorised Volkswagen retailer who is regularly updated with any change in specification. Specifications are subject to change without notice.

Additional items of standard equipment: Alltrack (over R-Line) – Estate only.

WHEELS AND SUSPENSION

- Alloy wheels, four 7J x 18" 'Kalamata' with 245/45 R18 self-sealing tyres and anti-theft wheel bolts
- Full size alloy spare wheel
- Increased ground clearance, raised by approx. 27.5mm
- Off-road suspension

EXTERIOR

- 'Alltrack' styling pack – uniquely shaped off-road front and rear bumpers
- Chrome trimmed radiator grille and front air intake
- Matt-chrome effect and anthracite side sill protection
- Matt-chrome effect door mirrors
- Matt-chrome effect underbody protection, front and rear
- Trapezoid exhaust tailpipes, left and right
- Unique 'Alltrack' badging
- Wheel arch protection, anthracite

INTERIOR

- Ambient lighting
- 'Tracks' decorative inserts in dash and door panels
- Seating
  - Upholstery – 'Summit' cloth

DRIVER'S ASSISTANCE

- Four wheel drive – 4MOTION
- Off-road setting, including hill descent assist

Model shown is Passat Alltrack with optional 19" 'Albertville' alloy wheels and metallic paint.
Roof bars are available as an accessory. Please refer to the *Accessories section*, or visit www.volkswagen.co.uk for full availability of products.

The specifications listed are for information purposes only as our products are continually updated and changes may be made to the specifications at any time. If you require any specific feature, please consult your authorised Volkswagen retailer who is regularly updated with any change in specification. Specifications are subject to change without notice.

Driver's assistance systems.

Good assistants are usually hard to find. It's different in the Passat. Here you will find numerous intelligent driver assistance systems which are grouped at Volkswagen under the name IQ.Drive. IQ.Drive stands for all assistance systems that already exist today and that we are developing for tomorrow and the future. In the Passat you can benefit from innovative features such as 'Traffic jam assist', 'Emergency Assist' and many more.

01

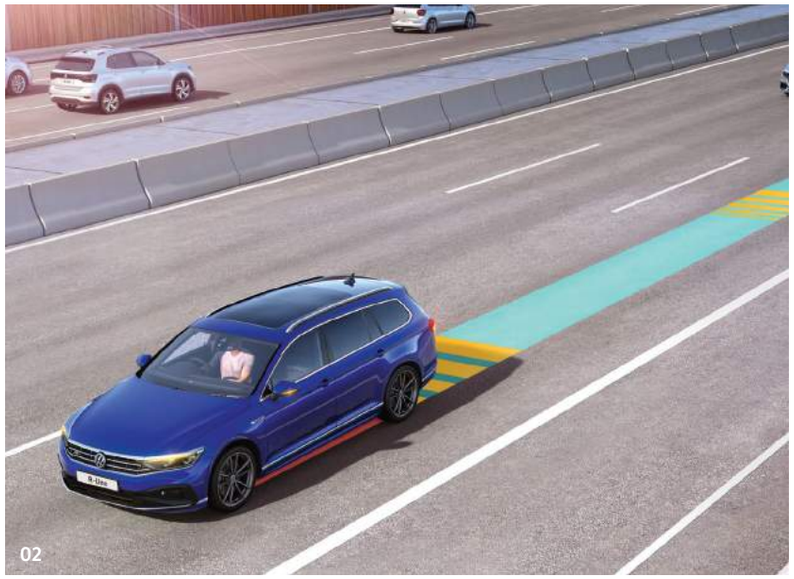

02

03

01 Whether on business or leisure travel, if you travel frequently, the Traffic jam assist system offers you assistance from motorways to city congestion traffic. **Traffic jam assist** can take into account the distance to the traffic ahead and adjust the speed accordingly. In conjunction with the DSG dual clutch transmission, you can even drive relaxed through traffic jams and stop-and-go traffic. It detects if traffic is stopping and slows your vehicle to a standstill if necessary. Once the car in front pulls away, the system recognises this and sets the vehicle in motion. Standard on all models.

02 Emergency Assist can help even further should a driver medical emergency situation arise. In conjunction with the DSG gearbox, the system recognises an incapacity of the driver and slows the car down in its lane to a standstill if necessary. As soon as the system cannot detect any steering, braking or acceleration activity, it alerts the driver. If the driver remains inactive, it automatically activates the hazard warning lights to alert other road users. Standard on all models in conjunction with the DSG gearbox.

03 Adaptive Cruise Control (ACC) is a radar sensor controlled distance monitoring system that utilises a front mounted camera to set a distance to the vehicle in front and maintain it up to a predetermined set speed by automatically accelerating and braking as necessary. The system adds speed and cornering assistance by using information from the vehicle's navigation system if fitted. Standard on all models.

Please note: The intelligent technology of Adaptive Cruise Control (ACC) with predictive cruise control cannot overcome the laws of physics and functions only within the limits of the system. It is the driver's responsibility to have full concentration and control of the vehicle, as well as ensuring appropriate speeds by observing the maximum speed limits and road positioning of the car at all times.

Models shown are Passat Estate R-Line with optional 19" 'Pretoria' Dark Graphite alloy wheels, panoramic sunroof and metallic signature paint.
Image 02 is Passat Estate R-Line with optional 'IQ. Light' LED matrix headlights, 19" 'Pretoria' Dark Graphite alloy wheels, panoramic sunroof and metallic signature paint.

Infotainment and connectivity.

The design of the Passat is not only ground-breaking, but in the technologically advanced cockpit you will also find the very latest in digital communication and navigation systems, keeping you connected and informed. It also includes voice control for the Discover Navigation Pro which lets you conveniently choose your favourite music and plan your route while keeping your eyes on the road.

01

01 The optional **Head-up Display**[1] presents driving information directly in your field of vision. Speed, traffic signs and information about the assistance systems, as well as warnings and navigation data are projected on to the high-quality retractable screen transparently displayed in front of the windscreen, enabling you to read everything clearly while keeping your focus on the road ahead. Optional on SE, SE Nav, SEL, R-Line, GTE, GTE Advance and Alltrack models.

1 Please note, use of polarised lenses may impair the visibility of the Head-up Display.

01 The **Composition Colour infotainment system** is equipped with an FM receiver, 6.5 inch colour touch-screen and facilitates music playback from MP3, WMA and AAC files through eight speakers, front and rear. Standard on SE models.

02 The **Discover Navigation touch-screen navigation/infotainment system with We Connect Plus**[1] builds upon the Composition Colour system, but with additional features enabling you to easily manage not only your music, but also navigation data and a broad range of vehicle information on the 8.0 inch colour touch-screen. The system includes a DAB digital radio receiver (on SEL models and above) and an MDI (Multi Device Interface) via USB connection for compatible products. Also included is Bluetooth telephone and audio connection for compatible devices[2], simultaneous pairing of two compatible mobile devices, SMS functionality – allowing you to read, compose and send SMS messages using the touch-screen display to a compatible Android smartphone (while the vehicle is stationary), title and compatible cover art display, and also offers preloaded European navigation data, 2D/3D map view, three calculated route choices (Fast, Short and Eco), dynamic navigation based on TMC+, branded points of interest and Speed Limit Display[4]. 3-years We Connect Plus access makes it possible to integrate 'traffic information online' into route guidance and transfer public and personal points of interest to the navigation system. The service also includes information for fuel station location and pricing, weather and news feeds. Finally, car information display and 'Think Blue. Trainer.' – provide journey analysis and driver tips on your journey. Standard on SE Nav, SEL, R-Line, GTE and Alltrack models.

03 The **Discover Navigation Pro touch-screen navigation infotainment system with integrated voice activation and We Connect Plus**[2] can be operated intuitively via the 9.2 inch colour touch-screen, enabling you to manage music and navigation data. Gesture control for use with various different menus, responds to a sideways swiping gesture and confirms a successful swipe with a sound effect, which can be deactivated if required. Eight powerful speakers deliver great acoustics while it also offers a 64 GB SSD hard drive, voice control and a USB connection. The Discover Navigation Pro also features We Connect Plus providing online access to a range of useful information such as traffic, fuel station location and pricing, weather and news feeds. The **Active Info Display** is ideal for those who love the latest technology, providing a system that can be tailored to suit your specific preferences. A fully configurable, interactive, 10.25 inch high resolution TFT dash display replaces the standard instrument cluster, displaying vehicle data and information on your dashboard. A choice of five different modes enables you to customise the screen as you wish, showing large or small dials as you prefer, with a number of items displayed behind. In navigation mode, for example, you can move the speedometer and rev counter to the edge of the display, creating more space for the navigational map. If you wish, you can include driving, navigation and assistance functions within the graphics of the speedometer. As the Active Info Display is linked to all other assistance systems in the vehicle, any data shown in the centre console of the infotainment system, such as phone numbers or compatible cover art, can also be displayed on the dash, conveniently placed directly within the driver's optimum field of vision. Standard on R-Line Edition and GTE Advance, and optional on all other models.

01

02

03

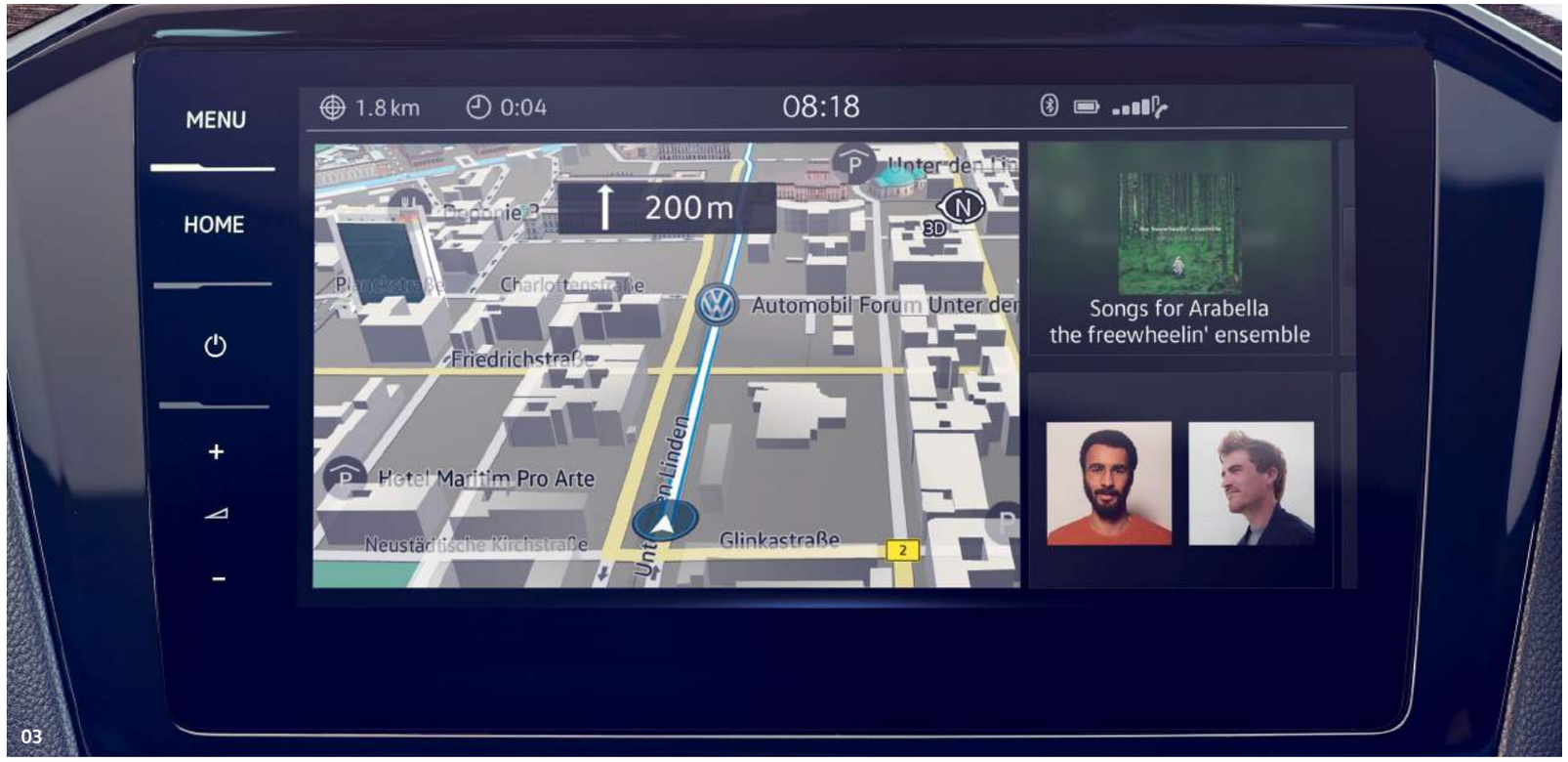

03

1 We Connect Plus services are accessed via a compatible mobile device. Please see www.portal.volkswagen-we.com for more information. The use of We Connect Plus entails exchanging large volumes of data. As such, we strongly recommend that you sign-up for a flat rate data plan with your mobile network provider. After the initial 3-year We Connect Plus contract, an annual subscription is chargeable for the continuation of We Connect Plus services. To use the free We Connect app you will need a smartphone with iOS or Android operating system and a SIM-card with a data option. Depending on your mobile tariff, sending and receiving data online may incur additional charges (e.g. roaming charges), particularly if you are using We Connect abroad. For more information on We Connect services, go to www.portal.volkswagen-we.com or contact your Volkswagen retailer.
2 Devices must be Bluetooth HFP (Hands Free Profile) compatible, please contact your authorised Volkswagen retailer for specific device compatibility.
3 Only operable in conjunction with compatible tablets and smartphones including iPhone 5 and above. Please see www.volkswagen.co.uk to check compatibility.
4 Speed Limit Display only reflects national speed limits and does not show temporary speed limit restrictions, or where permanent changes to speed limits are made in-between map updates.

Factory-fitted options.

WHEELS AND SUSPENSION

		SE	SE Nav	SEL	R-Line	R-Line Edition (Estate only)	GTE	GTE Advance	Alltrack (Estate only)	Basic RRP £ Excluding VAT	Total RRP £ Including VAT
17" 'London'	Four 7J x 17" 'London' with 215/55 R17 low rolling resistance tyres and anti-theft wheel bolts	O	O	O	–	–	–	–	–	208.33	**250.00**
17" 'Soho' Anthracite	Four 7J x 17" 'Soho' Anthracite with 215/55 R17 low rolling resistance tyres and anti-theft wheel bolts	O	O	O	–	–	–	–	–	208.33	**250.00**
17" 'Sebring' [1]	Four 7J x 17" 'Sebring' with 215/55 R17 low rolling resistance tyres and anti-theft wheel bolts	O	O	O	–	–	–	–	–	208.33	**250.00**
18" 'Oxford' Grey Metallic	Four 8J x 18" 'Oxford' Grey Metallic with 235/45 R18 low rolling resistance tyres and anti-theft wheel bolts	O	O	O	–	–	–	–	–	500.00	**600.00**
18" 'Oxford'	Four 8J x 18" 'Oxford' with 235/45 R18 low rolling resistance tyres and anti-theft wheel bolts	O	O	O	–	–	O	–	–	500.00	**600.00**
	Four 8J x 18" 'Oxford' with 235/45 R18 low rolling resistance tyres and anti-theft wheel bolts	–	–	–	–	–	–	O	–	250.00	**300.00**
18" 'Liverpool'	Four 8J x 18" 'Liverpool' with 235/45 R18 low rolling resistance tyres and anti-theft wheel bolts	O	O	O	–	–	O	–	–	500.00	**600.00**
	Four 8J x 18" 'Liverpool' with 235/45 R18 low rolling resistance tyres and anti-theft wheel bolts	–	–	–	–	–	–	O	–	250.00	**300.00**
18" 'Wolverton' Black diamond-turned	Four 8J x 18" 'Wolverton' black diamond-turned with 235/45 R18 tyres and anti-theft wheel bolts	–	–	–	O	–	–	O	–	208.33	**250.00**
19" 'Verona' Sterling Silver [1]	Four 8J x 19" 'Verona' Sterling Silver with 235/40 R19 tyres and anti-theft wheel bolts	–	–	–	O	–	–	–	–	500.00	**600.00**
19" 'Pretoria' Dark Graphite [1]	Four 8J x 19" 'Pretoria' Dark Graphite with 235/40 R19 tyres and anti-theft wheel bolts	–	–	–	O	●	–	–	–	829.17	**995.00**
19" 'Albertville'	Four 8J x 19" 'Albertville' with 245/40 R19 tyres and anti-theft wheel bolts	–	–	–	–	–	–	–	O	500.00	**600.00**
Dynamic Chassis Control (DCC)	Variable suspension settings. Choice of four settings: Sport, Comfort, Individual and Normal. *Not in conjunction with sports suspension. Standard on 2.0 ltr BiTDI 4MOTION 240 PS and 2.0 ltr TSI 4MOTION 272 PS models*	O	O	O	O	●	O	O	O	745.83	**895.00**
Full size alloy spare wheel		O	O	O	O	O	–	–	●	133.33	**160.00**
Sports suspension	Lowered by approx. 15mm. *Not in conjunction with Dynamic Chassis Control (DCC)*	O	O	O	●	–	–	–	–	212.50	**255.00**

1 Must be ordered in conjunction with full size alloy spare wheel.

Choosing larger alloy wheels than standard, as an option, may result in increased fuel consumption as well as higher CO_2 emissions and subsequently increased Vehicle Excise Duty (VED) band, and BIK rates paid by company car drivers may increase. This is due to the fact that larger wheels have both more aerodynamic drag and more mechanical drag, resulting in increased rolling resistance and increased wind resistance. As a result, the VED band that the vehicle falls into may increase from its original VED band when fitted with standard size wheels. In some instances, the recommended 'On the road' retail price paid for the vehicle may increase as a result of the increased VED rate. Please click here for full details.

● Standard equipment O Optional equipment – Not available. Factory-fitted options are subject to availability and extended delivery.

Volkswagen UK may change RRPs at any time (this includes where there are government changes in regulation and/or legislation).
There may be a delay to any RRP displaying correctly on our materials. Always obtain prices from your chosen authorised Volkswagen retailer.

VAT IS CALCULATED AT 20%. EFFECTIVE FROM 24 FEBRUARY 2020.

Factory-fitted options.

PAINT

		SE	SE Nav	SEL	R-Line	R-Line Edition (Estate only)	GTE	GTE Advance	Alltrack (Estate only)	Basic RRP £ Excluding VAT	Total RRP £ Including VAT
Non-Metallic	Urano Grey	O	O	O	O	–	O	O	O	No cost option	
	Pure White, Tornado Red	O	O	O	O	–	O	O	O	308.33	**370.00**
Metallic and Pearl Effect	Tamarind Brown, Manganese Grey, Reflex Silver, Pyrite Silver, Deep Black	O	O	O	O	–	O	O	O	516.67	**620.00**
	Bottle Green	–	–	–	–	–	–	–	O	516.67	**620.00**
Metallic Signature	Lapiz Blue	–	–	–	O	–	–	–	–	662.50	**795.00**
Ultra Metallic	Aquamarine Blue	O	O	O	O	–	–	–	O	662.50	**795.00**
Premium Signature	Oryx White	O	O	O	O	–	O	O	O	866.67	**1,040.00**

Please refer to *Paint and Combinations section*, or visit www.volkswagen.co.uk for full availability of paint colours.

EXTERIOR

'IQ. Light' LED matrix headlights	All LED interactive matrix dipped and main beam headlights, daytime running lights, Including dual 'U-shaped' LED daytime running lights. 12 separate LED lights which perform the indicator function and Dynamic curve lighting. Information from the front camera, navigation's digital map data, GPS information, steering wheel angle and current driving speed activates specific LEDs individually for optimal lighting. Includes specific lighting functions for: city lighting, motorway lighting, motorway dipped beam, poor weather light and sign glare reduction	O	O	O	O	●	O	●	O	1,262.50	**1,515.00**
Rear tinted glass	Rear tinted glass from B-pillar backwards, approx. 65% tinted	O	O	●	●	●	●	●	●	200.00	**240.00**
Towbar – swivelling	Swivelling towbar with electric release. 13-pin connection and 12 electrified poles for vehicle lighting plus additional power supply for caravan auxiliary battery charger, internal trailer lighting and fridge	O	O	O	O	–	O	O	O	775.00	**930.00**

INTERIOR

Black rooflining	*Only in conjunction with Titan Black cloth or Titan Black 'Vienna' leather*	O	O	O	●	●	O	O	O	204.17	**245.00**
Luggage net		O	O	O	O	–	O	O	O	58.33	**70.00**
Steering wheel – heated, multifunction, leather trimmed	Heated multifunction steering wheel	O[1]	O[1]	O[1]	O	–	–	–	–	166.67	**200.00**
	Including paddle shift for DSG gearbox. Only in conjunction with DSG gearbox	O[1]	O[1]	O[1]	O	–	–	–	–	166.67	**200.00**

1 Must be ordered in conjunction with Climate control 3Zone electronic air conditioning. 2 Some parts of leather interior will contain artificial leather.

● Standard equipment O Optional equipment – Not available. Factory-fitted options are subject to availability and extended delivery.

Volkswagen UK may change RRPs at any time (this includes where there are government changes in regulation and/or legislation).
There may be a delay to any RRP displaying correctly on our materials. Always obtain prices from your chosen authorised Volkswagen retailer.

VAT IS CALCULATED AT 20%. EFFECTIVE FROM 24 FEBRUARY 2020.

Factory-fitted options.

INTERIOR (CONTINUED)

		SE	SE Nav	SEL	R-Line	R-Line Edition (Estate only)	GTE	GTE Advance	Alltrack (Estate only)	Basic RRP £ Excluding VAT	Total RRP £ Including VAT
Upholstery – 'Vienna' leather[2]	Including heated front seats and heated windscreen washer jets	O	O	●	–	–	●	●	O	1,583.33	**1,900.00**
ergoComfort driver's seat with 14-way electric adjustment with driver's seat massage and memory function	Drivers' seat with electric adjustment for the seat backrest angle, seat height, seat length, seat cushion angle and lumbar adjustment. Including seat cushion depth adjustment and massage, memory and comfort entry/exit functions	O	O	O	O	–	–	–	–	829.17	**995.00**

1 Must be ordered in conjunction with Climate control 3Zone electronic air conditioning. 2 Some parts of leather interior will contain artificial leather.

IN-CAR ENTERTAINMENT AND COMMUNICATIONS

Discover Navigation touch-screen navigation/infotainment system with We Connect Plus services[1, 2]	8.0" colour touch-screen control system for navigation and radio functions. Preloaded European navigation data, 2D/3D map view, three calculated routes (Fast, Short, Eco), dynamic navigation based on TMC+, branded points of interest and Speed Limit Display[3]. 3-years We Connect Plus services access providing online access to a range of useful information such as traffic, fuel pricing, weather and news feeds. *Includes online navigation software updates, enabling you to download the latest map data. Please contact your authorised Volkswagen retailer for full details*	–	●	●	●	–	●	–	●	708.33	**850.00**
Discover Navigation Pro touch-screen navigation infotainment system with integrated voice activation, 'Gesture Control' and We Connect Plus services[2] **and Active Info Display**	Voice activated control system – responds to spoken voice commands for navigation and telephone functions. 9.2" colour touch-screen control system for navigation and radio functions. 64 GB SSD hard drive. Preloaded European navigation data, 3D map view, three calculated routes (Fast, Short, Eco), dynamic navigation based on TMC+, branded points of interest and Speed Limit Display[3]. 3-years We Connect Plus services access providing online access to a range of useful information such as traffic, fuel pricing, weather and news feeds. Includes online navigation software updates, enabling you to download the latest map data. Please contact your authorised Volkswagen retailer for full details										
	10.25" high resolution TFT dash display screen with customisable menus and information. *Not in conjunction with multifunction colour display*	–	–	O	O	●	O	●	O	1,833.33	**2,200.00**
'Dynaudio Confidence' soundpack	Including 16 channel digital amplifier, 700 watt output and 10 speakers plus subwoofer. *Includes tyre mobility kit in lieu of steel space saver spare wheel*	–	O[4]	O[5]	O[6]	–	–	–	O	958.33	**1,150.00**
	Including 10 channel digital amplifier, 700 watt output and 10 speakers	–	–	–	–	–	O	O	–	958.33	**1,150.00**

1 Not in conjunction with Discover Navigation Pro navigation/infotainment system. 2 We Connect Plus services are accessed via a compatible mobile device. Please see www.portal.volkswagen-we.com for more information. The use of We Connect Plus entails exchanging large volumes of data. As such, we strongly recommend that you sign-up for a flat rate data plan with your mobile network provider. After the initial 3-year We Connect Plus contract, an annual subscription is chargeable for the continuation of We Connect Plus services. 3 Speed Limit Display only reflects national speed limits and does not show temporary speed limit restrictions, or where permanent changes to speed limits are made in-between map updates. 4 Must be ordered in conjunction with Climate control 3Zone electronic air conditioning and Discover Navigation touch-screen navigation/infotainment system. 5 Must be ordered in conjunction with Climate control 3Zone electronic air conditioning. 6 Must be ordered in conjunction with full size alloy spare wheel, or Includes tyre mobility kit in lieu of steel space saver spare wheel.

SAFETY AND SECURITY

Tyre pressure monitoring system	Displays tyre pressure for each individual wheel in the multifunction display	O	O	O	O	O	O	O	O	120.83	**145.00**

● Standard equipment O Optional equipment – Not available. Factory-fitted options are subject to availability and extended delivery.

Volkswagen UK may change RRPs at any time (this includes where there are government changes in regulation and/or legislation).
There may be a delay to any RRP displaying correctly on our materials. Always obtain prices from your chosen authorised Volkswagen retailer.

VAT IS CALCULATED AT 20%. EFFECTIVE FROM 24 FEBRUARY 2020.

Factory-fitted options.

COMFORT AND CONVENIENCE

		SE	SE Nav	SEL	R-Line	R-Line Edition (Estate only)	GTE	GTE Advance	Alltrack (Estate only)	Basic RRP £ Excluding VAT	Total RRP £ Including VAT
Ambient lighting	Warning LED lights in front and rear doors	O	O	O	●	–	●	●	●	166.67	**200.00**
Ambient lighting Plus	LED strips in the front and rear doors, LED footwell and dashboard lighting with a choice of colour options, including two front reading lights and two rear reading lights	O	O	O	–	●	–	–	–	375.00	**450.00**
	LED strips in the front and rear doors, LED footwell and dashboard lighting with a choice of colour options, including two front reading lights and two rear reading lights	–	–	–	O	–	O	O	O	208.33	**250.00**
Climate control	3Zone electronic air conditioning with automatic air recirculation	O	O	O	●	●	●	●	●	541.67	**650.00**
Keyless entry and start/stop system	Allows the car to be locked, unlocked and started with a button if the sensor detects the key. Includes Start/Stop button on centre console	O	O	O	●	●	O	●	●	350.00	**420.00**
'Easy open' full electric tailgate/ boot including Keyless entry and start/stop system [1]	Electrically-operated tailgate opening and closing function, operated via foot movement under rear tailgate or from driver's door. Time delayed push button electrically closing tailgate. Electric luggage compartment lid (Estate only). Includes Keyless entry and start/stop system	O	O	O	●	●	O	●	●	500.00	**600.00**
Panoramic sunroof	Electric, glass sliding/tilting including integrated roller blind	O	O	O	O	–	O	O	O	829.17	**995.00**
Rubber boot mat		O	O	O	O	–	O	O	O	41.67	**50.00**

1 Not in conjunction with Keyless entry and start/stop system.

DRIVER'S ASSISTANCE

Area view	Front, rear and side cameras to provide 360° exterior view of vehicle displayed via vehicle's infotainment system. *Not in conjunction with rear-view camera*	–	O	O	O	●	O	O	O	666.67	**800.00**
Head-up Display	Driving information including current speed is projected onto a retractable screen within the driver's field of vision helping to reduce the time that the driver's eyes are averted from the road	–	–	O[1]	O	–	O	O	O	433.33	**520.00**
Park Assist	Sensor controlled steering aid to assist parallel or bay parking. Features manoeuvre braking function and optical parking display via vehicle's infotainment system. *Not in conjunction with Trailer Assist including Park Assist*	O	O	O	O	–	O	O	O	179.17	**215.00**
Rear-view camera	Displayed via the vehicle's infotainment system display. *Not in conjunction with Area View*	–	O	O	O	–	O	O	O	279.17	**335.00**
Trailer Assist including Park Assist [2]	Controls reverse guidance of vehicle and trailer. Optical display visualises actual and possible steering angles in the instrument cluster with reverse steering direction controlled via joystick (mirror adjustment switch) and Park Assist	O[3]	O[3]	O[3]	O[3]	–	O[3]	O[3]	O[3]	416.67	**500.00**
XDS electronic differential lock	Electronic system to improve traction and handling	O	O	O	O[4]	●	O	O	O	166.67	**200.00**

1 Must be ordered in conjunction with Climate control 3Zone electronic air conditioning. 2 Must be ordered in conjunction with towbar – swivelling. 3 Must be ordered in conjunction with Area view or Rear-view camera.
4 Standard on 2.0 ltr BiTDI SCR 4MOTION 240 PS engine.

● Standard equipment O Optional equipment – Not available. Factory-fitted options are subject to availability and extended delivery.

Volkswagen UK may change RRPs at any time (this includes where there are government changes in regulation and/or legislation).
There may be a delay to any RRP displaying correctly on our materials. Always obtain prices from your chosen authorised Volkswagen retailer.

VAT IS CALCULATED AT 20%. EFFECTIVE FROM 24 FEBRUARY 2020.

Accessories.

Make a statement and further enhance your Passat or Passat Estate by choosing from our wealth of stylish, innovative and sporty Volkswagen accessories. Choose from the high-quality carrier systems to the practical protection solutions and select the accessories to perfectly match your lifestyle.

04

05

01

02

01 Volkswagen roof box (Matt black)
Take the pressure off the boot when you next head away on holiday and pack all those essentials into one of these stylish Volkswagen roof boxes. In matt black, they not only fit a lot in, they look stylish too. 340 litres, maximum load capacity 50kg.
Part number: 000 071 200

02 Bicycle holder
Safely transport bicycles on the roof of your vehicle. The wheel rails are aerodynamically designed, and ensure the bicycle is correctly positioned. They enable you to use both hands to fix the wheels and frame. Thanks to the quick-fastening system, the bicycle holder is easy to fit onto the roof bars, without using any tools. The carrier also includes anti-theft protection. Suitable for maximum down tube widths of 80mm, bike weights of up to 20kg.
Part number: 000 071 128 F

03 Roof bars
Have a lot more fun when you arrive by throwing a lot more up top before you depart. These city crash-tested roof bars are essential when you want to fit a ski and snowboard holder, a bicycle holder, a useful roof box and more besides.
Two-piece set.
Part number: 3G0 071 126

03

04 Rear mudflaps
Prevent muck from messing up your vehicle's underbody, bumpers, sills and doors with Volkswagen mudflaps. They're long-lasting and durable, protecting your vehicle against excessive mud and reducing the chance of road chip damage.
Two-piece set.
Part number: 3G0 075 101 C

Front mudflaps
Two-piece set.
Part number: 3G0 075 111

05 Front rubber floor mats
When it comes to keeping out the worst, these rubber mats are the best. Durable, this set of two non-slip front mats protect from dirt and moisture. Shaped to fit, they're easy to clean and come with push button fastening.
Two-piece set.
Part number: 3G2 061 502 A82 V

Rear rubber floor mats
Two-piece set.
Part number: 3G0 061 512 82V

01

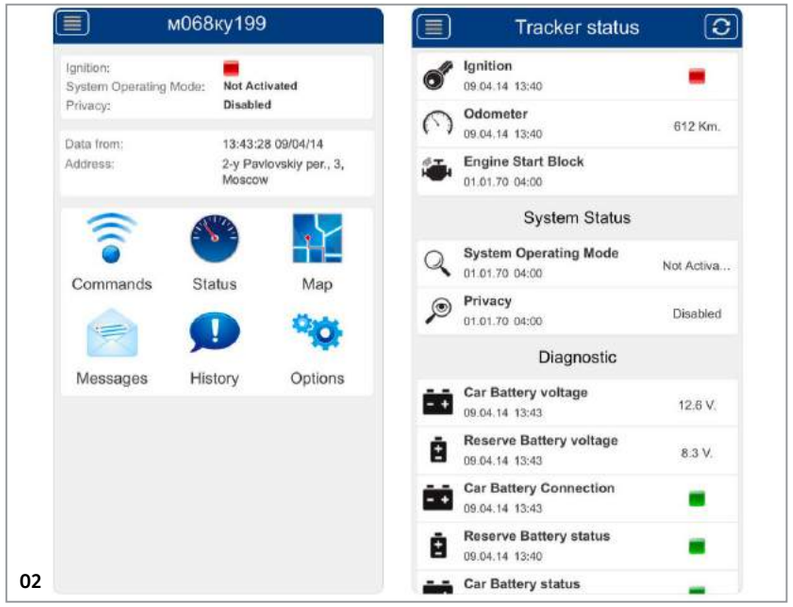

02

03

01 Compact III Bicycle Carrier
This clever carrier uses a super-simple quick release system to fit to your towing hitch, enabling you to transport three bicycles with a max weight of 54kg. It is the smallest, lightest and most compact in its class for the towing hitch and even with bicycles attached, accessing the boot is easy with the newly developed foot switch. Its anti-theft locking device makes life difficult for thieves and when you don't need it, it folds up into its carry bag – locking automatically – to neatly fit in your spare wheel well. Max. bicycle wheelbase 125cm.
Part number: 3C2 071 105 A

02 Meta Trak S5-VTS – GPS Tracker including 1 year subscription
Take control of exactly what's happening with your vehicle, wherever you are, with our easy-to-use app and relax knowing our Secure Operating Centre is monitoring your vehicle 24/7. System includes live tracking, 24/7 control room monitoring, driver recognition ID tags, instant alerts to your phone, low battery alert, track multiple vehicles with one login, journey history and score, geo-fencing, UK & Europe coverage, service and transport modes.

03 Detachable towbar including electrics
If you prefer to keep your options open, our detachable towbar has all the practicalities. It's got full integration into the vehicle's CAN-bus network and all electrical components including trailer stabilisation system support, switching to stand-by current and the adjustment of all the vehicle's assistance systems, whilst being removable and super-easy to re-fit when you need it.
Part number: 3G0 092 150 B

Fixed towbar
Part number: 3G0 092 103 B

Accessories. Your Volkswagen your way.
Passat Saloon.

	Part number	Total RRP £ Including VAT	Total fitted RRP £ Including VAT
PROTECTION AND CAR CARE			
Mudflaps – front	3G0 075 111	–	**72.00**
Mudflaps – rear	3G0 075 101 C	–	**72.00**
Rubber floor mats – front – black	3G2 061 502 A82 V	**60.00**	–
Rubber floor mats – rear – black	3G0 061 512 82V	**42.00**	–
Luggage compartment liner	3G5 061 160	**72.00**	–
TRAVEL AND TRANSPORT			
Volkswagen roof box – 340 litres – matt black	000 071 200	**235.00**	–
Roof bars	3G0 071 126	**265.00**	–
Bicycle holder	000 071 128 F	**108.00**	–
Surfboard holder	000 071 120 HA	**106.00**	–
Kayak holder	1K0 071 127 A	**112.00**	–
Ski and snowboard holder – 6 pairs of skis or 4 snowboards	000 071 129 N	**138.00**	–
Luggage net	3C5 065 110	**60.00**	–
STYLING AND TECHNOLOGY			
Pedal cap set – for automatic (DSG) gearboxes	5G2 064 205	–	**185.00**
Door sill trims – aluminium (2 pieces)	3G0 071 303	–	**126.00**
Dynamic centre caps (self-levelling)	000 071 213 C	–	**158.50**

	Part number	Total RRP £ Including VAT	Total fitted RRP £ Including VAT
Semi-rigid loadliner	3G5 061 161	**114.00**	–
Rear bumper protection film – transparent	3G5 061 197	–	**106.00**
Door sill trims – black/silver	3G0 071 310 BXF	–	**139.00**
Summer car care kit	000 096 355 D	**26.50**	–
Winter car care kit	000 096 352 L	**21.50**	–
Volkswagen child seat G1 ISOFIX DUO Plus	5H0 019 909	**340.00**	–
Waste bag	000 061 107	**23.50**	–
Towbar – detachable, including electrical installation kit	3G0 092 150 B	–	**759.00**
Compact III towbar mounted bicycle carrier	3C2 071 105 A	**577.00**	–
Clothes hanger	00V 061 127	**29.30**	–
Safety kit	000 093 059	**25.00**	–
Plug & Play sound system	000 051 419	–	**559.00**
Meta Trak S5-VTS – GPS Tracker including 1 year subscription	ZGB 000 054 003	–	**499.00**
Kenwood Navigation system for Composition Media with integrated Dash Cam	ZGB 5G0 051 MBD R	–	**785.00**

Accessory prices are the manufacturer's Recommended Retail Prices (RRP), shown exclusive and inclusive of fitting where applicable, inclusive of appropriate VAT, and are charged in addition to recommended 'On the road' retail price paid for the vehicle. For full details, please contact your authorised Volkswagen retailer.

Volkswagen UK may change RRPs at any time (this includes where there are government changes in regulation and/or legislation). There may be a delay to any RRP displaying correctly on our materials. Always obtain prices from your chosen authorised Volkswagen retailer.

VAT IS CALCULATED AT 20%,
EXCEPT RETAILER SUPPLIED CHILD SAFETY SEATS WHERE IT IS CALCULATED AT 5%.
EFFECTIVE FROM 24 FEBRUARY 2020.

Accessories. Your Volkswagen your way.
Passat Estate.

	Part number	Total RRP £ Including VAT	Total fitted RRP £ Including VAT
PROTECTION AND CAR CARE			
Mudflaps – front	3G0 075 111	–	**72.00**
Mudflaps – rear	3G0 075 101 C	–	**72.00**
Rubber floor mats – front – black	3G2 061 502 A82 V	**60.00**	–
Rubber floor mats – rear – black	3G0 061 512 82V	**42.00**	–
Luggage compartment liner	3G9 061 160	**72.00**	–
Reversible boot mat	3G9 061 210	**168.00**	–
TRAVEL AND TRANSPORT			
Volkswagen roof box – 340 litres – matt black	000 071 200	**235.00**	–
Load bars	3G9 071 151	**235.00**	–
Bicycle holder	000 071 128 F	**108.00**	–
Surfboard holder	000 071 120 HA	**106.00**	–
Kayak holder	1K0 071 127 A	**112.00**	–
Ski and snowboard holder – 6 pairs of skis or 4 snowboards	000 071 129 N	**138.00**	–
STYLING AND TECHNOLOGY			
Dynamic centre caps (self-levelling)	000 071 213 C	–	**158.50**
Door sill trims – steel	3G0 071 303	–	**126.00**
Rear chrome strip	3G9 071 360 A	–	**109.00**

	Part number	Total RRP £ Including VAT	Total fitted RRP £ Including VAT
Bumper protector – stainless steel look	3G9 061 195	–	**125.00**
Rear bumper protection film – transparent	3G9 061 197 B	–	**107.00**
Door sill trims – black/silver	3G0 071 310 BXF	–	**139.00**
Summer car care kit	000 096 355 D	**26.50**	–
Winter car care kit	000 096 352 L	**21.50**	–
Volkswagen child seat G1 ISOFIX DUO Plus	5H0 019 909	**340.00**	–
Luggage net	3C5 065 110	**60.00**	–
Safety kit	000 093 059	**25.00**	–
Towbar – detachable, including electrical installation kit	3G0 092 150 B	–	**759.00**
Compact III towbar mounted bicycle carrier	3C2 071 105 A	**577.00**	–
Clothes hanger	00V 061 127	**29.30**	–
Partition grille (dog guard)	3G9 017 221	**316.40**	**374.00**
Plug & Play sound system	000 051 419	–	**559.00**
Meta Trak S5-VTS – GPS Tracker including 1 year subscription	ZGB 000 054 003	–	**499.00**
Kenwood Navigation system for Composition Media with integrated Dash Cam	ZGB 5G0 051 MBD R	–	**785.00**

Accessory prices are the manufacturer's Recommended Retail Prices (RRP), shown exclusive and inclusive of fitting where applicable, inclusive of appropriate VAT, and are charged in addition to recommended 'On the road' retail price paid for the vehicle. For full details, please contact your authorised Volkswagen retailer.

Volkswagen UK may change RRPs at any time (this includes where there are government changes in regulation and/or legislation). There may be a delay to any RRP displaying correctly on our materials. Always obtain prices from your chosen authorised Volkswagen retailer.

VAT IS CALCULATED AT 20%,
EXCEPT RETAILER SUPPLIED CHILD SAFETY SEATS WHERE IT IS CALCULATED AT 5%.
EFFECTIVE FROM 24 FEBRUARY 2020.

Alloy wheels – Standard.

SE

SEL GTE

RL GTE A

RL E

AT

01 'Istanbul' 7J x 17" alloy wheels with 215/55 R17 low rolling resistance tyres and anti-theft wheel bolts.

02 'Nevilles' Black 7J x 17" alloy wheels with 215/55 R17 low rolling resistance tyres and anti-theft wheel bolts.

03 'Monterrey' Grey Metallic 8J x 18" alloy wheels with 235/45 R18 self-sealing tyres and anti-theft wheel bolts.

04 'Pretoria' Dark Graphite 8J x 19" alloy wheels with 235/40 R19 self-sealing tyres and anti-theft wheel bolts.

05 'Kalamata' 7J x 18" alloy wheels with 245/45 R18 self-sealing tyres and anti-theft wheel bolts.

■ Standard □ Optional

SE | SE/SE Nav **SEL** | SEL **RL** | R-Line **RL E** | R-Line Edition **GTE** | GTE **GTE A** | GTE Advance **AT** | Alltrack

Images shown feature optional metallic paint.

Alloy wheels – Optional.

SE SEL

SE SEL

SE SEL

SE SEL

SE SEL GTE GTE A

SE SEL GTE GTE A

RL GTE A

RL

RL

AT

01 'London' 7J x 17" alloy wheels with 215/55 R17 low rolling resistance tyres and anti-theft wheel bolts.

02 'Soho' Anthracite 7J x 17" alloy wheels with 215/55 R17 low rolling resistance tyres and anti-theft wheel bolts.

03 'Sebring' 7J x 17" alloy wheels with 215/55 R17 low rolling resistance tyres and anti-theft wheel bolts.

04 'Oxford' Grey Metallic 8J x 18" alloy wheels with 235/45 R18 low rolling resistance tyres and anti-theft wheel bolts.

05 'Oxford' 8J x 18" alloy wheels with 235/45 R18 low rolling resistance tyres and anti-theft wheel bolts.

06 'Liverpool' 8J x 18" alloy wheels with 235/45 R18 low rolling resistance tyres and anti-theft wheel bolts.

07 'Wolverton' Black diamond-turned 8J x 18" alloy wheels with 235/45 R18 tyres and anti-theft wheel bolts.

08 'Verona' Sterling Silver 8J x 19" alloy wheels with 235/40 R19 tyres and anti-theft wheel bolts.

09 'Pretoria' Dark Graphite 8J x 19" alloy wheels with 235/40 R19 tyres and anti-theft wheel bolts.

10 'Albertville' 8J x 19" alloy wheels with 245/40 R19 tyres and anti-theft wheel bolts.

■ Standard □ Optional

SE | SE/SE Nav **SEL** | SEL **RL** | R-Line **GTE** | GTE **GTE A** | GTE Advance **AT** | Alltrack

Please note, choosing larger alloy wheels than standard, as an option, may result in increased fuel consumption. This is due to the fact that larger wheels have both more aerodynamic drag and more mechanical drag, resulting in increased rolling resistance and increased wind resistance. Images shown feature optional metallic paint.

Paint.

SE SEL RL GTE AT

SE SEL RL GTE AT

SE SEL RL GTE AT

RLE

SE SEL RL GTE AT

SE SEL RL GTE AT

SE SEL RL GTE AT

AT

SE SEL RL GTE AT

RL

SE SEL RL AT

SE SEL RL GTE AT

SE SEL RL GTE AT

01 Pure White Non-Metallic 0Q

02 Urano Grey Non-Metallic 5K

03 Tornado Red Non-Metallic G2

04 Moonstone Grey Non-Metallic Signature C2

05 Tamarind Brown Metallic 3V

06 Manganese Grey Metallic 5V

07 Reflex Silver Metallic 8E

08 Bottle Green Metallic 8V

09 Pyrite Silver Metallic K2

10 Lapiz Blue Metallic Signature L9

11 Aquamarine Blue Ultra Metallic 8H

12 Deep Black Pearl Effect 2T

13 Oryx White Premium Signature 0R

Standard Optional

SE | SE/SE Nav **SEL** | SEL **RL** | R-Line **RLE** | R-Line Edition **GTE** | GTE/GTE Advance **AT** | Alltrack

Models shown are Passat Estate SEL with optional Park Assist and 'IQ. Light' LED matrix headlights.
Image 08 is Passat Alltrack with optional 19" 'Albertville' alloy wheels.

Please note: Colour range is reproduced for illustration purposes only. Actual on-car colours may vary from those shown, as screen technology does allow exact reproduction of the paint colours.

Upholstery.

SE

SEL GTE

SEL GTE

RL

RL

AT

SE

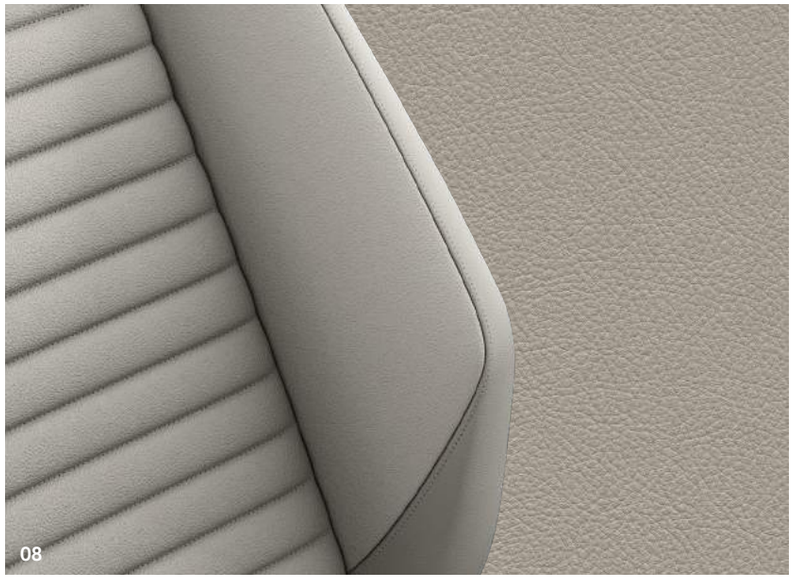

SE

Standard on SE and SE Nav
01 'Django' cloth Titan Black (TO)

Standard on SEL, GTE and GTE Advance
02 'Vienna' leather† Titan Black (TO)
03 'Vienna' leather† Mistral Grey (YR)‡

Standard on R-Line and R-Line Edition
04 'Nappa' leather† **and 'Carbon Optic'** Titan Black/Titan Black (TO)
05 'Nappa' leather† **and 'Carbon Optic'** Black/Flint Grey (YR)

Standard on Alltrack
06 'Summit' cloth Titan Black (TO)

Optional on SE, SE Nav and Alltrack
07 'Vienna' leather† Titan Black (TO)
08 'Vienna' leather† Mistral Grey (YR)

Standard Optional
SE | SE/SE Nav **SEL** | SEL **RL** | R-Line/R-Line Edition **GTE** | GTE/GTE Advance **AT** | Alltrack

† Some parts of leather interior will contain artificial leather.
‡ Must be ordered in conjunction with Climate control 3Zone electronic air conditioning.

Please note: Swatches reproduced for illustration purposes only. Actual upholstery colours may vary from those shown, as screen technology does not allow exact reproduction of the upholstery colours.

Decorative inserts.

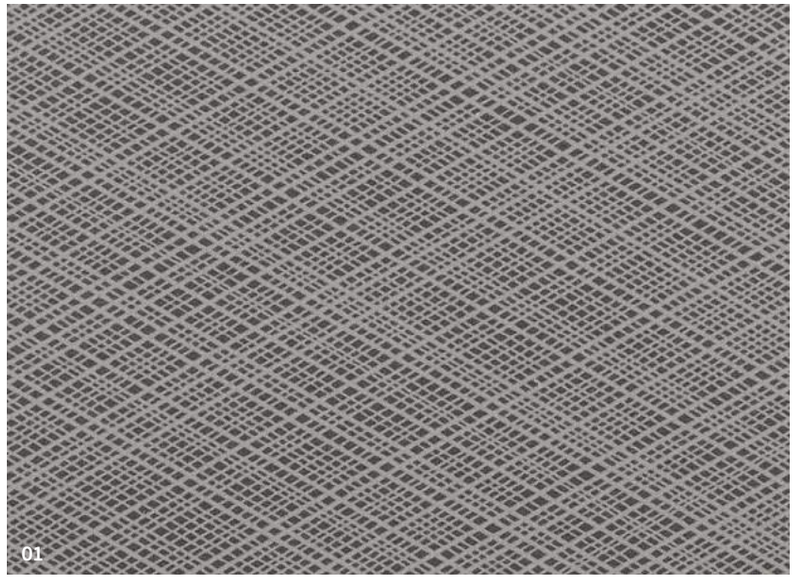

SE SEL GTE

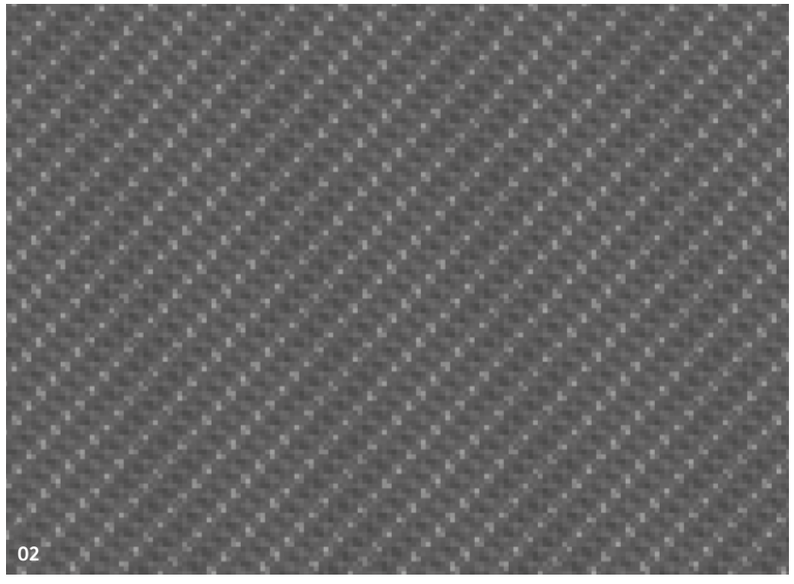

RL

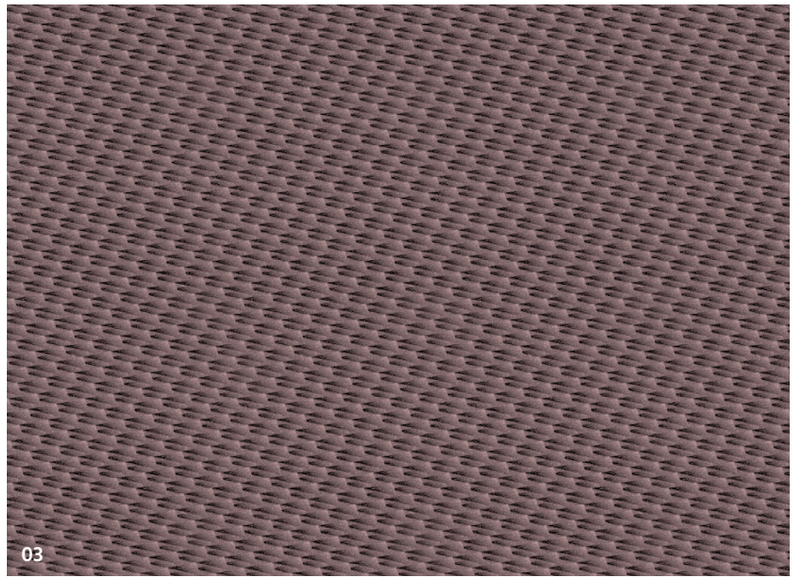

AT

Standard on SE, SE Nav, SEL, GTE and GTE Advance
01 'Cross Hatch'

Standard on R-Line and R-Line Edition
02 'Dark Diamond Flag'

Standard on Alltrack
03 'Tracks'

■ Standard □ Optional
SE | SE/SE Nav **SEL** | SEL **RL** | R-Line/R-Line Edition **GTE** | GTE/GTE Advance **AT** | Alltrack

Please note: Decorative inserts reproduced for illustration purposes only. Actual decorative insert colours may vary from those shown, as screen technology does not allow exact reproduction of the decorative insert colours.

Combinations.

	Carpet	Dashboard Upper/lower	Rooflining	Pure White 0Q Non-Metallic*	Urano Grey 5K Non-Metallic	Tornado Red G2 Non-Metallic*	Moonstone Grey C2 Non-Metallic Signature	Tamarind Brown 3V Metallic*	Manganese Grey 5V Metallic*	Reflex Silver 8E Metallic*	Bottle Green 8V Metallic*	Pyrite Silver K2 Metallic*	Lapiz Blue L9 Metallic Signature*	Aquamarine Blue 8H Ultra Metallic*	Deep Black 2T Pearl Effect*	Oryx White OR Premium Signature*
'Django' cloth																
Standard on SE and SE Nav																
Titan Black (TO)	Titan Black	Titan Black/Titan Black	Mistral Grey	●	●	●	–	●	●	●	–	●	–	●	●	●
'Vienna' leather †																
Standard on SEL																
Titan Black (TO)	Titan Black	Titan Black/Titan Black	Mistral Grey	●	●	●	–	●	●	●	–	●	–	●	●	●
Mistral Grey (YR) ‡	Raven Grey	Raven Grey/Mistral Grey	Mistral Grey	●	●	●	–	●	●	●	–	●	–	●	●	●
'Nappa' leather † and 'Carbon Optic'																
Standard on R-Line																
Titan Black/Titan Black (OH)	Titan Black	Titan Black	Titan Black	●	●	●	–	●	●	●	–	●	●	●	●	●
Flint Grey/Black (OK)	Titan Black	Titan Black	Titan Black	●	●	●	–	●	●	●	–	●	●	●	●	●
'Nappa' leather † and 'Carbon Optic'																
Standard on R-Line Edition																
Titan Black/Titan Black (OH)	Titan Black	Titan Black	Titan Black	–	–	–	●	–	–	–	–	–	–	–	–	–
Flint Grey/Black (OK)	Titan Black	Titan Black	Titan Black	–	–	–	●	–	–	–	–	–	–	–	–	–
'Vienna' leather †																
Standard on GTE and GTE Advance																
Titan Black (TO)	Titan Black	Titan Black/Titan Black	Mistral Grey	●	●	●	–	●	●	●	–	●	–	–	●	●
Mistral Grey (YR)	Raven Grey	Raven Grey/Mistral Grey	Mistral Grey	●	●	●	–	●	●	●	–	●	–	–	●	●
'Summit' cloth																
Standard on Alltrack																
Titan Black (TO)	Titan Black	Titan Black/Titan Black	Mistral Grey	●	●	●	–	●	●	●	●	●	–	●	●	●
'Vienna' leather †																
Optional on SE and SE Nav																
Titan Black (TO)	Titan Black	Titan Black/Titan Black	Mistral Grey	○	○	○	–	○	○	○	–	○	–	○	○	○
Mistral Grey (YR)	Raven Grey	Raven Grey/Mistral Grey	Mistral Grey	○	○	○	–	○	○	○	–	○	–	○	○	○
'Vienna' leather †																
Optional on Alltrack																
Titan Black (TO)	Titan Black	Titan Black/Titan Black	Mistral Grey	○	○	○	–	○	○	○	○	○	–	○	○	○
Mistral Grey (YR)	Raven Grey	Raven Grey/Mistral Grey	Mistral Grey	○	○	○	–	○	○	○	○	○	–	○	○	○

* Optional at extra cost. † Some parts of leather interior will contain artificial leather. ‡ Must be ordered in conjunction with Climate control 3Zone electronic air conditioning. ● Standard. ○ Optional. – Not available.

Dimensions – Passat Saloon.

Exterior dimensions	SE, SE Nav, SEL, R-Line
Length – min./max., mm	4775/4873
Width – inc. door mirrors, mm	2083
Height – max., mm	1483
Height – opened tailgate/floor, mm	1747
Wheelbase, mm	2786
Turning circle, m	11.7

Interior dimensions	
Effective headroom – front, mm	1034
Effective headroom – rear, mm	964
Interior width – front, mm	1506
Interior width – rear, mm	1506

Maximum luggage capacity, litres VDA measuring method using 200 x 100 x 50mm blocks	
With rear seats upright and rear bench forward	586
With rear seats folded and rear bench forward	1152

Figures shown are for standard specification models. The addition of certain factory-fitted options and/or accessories may affect some of the dimensions shown.

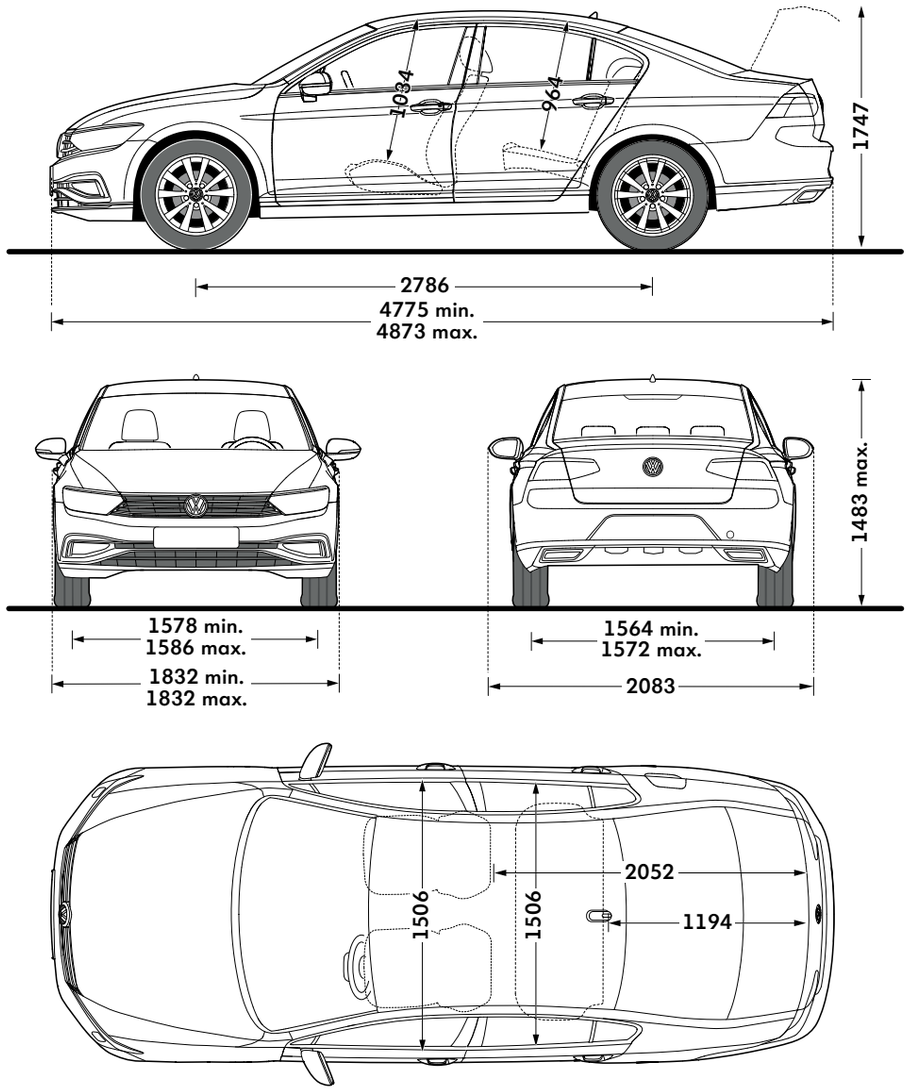

On illustrations, where arrows and figures are shown inside of the vehicle, the measurements are for interior dimensions. Where arrows and figures are shown outside of the vehicle, the measurements are for exterior dimensions.

Please note: illustrations shown may not necessarily reflect UK specification.

Dimensions – Passat Estate.

Exterior dimensions	SE, SE Nav, SEL, R-Line, R-Line Edition
Length – min./max., mm	4773/4889
Width – inc. door mirrors, mm	2083
Height – max., mm	1516
Height – opened tailgate/floor, mm	2048
Wheelbase, mm	2786
Turning circle, m	11.7

Interior dimensions	
Effective headroom – front, mm	1031
Effective headroom – rear, mm	1007
Interior width – front, mm	1506
Interior width – rear, mm	1506

Maximum luggage capacity, litres VDA measuring method using 200 x 100 x 50mm blocks	
With rear seats upright and rear bench forward	650
With rear seats folded and rear bench forward	1780

Figures shown are for standard specification models. The addition of certain factory-fitted options and/or accessories may affect some of the dimensions shown.

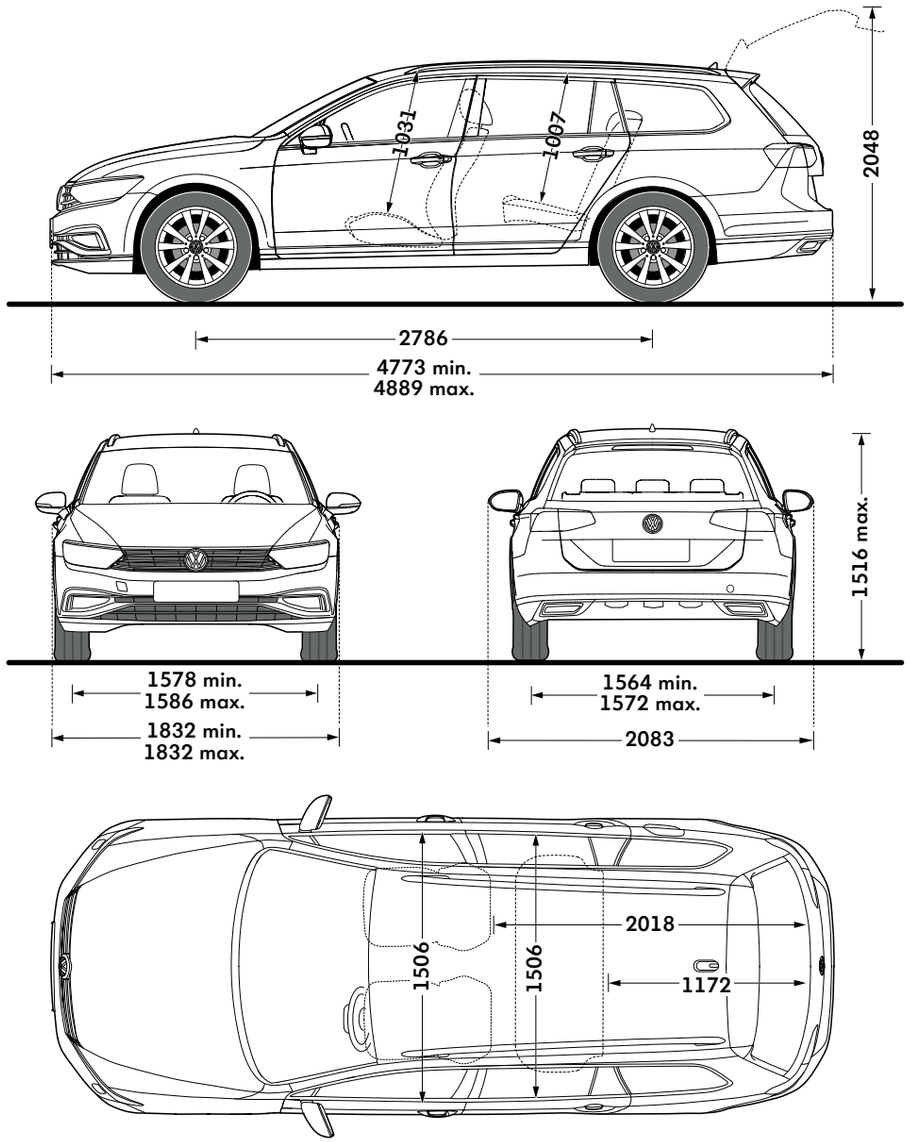

On illustrations, where arrows and figures are shown inside of the vehicle, the measurements are for interior dimensions. Where arrows and figures are shown outside of the vehicle, the measurements are for exterior dimensions.

Please note: illustrations shown may not necessarily reflect UK specification.

Dimensions – Passat Alltrack.

Exterior dimensions	Passat Alltrack
Length – min./max., mm	4780/4888
Width – inc. door mirrors, mm	2083
Height – max., mm	1527
Height – opened tailgate/floor, mm	2072
Wheelbase, mm	2788
Turning circle, m	11.7

Interior dimensions	
Effective headroom – front, mm	1031
Effective headroom – rear, mm	1007
Interior width – front, mm	1506
Interior width – rear, mm	1506

Maximum luggage capacity, litres VDA measuring method using 200 x 100 x 50mm blocks	
With rear seats upright and rear bench forward	639
With rear seats folded and rear bench forward	1769

Figures shown are for standard specification models. The addition of certain factory-fitted options and/or accessories may affect some of the dimensions shown.

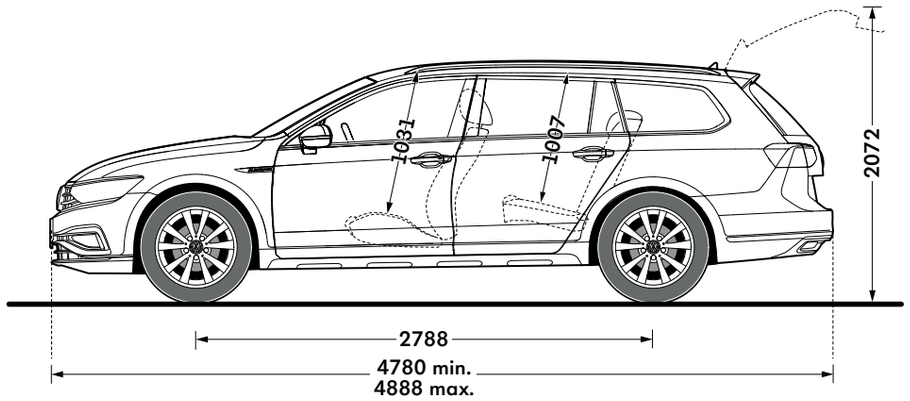

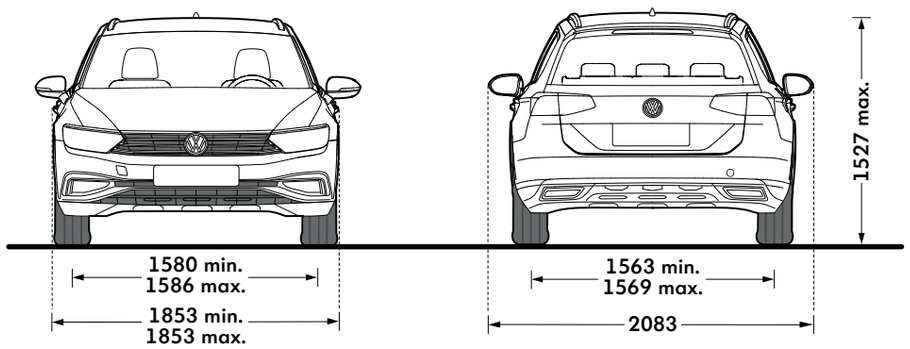

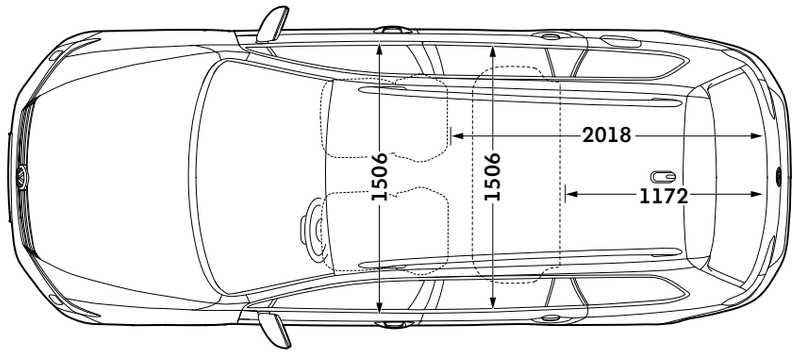

On illustrations, where arrows and figures are shown inside of the vehicle, the measurements are for interior dimensions. Where arrows and figures are shown outside of the vehicle, the measurements are for exterior dimensions.

Please note: illustrations shown may not necessarily reflect UK specification.

AdBlue®.

Your Volkswagen car is fitted with an advanced emissions control system, which helps your vehicle meet EURO 6 exhaust gas regulations.

How does the system work?

AdBlue®, a water/urea based additive, is stored in a tank (like diesel fuel), however, unlike fuel it is not injected into the engine, but directly into a specially modified part of the vehicle's exhaust. This begins a chemical reaction which removes the polluting oxides of nitrogen (NOx), converting them into harmless oxygen and nitrogen in a process known as Selective Catalytic Reduction, or SCR for short. SCR is only applicable to diesel engines and the more economically you drive, typically, the less AdBlue® you will use.

The size of the AdBlue® tank fitted to your car will vary depending on which Volkswagen model you have, therefore the interval between top-ups will vary. In addition, many factors such as mileage, journey type, driving style and environmental conditions can influence how much AdBlue® is consumed. A passenger car can consume approximately 1.5 litres of AdBlue® every 620 miles (1.0–1.5 litres for the Passat and Passat Estate). The chart below details the AdBlue® tank size and location.

Model (SCR derivatives only)	Tank size (Approximately)	AdBlue® tank filler location	Initial warning of low AdBlue® (2,400km/1,500 miles to go) can be expected to occur at:
Passat and Passat Estate	13 litres	Next to fuel filler nozzle	4,000 to 6,500 miles or sooner*

* Distances are approximate and the warning light may come on sooner depending on driving style, journey type, engine and vehicle load and environmental conditions.

How will I know if the system needs topping-up?

A series of warnings will be given via the driver information system, accompanied by advice/messages.

The first message is displayed when the remaining range is approximately 1,500 miles, and is repeated every 62 miles until the range reaches 1,000 miles, at which point the warning turns amber. This warning is repeated every 31 miles and is accompanied by an audible tone. If these warnings are not acted upon, the warning turns red; once this happens the car will not restart once the ignition is turned off. This is not a fault, but a required feature of the system. If this stage is reached the system will need a full top-up before the car can be restarted. Further information is available in the vehicle handbook.

Why should I use a Volkswagen Authorised repairer for top-ups?

- AdBlue® top-ups at authorised repairers are extremely competitive and charged by the litre, so you only pay for what you need
- Authorised repairer staff are trained to handle AdBlue®
- AdBlue® tanks need special adaptors on fillers to ensure there are no spillages
- Volkswagen do not recommend keeping top-up bottles in cars

The top-up bottles supplied by Volkswagen have a capacity of 1.89 litres, and come complete with the adaptor nozzles that fit the Volkswagen AdBlue® tank. These are available from all Volkswagen Authorised repairers.

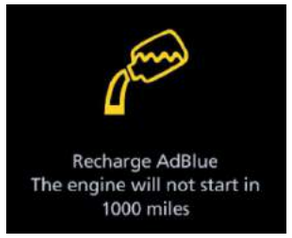

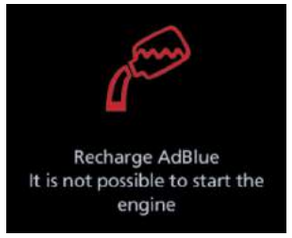

AdBlue® warning lights.

Important information

- AdBlue® is not a fuel additive. This is why there is a separate AdBlue® tank
- If you put AdBlue® in your fuel tank by mistake, please do not start the engine, but contact a retailer for help
- Put only AdBlue® in the AdBlue® tank; do not fill the AdBlue® tank with any other liquids
- Prevent anything from contaminating AdBlue®
- If small quantities of AdBlue® come into contact with the vehicle's paintwork, for example, wipe them off and if necessary rinse the area with water

EFFECTIVE FROM 24 FEBRUARY 2020.

VED and additional 'On the road' costs.

Diesel vehicles that do not meet the RDE2 standard will be charged a supplement on their 'First year rate' to the effect of moving up by one VED (Vehicle Excise Duty) band. The following tables give the rates of vehicle tax on cars registered on or after 1 April 2019. Please refer to the Model Prices pages to confirm which models are RDE2 compliant.

'FIRST YEAR RATE' VED – CARS REGISTERED ON OR AFTER 1.4.2019 BASED ON CO_2 EMISSIONS AND FUEL TYPE

Petrol/Diesel† – 'First year rate' VED

CO_2 emissions (g/km)	Petrol/Diesel† VED £	Petrol total 'On the road' costs £
0	**0.00**	**690.00**
1-50	**10.00**	**700.00**
51-75	**25.00**	**715.00**
76-90	**110.00**	**800.00**
91-100	**130.00**	**820.00**
101-110	**150.00**	**840.00**
111-130	**170.00**	**860.00**
131-150	**210.00**	**900.00**
151-170	**530.00**	**1,220.00**
171-190	**855.00**	**1,545.00**
191-225	**1,280.00**	**1,970.00**
226-255	**1,815.00**	**2,505.00**
Over 255	**2,135.00**	**2,825.00**

Diesel‡ – 'First year rate' VED

CO_2 emissions (g/km)	Diesel‡ VED £	Diesel total 'On the road' costs £
0	**0.00**	**690.00**
1-50	**25.00**	**715.00**
51-75	**110.00**	**800.00**
76-90	**130.00**	**820.00**
91-100	**150.00**	**840.00**
101-110	**170.00**	**860.00**
111-130	**210.00**	**900.00**
131-150	**530.00**	**1,220.00**
151-170	**855.00**	**1,545.00**
171-190	**1,280.00**	**1,970.00**
191-225	**1,815.00**	**2,505.00**
226-255	**2,135.00**	**2,825.00**
Over 255	**2,135.00**	**2,825.00**

Alternative fuel – 'First year rate' VED

CO_2 emissions (g/km)	Alternative fuel VED £	Alternative fuel total 'On the road' costs £
0	**0.00**	**690.00**
1-50	**0.00**	**690.00**
51-75	**15.00**	**705.00**
76-90	**100.00**	**790.00**
91-100	**120.00**	**810.00**
101-110	**140.00**	**830.00**
111-130	**160.00**	**850.00**
131-150	**200.00**	**890.00**
151-170	**520.00**	**1,210.00**
171-190	**845.00**	**1,535.00**
191-225	**1,270.00**	**1,960.00**
226-255	**1,805.00**	**2,495.00**
Over 255	**2,125.00**	**2,815.00**

† Diesel cars that are tested to RDE2 standards. ‡ Diesel cars, including those tested to RDE standards.

The way VED (Vehicle Excise Duty) vehicle tax is calculated will change for vehicles that are first registered with the DVLA on, or after, 1 April 2018. All new diesel vehicles registered after 1 April 2018 that do not meet the RDE2 standard will be charged a supplement on their 'First year rate' to the effect of moving up by one VED (Vehicle Excise Duty) band.

If a new vehicle is registered on or after 1 April 2018, after the 'First year rate' VED the majority of vehicles move to the 'Standard rate' of vehicle tax which is £145 a year.

The 'First year rate' will be based on the CO2 emissions, fuel type and the list price of the vehicle supplied by the Manufacturer or Retailer as applicable on the day before the vehicle is first registered and taxed.

After the 'First year rate', all vehicles with zero emissions will be exempt from the 'Standard rate' of vehicle tax. All petrol and diesel vehicles will pay a standard rate of £145 a year, and alternative fuel vehicles will pay a standard rate of £135 a year.

Petrol or diesel vehicles with a list price over £40,000 at first registration will pay £465 a year, after the first 'First year rate' vehicle tax, for a period of five years. This comprises the £145 'Standard rate' and £320 additional rate. After five years the vehicle tax will revert to the 'Standard rate' of £145 per year.

Alternative fuel vehicles – hybrids, bi-ethanol or LPG, with a list price over £40,000 at first registration will pay £455 a year after the 'First year rate' vehicle tax for a period of five years. This comprises the £135 'Standard rate' and £320 additional rate which reverts to £135 'Standard rate' after five years.

Vehicles with a list price exceeding £40,000 with zero emissions (including electric) will pay the additional rate of £320 a year for a further five year period, after the 'First year rate' tax. After the five year period these vehicles will pay zero VED tax.

There is no provision for 6 month's 'First year rate' VED.

'STANDARD RATE' VED

'Standard rate' VED based on fuel type

Fuel type	CO_2 emissions (g/km)	'Standard rate' 12 months VED £
Electric/Other	0	**0.00**
Petrol/Diesel	1 - Over 255	**145.00**
Alternative	1 - Over 255	**135.00**

After the 'First year rate', all vehicles with zero emissions will be exempt from the 'Standard rate' of vehicle tax. All petrol and diesel vehicles will pay a standard rate of £145 a year, and alternative fuel vehicles will pay a standard rate of £135 a year.

'STANDARD RATE' – OVER £40,000 RRP

'Standard rate' VED for vehicles over £40,000 list price – five year annual rate

Fuel type	'Standard rate' 12 months VED £	Additional rate £	Total annual payment £
Electric	**0.00**	**320.00**	**320.00**
Petrol/Diesel	**145.00**	**320.00**	**465.00**
Alternative	**135.00**	**320.00**	**455.00**

Petrol or diesel vehicles with a list price over £40,000 at first registration pay £465 a year after the 'First year rate' for a period of five years. Alternative fuel vehicles over £40,000 at first registration – hybrids, bi-ethanol or LPG, pay £455 a year after the 'First year rate' for a period of five years. Electric or vehicles producing zero emissions over £40,000 at first registration pay £320 a year after the 'First year rate' for a period of five years. After five years, vehicles will revert to their 'Standard rate' tax depending on fuel type.

ADDITIONAL 'OTR' COSTS

Additional 'On the road' costs

Delivery to retailer	**509.17**
Number plates	**20.00**
VAT	**105.83**
Vehicle first registration fee	**55.00**
Total	**690.00**

The total 'On the road' costs above for petrol, diesel, electric and alternative fuel vehicles include the applicable 'First year rate' VED charge plus the 'On the road' costs as detailed above:

VAT IS CALCULATED AT 20%. EFFECTIVE FROM 24 FEBRUARY 2020.

Environmental information – Passat.

4-DOOR SALOON RANGE.		RDE2 Compliant	Fuel	Transmission	Output, PS	CO_2 emission, g/km[1], Min.		CO_2 emission, g/km[1], Max.	Combined[1] fuel consumption mpg, Min.		Combined[1] fuel consumption mpg, Max.	Combined[1] fuel consumption ltr/100km, Min.		Combined[1] fuel consumption ltr/100km, Max.
SE‡	1.5 ltr TSI EVO‡	No	Petrol	6-spd manual	150	117	–	119	44.1	–	47.1	6.4	–	6.0
	1.5 ltr TSI EVO‡	No	Petrol	7-spd auto DSG	150	117	–	119	41.5	–	44.8	6.8	–	6.3
	1.6 ltr TDI‡	No	Diesel	7-spd auto DSG	120	105	–	107	47.1	–	51.4	6.0	–	5.5
	2.0 ltr TDI EVO SCR‡	No	Diesel	6-spd manual	150	101	–	104	55.4	–	60.1	5.1	–	4.7
	2.0 ltr TDI EVO SCR‡	No	Diesel	7-spd auto DSG	150	102	–	104	53.3	–	56.5	5.3	–	5.0
SE NAV‡	1.5 ltr TSI EVO‡	No	Petrol	6-spd manual	150	117	–	119	44.1	–	47.1	6.4	–	6.0
	1.5 ltr TSI EVO‡	No	Petrol	7-spd auto DSG	150	117	–	119	41.5	–	44.8	6.8	–	6.3
	1.6 ltr TDI‡	No	Diesel	7-spd auto DSG	120	105	–	107	47.1	–	51.4	6.0	–	5.5
	2.0 ltr TDI EVO SCR‡	No	Diesel	6-spd manual	150	101	–	104	55.4	–	60.1	5.1	–	4.7
	2.0 ltr TDI EVO SCR‡	No	Diesel	7-spd auto DSG	150	102	–	104	53.3	–	56.5	5.3	–	5.0
SEL‡	1.5 ltr TSI EVO‡	No	Petrol	6-spd manual	150	117	–	119	44.1	–	47.1	6.4	–	6.0
	1.5 ltr TSI EVO‡	No	Petrol	7-spd auto DSG	150	117	–	119	41.5	–	44.8	6.8	–	6.3
	2.0 ltr TSI‡	No	Petrol	7-spd auto DSG	190	140	–	143	36.2	–	37.2	7.8	–	7.6
	1.6 ltr TDI‡	No	Diesel	7-spd auto DSG	120	105	–	107	47.1	–	51.4	6.0	–	5.5
	2.0 ltr TDI EVO SCR‡	No	Diesel	6-spd manual	150	101	–	104	55.4	–	60.1	5.1	–	4.7
	2.0 ltr TDI EVO SCR‡	No	Diesel	7-spd auto DSG	150	102	–	104	53.3	–	56.5	5.3	–	5.0
	2.0 ltr TDI SCR‡	No	Diesel	7-spd auto DSG	190	116	–	118	47.9	–	49.6	5.9	–	5.7
R-LINE‡	1.5 ltr TSI EVO‡	No	Petrol	6-spd manual	150	119	–	121	43.5	–	46.3	6.5	–	6.1
	1.5 ltr TSI EVO‡	No	Petrol	7-spd auto DSG	150	119	–	121	40.9	–	43.5	6.9	–	6.5
	2.0 ltr TSI‡	No	Petrol	7-spd auto DSG	190	140	–	143	35.8	–	37.7	7.9	–	7.5
	2.0 ltr TDI EVO SCR‡	No	Diesel	6-spd manual	150	104	–	105	55.4	–	58.9	5.1	–	4.8
	2.0 ltr TDI EVO SCR‡	No	Diesel	7-spd auto DSG	150	104	–	106	53.3	–	55.4	5.3	–	5.1
	2.0 ltr TDI SCR‡	No	Diesel	7-spd auto DSG	190	116	–	118	47.9	–	50.4	5.9	–	5.6
	2.0 ltr TDI SCR 4MOTION‡	No	Diesel	7-spd auto DSG	190	126	–	129	44.1	–	47.1	6.4	–	6.0
	2.0 ltr BiTDI SCR 4MOTION‡	No	Diesel	7-spd auto DSG	240	148	–	151	37.7	–	39.8	7.5	–	7.1

1 Figures shown are for comparability purposes; only compare fuel consumption and CO_2 figures with other vehicles tested to the same technical procedures. These figures may not reflect real life driving results, which will depend upon a number of factors including the accessories fitted (post-registration), variations in weather, driving styles and vehicle load. There is a new test used for fuel consumption and CO_2 figures (known as WLTP). The CO_2 figures shown however, are based on a calculation designed to be equivalent to the outgoing (NEDC) test cycle and will be used to calculate vehicle tax on first registration. For more information, please see www.volkswagen.co.uk/need-help/wltp or consult your authorised Volkswagen retailer. Data correct at 22.8.19. Figures quoted are for a range of configurations (including non-UK) and are subject to change due to ongoing approvals/changes.

‡ These vehicles are WLTP (Worldwide Harmonised Light-Duty Vehicles Test Procedure) type approved vehicles. More information is available at www.volkswagen.co.uk/need-help/wltp.

SCR (Selective Catalytic Reduction) requires AdBlue®, *please click here* or visit www.volkswagen.co.uk/technology/engines/adblue for more details.

RDE2 refers to Real Driving Emissions Step 2.

EFFECTIVE FROM 24 FEBRUARY 2020.

Environmental information – Passat.

4-DOOR SALOON RANGE.		RDE2 Compliant	Fuel	Transmission	Combined output, PS	Combined CO_2 emission, g/km[1]	Combined Fuel Consumption[2] mpg/ltr per 100km	Combined Energy Consumption[2] miles/kWh	Combined Electric Range, miles/km (WLTP)[3]	City Electric Range, miles/km (WLTP)[3]
GTE ‡	1.4 ltr TSI PHEV ‡	No	Plug-in Hybrid	6-spd auto DSG	218	32	235.4/1.2	3.91	37/59	39/63
GTE ADVANCE ‡	1.4 ltr TSI PHEV ‡	No	Plug-in Hybrid	6-spd auto DSG	218	34	217.3/1.3	3.84	36/58	38/61

1 Range is not only dependent on the efficient use of the battery by the vehicle but also on driver behaviour and other non-technical factors (e.g. environmental conditions). Extra equipment and accessories (add-on parts, tyres etc.) can change relevant vehicle parameters, such as weight, rolling resistance and aerodynamics, and with weather and traffic conditions, can affect range and performance values. This information should be used for illustration purposes only. The 'combined/weighted' fuel consumption/CO_2 figures are calculated from two test results: one when the battery is fully charged and another when the battery is discharged. The two results are a weighted average, taking into account mileage range on battery power only, providing a figure in a variety of charge conditions. Battery charged using mains-sourced electricity via plug-in. Extended range achieved by 1.4 litre TSI petrol engine generating electricity. Fuel consumption and CO_2 emissions figures are obtained under standardised test conditions (Directive 93/116/EEC) using a representative model. This allows direct comparison between different models from different manufacturers, but may not represent the actual fuel consumption achieved in 'real world' driving conditions. Emissions are while driving. More information is available at www.vehicle-certification-agency.gov.uk. Choosing larger alloy wheels than standard may result in increased fuel consumption as well as higher CO_2 emissions and subsequently increased Vehicle Excise Duty (VED) band and BIK rates paid for company car drivers will increase. In some instances, the recommended 'On the road' retail price paid for the vehicle may increase as a result of the increased VED rate. The specifications contained in this price list are for information purposes only and are subject to change.

2 Fuel consumption and CO_2 figures are obtained under standardised EU test conditions (Directive 93/116/EEC). This allows a direct comparison between different manufacturer models but may not represent the actual fuel consumption and CO_2 emissions achieved in 'real world' driving conditions. More information is available on the Volkswagen website at www.volkswagen.co.uk and at www.vehicle-certification-agency.gov.uk.

3 These figures were obtained using a combination of battery power and fuel. The Passat GTE is a plug-in hybrid vehicle requiring mains electricity for charging. Figures shown are for comparability purposes; only compare fuel consumption, CO_2 and electric range figures with other vehicles tested to the same technical procedures. These figures may not reflect real life driving results, which will depend upon a number of factors including the accessories fitted (post-registration), variations in weather, driving styles and vehicle load. There is a new test used for fuel consumption and CO_2 figures (known as WLTP). The CO_2 figures shown however, are based on a calculation designed to be equivalent to the outgoing (NEDC) test cycle and will be used to calculate vehicle tax on first registration.

‡ These vehicles are WLTP (Worldwide Harmonised Light-Duty Vehicles Test Procedure) type approved vehicles. More information is available at www.volkswagen.co.uk/need-help/wltp.

RDE2 refers to Real Driving Emissions Step 2.

EFFECTIVE FROM 24 FEBRUARY 2020.

Environmental information – Passat Estate.

5-DOOR ESTATE RANGE.		RDE2 Compliant	Fuel	Transmission	Output, PS	CO_2 emission, g/km[1], Min.		CO_2 emission, g/km[1], Max.	Combined[1] fuel consumption mpg, Min.		Combined[1] fuel consumption mpg, Max.	Combined[1] fuel consumption ltr/100km, Min.		Combined[1] fuel consumption ltr/100km, Max.
SE‡	1.5 ltr TSI EVO‡	No	Petrol	6-spd manual	150	120	–	122	42.2	–	45.6	6.7	–	6.2
	1.5 ltr TSI EVO‡	No	Petrol	7-spd auto DSG	150	120	–	122	39.8	–	42.8	7.1	–	6.6
	1.6 ltr TDI‡	No	Diesel	7-spd auto DSG	120	111	–	113	44.8	–	48.7	6.3	–	5.8
	2.0 ltr TDI EVO SCR‡	No	Diesel	6-spd manual	150	104	–	106	54.3	–	57.6	5.2	–	4.9
	2.0 ltr TDI EVO SCR‡	No	Diesel	7-spd auto DSG	150	105	–	107	51.4	–	55.4	5.5	–	5.1
SE NAV‡	1.5 ltr TSI EVO‡	No	Petrol	6-spd manual	150	120	–	122	42.2	–	45.6	6.7	–	6.2
	1.5 ltr TSI EVO‡	No	Petrol	7-spd auto DSG	150	120	–	122	39.8	–	42.8	7.1	–	6.6
	1.6 ltr TDI‡	No	Diesel	7-spd auto DSG	120	111	–	113	44.8	–	48.7	6.3	–	5.8
	2.0 ltr TDI EVO SCR‡	No	Diesel	6-spd manual	150	104	–	106	54.3	–	57.6	5.2	–	4.9
	2.0 ltr TDI EVO SCR‡	No	Diesel	7-spd auto DSG	150	105	–	107	51.4	–	55.4	5.5	–	5.1
SEL‡	1.5 ltr TSI EVO‡	No	Petrol	6-spd manual	150	120	–	122	42.2	–	45.6	6.7	–	6.2
	1.5 ltr TSI EVO‡	No	Petrol	7-spd auto DSG	150	120	–	122	39.8	–	42.8	7.1	–	6.6
	2.0 ltr TSI‡	No	Petrol	7-spd auto DSG	190	143	–	146	34.9	–	35.8	8.1	–	7.9
	1.6 ltr TDI‡	No	Diesel	7-spd auto DSG	120	111	–	113	44.8	–	48.7	6.3	–	5.8
	2.0 ltr TDI EVO SCR‡	No	Diesel	6-spd manual	150	104	–	106	54.3	–	57.6	5.2	–	4.9
	2.0 ltr TDI EVO SCR‡	No	Diesel	7-spd auto DSG	150	105	–	107	51.4	–	55.4	5.5	–	5.1
	2.0 ltr TDI SCR‡	No	Diesel	7-spd auto DSG	190	118	–	120	46.3	–	47.9	6.1	–	5.9

1 Figures shown are for comparability purposes; only compare fuel consumption and CO_2 figures with other vehicles tested to the same technical procedures. These figures may not reflect real life driving results, which will depend upon a number of factors including the accessories fitted (post-registration), variations in weather, driving styles and vehicle load. There is a new test used for fuel consumption and CO_2 figures (known as WLTP). The CO_2 figures shown however, are based on a calculation designed to be equivalent to the outgoing (NEDC) test cycle and will be used to calculate vehicle tax on first registration. For more information, please see www.volkswagen.co.uk/need-help/wltp or consult your authorised Volkswagen retailer. Data correct at 22.8.19. Figures quoted are for a range of configurations (including non-UK) and are subject to change due to ongoing approvals/changes.

‡ These vehicles are WLTP (Worldwide Harmonised Light-Duty Vehicles Test Procedure) type approved vehicles. More information is available at www.volkswagen.co.uk/need-help/wltp.

SCR (Selective Catalytic Reduction) requires AdBlue®, *please click here* or visit www.volkswagen.co.uk/technology/engines/adblue for more details.

RDE2 refers to Real Driving Emissions Step 2.

EFFECTIVE FROM 24 FEBRUARY 2020.

Environmental information – Passat Estate.

5-DOOR ESTATE RANGE.		RDE2 Compliant	Fuel	Transmission	Output, PS	CO_2 emission, g/km[1], Min.		CO_2 emission, g/km[1], Max.	Combined[1] fuel consumption mpg, Min.		Combined[1] fuel consumption mpg, Max.	Combined[1] fuel consumption ltr/100km, Min.		Combined[1] fuel consumption ltr/100km, Max.
R-LINE‡	1.5 ltr TSI EVO‡	No	Petrol	6-spd manual	150	122	–	125	41.5	–	44.1	6.8	–	6.4
	1.5 ltr TSI EVO‡	No	Petrol	7-spd auto DSG	150	122	–	125	39.2	–	41.5	7.2	–	6.8
	2.0 ltr TSI‡	No	Petrol	7-spd auto DSG	190	143	–	146	34.9	–	36.2	8.1	–	7.8
	2.0 ltr TDI EVO SCR‡	No	Diesel	6-spd manual	150	106	–	108	53.3	–	56.5	5.3	–	5.0
	2.0 ltr TDI EVO SCR‡	No	Diesel	7-spd auto DSG	150	107	–	109	51.4	–	53.3	5.5	–	5.3
	2.0 ltr TDI SCR‡	No	Diesel	7-spd auto DSG	190	118	–	120	45.6	–	48.7	6.2	–	5.8
	2.0 ltr TDI SCR 4MOTION‡	No	Diesel	7-spd auto DSG	190	129	–	132	42.2	–	45.6	6.7	–	6.2
	2.0 ltr BiTDI SCR 4MOTION‡	No	Diesel	7-spd auto DSG	240	153	–	156	36.2	–	38.2	7.8	–	7.4
R-LINE EDITION‡†	2.0 ltr TSI 4MOTION‡	No	Petrol	7-spd auto DSG	272	162	–	162	32.8	–	33.2	8.6	–	8.5
	2.0 ltr BiTDI SCR 4MOTION‡	No	Diesel	7-spd auto DSG	240	156	–	156	36.2	–	37.2	7.8	–	7.6
ALLTRACK‡	2.0 ltr TDI SCR 4MOTION‡	No	Diesel	7-spd auto DSG	190	127	–	133	42.2	–	46.3	6.7	–	6.1

1 Figures shown are for comparability purposes; only compare fuel consumption and CO_2 figures with other vehicles tested to the same technical procedures. These figures may not reflect real life driving results, which will depend upon a number of factors including the accessories fitted (post-registration), variations in weather, driving styles and vehicle load. There is a new test used for fuel consumption and CO_2 figures (known as WLTP). The CO_2 figures shown however, are based on a calculation designed to be equivalent to the outgoing (NEDC) test cycle and will be used to calculate vehicle tax on first registration. For more information, please see www.volkswagen.co.uk/need-help/wltp or consult your authorised Volkswagen retailer. Data correct at 22.8.19. Figures quoted are for a range of configurations (including non-UK) and are subject to change due to ongoing approvals/changes.

‡ These vehicles are WLTP (Worldwide Harmonised Light-Duty Vehicles Test Procedure) type approved vehicles. More information is available at www.volkswagen.co.uk/need-help/wltp.

† Please note these models may no longer be available to order, or only be available from stock and not available to factory order.

SCR (Selective Catalytic Reduction) requires AdBlue®, *please click here* or visit www.volkswagen.co.uk/technology/engines/adblue for more details.

RDE2 refers to Real Driving Emissions Step 2.

EFFECTIVE FROM 24 FEBRUARY 2020.

Environmental information – Passat Estate.

5-DOOR ESTATE RANGE.		RDE2 Compliant	Fuel	Transmission	Combined output, PS	Combined CO_2 emission, g/km[1]	Combined Fuel Consumption[2] mpg/ltr per 100km	Combined Energy Consumption[2] miles/kWh	Combined Electric Range, miles/km (WLTP)[3]	City Electric Range, miles/km (WLTP)[3]
GTE‡	1.4 ltr TSI PHEV‡	No	Plug-in Hybrid	6-spd auto DSG	218	36	201.8/1.4	3.79	35/57	38/61
GTE ADVANCE‡	1.4 ltr TSI PHEV‡	No	Plug-in Hybrid	6-spd auto DSG	218	37	201.8/1.4	3.72	34/55	37/59

1 Range is not only dependent on the efficient use of the battery by the vehicle but also on driver behaviour and other non-technical factors (e.g. environmental conditions). Extra equipment and accessories (add-on parts, tyres etc.) can change relevant vehicle parameters, such as weight, rolling resistance and aerodynamics, and with weather and traffic conditions, can affect range and performance values. This information should be used for illustration purposes only. The 'combined/weighted' fuel consumption/CO_2 figures are calculated from two test results: one when the battery is fully charged and another when the battery is discharged. The two results are a weighted average, taking into account mileage range on battery power only, providing a figure in a variety of charge conditions. Battery charged using mains-sourced electricity via plug-in. Extended range achieved by 1.4 litre TSI petrol engine generating electricity. Fuel consumption and CO_2 emissions figures are obtained under standardised test conditions (Directive 93/116/EEC) using a representative model. This allows direct comparison between different models from different manufacturers, but may not represent the actual fuel consumption achieved in 'real world' driving conditions. Emissions are while driving. More information is available at www.vehicle-certification-agency.gov.uk. Choosing larger alloy wheels than standard may result in increased fuel consumption as well as higher CO_2 emissions and subsequently increased Vehicle Excise Duty (VED) band and BIK rates paid for company car drivers will increase. In some instances, the recommended 'On the road' retail price paid for the vehicle may increase as a result of the increased VED rate. The specifications contained in this price list are for information purposes only and are subject to change.

2 Fuel consumption and CO_2 figures are obtained under standardised EU test conditions (Directive 93/116/EEC). This allows a direct comparison between different manufacturer models but may not represent the actual fuel consumption and CO_2 emissions achieved in 'real world' driving conditions. More information is available on the Volkswagen website at www.volkswagen.co.uk and at www.vehicle-certification-agency.gov.uk.

3 These figures were obtained using a combination of battery power and fuel. The Passat GTE is a plug-in hybrid vehicle requiring mains electricity for charging. Figures shown are for comparability purposes; only compare fuel consumption, CO_2 and electric range figures with other vehicles tested to the same technical procedures. These figures may not reflect real life driving results, which will depend upon a number of factors including the accessories fitted (post-registration), variations in weather, driving styles and vehicle load. There is a new test used for fuel consumption and CO_2 figures (known as WLTP). The CO_2 figures shown however, are based on a calculation designed to be equivalent to the outgoing (NEDC) test cycle and will be used to calculate vehicle tax on first registration.

‡ These vehicles are WLTP (Worldwide Harmonised Light-Duty Vehicles Test Procedure) type approved vehicles. More information is available at www.volkswagen.co.uk/need-help/wltp.

RDE2 refers to Real Driving Emissions Step 2.

EFFECTIVE FROM 24 FEBRUARY 2020.

CO_2 emissions, BIK % and VED Bands with optional wheels – Passat.

Effect of wheel size on CO_2 emissions, BIK % and VED Bands.

Choosing alternative alloy wheels than standard, as an option, may result in different fuel consumption as well as different CO_2 emissions and subsequently an alternative Vehicle Excise Duty (VED) Band, while BIK rates paid by company car drivers may differ. This is due to the fact that different wheels have both alternative aerodynamic drag and mechanical drag, resulting in different rolling resistance and wind resistance. As a result, the VED Band that the vehicle falls into may differ from its original VED Band when fitted with standard size wheels. In some instances, the recommended 'On the road' retail price paid for the vehicle may change as a result of the change in VED rate. The chart below shows CO_2 emissions and the related VED Bands for vehicles with both standard-fit wheels and larger optional alloy wheels, as well as the different cost payable due to a change in VED Band if applicable.

4-DOOR SALOON RANGE.			Output, PS	Standard wheel size	CO_2 emission, g/km[1], standard wheels	First year VED £, standard wheels	BIK % with standard wheel size[2]	Optional alloy wheel and size	CO_2 emission, g/km[1], optional alloy wheels	First year VED £, optional wheels	BIK % with optional wheel size[2]
SE‡	1.5 ltr TSI EVO‡	6-spd manual	150	17"	117	170.00	**27**	**17" 'London', 17" 'Soho' Anthracite, 17" 'Sebring', 18" 'Oxford' Grey Metallic**	119	170.00	**27**
		6-spd manual	150	17"	117	170.00	**27**	**18" 'Oxford' , 18" 'Liverpool'**	119	170.00	**27**
	1.5 ltr TSI EVO‡	7-spd auto DSG	150	17"	117	170.00	**27**	**17" 'London', 17" 'Soho' Anthracite, 17" 'Sebring', 18" 'Oxford' Grey Metallic**	119	170.00	**27**
		7-spd auto DSG	150	17"	117	170.00	**27**	**18" 'Oxford', 18" 'Liverpool'**	119	170.00	**27**
	1.6 ltr TDI‡	7-spd auto DSG	120	17"	105	170.00	**29**	**17" 'London', 17" 'Soho' Anthracite, 17" 'Sebring', 18" 'Oxford' Grey Metallic**	107	170.00	**29**
		7-spd auto DSG	120	17"	105	170.00	**29**	**18" 'Oxford', 18" 'Liverpool'**	107	170.00	**29**
	2.0 ltr TDI EVO SCR‡	6-spd manual	150	17"	101	170.00	**28**	**17" 'London', 17" 'Soho' Anthracite, 17" 'Sebring', 18" 'Oxford' Grey Metallic**	104	170.00	**28**
		6-spd manual	150	17"	101	170.00	**28**	**18" 'Oxford', 18" 'Liverpool'**	104	170.00	**28**
	2.0 ltr TDI EVO SCR‡	7-spd auto DSG	150	17"	102	170.00	**28**	**17" 'London', 17" 'Soho' Anthracite, 17" 'Sebring', 18" 'Oxford' Grey Metallic**	104	170.00	**28**
		7-spd auto DSG	150	17"	102	170.00	**28**	**18" 'Oxford', 18" 'Liverpool'**	104	170.00	**28**
SE NAV‡	1.5 ltr TSI EVO‡	6-spd manual	150	17"	117	170.00	**27**	**17" 'London', 17" 'Soho' Anthracite, 17" 'Sebring', 18" 'Oxford' Grey Metallic**	119	170.00	**27**
		6-spd manual	150	17"	117	170.00	**27**	**18" 'Oxford' , 18" 'Liverpool'**	119	170.00	**27**
	1.5 ltr TSI EVO‡	7-spd auto DSG	150	17"	117	170.00	**27**	**17" 'London', 17" 'Soho' Anthracite, 17" 'Sebring', 18" 'Oxford' Grey Metallic**	119	170.00	**27**
		7-spd auto DSG	150	17"	117	170.00	**27**	**18" 'Oxford', 18" 'Liverpool'**	119	170.00	**27**
	1.6 ltr TDI‡	7-spd auto DSG	120	17"	105	170.00	**29**	**17" 'London', 17" 'Soho' Anthracite, 17" 'Sebring', 18" 'Oxford' Grey Metallic**	107	170.00	**29**
		7-spd auto DSG	120	17"	105	170.00	**29**	**18" 'Oxford', 18" 'Liverpool'**	107	170.00	**29**
	2.0 ltr TDI EVO SCR‡	6-spd manual	150	17"	101	170.00	**28**	**17" 'London', 17" 'Soho' Anthracite, 17" 'Sebring', 18" 'Oxford' Grey Metallic**	104	170.00	**28**
		6-spd manual	150	17"	101	170.00	**28**	**18" 'Oxford', 18" 'Liverpool'**	104	170.00	**28**
	2.0 ltr TDI EVO SCR‡	7-spd auto DSG	150	17"	102	170.00	**28**	**17" 'London', 17" 'Soho' Anthracite, 17" 'Sebring', 18" 'Oxford' Grey Metallic**	104	170.00	**28**
		7-spd auto DSG	150	17"	102	170.00	**28**	**18" 'Oxford', 18" 'Liverpool'**	104	170.00	**29**

1 Figures shown are for comparability purposes; only compare fuel consumption and CO_2 figures with other vehicles tested to the same technical procedures. These figures may not reflect real life driving results, which will depend upon a number of factors including the accessories fitted (post-registration), variations in weather, driving styles and vehicle load. There is a new test used for fuel consumption and CO_2 figures (known as WLTP). The CO_2 figures shown however, are based on a calculation designed to be equivalent to the outgoing (NEDC) test cycle and will be used to calculate vehicle tax on first registration. For more information, please see www.volkswagen.co.uk/need-help/wltp or consult your authorised Volkswagen retailer.

2 The BIK % figure quoted includes the 4% diesel supplement, where applicable. Please note: the increase in VED and BIK rate that is payable is in addition to the cost of the optional alloy wheels. Please consult your Volkswagen retailer for full details.

‡ These vehicles are WLTP (Worldwide Harmonised Light-Duty Vehicles Test Procedure) type approved vehicles. More information is available at www.volkswagen.co.uk/need-help/wltp.

SCR (Selective Catalytic Reduction) requires AdBlue®, *please click here* or visit www.volkswagen.co.uk/technology/engines/adblue for more details.

VAT IS CALCULATED AT 20%. EFFECTIVE FROM 24 FEBRUARY 2020.

CO_2 emissions, BIK % and VED Bands with optional wheels – Passat.

Effect of wheel size on CO_2 emissions, BIK % and VED Bands.

Choosing alternative alloy wheels than standard, as an option, may result in different fuel consumption as well as different CO_2 emissions and subsequently an alternative Vehicle Excise Duty (VED) Band, while BIK rates paid by company car drivers may differ. This is due to the fact that different wheels have both alternative aerodynamic drag and mechanical drag, resulting in different rolling resistance and wind resistance. As a result, the VED Band that the vehicle falls into may differ from its original VED Band when fitted with standard size wheels. In some instances, the recommended 'On the road' retail price paid for the vehicle may change as a result of the change in VED rate. The chart below shows CO_2 emissions and the related VED Bands for vehicles with both standard-fit wheels and larger optional alloy wheels, as well as the different cost payable due to a change in VED Band if applicable.

4-DOOR SALOON RANGE.			Output, PS	Standard wheel size	CO_2 emission, g/km[1], standard wheels	First year VED £, standard wheels	BIK % with standard wheel size[2]	Optional alloy wheel and size	CO_2 emission, g/km[1], optional alloy wheels	First year VED £, optional wheels	BIK % with optional wheel size[2]
SEL‡	1.5 ltr TSI EVO‡	6-spd manual	150	17"	117	170.00	**27**	**17" 'London', 17" 'Soho' Anthracite, 17" 'Sebring', 18" 'Oxford' Grey Metallic**	119	170.00	**27**
		6-spd manual	150	17"	117	170.00	**27**	**18" 'Oxford', 18" 'Liverpool'**	119	170.00	**27**
	1.5 ltr TSI EVO‡	7-spd auto DSG	150	17"	117	170.00	**27**	**17" 'London', 17" 'Soho' Anthracite, 17" 'Sebring', 18" 'Oxford' Grey Metallic**	119	170.00	**27**
		7-spd auto DSG	150	17"	117	170.00	**27**	**18" 'Oxford', 18" 'Liverpool'**	119	170.00	**27**
	2.0 ltr TSI‡	7-spd auto DSG	190	17"	140	210.00	**32**	**17" 'London', 17" 'Soho' Anthracite, 17" 'Sebring', 18" 'Oxford' Grey Metallic**	143	210.00	**32**
		7-spd auto DSG	190	17"	140	210.00	**32**	**18" 'Oxford', 18" 'Liverpool'**	143	210.00	**32**
	1.6 ltr TDI‡	7-spd auto DSG	120	17"	105	170.00	**29**	**17" 'London', 17" 'Soho' Anthracite, 17" 'Sebring', 18" 'Oxford' Grey Metallic**	107	170.00	**29**
		7-spd auto DSG	120	17"	105	170.00	**29**	**18" 'Oxford', 18" 'Liverpool'**	107	170.00	**29**
	2.0 ltr TDI EVO SCR‡	6-spd manual	150	17"	101	170.00	**28**	**17" 'London', 17" 'Soho' Anthracite, 17" 'Sebring', 18" 'Oxford' Grey Metallic**	104	170.00	**28**
		6-spd manual	150	17"	101	170.00	**28**	**18" 'Oxford', 18" 'Liverpool'**	104	170.00	**28**
	2.0 ltr TDI EVO SCR‡	7-spd auto DSG	150	17"	102	170.00	**28**	**17" 'London', 17" 'Soho' Anthracite, 17" 'Sebring', 18" 'Oxford' Grey Metallic**	104	170.00	**28**
		7-spd auto DSG	150	17"	102	170.00	**28**	**18" 'Oxford', 18" 'Liverpool'**	104	170.00	**28**
	2.0 ltr TDI SCR‡	7-spd auto DSG	190	17"	116	210.00	**31**	**17" 'London', 17" 'Soho' Anthracite, 17" 'Sebring', 18" 'Oxford' Grey Metallic**	118	210.00	**31**
		7-spd auto DSG	190	17"	116	210.00	**31**	**18" 'Oxford', 18" 'Liverpool'**	118	210.00	**31**

1 Figures shown are for comparability purposes; only compare fuel consumption and CO_2 figures with other vehicles tested to the same technical procedures. These figures may not reflect real life driving results, which will depend upon a number of factors including the accessories fitted (post-registration), variations in weather, driving styles and vehicle load. There is a new test used for fuel consumption and CO_2 figures (known as WLTP). The CO_2 figures shown however, are based on a calculation designed to be equivalent to the outgoing (NEDC) test cycle and will be used to calculate vehicle tax on first registration. For more information, please see www.volkswagen.co.uk/need-help/wltp or consult your authorised Volkswagen retailer.

2 The BIK % figure quoted includes the 4% diesel supplement, where applicable. Please note: the increase in VED and BIK rate that is payable is in addition to the cost of the optional alloy wheels. Please consult your Volkswagen retailer for full details.

‡ These vehicles are WLTP (Worldwide Harmonised Light-Duty Vehicles Test Procedure) type approved vehicles. More information is available at www.volkswagen.co.uk/need-help/wltp.

SCR (Selective Catalytic Reduction) requires AdBlue®, *please click here* or visit www.volkswagen.co.uk/technology/engines/adblue for more details.

VAT IS CALCULATED AT 20%. EFFECTIVE FROM 24 FEBRUARY 2020.

CO_2 emissions, BIK % and VED Bands with optional wheels – Passat.

Effect of wheel size on CO_2 emissions, BIK % and VED Bands.

Choosing alternative alloy wheels than standard, as an option, may result in different fuel consumption as well as different CO_2 emissions and subsequently an alternative Vehicle Excise Duty (VED) Band, while BIK rates paid by company car drivers may differ. This is due to the fact that different wheels have both alternative aerodynamic drag and mechanical drag, resulting in different rolling resistance and wind resistance. As a result, the VED Band that the vehicle falls into may differ from its original VED Band when fitted with standard size wheels. In some instances, the recommended 'On the road' retail price paid for the vehicle may change as a result of the change in VED rate. The chart below shows CO_2 emissions and the related VED Bands for vehicles with both standard-fit wheels and larger optional alloy wheels, as well as the different cost payable due to a change in VED Band if applicable.

4-DOOR SALOON RANGE.			Output, PS	Standard wheel size	CO_2 emission, g/km[1], standard wheels	First year VED £, standard wheels	BIK % with standard wheel size[2]	Optional alloy wheel and size	CO_2 emission, g/km[1], optional alloy wheels	First year VED £, optional wheels	BIK % with optional wheel size[2]
R-LINE‡	1.5 ltr TSI EVO‡	6-spd manual	150	18"	119	170.00	**27**	**18" 'Wolverton' Black diamond-turned, 19" 'Verona' Sterling Silver, 19" 'Pretoria' Dark Graphite**	121	170.00	**28**
	1.5 ltr TSI EVO‡	7-spd auto DSG	150	18"	119	170.00	**27**	**18" 'Wolverton' Black diamond-turned, 19" 'Verona' Sterling Silver, 19" 'Pretoria' Dark Graphite**	121	170.00	**28**
	2.0 ltr TSI‡	7-spd auto DSG	190	18"	140	210.00	**32**	**18" 'Wolverton' Black diamond-turned, 19" 'Verona' Sterling Silver, 19" 'Pretoria' Dark Graphite**	143	210.00	**32**
	2.0 ltr TDI EVO SCR‡	6-spd manual	150	18"	104	170.00	**28**	**18" 'Wolverton' Black diamond-turned, 19" 'Verona' Sterling Silver, 19" 'Pretoria' Dark Graphite**	105	170.00	**29**
	2.0 ltr TDI EVO SCR‡	7-spd auto DSG	150	18"	104	170.00	**28**	**18" 'Wolverton' Black diamond-turned, 19" 'Verona' Sterling Silver, 19" 'Pretoria' Dark Graphite**	106	170.00	**29**
	2.0 ltr TDI SCR‡	7-spd auto DSG	190	18"	116	210.00	**31**	**18" 'Wolverton' Black diamond-turned, 19" 'Verona' Sterling Silver, 19" 'Pretoria' Dark Graphite**	118	210.00	**31**
	2.0 ltr TDI SCR 4MOTION‡	7-spd auto DSG	190	18"	126	210.00	**33**	**18" 'Wolverton' Black diamond-turned, 19" 'Verona' Sterling Silver, 19" 'Pretoria' Dark Graphite**	129	210.00	**33**
	2.0 ltr BiTDI SCR 4MOTION‡	7-spd auto DSG	240	18"	148	530.00	**37**	**18" 'Wolverton' Black diamond-turned, 19" 'Verona' Sterling Silver, 19" 'Pretoria' Dark Graphite**	151	855.00	**37**

1 Figures shown are for comparability purposes; only compare fuel consumption and CO_2 figures with other vehicles tested to the same technical procedures. These figures may not reflect real life driving results, which will depend upon a number of factors including the accessories fitted (post-registration), variations in weather, driving styles and vehicle load. There is a new test used for fuel consumption and CO_2 figures (known as WLTP). The CO_2 figures shown however, are based on a calculation designed to be equivalent to the outgoing (NEDC) test cycle and will be used to calculate vehicle tax on first registration. For more information, please see www.volkswagen.co.uk/need-help/wltp or consult your authorised Volkswagen retailer.

2 The BIK % figure quoted includes the 4% diesel supplement, where applicable. Please note: the increase in VED and BIK rate that is payable is in addition to the cost of the optional alloy wheels. Please consult your Volkswagen retailer for full details.

‡ These vehicles are WLTP (Worldwide Harmonised Light-Duty Vehicles Test Procedure) type approved vehicles. More information is available at www.volkswagen.co.uk/need-help/wltp.

SCR (Selective Catalytic Reduction) requires AdBlue®, *please click here* or visit www.volkswagen.co.uk/technology/engines/adblue for more details.

VAT IS CALCULATED AT 20%. EFFECTIVE FROM 24 FEBRUARY 2020.

CO_2 emissions, BIK % and VED Bands with optional wheels – Passat.

Effect of wheel size on CO_2 emissions, BIK % and VED Bands.

Choosing alternative alloy wheels than standard, as an option, may result in different fuel consumption as well as different CO_2 emissions and subsequently an alternative Vehicle Excise Duty (VED) Band, while BIK rates paid by company car drivers may differ. This is due to the fact that different wheels have both alternative aerodynamic drag and mechanical drag, resulting in different rolling resistance and wind resistance. As a result, the VED Band that the vehicle falls into may differ from its original VED Band when fitted with standard size wheels. In some instances, the recommended 'On the road' retail price paid for the vehicle may change as a result of the change in VED rate. The chart below shows CO_2 emissions and the related VED Bands for vehicles with both standard-fit wheels and larger optional alloy wheels, as well as the different cost payable due to a change in VED Band if applicable.

4-DOOR SALOON RANGE.			Output, PS	Standard wheel size	CO_2 emission, g/km[1], standard wheels	First year VED £, standard wheels	BIK % with standard wheel size[2]	Optional alloy wheel and size	CO_2 emission, g/km[1], optional alloy wheels	First year VED £, optional wheels	BIK % with optional wheel size[2]
GTE‡	1.4 ltr TSI PHEV‡	6-spd auto DSG	156	17"	32[3]	0.00	**16**	**17" 'Sebring', 18" 'Oxford' Grey Metallic, 18" 'Oxford', 18" 'Liverpool'**	34	0.00	**16**
GTE ADVANCE‡	1.4 ltr TSI PHEV‡	6-spd auto DSG	156	18"	34[3]	0.00	**16**	**17" 'Sebring', 18" 'Oxford' Grey Metallic, 18" 'Oxford', 18" 'Liverpool', 18" 'Wolverton' Black diamond-turned, 19" 'Verona' Sterling Silver, 19" 'Pretoria' Dark Graphite**	34	0.00	**16**

1 Figures shown are for comparability purposes; only compare fuel consumption and CO_2 figures with other vehicles tested to the same technical procedures. These figures may not reflect real life driving results, which will depend upon a number of factors including the accessories fitted (post-registration), variations in weather, driving styles and vehicle load. There is a new test used for fuel consumption and CO_2 figures (known as WLTP). The CO_2 figures shown however, are based on a calculation designed to be equivalent to the outgoing (NEDC) test cycle and will be used to calculate vehicle tax on first registration. For more information, please see www.volkswagen.co.uk/need-help/wltp or consult your authorised Volkswagen retailer.

2 The BIK % figure quoted includes the 4% diesel supplement, where applicable. Please note: the increase in VED and BIK rate that is payable is in addition to the cost of the optional alloy wheels. Please consult your Volkswagen retailer for full details.

3 These figures were obtained using a combination of battery power and fuel. The Passat GTE is a plug-in hybrid vehicle requiring mains electricity for charging. Figures shown are for comparability purposes; only compare fuel consumption, CO_2 and electric range figures with other vehicles tested to the same technical procedures. These figures may not reflect real life driving results, which will depend upon a number of factors including the accessories fitted (post-registration), variations in weather, driving styles and vehicle load. There is a new test used for fuel consumption and CO_2 figures (known as WLTP). The CO_2 figures shown however, are based on a calculation designed to be equivalent to the outgoing (NEDC) test cycle and will be used to calculate vehicle tax on first registration.

‡ These vehicles are WLTP (Worldwide Harmonised Light-Duty Vehicles Test Procedure) type approved vehicles. More information is available at www.volkswagen.co.uk/need-help/wltp.

RDE2 refers to Real Driving Emissions Step 2.

VAT IS CALCULATED AT 20%. EFFECTIVE FROM 24 FEBRUARY 2020.

CO_2 emissions, BIK % and VED Bands with optional wheels – Passat Estate.

Effect of wheel size on CO_2 emissions, BIK % and VED Bands.

Choosing alternative alloy wheels than standard, as an option, may result in different fuel consumption as well as different CO_2 emissions and subsequently an alternative Vehicle Excise Duty (VED) Band, while BIK rates paid by company car drivers may differ. This is due to the fact that different wheels have both alternative aerodynamic drag and mechanical drag, resulting in different rolling resistance and wind resistance. As a result, the VED Band that the vehicle falls into may differ from its original VED Band when fitted with standard size wheels. In some instances, the recommended 'On the road' retail price paid for the vehicle may change as a result of the change in VED rate. The chart below shows CO_2 emissions and the related VED Bands for vehicles with both standard-fit wheels and larger optional alloy wheels, as well as the different cost payable due to a change in VED Band if applicable.

5-DOOR ESTATE RANGE.			Output, PS	Standard wheel size	CO_2 emission, g/km[1], standard wheels	First year VED £, standard wheels	BIK % with standard wheel size[2]	Optional alloy wheel and size	CO_2 emission, g/km[1], optional alloy wheels	First year VED £, optional wheels	BIK % with optional wheel size[2]
SE‡	1.5 ltr TSI EVO‡	6-spd manual	150	17"	120	170.00	**28**	**17" 'London', 17" 'Soho' Anthracite, 17" 'Sebring', 18" 'Oxford' Grey Metallic**	122	170.00	**28**
		6-spd manual	150	17"	120	170.00	**28**	**18" 'Oxford', 18" 'Liverpool'**	122	170.00	**28**
	1.5 ltr TSI EVO‡	7-spd auto DSG	150	17"	120	170.00	**28**	**17" 'London', 17" 'Soho' Anthracite, 17" 'Sebring', 18" 'Oxford' Grey Metallic**	122	170.00	**28**
		7-spd auto DSG	150	17"	120	170.00	**28**	**18" 'Oxford', 18" 'Liverpool'**	122	170.00	**28**
	1.6 ltr TDI‡	7-spd auto DSG	120	17"	111	210.00	**30**	**17" 'London', 17" 'Soho' Anthracite, 17" 'Sebring', 18" 'Oxford' Grey Metallic**	113	210.00	**30**
		7-spd auto DSG	120	17"	111	210.00	**30**	**18" 'Oxford', 18" 'Liverpool'**	113	210.00	**30**
	2.0 ltr TDI EVO SCR‡	6-spd manual	150	17"	104	170.00	**28**	**17" 'London', 17" 'Soho' Anthracite, 17" 'Sebring', 18" 'Oxford' Grey Metallic**	106	170.00	**29**
		6-spd manual	150	17"	104	170.00	**28**	**18" 'Oxford', 18" 'Liverpool'**	106	170.00	**29**
	2.0 ltr TDI EVO SCR‡	7-spd auto DSG	150	17"	105	170.00	**29**	**17" 'London', 17" 'Soho' Anthracite, 17" 'Sebring', 18" 'Oxford' Grey Metallic**	107	170.00	**29**
		7-spd auto DSG	150	17"	105	170.00	**29**	**18" 'Oxford', 18" 'Liverpool'**	107	170.00	**29**
SE NAV‡	1.5 ltr TSI EVO‡	6-spd manual	150	17"	120	170.00	**28**	**17" 'London', 17" 'Soho' Anthracite, 17" 'Sebring', 18" 'Oxford' Grey Metallic**	122	170.00	**28**
		6-spd manual	150	17"	120	170.00	**28**	**18" 'Oxford', 18" 'Liverpool'**	122	170.00	**28**
	1.5 ltr TSI EVO‡	7-spd auto DSG	150	17"	120	170.00	**28**	**17" 'London', 17" 'Soho' Anthracite, 17" 'Sebring', 18" 'Oxford' Grey Metallic**	122	170.00	**28**
		7-spd auto DSG	150	17"	120	170.00	**28**	**18" 'Oxford', 18" 'Liverpool'**	122	170.00	**28**
	1.6 ltr TDI‡	7-spd auto DSG	120	17"	111	210.00	**30**	**17" 'London', 17" 'Soho' Anthracite, 17" 'Sebring', 18" 'Oxford' Grey Metallic**	113	210.00	**30**
		7-spd auto DSG	120	17"	111	210.00	**30**	**18" 'Oxford', 18" 'Liverpool'**	113	210.00	**30**
	2.0 ltr TDI EVO SCR‡	6-spd manual	150	17"	104	170.00	**28**	**17" 'London', 17" 'Soho' Anthracite, 17" 'Sebring', 18" 'Oxford' Grey Metallic**	106	170.00	**29**
		6-spd manual	150	17"	104	170.00	**28**	**18" 'Oxford', 18" 'Liverpool'**	106	170.00	**29**
	2.0 ltr TDI EVO SCR‡	7-spd auto DSG	150	17"	105	170.00	**29**	**17" 'London', 17" 'Soho' Anthracite, 17" 'Sebring', 18" 'Oxford' Grey Metallic**	107	170.00	**29**
		7-spd auto DSG	150	17"	105	170.00	**29**	**18" 'Oxford', 18" 'Liverpool'**	107	170.00	**29**

1 Figures shown are for comparability purposes; only compare fuel consumption and CO_2 figures with other vehicles tested to the same technical procedures. These figures may not reflect real life driving results, which will depend upon a number of factors including the accessories fitted (post-registration), variations in weather, driving styles and vehicle load. There is a new test used for fuel consumption and CO_2 figures (known as WLTP). The CO_2 figures shown however, are based on a calculation designed to be equivalent to the outgoing (NEDC) test cycle and will be used to calculate vehicle tax on first registration. For more information, please see www.volkswagen.co.uk/need-help/wltp or consult your authorised Volkswagen retailer.

2 The BIK % figure quoted includes the 4% diesel supplement, where applicable. Please note: the increase in VED and BIK rate that is payable is in addition to the cost of the optional alloy wheels. Please consult your Volkswagen retailer for full details.

‡ These vehicles are WLTP (Worldwide Harmonised Light-Duty Vehicles Test Procedure) type approved vehicles. More information is available at www.volkswagen.co.uk/need-help/wltp.

SCR (Selective Catalytic Reduction) requires AdBlue®, *please click here* or visit www.volkswagen.co.uk/technology/engines/adblue for more details.

VAT IS CALCULATED AT 20%. EFFECTIVE FROM 24 FEBRUARY 2020.

CO_2 emissions, BIK % and VED Bands with optional wheels – Passat Estate.

Effect of wheel size on CO_2 emissions, BIK % and VED Bands.

Choosing alternative alloy wheels than standard, as an option, may result in different fuel consumption as well as different CO_2 emissions and subsequently an alternative Vehicle Excise Duty (VED) Band, while BIK rates paid by company car drivers may differ. This is due to the fact that different wheels have both alternative aerodynamic drag and mechanical drag, resulting in different rolling resistance and wind resistance. As a result, the VED Band that the vehicle falls into may differ from its original VED Band when fitted with standard size wheels. In some instances, the recommended 'On the road' retail price paid for the vehicle may change as a result of the change in VED rate. The chart below shows CO_2 emissions and the related VED Bands for vehicles with both standard-fit wheels and larger optional alloy wheels, as well as the different cost payable due to a change in VED Band if applicable.

5-DOOR ESTATE RANGE.			Output, PS	Standard wheel size	CO_2 emission, g/km[1], standard wheels	First year VED £, standard wheels	BIK % with standard wheel size[2]	Optional alloy wheel and size	CO_2 emission, g/km[1], optional alloy wheels	First year VED £, optional wheels	BIK % with optional wheel size[2]
SEL‡	1.5 ltr TSI EVO‡	6-spd manual	150	17"	120	170.00	**28**	**17" 'London', 17" 'Soho' Anthracite, 17" 'Sebring', 18" 'Oxford' Grey Metallic**	122	170.00	**28**
		6-spd manual	150	17"	120	170.00	**28**	**18" 'Oxford', 18" 'Liverpool'**	122	170.00	**28**
	1.5 ltr TSI EVO‡	7-spd auto DSG	150	17"	120	170.00	**28**	**17" 'London', 17" 'Soho' Anthracite, 17" 'Sebring', 18" 'Oxford' Grey Metallic**	122	170.00	**28**
		7-spd auto DSG	150	17"	120	170.00	**28**	**18" 'Oxford', 18" 'Liverpool'**	122	170.00	**28**
	2.0 ltr TSI‡	7-spd auto DSG	190	17"	143	210.00	**33**	**17" 'London', 17" 'Soho' Anthracite, 17" 'Sebring', 18" 'Oxford' Grey Metallic**	146	210.00	**33**
		7-spd auto DSG	190	17"	143	210.00	**33**	**18" 'Oxford', 18" 'Liverpool'**	146	210.00	**33**
	1.6 ltr TDI‡	7-spd auto DSG	120	17"	111	210.00	**30**	**17" 'London', 17" 'Soho' Anthracite, 17" 'Sebring', 18" 'Oxford' Grey Metallic**	113	210.00	**30**
		7-spd auto DSG	120	17"	111	210.00	**30**	**18" 'Oxford', 18" 'Liverpool'**	113	210.00	**30**
	2.0 ltr TDI EVO SCR‡	6-spd manual	150	17"	104	170.00	**28**	**17" 'London', 17" 'Soho' Anthracite, 17" 'Sebring', 18" 'Oxford' Grey Metallic**	106	170.00	**29**
		6-spd manual	150	17"	104	170.00	**28**	**18" 'Oxford', 18" 'Liverpool'**	106	170.00	**29**
	2.0 ltr TDI EVO SCR‡	7-spd auto DSG	150	17"	105	170.00	**29**	**17" 'London', 17" 'Soho' Anthracite, 17" 'Sebring', 18" 'Oxford' Grey Metallic**	107	170.00	**29**
		7-spd auto DSG	150	17"	105	170.00	**29**	**18" 'Oxford', 18" 'Liverpool'**	107	170.00	**29**
	2.0 ltr TDI SCR‡	7-spd auto DSG	190	17"	118	210.00	**32**	**17" 'London', 17" 'Soho' Anthracite, 17" 'Sebring', 18" 'Oxford' Grey Metallic**	120	210.00	**32**
		7-spd auto DSG	190	17"	118	210.00	**32**	**18" 'Oxford', 18" 'Liverpool'**	120	210.00	**32**

1 Figures shown are for comparability purposes; only compare fuel consumption and CO_2 figures with other vehicles tested to the same technical procedures. These figures may not reflect real life driving results, which will depend upon a number of factors including the accessories fitted (post-registration), variations in weather, driving styles and vehicle load. There is a new test used for fuel consumption and CO_2 figures (known as WLTP). The CO_2 figures shown however, are based on a calculation designed to be equivalent to the outgoing (NEDC) test cycle and will be used to calculate vehicle tax on first registration. For more information, please see www.volkswagen.co.uk/need-help/wltp or consult your authorised Volkswagen retailer.

2 The BIK % figure quoted includes the 4% diesel supplement, where applicable. Please note: the increase in VED and BIK rate that is payable is in addition to the cost of the optional alloy wheels. Please consult your Volkswagen retailer for full details.

‡ These vehicles are WLTP (Worldwide Harmonised Light-Duty Vehicles Test Procedure) type approved vehicles. More information is available at www.volkswagen.co.uk/need-help/wltp.

SCR (Selective Catalytic Reduction) requires AdBlue®, *please click here* or visit www.volkswagen.co.uk/technology/engines/adblue for more details.

VAT IS CALCULATED AT 20%. EFFECTIVE FROM 24 FEBRUARY 2020.

CO_2 emissions, BIK % and VED Bands with optional wheels – Passat Estate.

Effect of wheel size on CO_2 emissions, BIK % and VED Bands.

Choosing alternative alloy wheels than standard, as an option, may result in different fuel consumption as well as different CO_2 emissions and subsequently an alternative Vehicle Excise Duty (VED) Band, while BIK rates paid by company car drivers may differ. This is due to the fact that different wheels have both alternative aerodynamic drag and mechanical drag, resulting in different rolling resistance and wind resistance. As a result, the VED Band that the vehicle falls into may differ from its original VED Band when fitted with standard size wheels. In some instances, the recommended 'On the road' retail price paid for the vehicle may change as a result of the change in VED rate. The chart below shows CO_2 emissions and the related VED Bands for vehicles with both standard-fit wheels and larger optional alloy wheels, as well as the different cost payable due to a change in VED Band if applicable.

5-DOOR ESTATE RANGE.			Output, PS	Standard wheel size	CO_2 emission, g/km[1], standard wheels	First year VED £, standard wheels	BIK % with standard wheel size[2]	Optional alloy wheel and size	CO_2 emission, g/km[1], optional alloy wheels	First year VED £, optional wheels	BIK % with optional wheel size[2]
R-LINE‡	1.5 ltr TSI EVO‡	6-spd manual	150	18"	122	170.00	**28**	**18" 'Wolverton' Black diamond-turned, 19" 'Verona' Sterling Silver, 19" 'Pretoria' Dark Graphite**	125	170.00	**29**
	1.5 ltr TSI EVO‡	7-spd auto DSG	150	18"	122	170.00	**28**	**18" 'Wolverton' Black diamond-turned, 19" 'Verona' Sterling Silver, 19" 'Pretoria' Dark Graphite**	125	170.00	**29**
	2.0 ltr TSI‡	7-spd auto DSG	190	18"	143	210.00	**32**	**18" 'Wolverton' Black diamond-turned, 19" 'Verona' Sterling Silver, 19" 'Pretoria' Dark Graphite**	146	210.00	**33**
	2.0 ltr TDI EVO SCR‡	6-spd manual	150	18"	106	170.00	**29**	**18" 'Wolverton' Black diamond-turned, 19" 'Verona' Sterling Silver, 19" 'Pretoria' Dark Graphite**	108	170.00	**29**
	2.0 ltr TDI EVO SCR‡	7-spd auto DSG	150	18"	107	170.00	**29**	**18" 'Wolverton' Black diamond-turned, 19" 'Verona' Sterling Silver, 19" 'Pretoria' Dark Graphite**	109	170.00	**29**
	2.0 ltr TDI SCR‡	7-spd auto DSG	190	18"	118	210.00	**31**	**18" 'Wolverton' Black diamond-turned, 19" 'Verona' Sterling Silver, 19" 'Pretoria' Dark Graphite**	120	210.00	**32**
	2.0 ltr TDI SCR 4MOTION‡	7-spd auto DSG	190	18"	129	210.00	**33**	**18" 'Wolverton' Black diamond-turned, 19" 'Verona' Sterling Silver, 19" 'Pretoria' Dark Graphite**	132	530.00	**34**
	2.0 ltr BiTDI SCR 4MOTION‡	7-spd auto DSG	240	18"	153	855.00	**37**	**18" 'Wolverton' Black diamond-turned, 19" 'Verona' Sterling Silver, 19" 'Pretoria' Dark Graphite**	156	855.00	**37**

1 Figures shown are for comparability purposes; only compare fuel consumption and CO_2 figures with other vehicles tested to the same technical procedures. These figures may not reflect real life driving results, which will depend upon a number of factors including the accessories fitted (post-registration), variations in weather, driving styles and vehicle load. There is a new test used for fuel consumption and CO_2 figures (known as WLTP). The CO_2 figures shown however, are based on a calculation designed to be equivalent to the outgoing (NEDC) test cycle and will be used to calculate vehicle tax on first registration. For more information, please see www.volkswagen.co.uk/need-help/wltp or consult your authorised Volkswagen retailer.

2 The BIK % figure quoted includes the 4% diesel supplement, where applicable. Please note: the increase in VED and BIK rate that is payable is in addition to the cost of the optional alloy wheels. Please consult your Volkswagen retailer for full details.

‡ These vehicles are WLTP (Worldwide Harmonised Light-Duty Vehicles Test Procedure) type approved vehicles. More information is available at www.volkswagen.co.uk/need-help/wltp.

SCR (Selective Catalytic Reduction) requires AdBlue®, *please click here* or visit www.volkswagen.co.uk/technology/engines/adblue for more details.

VAT IS CALCULATED AT 20%. EFFECTIVE FROM 24 FEBRUARY 2020.

CO_2 emissions, BIK % and VED Bands with optional wheels – Passat Estate.

Effect of wheel size on CO_2 emissions, BIK % and VED Bands.

Choosing alternative alloy wheels than standard, as an option, may result in different fuel consumption as well as different CO_2 emissions and subsequently an alternative Vehicle Excise Duty (VED) Band, while BIK rates paid by company car drivers may differ. This is due to the fact that different wheels have both alternative aerodynamic drag and mechanical drag, resulting in different rolling resistance and wind resistance. As a result, the VED Band that the vehicle falls into may differ from its original VED Band when fitted with standard size wheels. In some instances, the recommended 'On the road' retail price paid for the vehicle may change as a result of the change in VED rate. The chart below shows CO_2 emissions and the related VED Bands for vehicles with both standard-fit wheels and larger optional alloy wheels, as well as the different cost payable due to a change in VED Band if applicable.

5-DOOR ESTATE RANGE.			Output, PS	Standard wheel size	CO_2 emission, g/km[1], standard wheels	First year VED £, standard wheels	BIK % with standard wheel size[2]	Optional alloy wheel and size	CO_2 emission, g/km[1], optional alloy wheels	First year VED £, optional wheels	BIK % with optional wheel size[2]
R-LINE EDITION ‡†	2.0 ltr TSI 4MOTION ‡	7-spd auto DSG	272	19"	162	530.00	**36**	**N/A**	N/A	N/A	**N/A**
	2.0 ltr BiTDI SCR 4MOTION ‡	7-spd auto DSG	240	19"	156	855.00	**37**	**N/A**	N/A	N/A	**N/A**
ALLTRACK ‡	2.0 ltr TDI SCR 4MOTION ‡	7-spd auto DSG	190	18"	127	210.00	**33**	**19" 'Albertville'**	133	530.00	**34**

1 Figures shown are for comparability purposes; only compare fuel consumption and CO_2 figures with other vehicles tested to the same technical procedures. These figures may not reflect real life driving results, which will depend upon a number of factors including the accessories fitted (post-registration), variations in weather, driving styles and vehicle load. There is a new test used for fuel consumption and CO_2 figures (known as WLTP). The CO_2 figures shown however, are based on a calculation designed to be equivalent to the outgoing (NEDC) test cycle and will be used to calculate vehicle tax on first registration. For more information, please see www.volkswagen.co.uk/need-help/wltp or consult your authorised Volkswagen retailer.

2 The BIK % figure quoted includes the 4% diesel supplement, where applicable. Please note: the increase in VED and BIK rate that is payable is in addition to the cost of the optional alloy wheels. Please consult your Volkswagen retailer for full details.

‡ These vehicles are WLTP (Worldwide Harmonised Light-Duty Vehicles Test Procedure) type approved vehicles. More information is available at www.volkswagen.co.uk/need-help/wltp.

† Please note these models may no longer be available to order, or only be available from stock and not available to factory order.

SCR (Selective Catalytic Reduction) requires AdBlue®, *please click here* or visit www.volkswagen.co.uk/technology/engines/adblue for more details.

VAT IS CALCULATED AT 20%. EFFECTIVE FROM 24 FEBRUARY 2020.

CO_2 emissions, BIK % and VED Bands with optional wheels – Passat Estate.

Effect of wheel size on CO_2 emissions, BIK % and VED Bands.

Choosing alternative alloy wheels than standard, as an option, may result in different fuel consumption as well as different CO_2 emissions and subsequently an alternative Vehicle Excise Duty (VED) Band, while BIK rates paid by company car drivers may differ. This is due to the fact that different wheels have both alternative aerodynamic drag and mechanical drag, resulting in different rolling resistance and wind resistance. As a result, the VED Band that the vehicle falls into may differ from its original VED Band when fitted with standard size wheels. In some instances, the recommended 'On the road' retail price paid for the vehicle may change as a result of the change in VED rate. The chart below shows CO_2 emissions and the related VED Bands for vehicles with both standard-fit wheels and larger optional alloy wheels, as well as the different cost payable due to a change in VED Band if applicable.

5-DOOR ESTATE RANGE.			Output, PS	Standard wheel size	CO_2 emission, g/km[1], standard wheels	First year VED £, standard wheels	BIK % with standard wheel size[2]	Optional alloy wheel and size	CO_2 emission, g/km[1], optional alloy wheels	First year VED £, optional wheels	BIK % with optional wheel size[2]
GTE‡	1.4 ltr TSI PHEV‡	6-spd auto DSG	156	17"	36	0.00	**16**	**17" 'Sebring', 18" 'Oxford' Grey Metallic, 18" 'Oxford', 18" 'Liverpool'**	37	0.00	**16**
GTE ADVANCE‡	1.4 ltr TSI PHEV‡	6-spd auto DSG	156	18"	37	0.00	**16**	**17" 'Sebring', 18" 'Oxford' Grey Metallic, 18" 'Oxford', 18" 'Liverpool', 18" 'Wolverton' Black diamond-turned, 19" 'Verona' Sterling Silver, 19" 'Pretoria' Dark Graphite**	37	0.00	**16**

1 Figures shown are for comparability purposes; only compare fuel consumption and CO_2 figures with other vehicles tested to the same technical procedures. These figures may not reflect real life driving results, which will depend upon a number of factors including the accessories fitted (post-registration), variations in weather, driving styles and vehicle load. There is a new test used for fuel consumption and CO_2 figures (known as WLTP). The CO_2 figures shown however, are based on a calculation designed to be equivalent to the outgoing (NEDC) test cycle and will be used to calculate vehicle tax on first registration. For more information, please see www.volkswagen.co.uk/need-help/wltp or consult your authorised Volkswagen retailer.

2 The BIK % figure quoted includes the 4% diesel supplement, where applicable. Please note: the increase in VED and BIK rate that is payable is in addition to the cost of the optional alloy wheels. Please consult your Volkswagen retailer for full details.

‡ These vehicles are WLTP (Worldwide Harmonised Light-Duty Vehicles Test Procedure) type approved vehicles. More information is available at www.volkswagen.co.uk/need-help/wltp.

VAT IS CALCULATED AT 20%. EFFECTIVE FROM 24 FEBRUARY 2020.

Company car taxation chart – tax year 2019/20.

How to calculate your company car income tax liability – effective 6.4.2019

Use the car's CO_2 emission figure to look up the Benefit in Kind (BIK) %

↓

Multiply the BIK % by the sum of the car's P11D value [1]

↓

Multiply by employee income tax rating (19% [2], 20%, 21% [2], 40%, 41% [2], 45% or 46% [2])

↓

That's the tax you'll pay for your car in 2019/2020

The government is retaining the diesel supplement in company car tax until 2021, when EU-wide testing procedures will ensure new diesel cars meet air quality standards even under strict 'real world' driving conditions. From 6 April 2018 drivers must add 4% to their appropriate percentage if the car is propelled solely by diesel (up to a maximum of 37%).

From 2020/21, the BIK percentages for zero emission cars will reduce from 16% to 2%, whilst BEV/PHEV cars with CO_2 emissions between 1-50g/km will vary between 2% and 14%, depending on the electric range (miles).

For further details of company car tax, please consult your authorised Volkswagen retailer, or visit www.volkswagen.co.uk/offers-and-finance/fleet/calculators/company-car-tax-calculator. Full details can be found at www.assets.publishing.service.gov.uk/government/uploads/system/uploads/attachment_data/file/815268/190617_-_WLTP_-_summary_of_responses_v2.2.pdf

1 P11D values given in this price list are based on standard specification models with no factory-fitted options or other accessories. If your car includes factory-fitted options or other accessories, you may need to adjust the P11D value to take this into account.
2 From 6 April 2018, new income tax rates have been introduced for Scottish Taxpayers, these figures reflect the new Scottish rates. For full details of Scottish BIK tax liability, please refer to the *Benefit In Kind for Scottish Residents section*
3 Subject to UK Government announcements.
4 Diesel cars that are tested to RDE2 standards.

Emissions CO_2 (g/km)	2019/20 Benefit in Kind (BIK)		2020/21 Benefit in Kind (BIK)			2021/22 Benefit in Kind (BIK) [3]		
	Petrol/ Electric	Diesel	Electric range miles	Petrol/Electric/ Diesel [4]	Diesel	Electric range miles	Petrol/Electric/ Diesel [4]	Diesel
0 (EV)	16%			0%			1%	
1-50	16%		130 or above	2%		130 or above	2%	
1-50	16%		70-129	5%		70-129	5%	
1-50	16%		40-69	8%		40-69	8%	
1-50	16%		30-39	12%		30-39	12%	
1-50	16%		1-29	14%		1-29	14%	
51-54	19%			15%			15%	
55-59	19%			16%			16%	
60-64	19%			17%			17%	
65-69	19%			18%			18%	
70-74	19%			19%			19%	
75	19%			20%			20%	
76-79	22%	26%		20%	24%		20%	24%
80-84	22%	26%		21%	25%		21%	25%
85-89	22%	26%		22%	26%		22%	26%
90-94	22%	26%		23%	27%		23%	27%
95-99	23%	27%		24%	28%		24%	28%
100-104	24%	28%		25%	29%		25%	29%
105-109	25%	29%		26%	30%		26%	30%
110-114	26%	30%		27%	31%		27%	31%
115-119	27%	31%		28%	32%		28%	32%
120-124	28%	32%		29%	33%		29%	33%
125-129	29%	33%		30%	34%		30%	34%
130-134	30%	34%		31%	35%		31%	35%
135-139	31%	35%		32%	36%		32%	36%
140-144	32%	36%		33%	37%		33%	37%
145-149	33%	37%		34%	37%		34%	37%
150-154	34%	37%		35%	37%		35%	37%
155-159	35%	37%		36%	37%		36%	37%
160-164	36%	37%		37%	37%		37%	37%
165-169	37%	37%		37%	37%		37%	37%
170-174	37%	37%		37%	37%		37%	37%
175-179	37%	37%		37%	37%		37%	37%
180+	37%	37%		37%	37%		37%	37%

Taxable percentage of P11D value (Diesel figures include the 4% diesel supplement)

Company car taxation comparison.

3-year taxation comparison guide.

PASSAT SALOON.			RDE2 Compliant	Output, PS	CO_2 emission, g/km[1]	Basic Recommended Retail £	VAT £	Total Recommended Retail £	Tax year commencing	P11D Value £	BIK %[2]	Annual cost at 20%[3] tax rate £	Annual cost at 40%[3] tax rate £
SE‡	1.6 ltr TDI‡	7-spd auto DSG	No	120	105	22,483.33	4,496.67	**26,980.00**	**2019/20**	**27,615.00**	**29**	**1,601.67**	**3,203.34**
									2020/21	**27,615.00**	**30**	**1,656.90**	**3,313.80**
									2021/22	**27,615.00**	**30**	**1,656.90**	**3,313.80**
R-LINE‡	2.0 ltr TSI‡	7-spd auto DSG	No	190	140	26,983.33	5,396.67	**32,380.00**	**2019/20**	**33,015.00**	**32**	**2,112.96**	**4,225.92**
									2020/21	**33,015.00**	**33**	**2,178.99**	**4,357.98**
									2021/22	**33,015.00**	**33**	**2,178.99**	**4,357.98**
PASSAT ESTATE.													
SE‡	1.6 ltr TDI‡	7-spd auto DSG	No	120	111	24,145.83	4,829.17	**28,975.00**	**2019/20**	**29,610.00**	**30**	**1,776.60**	**3,553.20**
									2020/21	**29,610.00**	**31**	**1,835.82**	**3,671.64**
									2021/22	**29,610.00**	**31**	**1,835.82**	**3,671.64**
R-LINE‡	2.0 ltr TSI‡	7-spd auto DSG	No	190	143	28,645.83	5,729.17	**34,375.00**	**2019/20**	**35,010.00**	**32**	**2,240.64**	**4,481.28**
									2020/21	**35,010.00**	**33**	**2,310.66**	**4,621.32**
									2021/22	**35,010.00**	**33**	**2,310.66**	**4,621.32**

1 Figures shown are for comparability purposes; only compare fuel consumption and CO_2 figures with other vehicles tested to the same technical procedures. These figures may not reflect real life driving results, which will depend upon a number of factors including the accessories fitted (post-registration), variations in weather, driving styles and vehicle load. There is a new test used for fuel consumption and CO_2 figures (known as WLTP). The CO_2 figures shown however, are based on a calculation designed to be equivalent to the outgoing (NEDC) test cycle and will be used to calculate vehicle tax on first registration. For more information, please see www.volkswagen.co.uk/need-help/wltp or consult your authorised Volkswagen retailer.
2 The BIK % figure quoted includes the 4% diesel supplement, where applicable.
3 From 6 April 2018, new income tax rates have been introduced for Scottish Taxpayers. For full details of Scottish BIK tax liability, please refer to the *Benefit In Kind for Scottish Residents section*
‡ These vehicles are WLTP (Worldwide Harmonised Light-Duty Vehicles Test Procedure) type approved vehicles. More information is available at www.volkswagen.co.uk/need-help/wltp.
All examples are for manual derivatives unless otherwise stated.
RDE2 refers to Real Driving Emissions Step 2.

Volkswagen UK may change RRPs at any time (this includes where there are government changes in regulation and/or legislation).
There may be a delay to any RRP displaying correctly on our materials. Always obtain prices from your chosen authorised Volkswagen retailer.

VAT IS CALCULATED AT 20%. EFFECTIVE FROM 24 FEBRUARY 2020.

Volkswagen service.

VOLKSWAGEN FINANCE[1]

Volkswagen Finance specialises in providing funding solutions for Volkswagen drivers. Whether your Volkswagen is for private or business use, you can choose from a range of funding options.

Solutions – a Personal Contract Plan
Flexible finance plan designed to allow you to drive a new vehicle sooner than you think. At the end of your agreement you can choose to trade in your Volkswagen for a new one, keep it, or hand it back.

Hire Purchase
A simple and straightforward way to finance your Volkswagen. Have the option to break down your monthly payments over a period that suits you, making financing your car much more manageable than you think.

Contract Hire
Available for both personal and business customers. Ideal for customers simply wanting to pay a monthly rental for the vehicle, change it on a regular fixed period and have no disposal risk.

- Lease Purchase
- Finance Lease

With all Volkswagen Finance products you can choose a fixed-cost maintenance plan to help you budget for your servicing and maintenance costs. Buy your service plan online or visit your local Volkswagen retailer for more information.

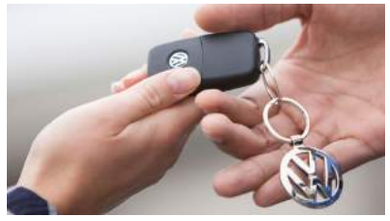

FUEL CONSUMPTION AND CO_2 EMISSIONS

Fuel consumption and CO_2 figures are obtained under standardised EU test conditions (Directive 93/116/EEC). This allows a direct comparison between different manufacturer models but may not represent the actual fuel consumption achieved in 'real world' driving conditions. More information is available on the Volkswagen website at **www.volkswagen.co.uk** and at **www.dft.gov.uk/vca**. The weight of a vehicle will influence the level of CO_2 emissions it produces; as a result, vehicles with higher levels of specification and factory-fitted options may emit higher levels of CO_2. Choosing larger alloy wheels than those fitted as standard may result in increased fuel consumption as well as higher CO_2 emissions and subsequently an increased Vehicle Excise Duty (VED) band. BIK rates paid by company car drivers may also increase. In some instances, the recommended 'On the road' retail price paid for a vehicle may increase as a result of the increased VED rate. CO_2 is the main greenhouse gas responsible for global warming. The specifications contained in this brochure are for information purposes only and are subject to change.

ANNUAL CAR INSURANCE

Volkswagen car insurance helps give you peace of mind with the following benefits at no extra cost:

- Repairs carried out by Volkswagen trained technicians using Volkswagen Genuine Parts and paints when repaired by a Volkswagen approved repairer
- Guaranteed courtesy car
- Child seat replacement
- Uninsured driver promise
- Vandalism promise
- 24 hour accident recovery

For more information or to get a quote, visit **www.insurewithvolkswagen.co.uk**

VOLKSWAGEN INSURANCE[2]

We want you to start enjoying your new car from day one, and thanks to our complimentary five day Volkswagen Drive Away Insurance you can. Please visit **www.insurewithvolkswagen.co.uk/driveaway** to activate your cover. If eligible, we will also give you a quotation for our annual insurance, designed specifically for Volkswagen drivers.

SERVICING AND MAINTENANCE

Volkswagen is pleased to offer you a choice on how your Volkswagen is serviced. The appropriate selection is entirely dependent on how the car is likely to be driven and its general use. To help you identify which type of service would be most suitable, please refer to the following guide.

Fixed Service
The Fixed Service is recommended for vehicles that will cover less than 10,000 miles in 12 months and if the vehicle is likely to be used in the following way:

- Predominantly urban driving, short journeys with frequent cold starts.
- Activities regularly producing high engine loading, e.g. frequent hill climbs, driving with vehicle fully loaded and towing.
- Uneconomical driving style using high rpms with heavy acceleration and heavy braking.

The service intervals for the Fixed Service schedule are as follows:

- Oil change service – After 1 year or 10,000 miles (15,000km), whichever is soonest.
- Inspection service[3] – First after 2 years or 20,000 miles (30,000km), then every 1 year or 20,000 miles (30,000km), whichever is soonest.

SERVICING AND MAINTENANCE (CONTINUED)

Flexible Service
The Flexible Service is recommended for vehicles with daily mileage of more than 25 miles where the vehicle is driven regularly mainly on longer distance journeys. The vehicle is driven mainly at a constant speed with minimum vehicle and engine loading, minimal towing and driven in an economical manner. With the Flexible Service the vehicle can cover anywhere between 10,000[4] and a maximum of 20,000[4] miles or 24 months (whichever is soonest) between oil changes.

The service intervals for the Flexible Service schedule are as follows:

- Oil change service – According to flexible service interval display (after 2 years at the latest).
- Inspection service[3] – First after 2 years or 20,000 miles (30,000km), then every one year or 20,000 miles (30,000km), whichever is soonest.

The up! model is only available with the Fixed Service schedule. Please consult your authorised Volkswagen retailer or repairer for advice and full details.

Electric vehicles
Vehicles powered only by an electric motor require a Fixed Service schedule as follows:

- Inspection service – First after 2 years or 20,000 miles (30,000km), whichever is soonest.
- Subsequent services every 1 year or 20,000 miles (30,000km), whichever is soonest.

Please note: If you purchase a Volkswagen Fixed Price Service Plan your vehicle will follow the Fixed Service schedule.

APPROVED ACCESSORIES

A comprehensive range of accessories from alloy wheels to carpet mats is available to complement the factory-fitted option list. Volkswagen approved accessories purchased from and fitted by your authorised Volkswagen retailer at the point of vehicle sale will also benefit from the three-year vehicle warranty.

TAX FREE SALES

For full details, please contact your authorised Volkswagen retailer.

ADBLUE®

Diesel engines with SCR (Selective Catalytic Reduction) technology require AdBlue® which must be kept topped up. Please see **www.volkswagen.co.uk/technology/engines/adblue** for more details.

1 Finance is available to 18s and over, subject to status. Terms and conditions apply. Volkswagen Finance.
2 Volkswagen Car Insurance is underwritten by U K Insurance Limited. Registered Office: The Wharf, Neville Street, Leeds LS1 4AZ. Registered in England and Wales number: 1179980. U K Insurance Limited is authorised by the Prudential Regulation Authority and regulated by the Financial Conduct Authority (FCA) and the Prudential Regulation Authority. Calls may be recorded. Volkswagen Financial Services is a trading name of Volkswagen Financial Services (UK) Limited ('VWFS UK'), registered in England and Wales number: 2835230 (Registered Office: Brunswick Court, Yeomans Drive, Blakelands, Milton Keynes MK14 5LR). Volkswagen Insurance Service (Great Britain) Ltd. is an appointed representative of VWFS UK. VWFS UK is authorised and regulated by the FCA, registration number: 311988. Authorisation details for both organisations can be checked on the Financial Services Register by visiting www.fca.org.uk. VWFS UK and U K Insurance Limited are not part of the same corporate group.
3 The inspection service first at 2 years (or 40,000 miles) and then every second year (or 40,000 miles) has additional workscope.
4 The quoted mileage is based on a conversion from kilometres and is therefore unlikely to exceed circa 18,000 miles between oil changes.

Volkswagen service (continued).

VOLKSWAGEN ENSURANCE[1]

Get three years' Volkswagen Ensurance cover for free.

Another great benefit of being a Volkswagen driver. If your Volkswagen was damaged in an accident, wouldn't you want it fixed by a Volkswagen trained technician using only Genuine Volkswagen Parts? Ensurance is Volkswagen's accident and repair cover which does exactly that. It works alongside your main comprehensive motor insurance policy no matter who you are insured with, to make sure you get the quality repair and service you would want. If you're involved in an accident or your car is stolen, just one call to us and we'll look after your claim from start to finish, ensuring your Volkswagen is restored to the highest standard.

Activate your cover and benefit from:

- A guarantee that your Volkswagen will be repaired by a Volkswagen approved repairer and Volkswagen trained technicians, using only Genuine Volkswagen Parts and paints.
- A dedicated Claims Manager who will manage your claim from start to finish, liaising with your insurer and the repairer so you don't have to.
- Help to recover any uninsured losses using our Legal Expenses Cover.
- Online claims tracking so you can keep up to date with the status of any claim.

Volkswagen Ensurance is free to all Volkswagen customers for three years and it only takes a minute to get cover.

To find out more and to activate your cover, visit **www.insurewithvolkswagen.co.uk/ensurance**

WARRANTY

Exclusions and terms and conditions apply to all warranties, plans and insurance listed. For pricing and further details of Volkswagen Warranties, Service Plans and Insurance, please consult your authorised Volkswagen retailer or repairer, or visit www.volkswagen.co.uk

THE VOLKSWAGEN WARRANTY THREE-YEAR WARRANTY

All Volkswagen passenger cars come with a three-year/60,000 miles warranty, which protects your car against the failure of most technical and electrical components due to manufacturing defects. This comprises a two-year manufacturer's warranty with unlimited mileage plus a further one-year/60,000 miles (whichever is soonest) Retailer Warranty[2]. Should the mileage exceed 60,000 miles within the first two years, the manufacturer's two-year warranty will still be valid. Full details of the three-year warranty are available from your authorised Volkswagen retailer or repairer.

BODY PROTECTION WARRANTY

The internal body sections and panels are covered against rusting through from the inside for 12 years. Naturally, the vehicle must be cared for in compliance with the manufacturer's operating instructions. Please consult your authorised Volkswagen retailer or repairer for full warranty details.

THREE-YEAR PAINTWORK WARRANTY

This latest paintwork warranty, pioneered by Volkswagen, provides you with cover on a new car. Naturally, during the warranty period the car must be cared for in compliance with the manufacturer's operating instructions. Any paintwork defects, as a result of the manufacturing process, will be rectified without charge.

VOLKSWAGEN ROADSIDE ASSISTANCE

Every new car is registered for Volkswagen Roadside Assistance for one year except the Touareg which is registered for three years. This provides vehicle roadside and home recovery in the unlikely event of a breakdown in the UK and Europe (subject to conditions). Volkswagen Roadside Assistance can also be purchased for subsequent years.

Exclusions and terms and conditions apply. For pricing and further details of Volkswagen Roadside Assistance, please consult your authorised Volkswagen retailer, or visit www.volkswagen.co.uk

VOLKSWAGEN EV AND PHEV EIGHT-YEAR BATTERY WARRANTY

1. A guarantee for eight years or 99,360 miles/ 160,000km (whichever is soonest), on all material or manufacturing defects.

2. Gradual reduction in battery capacity over times is integral to the nature of the component, and does not represent a defect under the terms of this guarantee, as long as the reduction in capacity is not in excess of the value specified for this vehicle in the owner's manual.

3. With the exception of the warranty term, all warranty conditions stipulated by the Volkswagen retailer selling the vehicle (prerequisites, criteria for freedom from defects, exclusions, settlement of claims, entry into force and start of extended warranty term, scope of application etc.) also apply to the high voltage battery.

EV AND PHEV VEHICLE HOME CHARGING

Home charging using a domestic socket will depend on the condition and suitability of the wiring in your home. Always consult a qualified electrician before charging when using a domestic socket for the first time, or, if the socket is to be used as the primary source of charging. Domestic sockets on the same circuit as other appliances, particularly those in frequent use, will draw additional amperage which may result in a breaker switch being 'tripped'. Establishing a separate circuit for home charging will help ensure your electric vehicle is supplied with a consistent, uninterrupted current. For optimum charging, we recommend installing an electric vehicle charging point at home.

VOLKSWAGEN EV AND PHEV SPECIALIST RETAILER NETWORK

GTE models are only available for sale through an authorised specialist Volkswagen retailer. These retailers have the ability to provide the highest levels of service when purchasing your GTE model. For details of your nearest authorised specialist Volkswagen retailer, please visit **www.volkswagen.co.uk** for more details.

PRICES AND SPECIFICATIONS

The prices and specifications contained in this price list are for information purposes only as our products are continually updated and changes may be made to the prices and specifications at any time. If you require any specific feature, please consult your authorised Volkswagen retailer who is regularly updated with any change in specification. Prices and specifications are subject to change without notice.

Following the announcement of a price increase, any vehicle order which can be accepted into the factory production system before the effective date of the price increase will be supplied at the current price, even if built and delivered after the date on which the increase became effective.

Note: We would like to advise you that telephone calls to Volkswagen Customer Care may be monitored and recorded as part of our training and quality assurance processes. All our monitoring and recording processes meet Oftel regulations.

BENEFIT IN KIND (BIK) FOR SCOTTISH RESIDENTS

Effective as of 6 April 2018, the Scottish Government introduced their own BIK taxation structure. This is only applicable to Company Car Drivers that are resident Scottish taxpayers. HMRC will continue to be responsible for the collection and management of taxes and will determine whether or not an individual is a Scottish taxpayer based on where their primary place of residence is.

Scottish Income Tax rates and Bands 2018/19

Starter rate 19%
over £11,850 - £13,850

Basic rate of 20%
over £13,850 - £24,000

Intermediate rate 21%
over £24,000 - £44,273

Higher rate 41%
over £44,273 - £150,000

Top rate 46%
above £150,000

1 Ensurance from Volkswagen Financial Services is sold and administered by Lawshield UK Limited, registered in England number: 3360532. Registered office: Lawshield House, 850 Ibis Court, Lakeside Drive, Centre Park, Warrington, Cheshire, WA1 1RL and underwritten by UK General Insurance Limited on behalf of Great Lakes Insurance SE. Great Lakes Insurance SE is a German insurance company with its headquarters at Königinstrasse 107, 80802 Munich. UK Branch office: Plantation Place, 30 Fenchurch Street, London, EC3M 3AJ. Lawshield UK Limited is authorised and regulated by the Financial Conduct Authority (FCA). Authorisation details can be checked on the FCA's register at www.fca.org.uk. Great Lakes Insurance SE, UK Branch, is authorised by Bundesanstalt für Finanzdienstleistungsaufsicht and subject to limited regulation by the Financial Conduct Authority and Prudential Regulation Authority. Details about the extent of their regulation by the Financial Conduct Authority and Prudential Regulation Authority are available on request.

2 All warranty work must be completed by an authorised Volkswagen retailer or repairer.

Volkswagen service plan.

An additional way to keep your perfect car, perfect for longer.

Exclusions and terms apply, *please click here* for more details. For pricing and further details of the Volkswagen Service Plan, please consult your authorised Volkswagen retailer or visit www.volkswagen.co.uk

Volkswagen Service Plan – retail sales only

We offer Volkswagen Service Plans to cover all new models for their first two consecutive services in line with the Fixed Service schedule required on the vehicle. Your car will be in the hands of Volkswagen trained technicians who use specialist Volkswagen tools, technology and Volkswagen original parts, and all parts and labour are guaranteed for two years. What's more, the Volkswagen Service Plan will remain with the vehicle should you decide to sell your car.

Volkswagen Service Plan – retail sales only
For vehicles under 1 year old set to the Fixed Service regime that has not had its first service, comprising first two manufacturer's scheduled services:

- 'Oil service' including oil filter change
- 'Oil service' including oil filter change and 'Inspection service' plus a pollen filter replacement (if required)

Excludes electric vehicles. Service plan covers first two consecutive services, limited to 1x 'Oil service' and 1x 'Oil and Inspection service'. T&Cs apply: All vehicles must be set to the Fixed Service regime by the retailer. Maximum age of car is 12 months (Service plan must be taken out before first service is due). Additional work, including wear and tear is excluded. Servicing must be carried out in line with the requirement of the Service Schedule. All work must be carried out by an Authorised Volkswagen Repairer. Offers may be varied or withdrawn at any time. Plan validity is dependent on required payments received. Administered by Volkswagen Financial Services. Retail sales only. For pricing and further details, please consult your authorised Volkswagen retailer or visit www.volkswagen.co.uk

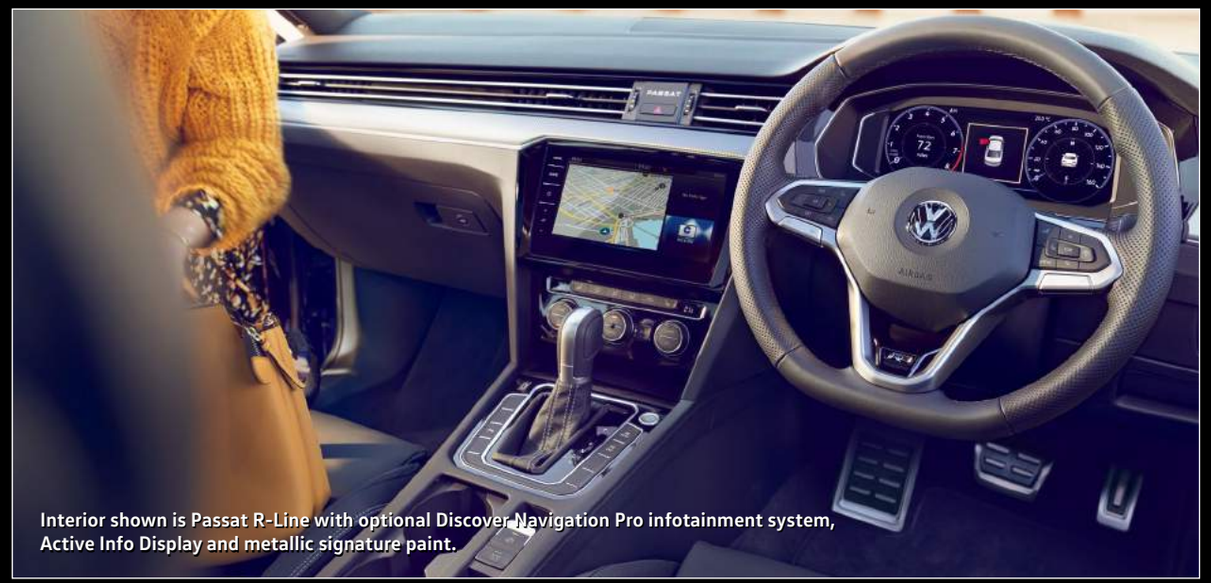

Interior shown is Passat R-Line with optional Discover Navigation Pro infotainment system, Active Info Display and metallic signature paint.

Model shown is Passat SEL with optional 'IQ. Light' LED matrix headlights, 17" 'London' alloy wheels, panoramic sunroof and metallic paint.

The Passat and Passat Estate

Issued by Volkswagen Marketing, Volkswagen (UK)
© Volkswagen Group United Kingdom Limited 2020
Issue: 24 February 2020

Volkswagen Information Service
Telephone: 0800 333 666
Internet: www.volkswagen.co.uk

Volkswagen Fleet Business Centre
Telephone: 0800 0093 397
Internet: www.volkswagen.co.uk/offers-and-finance/fleet

This brochure can be viewed or downloaded in pdf format at:
www.volkswagen.co.uk

Prices, specifications, features, technical and other information (including fuel consumption, CO_2 emissions and range) are updated regularly and are subject to change without notice (this may include changes between order and delivery). There may be a delay in updates to our materials – always consult your authorised Volkswagen retailer for the latest information.