Collection Australia
2021

Immerse yourself in the digital world of V-ZUG

Background information, videos and photos: there's something interesting behind every QR code. Discover more about your favourite product, get to know the latest functions and find supplementary information. How it works: simply scan the QR code with your smartphone camera to discover exciting content.

Contents

3 Contents
5 Swiss perfection for your home
7 Our contribution to the future
8 The ideal appliance for every kitchen
9 Appliance combinations
10 Timeless design and modern functions
12 A function to meet your every need

14 Combi-Steam Ovens
17 Why cook with Steam?
18 Combi-Steam oven Cleaning & Maintenance
19 Product comparison Combi-Steam ovens
20 Combi-Steam Ovens
22 Dimensions
24 Combi-Steam accessories

29 Combair Ovens
32 Combair oven cleaning
33 Product comparison Combair ovens
34 Combair Ovens
36 Dimensions
37 Combair oven accessories
40 Warming Drawer highlights
41 Vacuum Drawer highlights
42 Vacuum and Warming Drawers
44 Dimensions
46 Vacuum and Warming Drawer accessories
50 Coffee Centre
51 Dimensions
51 Coffee-Centre accessories

53 Cooktops
54 An option to suit every kitchen
58 Designed for every kitchen
59 Slide Control or Touchscreen
60 Product comparison Induction cooktops
62 Induction Cooktops
68 Dimensions
78 Product comparison Gas cooktops
79 Gas Cooktops
82 Dimensions
87 Induction and Gas Cooktop Accessories

89 Rangehoods
92 Striking or discreet?
94 Built in Rangehoods - invisible, powerful, efficient
96 Product comparison Downdraft extraction
97 Downdraft Extractors
99 Dimensions
102 AiroClear Rangehoods - powerful, quiet, effective
103 Easy to clean and user-friendly
104 Product comparison AiroClear integrated Rangehoods
105 AiroClear Rangehoods
106 Dimensions
107 Rangehood Filters

109 Dishwashers
111 Beautiful design meets efficiency and functionality.
112 Dishwashers that provide performance, innovation and sustainability
114 Product comparisonDishwashers
118 Dimensions
121 Dishwashers accessories

123 Supreme Cooling
124 A new dimension in cooling
125 Features at a glance
126 CombiCooler V6000 Supreme
126 Cooler V6000 Supreme
127 Freezer V6000 Supreme
127 WineCooler V6000 Supreme
128 Dimensions
129 Supreme Cooling accessories

131 Fabric Care
132 AdoraWash V6000 designed for today and tomorrow
135 Sophisticated technology that's simple to use
136 Wide range of wash programmes for every need and every garment
138 Variety of drying programmes
140 Product comparison
140 Adora washing machines
141 Product comparison
141 Adora tumble dryers
144 Adora V2000 Fabric Care Programs
144 Adora V6000 Fabric Care Programs
144 Adora Fabric Care accessories
145 Dimensions

147 RefreshButler
151 Exclusive programmes for delicate fabrics
152 RefreshButler
153 Dimensions
153 RefreshButler Accessories

155 Accessories
156 Range hood and Extraction installation accessories
160 Operating Modes at a glance

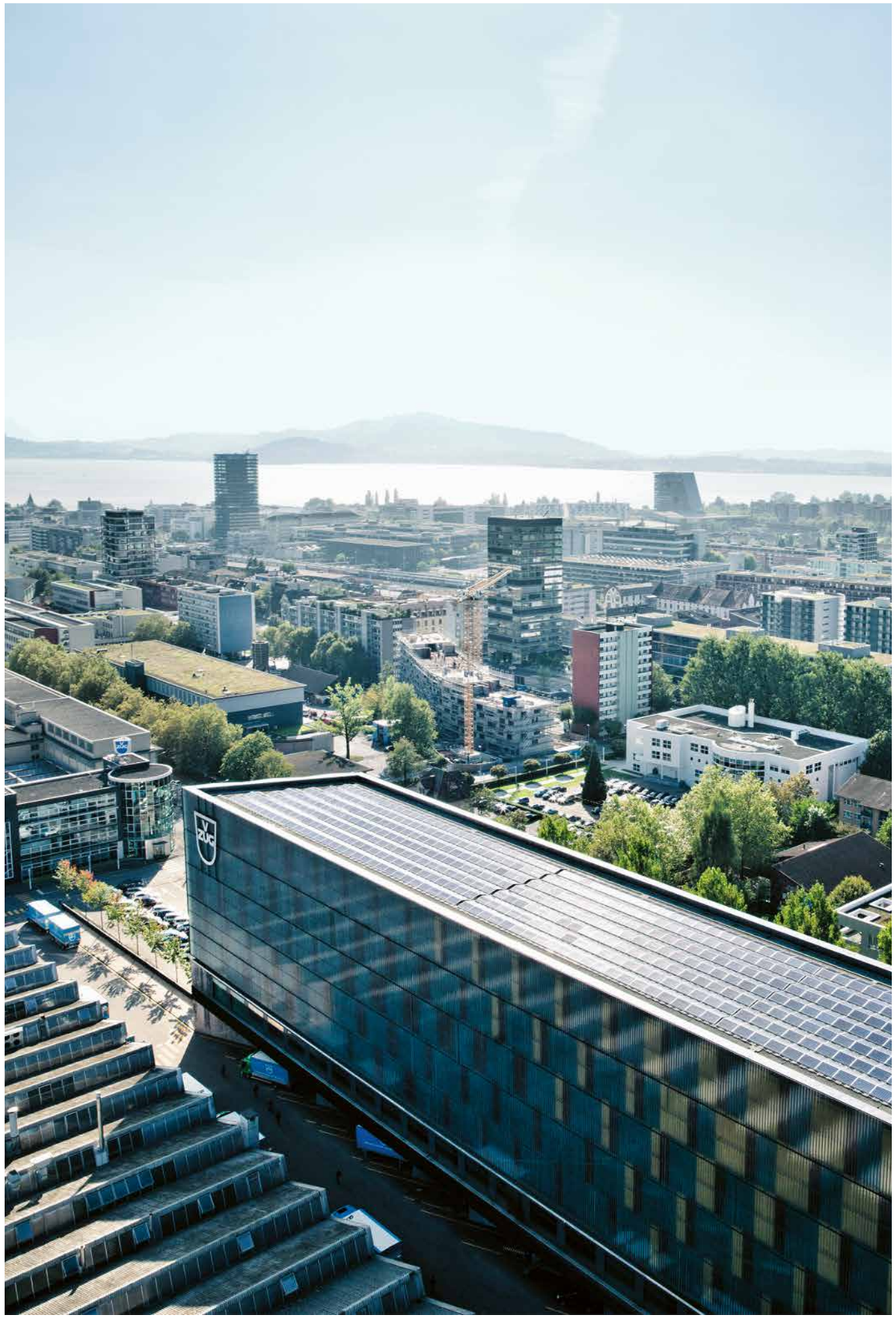

Swiss perfection for your home

V-ZUG is Switzerland's leading brand in household appliances. We have been developing and producing household appliances in the heart of Switzerland for over 100 years. Not only do our products make everyday life easier, they also excite and inspire our customers – for a whole lifetime of enjoyment.

For more than 100 years, it has been our mission to make everyday life easier with our high-quality, innovative household appliances. Whether cooking, cleaning dishes or washing clothes: People who expect their appliances to deliver more than just the basics need look no further than us. As the Swiss market leader, we live by Swiss values – and make it possible for people all over the world to experience these with simple, individual solutions that provide lifelong inspiration and delight. This is what we mean by "Swiss perfection for your home".

Established in Switzerland

Switzerland is a nation of inventors, the country of precision watches and the home of world-famous chocolate. At the centre of all this is the vibrant and prosperous economic region of Zug. Here, in the heart of Switzerland, is where our roots lie. Not just geographically, but also ideologically. Over the course of our 100-year history, the distinctive features of our country have merged with the ideals of our company. To this very day, we still display this pride in our heritage in our company name. The "V" stands for our history as a galvanising plant (Verzinkerei in German) and "ZUG" for our commitment to the Zug region and to Switzerland.

At home around the world

Nowadays, people all over the world value the innovative strength so closely associated with Switzerland, the high level of precision we deliver and the outstanding quality of our products. Over ten years ago, we decided to reach beyond our national borders and make our high-quality household appliances available around the world. Since then, we have gained ground in selected markets, providing discerning customers with a choice range of premium products and excellent service.

We are building the future, committed to Switzerland

Our location in Switzerland continues to play a key role: in order to ensure the continued success of our research, development and production here, we are making our workplace fit for the future. By 2033, there will be an entirely new neighbourhood on our grounds, which will strengthen the company, the industrial location of Zug and Switzerland as a manufacturing base. A further milestone has been achieved with the inauguration of our Mistral production facility in 2016. Additional construction work has already begun, and the site is in a constant state of development. We are also setting new standards in the expansion of our vertical factory through introducing the new pressing plant in June 2019.

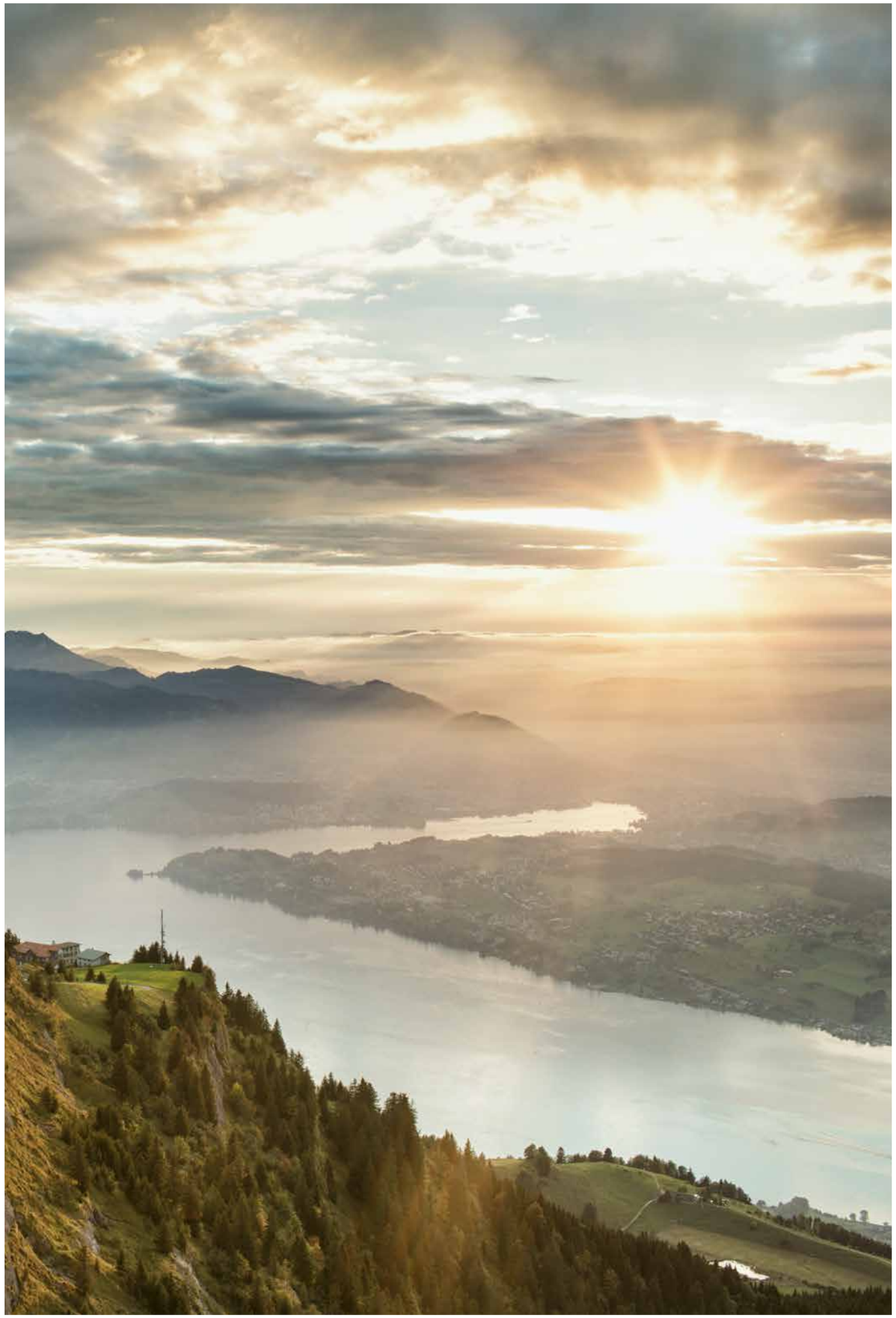

Our contribution to the future

As a responsible stakeholder, we advocate sustainability in the economy, in society and in the environment, both locally and internationally.

In most homes, household appliances account for a large proportion of the energy and water we use in our day-to-day lives. So energy efficiency plays an important role in our purchasing decisions these days. Anyone who has invested in one of our cutting-edge appliances saves valuable resources every day, which is also kinder to the household budget. We support people who believe in the importance of a responsible lifestyle. For example, we are the first company in the world to fit dishwashers, washing machines and dryers with a heat pump – thereby setting new standards for energy consumption in these categories.

We are also an active member of the FEA (the Swiss trade body for manufacturers of household and commercial electrical appliances) and the industry's only leading partner in the Minergie association for resource-efficient living and working.

Taking responsibility

We want to motivate our customers to make their households more environmentally friendly on a day-to-day basis. Improving energy efficiency does not have to mean sacrificing comfort and convenience. Quite the opposite: take our dishwashers, for instance, which achieve top marks in energy and water consumption even for the fastest programmes. Incidentally, our heat pump dishwashers are the only ones of their kind on the market. Those who choose an appliance of this type are opting for premium quality, since dishwashers with a heat pump use up to 50% less energy.

A conscious commitment to sustainability

Our commitment starts at an even earlier stage – during the production process. At our production site in Zug, we are pursuing the ambitious goal of constantly reducing our CO_2 emissions. And we are already well on the way to achieving this. All of the power we use for production is already hydroelectric, a renewable energy source. And at our ZUGgate logistics centre, we operate one of the canton's largest private photovoltaic systems. Along with further energy-saving measures in the building, this ensures that our entire logistics centre is environmentally self-sufficient. In addition to energy management, we are also committed to issues such as waste management, material and resource efficiency, sustainable procurement, employee development, health and safety in the workplace, and equal opportunities – a commitment that takes a holistic approach to sustainability.

The ideal appliance for every kitchen

Whether you choose one appliance that can do everything or a suite of ovens for increased capacity and even greater flexibility – our range can be tailored to create the perfect personalised solution for your lifestyle.

Size selection

Choose your perfect combination from the 60cm, 45cm and 38cm options to suit your space, lifestyle and design.

Model selection

Our luxury Combi-Steam range all provide our full suite of automated programs and operating modes for steaming, baking, roasting and combination cooking. Additionally, the Combair-Steam SL and MSLQ offer top and bottom elements as well as a grill, making them a wonderful single oven option as well as a side by side companion for our Combair range. The MSLQ also provides microwave capability that can be used on its own, or, to further speed up cooking times without compromising on results.

60cm

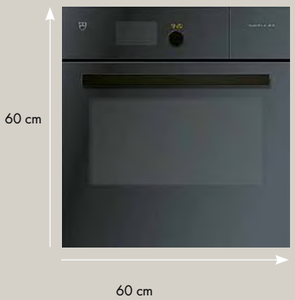

Available in the following categories:

- Combi-Steam MSLQ
- Combair-Steam SL
- Combair Ovens

45cm

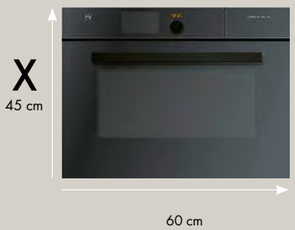

Available in the following categories:

- Combi-Steam oven
- Combair XSLP
- Coffee-Centers

38cm

Available in the following categories:

- Combi-Steam oven

Appliance combinations

To meet all needs: depending on the available niche, you can combine multiple appliances for the perfect solution.

2 ovens 45 cm

Winecooler 90 cm*

Oven 45 cm above Coffee Center 45 cm

Oven above warming drawer

Oven 45 cm above vacuum drawer 14 cm

Coffee Center 45 cm above warming drawer 14 cm

2 ovens 45 cm. Below, warming drawer 14 cm and vacuum drawer 14 cm

Coffee Center 45 cm above warming drawer 14 cm

*Winecooler available Q4 2020

Timeless design and modern functions

Our signature black mirror glass finish compliments any kitchen design and palette. A choice of handle style is available for selected products. Our innovative full colour display panel is sleek and easy to use, allowing intuitive interaction with our unique automated and user controlled programs.

Innovative and intuitive control

All of our luxury models feature our full colour electronic display with our innovative dial control to select the function you need with ease.

The Combi-Steam MSLQ features a touch screen allowing you to simply tap the function you want directly on the screen. The dial control is available as an alternative option.

Our Combi-Steam HSL and Combair SE/P models are created with the monochrome graphic display alongside the dial control for easy selection and setting adjustments.

Colour graphic display

Graphic display (monochrome)

Handle styles

For those who prefer an intergrated, streamlined design, we also offer retractable handles on selected models.

Black designer handle

Retractable handle

A function to meet your every need

Our range of Combi-Steam and Combair ovens offer excellent versatility with a variety of functions that take you from everyday to dinner party with ease.

Steam

Gentle steam ensures that food retains its vitamins, minerals, colours and moisture for enhanced flavour, texture and nutrition.

Hot air with steaming

Hot air and steam are combined to give your dishes the perfect balance between browning and moisture. Our patented climate control system automatically measures and adjusts the levels of steam making it simple and effective.

Hot air humid

Retain the moisture from your dish inside the oven to bake without drying. Perfect for cakes, roasting, casseroles and braising.

BakeOmatic™

Using unique sensor technology, the BakeOmatic function intuitively detects the moisture in your dish to automatically set the cooking time and temperature. Choose from a range of delicious everyday foods.

Hygiene

Sterilise and preserve at the touch of a button in your own home. The Hygiene program is perfect for keeping household items clean and fresh, preparing jars to fill and creating your own professionally sealed preserves.

Vacuisine

Precise temperature and moisture control, with reduced levels of steam, provide the perfect environment for sous vide cooking. What was once exclusive to professional chefs can now be done at home. Perfect texture and flavour.

Professional Baking

Thanks to the combination of an automated steam phase and hot air at increased temperature, your breads and puff pastries will be light and airy with an exceptional crust.

Soft Roasting™

Roasting meats to perfection couldn't be simpler. Just select the desired internal temperature for your beef, pork or lamb and set your desired serving time.

RegenerateOmatic™

Unique to V-ZUG, the RegenerateOmatic function automatically determines the perfect balance of steam and hot air to reheat dishes whilst retaining moisture, texture and flavour.

PizzaPlus

Combining hot air and heat from the base of your oven, pizzas, quiches and tarts are always crisp on the bottom while fillings and toppings are cooked more gently with no need for blind baking.

Combi-Steam Ovens

The ultimate in convenience and versatility, our range of Combi-Steam ovens provide a solution for avid chefs and entertainers, as well as reluctant home cooks. A lifestyle solution that offers perfect results through accurate control or unique automated programs.

Combi-Steam Cooking – simple, efficient, versatile

There are many advantages to V-ZUG Combi-Steam Cooking. From the simplicity of our unique automated programs to the unrivaled efficiency and endless versatility.

Simple

Our range of exclusive programs will help to make creating your everyday dishes simple. BakeOMatic provides you with a range of commonly cooked food types for you to prepare you own recipe and let the oven take care of the rest - setting temperature, cooking duration and controlling the moisture levels. Our Soft Roasting program, combined with our food probe, delivers exceptionally cooked meats at the touch of a button while the unique Vacuisine option brings the domain of the restaurant Chef into your own kitchen with ease.

Efficient

With an incredibly fast heat up time and quick steam creation your will be cooking before you know it. Using Steam for fast and nutritious cooking will deliver perfect results for your vegetables and grains. Combining steam and fan forced heat with Hot Air+Steaming can reduce your cooking time while providing the perfect balance between moisture and browning.

Versatile

With their unique Climate Control System technology to accurately control both temperature and moisture levels, Combi-Steam cooking is incredibly versatile. From roasting and baking to steaming, defrosting and reheating there is almost nothing this luxury appliance can't do.

Why cook with Steam?

Having the option to cook with Steam in your oven is a positive for nutrition, flavour, colour and texture.

Steam in its simplest form

V-ZUG's history in steam cooking is market leading and our first Combi-Steam entered the market in 2001. Unique technology intuitively controls the amount of steam inside your oven removing the guesswork and simplifying the user experience.

Cooking with steam is useful for so many of your everyday foods, from grains and vegetables to dumplings and desserts. It also opens the door to sous vide style cooking, usually the domain of the professional chef. Simply set the temperature and let the oven control and monitor the moisture for stunning results.

Combi-Steam MSLQ with power functions

The Combi-Steam MSLQ with its additional microwave capabilities has the power to cook even faster without compromising the results. This premium product is the world's first appliance to combine three cooking methods with the ability to combine fan forced heat with steam and microwave simultaneously. PowerRegeneration shortens the heating time by around 25% while at the same time enhancing the quality of the food. Preservation of the mineral and vitamin C content is up to 30% greater when using PowerSteam. PowerPlus combines your everyday cooking functions with microwaving for those times when you need it most.

Combi-Steam oven Cleaning & Maintenance

Thanks to an external steam generator, our Combi-Steam ovens are very easy to clean and maintain.

Clean and ready to go again in no time

Cleaning the cooking space takes no time at all – just give the smooth surfaces a quick wipe with a cloth afer cooking and you're done. This is because the steam is produced in an external generator. As a result, only pure steam gets into the oven so no limescale can form in the first place. A climate sensor also monitors humidity during steaming and ensures there is virtually no water left over at the end. The appliance indicates the best time to descale the steam generator too which is a simple guided process that keeps your oven functioning at its optimal level..

Fixed water connection and rapid steam reduction

Thanks to the Combi-Steam XSL F's plumbed water intake and drain, fresh water is available for steaming at all times. The steam reduction button manually activates rapid extraction of the steam during operation, to allow additional food to be placed in the oven more conveniently. This function runs automatically at the end of cooking so food can be immediately removed. There is no need to top up the water reservoir – this is only required for descaling.

Product comparison Combi-Steam ovens

	Combi-Steam MSLQ	Combi-Steam XSL	Combi-Steam XSL F Fixed water connection	Combair-Steam SL	Combi-Steam HSL
Design					
Black mirror glass	■	■	■	■	■
Retractable handle		■*	■*		
Interior lighting/automatic with door	■/■	■/■	■/■	■/■	■/■
Cooking space volume (l)	55	51	51	55	34
Stainless steel cooking space		■	■		■
DualEnamel cooking space	■			■	
Appliance height (cm)	60	45	45	60	38
Exclusive V-ZUG features					
Vacuisine/precise temperature	■/■	■/■	■/■	■/■	■/■
GourmetSteam	■	■	■	■	■
BakeOmatic with climate control system (CCS)	■	■	■	■	■
Soft roasting	■	■	■	■	■
RegenerateOmatic	■	■	■	■	■
Regeneration	■	■	■	■	■
PowerRegeneration	■				
Professional baking	■	■	■	■	■
Food probe	■	■	■	■	■
Electronic Steam System (ESS)	■	■	■	■	■
Integrated cookbook recipes	■	■	■	■	■
Operating Modes					
Steam	■	■	■	■	■
PowerSteam	■				
Top/bottom heat	■			■	
Hot air	■	■	■	■	■
Hot air with steaming	■	■	■	■	■
PizzaPlus	■			■	
Hot air humid	■	■	■	■	■
Grill/Convection grill	■			■	
Microwave	■				
Wellness	■	■	■	■	■
Hygiene	■	■	■	■	■
Keep warm	■	■	■	■	■
Operation and display					
Full-colour graphic display (10 languages)	■	■	■	■	
Touchscreen	■				
Monochrome graphic display (10 languages)					■
Steam reduction function			■		
Descaling programme	■	■	■	■	■

■ = featuredt * optional

Combi-Steam Ovens

Combi-Steam MSLQ

A world first innovation that combines an oven, Combi-Steam and microwave in a single appliance.

Operating modes

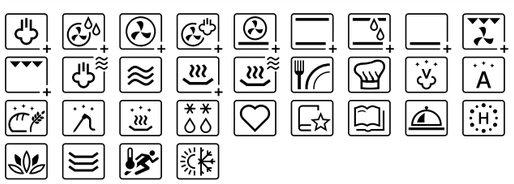

Operation and display

- Full-colour graphic display, touchscreen
- TouchControl and adjusting knob
- Electronic clock timer
- Number of languages in display 10
- Cooking space DualEmail
- Recipe book included

Appliance information

Appliance size	598 × 596 × 568.1 mm		
Connection	220-240 V~	3700 W	16 A

Version	Item number	RRP
Black mirror glass		
Fixed Handle	2301575002	**$13,299**

Combi-Steam XSL

Our signature product offering steam, baking, roasting, combination cooking and reheating. Available in Fixed Water and Retractable handle options.

Operating modes

Operation and display

- Full-colour graphic display
- TouchControl and adjusting knob
- Electronic clock timer
- Number of languages in display 10
- Cooking space Stainless steel
- Recipe book included
- Fixed water and drain connection (XSLF)

Appliance information

Appliance size	454 × 596.7 × 567 mm		
Connection	220-240 V~	3700 W	16 A

Version	Item numbe	RRP
Black mirror glass		
Built-in water tank		
Retractable handle	2300675042	**$8,499**
Fixed Handle	2300575002	**$7,499**
Fixed water connection		
Retractable handle	2300875322	**$9,499**
Fixed Handle	2300775002	**$8,999**

Combair-Steam SL

All of the features of our Combi-Steam together with the benefits of our Combair oven. The perfect all in one solution.

Operating modes

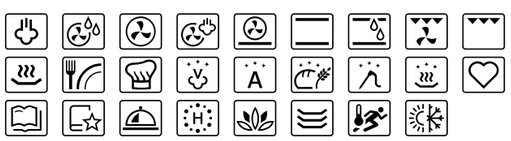

Operation and display

- Full-colour graphic display
- TouchControl and adjusting knob
- Electronic clock timer
- Number of languages in display 10
- Cooking space DualEmail
- Recipe book included

Appliance information

Appliance size	598 × 596 × 568.1 mm		
Connection	220-240 V~	3700 W	16 A

Version	Item number	RRP
Black mirror glass		
Fixed Handle	2301275002	**$9,499**

Combi-Steam HSL

All of the features of our Combi-Steam together with the benefits of our Combair oven. The perfect all in one solution.

Operating modes

Operation and display

- Graphic display
- TouchControl and adjusting knob
- Electronic clock timer
- Number of languages in display 10
- Cooking space Stainless steel
- Recipe book included

Appliance information

Appliance size	378 × 596.7 × 567.4 mm		
Connection	220-240 V~	3500 W	16 A

Version	Item number	RRP
Black mirror glass		
Fixed Handle	2300475002	**$4,699**

Dimensions

Combi-Steam MSLQ

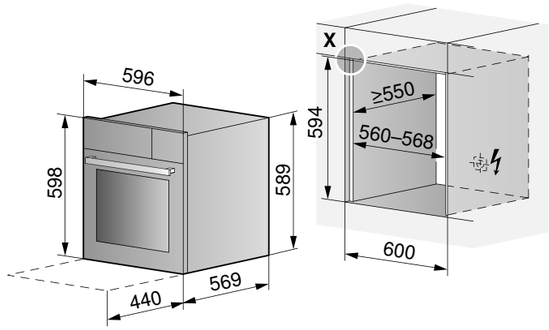

Applies to the item numbers below

2301575002

Combi-Steam XSL

Mains water connection

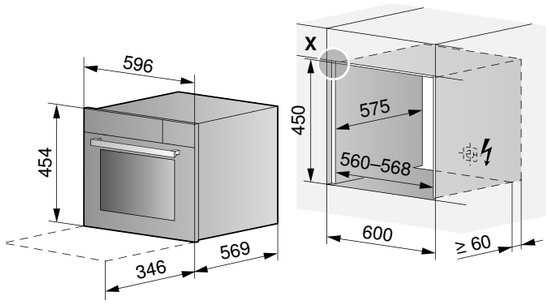

Applies to the item numbers below

2300875322
2300775002

2300675042

2300575002

Combair-Steam SL

Without drawer for under-counter installation

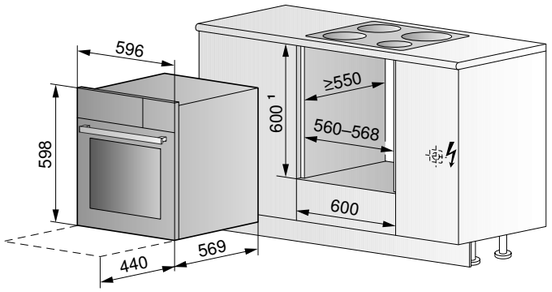

Without drawer for installation in tall units

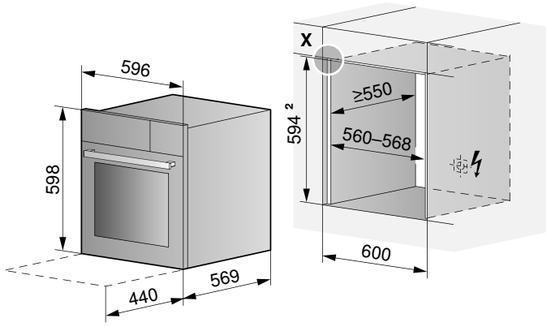

Applies to the item numbers below

2301275002

Combi-Steam HSL

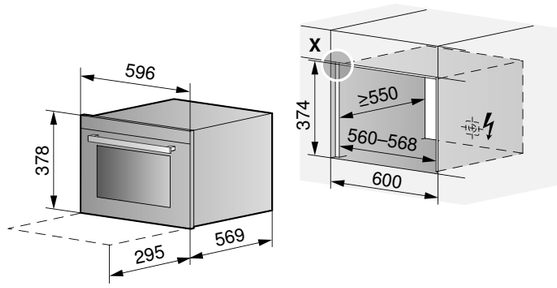

Applies to the item numbers below

2300475002

Combi-Steam accessories

1

2

3

4

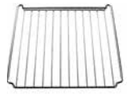

5

6/7

	Description	Item no.	Combi-Steam MSLQ*	Combi-Steam XSL	Combair-Steam SL	Combi-Steam HSL
1	"Fast steaming" recipe book	J23014017	▲ (1)			
2	"Magical steaming" recipe book	J23003923		▲ (1)	▲ (1)	▲ (1)
3	"Baking treats" recipe book	J21021923	■		■	
4	Vacuisine brochure – inspirational recipes by top chefs and everything there is to know about Vacuisine (sous-vide cooking)	1029752	■	■	■	■
5	Wire shelf, chrome-nickel steel, ⅔ GN	K43206				▲ (2)
6	Wire shelf, chrome-nickel steel, W × D: 453 × 380 mm	K44122		▲ (1)		
7	Wire shelf, chrome-nickel steel, W × D: 430 × 370 mm	K44120	▲ (1)		▲ (1)	

▲ (quantity) included as standard ■ compatible with appliance (■) position on wire shelf

* metal accessories for non-microwave use only

1

2

3

4

5

6

7

8

9

10

11

12

13/14

15

16

17

18/19

20

21/22

	Description	Item no.	Combi-Steam MSLQ*	Combi-Steam XSL	Combair-Steam SL	Combi-Steam HSL
1	Cooking tray, unperforated, ⅔ GN, height 40 mm	K42365	(■)	(■)	(■)	■
2	Cooking tray, unperforated, ⅔ GN, height 40 mm, with lip	K42366	(■)	(■)	(■)	■
3	Cooking tray, unperforated, ½ GN, height 40 mm	K50319	(■)	(■)	(■)	■
4	Cooking tray, unperforated, ½ GN, height 65 mm	K50320	(■)	(■)	(■)	■
5	Cooking tray, unperforated, ⅓ GN, height 40 mm	K23223	(■)	(■)	(■)	■
6	Cooking tray, unperforated, ⅓ GN, height 65 mm	K27358	(■)	(■)	(■)	■
7	Cooking tray, unperforated, ⅓ GN, height 100 mm	K27359	(■)	(■)	(■)	■
8	Cooking tray, perforated, ⅔ GN, height 40 mm	K42363	(■)	(■)	(■)	▲ (1)
9	Cooking tray, perforated, ⅔ GN, height 65 mm	K42367	(■)	(■)	(■)	■
10	Cooking tray, perforated, ½ GN, height 40 mm	K50327	(■)	(■)	(■)	■
11	Cooking tray, perforated, ⅓ GN, height 40 mm	K23208	(■)	(■)	(■)	■
12	Cooking tray, perforated, ⅓ GN, height 65 mm	K27357	(■)	(■)	(■)	■
13	Cooking tray, perforated, W × D × H: 452 × 380 × 28 mm	K40008		▲ (1)		
14	Cooking tray, perforated, W × D × H: 430 × 370 × 25 mm	K40011	■		▲ (1)	
15	Cooking tray, plastic, perforated, ⅓ GN, height 52 mm	K40199	▲ (1)	(■)	(■)	■
16	Stainless steel tray, unperforated, ⅔ GN, height 20 mm	K42362	(■)	■	■	▲ (1)
17	Stainless steel tray, unperforated, ⅓ GN, height 20 mm	K23224	(■)	(■)	(■)	■
18	Stainless steel tray, unperforated, W × D × H: 452 × 380 × 28 mm	K40007		▲ (1)		
19	Stainless steel tray, unperforated, W × D × H: 430 × 370 × 25 mm	K40010	▲ (1)		▲ (1)	
20	Baking tray, enamelled, ⅔ GN, height 20 mm	K43211				■
21	Baking tray, TopClean, W × D × H: 452 × 380 × 28 mm	K44005		▲ (1)		
22	Baking tray, DualEnamel, W × D × H: 430 × 370 × 25 mm	K44077	▲ (1)		▲ (1)	

▲ (quantity) included as standard ■ compatible with appliance (■) position on wire shelf

* metal accessories for non-microwave use only

1/2/3

4

5

6/7

8

9

10

11

11

	Description	Item no.	Combi-Steam MSLQ*	Combi-Steam XSL	Combair-Steam SL	Combi-Steam HSL
1	Baking tray, round, with TopClean, diameter 24 cm	K34527	(■)	(■)	(■)	(■)
2	Baking tray, round, with TopClean, diameter 29 cm	K34528	(■)	(■)	(■)	(■)
3	Baking tray, round, with TopClean, diameter 31 cm	K34529	(■)	(■)	(■)	(■)
4	Stainless steel terrine mould, u-shaped, 60 × 60 × 300 mm	K27623	■	■	■	■
5	Stainless steel terrine mould, v-shaped, 55 × 55 × 300 mm	K27624	■	■	■	■
6	Fully extending runner, 2 levels	K40210				■
7	Fully extending runner, 2 levels	K40211		■		
8	Fully extending runner, 3 levels	1045108			■	
9	Sushi blade incl. instructions	K50895	■	■	■	■
10	Oshibori hot towels, set of six	1029704	■	■	■	■
11	Sealing pads for Vacuisine with food probe, 1 × 100 cm roll	1029496	■	■	■	■
12	Durgol descaling agent	B28005	▲	▲	▲	▲
13	Angle bracket set for seamless tower installation of multiple ovens (not pictured)	K50572	■	■	■	■

▲ included as standard ■ compatible with appliance (■) position on wire shelf

* metal accessories for non-microwave use only

Combair Ovens

Our Combair oven range is the perfect compliment to a Combi-Steam or a luxury cooking appliance in its own right. With premium Swiss quality, design and innovation it will ascend your expectations for baking, roasting and grilling.

Combair Cooking - quality, quantity, control

Cooking with a V-ZUG Combair oven is familiar yet innovative. Swiss made with a large capacity, it offers all the functionality you would expect. Unique technology also provides the ability to choose a moist or dry cooking environment, helping to achieve perfect results with ultimate control.

The right operating mode at the touch of a button

Those who don't want to spend time tracking down the optimum settings will find the EasyCook function very handy – it offers access to helpful default settings for over 100 selected foods and can start the appropriate cooking programme at the touch of a button. Intuitive technology completes complex cooking sequences automatically.

Combair oven cleaning

Thanks to high quality enamel our Combair ovens are easy to clean. Choosing a pyrolytic model is an option that makes it a breeze.

Self-cleaning or assisted cleaning

Ovens with pyrolysis more or less clean themselves as pyrolitic heating reduces any dirt to ashes which can simply be wiped away with a damp cloth.

Ovens without the pyrolysis function need to be cleaned manually, but even this is very easy thanks to V-ZUG's wear-resistant Top Clean coating.

Appliances with the high-tech TopClean coating are easy to clean as residue is less likely to stick to the interior or the oven trays. In addition, as weith all V-ZUG ovens, the door can easily be removed for access to those hard to reach places when cleaning.

Product comparison Combair ovens

	Combair SLP	Combair SL	Combair SEP	Combair SE	Combair XSLP
Design					
Black mirror glass	■	■	■	■	■
Retractable handle		■*			
Interior lighting/automatic with door	■/■	■/■	■/■	■/□	■/■
Cooking space volume (l)	68	68	68	68	50
Compact oven					■
Energy efficiency rating	A	A	A	A	A
Pyrolytic self-cleaning	■		■		■
TopClean		■		■	
Exclusive V-ZUG features					
BakeOmatic with CCS	■	■			■
Climate sensor	■	■			■
Soft roasting	■	■	■	■	■
Food probe	■	■	■	■	■
Integrated cookbook recipes	■	■	■**	■**	■
Operating Modes					
Top/bottom heat	■	■	■	■	■
Hot air	■	■	■	■	■
PizzaPlus	■	■	■	■	■
Grill/Convection grill	■	■	■	■	■
Fast heating	■	■	■	■	■
Plate warming	■	■	■	■	■
Keep warm	■	■	■	■	■
Rotisserie	■	■			
Operation and display					
Full-colour graphic display (10 languages)	■	■			■
Graphic display (10 languages)			■	■	
Time display/timer function	■/■	■/■	■/■	■/■	■/■

■ = featured * optional ** recipes can be activated after purchasing the cookbook "Baking treats"

Combair Ovens

Combair SLP

Our luxury oven with all the trimmings. Traditional functionality plus our unique Climate Control system with BakeOMatic, rotisserie spit and pyrolytic cleaning.

Operating modes

Operation and display

- Climate control system
- Full-colour graphic display
- TouchControl and adjusting knob
- Electronic clock timer
- Timer function
- Number of languages in display 10
- Recipe book included
- Pyrolytic cleaning

Appliance information

Appliance size	598 × 596 × 569 mm		
Connection	220-240 V~	3400 W	16 A

Version	Item number	RRP
Black mirror glass		
Fixed Handle	2106265002	**$7,499**

Combair SL

Our luxury oven combining traditional functionality plus our unique Climate Control system with BakeOMatic and retractable handle.

Operating modes

Operation and display

- Climate control system
- Full-colour graphic display
- TouchControl and adjusting knob
- Electronic clock timer
- Timer function
- Number of languages in display 10
- Recipe book included
- TopClean

Appliance information

Appliance size	598 × 596 × 569 mm		
Connection	220-240 V~	3400 W	16 A

Version	Item numbe	RRP
Black mirror glass		
Retractable handle	2106165042	**$5,999**

Combair SE/P

A popular model that practically cleans itself – ideal when combined with a Combi-Steam cooker.

Operating modes

Operation and display

- Monochrome graphic display
- TouchControl and adjusting knob
- Electronic clock timer
- Timer function
- Number of languages in display 10
- Recipe book optional
- TopClean (SE) or Pyrolytic cleaning (SEP)

Appliance information

Appliance size	598 × 596 × 569 mm		
Connection	220-240 V~	3400 W	16 A

Version	Item number	RRP
Black mirror glass		
Pyrolytic		
Fixed Handle	2106065002	**$3,999**
Non-Pyrolytic		
Fixed Handle	2101665002	**$2,999**

Combair XSLP

The ideal addition to a Combi-Steamer – with a compact design and practical self-cleaning.

Operating modes

Operation and display

- Climate control system
- Full-colour graphic display
- TouchControl and adjusting knob
- Electronic clock timer
- Timer function
- Number of languages in display 10
- Recipe book included

Appliance information

Appliance size	454 × 596 × 569 mm		
Connection	220-240 V~	3300 W	16 A

Version	Item number	RRP
Black mirror glass		
Fixed Handle	2106365002	**$5,899**

Dimensions

Combair SLP, SL, SEP, SE

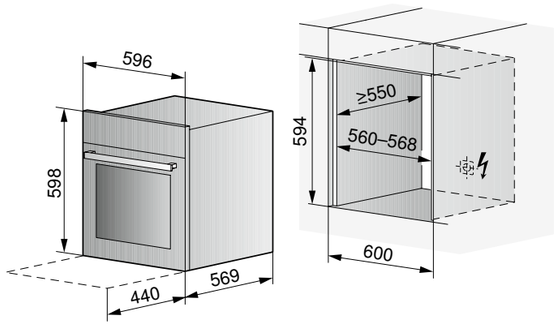

Applies to the item numbers below

SLP	SEP
2106265002	2106065002
SL	SE
2106165042	2101665002

Combair XSLP

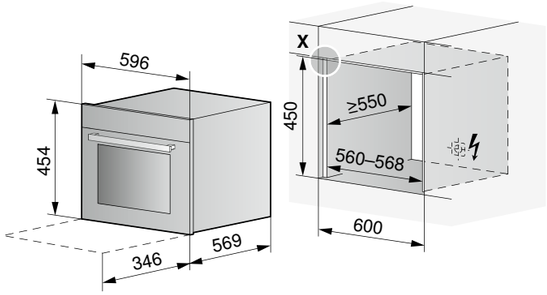

Applies to the item numbers below

2106365002

Combair oven accessories

1

2

3

4/5/6

7/8

	Description	Item no.	Combair SLP	Combair SL	Combair SEP	Combair SE	Combair XSLP
1	"Baking treats" recipe book	J21021.014	▲ (1)	▲ (1)	■	■	▲ (1)
2	Baking tray with TopClean	K44005	▲ (2)	▲ (2)	▲ (2)	▲ (2)	▲ (2)
3	Wire shelf	K44102	▲ (1)	▲ (1)	▲ (1)	▲ (1)	▲ (1)
4	Baking tray, round, with TopClean, diameter 24 cm	K34527	■	■	■	■	■
5	Baking tray, round, with TopClean, diameter 29 cm	K34528	■	■	■	■	■
6	Baking tray, round, with TopClean, diameter 31 cm	K34529	■	■	■	■	■
7	Fully extending runner, 3 levels	K40207	■	■	■	■	
8	Fully extending runner, 3 levels	K40208					■
9	Angle bracket set for seamless tower installation of multiple ovens (not pictured)	K50572	■	■	■	■	■

▲ (quantity) included as standard ■ compatible with appliance

You can find more detailed information at **vzug.com**

Vacuum and Warming Drawers - complimentary, practical, convenient

Adding another layer of luxury to your kitchen story, these options are practical and convenient; whether its a vacuum drawer to prepare, seal and store or a warming drawer to temper cups, plates or your prepared dishes before serving.

Amateur cooks who appreciate convenience in the kitchen and enjoy life's extra little luxuriess will love our vacuum and warming drawers. Depending on your design these beauties can be seamlessly integrated to match your joinery or featured with our signature Black mirror glass finish.

The vacuum drawer is the perfect compliment to our Combi-Steam bringing the world of sous vide style cooking into your home kitchen alongside our Vacuisine function. The technique of sealing food and flavour inside a bag and cooking gently with steam creates exquisite flavour and texture.

In addition, sealing and storing food without air protects it from bacteria and deterioration ensuring longer lasting freshness and quality. Sealed food can also be easily arranged to save space in your pantry, fridge or freezer for the ultimate in organisation.

Warming drawers can be installed to partner a Combi-Steam, Combair oven or Coffee Centre. They are also brilliant under a cooktop or in an island bench to help ensure you are always ready to serve on perfectly warmed plates. Making your coffee each morning in your tempered cup is always a joy. When it comes to complimenting the cooking process, a warming drawer will store your cooked dishes until the time is right and can also be used to cook at low temperatures if desired.

Warming Drawer highlights

V-ZUG's warming drawers feature an optimized heating concept and practical touch controls. Thanks to their telescopic runners, there is space for a six-person place setting, should you need it. Interior LED lighting ensures excellent visibility and efficiency. The smooth, high quality, interior surfaces ensure it is easy to clean and maintain.

Ingenious everyday functions

If desired, anyone who regularly defrosts frozen food can input the time and heat level and save their most frequently used settings under their favourites. Even tortillas can be heated up quickly to precisely the right temperature while coffee aficionados will appreciate pouring their coffee into a pre-warmed cup.

Ideal for dinner party hosts

Perfect hosts serve their dishes on pre-warmed plates. But the warming drawer can additionally be used to finish off meat too. Simply sear the meat to brown it, place it in a covered dish and allow it to gradually continue cooking to perfection in the drawer before serving.

Vacuum Drawer highlights

Exclusive vacuum-sealing technology for the home

Sealing meals in a vacuum bag prevents the ingredients reacting with the ambient air and ensures that the safety of the food is not adversely affected by moisture in the air. As a result, the quality of the food is maintained for up to five times longer, while vitamins, minerals, flavours and colours are preserved.

For everyday use or for that perfect dinner

A vacuum drawer has a wide variety of uses. For example, you can blanch vegetables from your garden or make them into soup, then vacuum-seal them in suitably sized portions and store them for a considerable time with no loss in quality. Larger quantities of meat can also be portioned ready for storage. Even preserving and jam jars can be vacuum-sealed in the drawer, and with the accessory set for external containers, you can also preserve pressure-sensitive foodstuffs and bottled items.

Vacuum-sealing food in bags is also the first step to prepare for Vacuisine – precisely temperature-controlled sous-vide cooking in a Combi-Steamer.

Three settings

Unlike most free-standing appliances, the entire chamber is placed under vacuum in this drawer, allowing liquids such as soups or sauces, and also foods with a high liquid content, to be vacuum-sealed. The appliance offers three settings – a low setting for liquids and fruit, a medium one for fish and vegetables, and the highest setting for meat and frozen food.

Vacuum and Warming Drawers

Warming drawer

An additional appliance for keeping food hot and warming plates, 283 mm high.

Operating modes

Operation and display

- Capacity for crockery 20
- Capacity for plates 40
- TouchControl
- Electronic temperature control
- Number of temperature levels 6
- Temperature range 30 – 80 °C
- Glass heating plate
- Indoor light
- Sabbath mode
- Push/pull
- Stainless steel interior
- FunctionLight
- Wire shelf

Appliance information

Appliance size	281 × 596 × 547 mm		
Connection	220-240V~	810 W	10 A

Version	Item number	RRP
Black mirror glass	3402060022	**$2,399**

Warming drawer

An additional appliance for keeping food hot and warming plates, 220 mm high.

Operating modes

Operation and display

- Capacity for crockery 15
- Capacity for plates 30
- TouchControl
- Electronic temperature control
- Number of temperature levels 6
- Temperature range 30 – 80 °C
- Glass heating plate
- Indoor light
- Sabbath mode
- Push/pull
- Stainless steel interior
- FunctionLight

Appliance information

Appliance size	218 × 596 × 547 mm		
Connection	220-240V~	810 W	10 A

Version	Item number	RRP
Black mirror glass	3401960022	**$2,199**

Warming drawer

A very popular model and the perfect partner for the Combi-Steam cooker. Also available with an integrated front to match kitchen cabinetry. 144mm high.

Operating modes

Operation and display

- Capacity for crockery 6
- Capacity for plates 14
- TouchControl
- Electronic temperature control
- Number of temperature levels 6
- Temperature range 30 – 80 °C
- Glass heating plate
- Indoor light
- Sabbath mode
- Push/pull
- Stainless steel interior
- FunctionLight

Appliance information

Appliance size	142 × 596 × 547 mm		
Connection	220-240V~	810 W	10 A

Version	Item number	RRP
Black mirror glass	3401760022	**$1,999**
Fully integrated	3402260025	**$1,999**

Vacuum drawer

A perfect addition to the Combi-Steam XSL, offering vacuum sealing with three different settings. 144mm high.

Operation and display

- Vacuum-sealing levels 3
- Vacuum-sealing levels for external vacuum-sealing 3
- Suitable for liquids
- Fully extendable telescopic drawer
- Push/pull
- TouchControl
- Stainless steel interior
- Bag support
- Interior dimensions (H × W × D): 95 × 350 × 285 mm

Appliance information

Appliance size	142 × 596 × 547 mm		
Connection	220-240 V~	320 W	10 A

Version	Item number	RRP
Black mirror glass	3600160022	**$4,499**
Fully integrated	3600360025	**$4,499**

Dimensions

Vacuum drawer

Individual installation – mirror glass

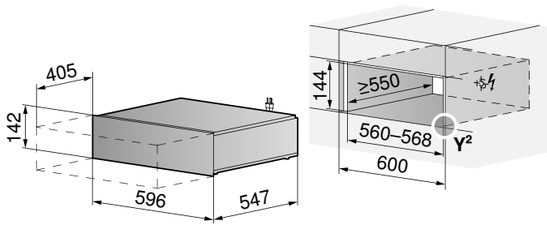

Applies to the item numbers below

3600100022
3600300025

Fully integrated

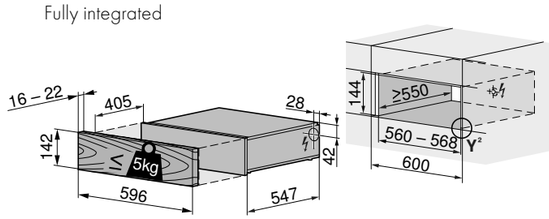

Warming drawer

Individual installation – mirror glass

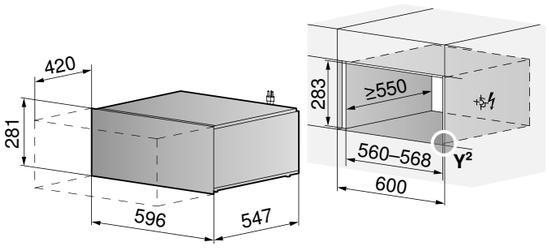

Applies to the item numbers below

3402000022

Warming drawer

Individual installation – mirror glass

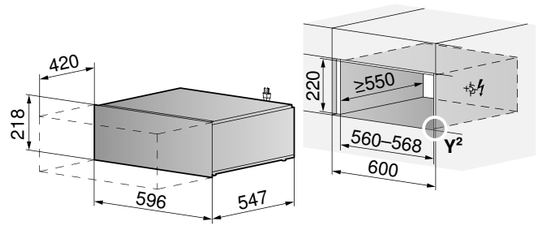

Applies to the item numbers below

3401900022

Warming drawer

Individual installation – mirror glass

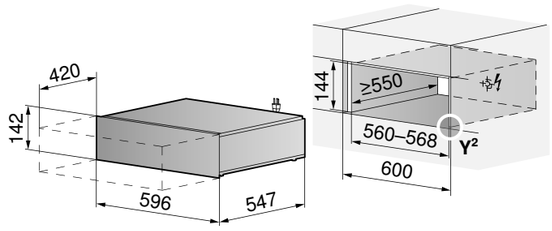

Applies to the item numbers below

3401700022
3402200025

Fully integrated

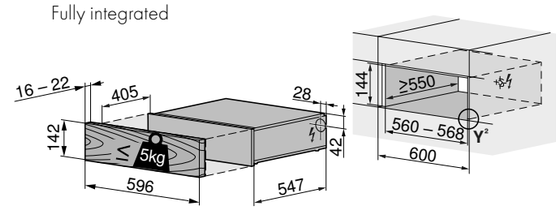

You can find more detailed information at **vzug.com**

Vacuum and Warming Drawer accessories

1/2

3

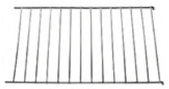

4

5

	Description	Item no.	Vacuum drawer 144	Warming drawer 283	Warming drawer 220	Warming drawer 144
1	Vacuum bags, 50 pcs, 180 × 280 mm	1012506	▲(1)			
2	Vacuum bags, 50 pcs, 240 × 350 mm	1012507	▲(1)			
3	Sealing pads for Vacuisine with food probe, 1 x 100 cm roll	1029496	■			
4	Wire shelf for warming drawers 283 and 312	1045990		▲(1)		
5	Vacuisine brochure – inspiring recipes by top chefs and everything there is to know about Vacuisine (sous-vide cooking)	1029752	■			

▲ (quantity) included as standard ■ compatible with appliance * Ovens should not be installed directly on top of a Vacuum or Warming Drawer.

Coffee Centre - grind, brew, enjoy

The Coffee-Center is a fully automatic machine that lets aficionados enjoy a cafe quality brew in their own home at the touch of a button.

The Supremo XSL Coffee-Center will delight with its high-quality grinder and the perfect pressure for a fine brew. Five pre-set coffee strengths from extra mild to very strong plus five cup sizes allow you to make coffee exactly the way you like it. The coffee temperature can also be set individually. Up to six personalised profiles can be saved and recalled at the touch of a button so everyone in the household can make coffee according to their own taste. An intuitive full graphic display makes operation really simple.

From regular coffee, ristretto, espresso, espresso macchiato, doppio, cappuccino, flat white, caffe latte, macchiato – the Coffee-Center offers coffee lovers whatever their hearts desire. The size and strength of all specialities can be personalized and saved as a favourite.

Three types of froth

The built-in milk frother automatically produces three levels of foam for cappuccinos, macchiatos or caffe lattes. The thermal milk container of the Supremo XSL is double-walled to keep milk fresh for a long time. Alternatively, it can also be removed and kept in the fridge.

Automatic cleaning programme

An automatic cleaning and descaling programme keeps the Coffee-Center clean without any manual intervention. The inner part of the thermal milk container can be cleaned in the dishwasher. On pressing the cleaning button, the machine automatically cleans the milk-frothing pipes.

Coffee Centre

Supremo XSL

The modern Coffee-Center fits perfectly into your kitchen and lets you enjoy your coffee just the way you like it.

Operating modes

Operation and display

- Additional coffee styles:
  - Ristretto
  - Doppio
  - Long
  - Americano
  - Espresso macchiato
  - Flat white
- Full-colour graphic display, touchscreen
- TouchControl
- 6 user profiles
- Telescopic rails soft closing/opening
- Adjustable grinder setting levels 13
- Programmable brewing temperature
- Integrated cleaning programme
- User-controlled descaling
- Water tank 2.3 l
- Coffee bean holder capacity 350 g
- Waste grounds container capacity 14
- Lighting LED
- Powder / beans selection button

Appliance information

Appliance size	454 × 596 × 480 mm		
Connection	220-240V~	1350 W	10 A

64 kWh/a

Version	Item number	RRP
Black mirror glass	2500467002	**$5,999**

Dimensions

Supremo XSL

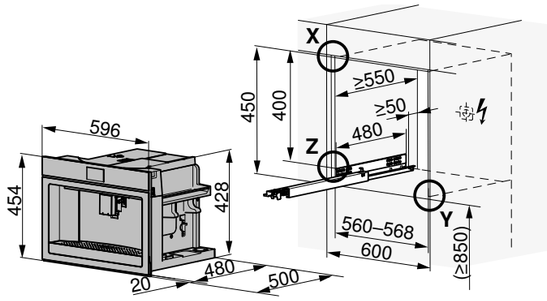

Applies to the item numbers below

Supremo XSL

2500467002

Coffee-Centre accessories

1

	Description	Item no.	Supremo XSL
1	EcoDecalk Mini, 2 × 100 ml	1058960	■

■ compatible with appliance

Cooktops

Technology and stunning design in gas or induction for the ultimate in cooking enjoyment and inspiration.

An option to suit every kitchen

Our comprehensive range offers a variety of cooktops featuring modern induction technology or the familiarity of gas..

Induction

By directly transferring energy to the base of the saucepan, food not only heats up in record time on an induction cooktop, it also consumes a minimal amount of energy. A litre of water can be brought to the boil in around two minutes, representing an energy saving of up to 30%. This technology also has the advantage that heat is only generated at the base of the pan, not under the glass surrounding the cooking zone. So virtually nothing can get burnt, and the cooktop can be wiped clean simply with a damp cloth. A further advantage is that it minimizes the risk of children burning their hands.

FullFlex

Those that want even more flexibility will go for the FullFlex induction cooktop. This cooktop does away with cooking zones altogether. Instead, up to 48 state-of-the-art inductors enable it to automatically detect the position and size of the cookware being used. This means you can have up to six pans at a time anywhere on the cooking surface. Thanks to the memory function, you can even move them around without losing their settings. The new FullFlex induction cooktops are easy to control from a full-colour graphic touchscreen that clearly displays all the information needed.

Downdraft

Anyone who appreciates both flexibility and headroom will benefit from a Fusion cooktop. This cooktop features an integrated downdraft extractor close to the pots and pans that directly draws the steam away downwards. With its elegant understated design and OptiLink functionality, the Fusion cooktop is a truly impressive appliance.

Gas

V-ZUG offers gas cooktops with several modern slider controls for the direct, straightforward and ergonomic operation of the various cooking zones. As is standard practice for gas cooktops, V-ZUG's designers have paid special attention to safety aspects; all of our gas cooktops are equipped with various safety mechanisms to keep you safe while you're cooking with gas. Our gas cooktops offer stunning control from very low to very high heat. In addition, perform everyday functions with ease using the automated Melt, Keep Warm and Simmer functions.

Cooktops for the future

Cooking has never been so easy: thanks to OptiLink, the range hood communicates with the cooktop and automatically adjusts the extraction rate depending on the current cooking activity.

Induction technology is leading the way

The benefits of induction technology are winning over more and more users, while at the same time there is a growing demand for switching from conventional to induction cooktops in houses for rent.

Connected kitchen appliances

OptiLink makes cooking even more straightforward: the range hood communicates with the cooktop and adjusts the extraction rate depending on the current cooking activity, all completely automatically.

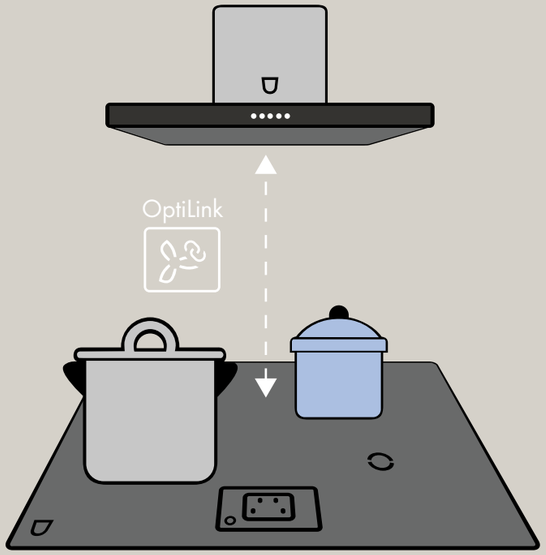

Automatic regulation

By exchanging information, the range hood and cooktop ensure that the extraction rate is automatically adjusted depending on the current cooking activity. This assures optimal air quality without the need for any manual intervention. Energy consumption is then also precisely matched to the level of cooking activity.

Designed for every kitchen

DualDesign: both seamless and practical integration

All cooktops are DualDesign. This means the same cooktop can either be flush-fitted or surface-mounted. The surface-mounted version has a slimline yet robust glass edge. The flush-fitting version, on the other hand, can be integrated in any worktop to provide a smooth unbroken surface. So one and the same appliance design can be used for the two forms of installation.

OptiGlass: particularly durable

Beautifully designed and particularly robust – this is what sets OptiGlass cooktops apart. An extremely tough coating ensures that this cooktop is more scratch-resistant than conventional cooktops, and will stay new-looking for longer. Thanks to the mirror glass design, the appliances in this line fit in perfectly with the other kitchen appliances. OptiGlass is available on selected cooktops.

DualDesign (surface-mounted version)

DualDesign (flush-fitting version)

Slide Control or Touchscreen

After choosing the type of cooktop, the next step is to decide on the type of controls, design option and installation variant.

Slide Control

Responsive and intuitive, the slide control in either single or multi options, adjusts your cooking temperature perfectly. The graphic display is clear and simple to read for ultimate ease of use.

Touchscreen

The full colour touchscreen offers access to all of your programs and settings in one graphic display. A perfect combination of design and functionality.

Individual slide control

Full-colour touchscreen

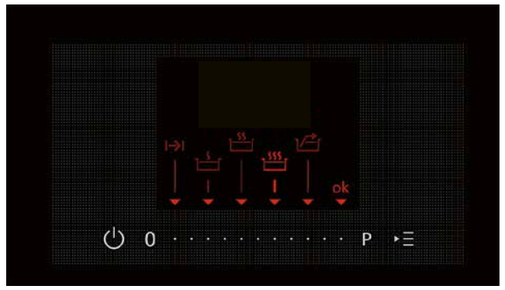

Single slide control

Product comparison
Induction cooktops

	CookTopInduction V6000 FullFlex	CookTopInduction V6000	CookTopInduction Panoramic	CookTopInduction Fusion		CookTopInduction V6000 FullFlex	CookTopInduction V4000	CookTopInduction V4000	Teppankyaki Plate	CookTopInduction Wok	CookTopInduction 2 Zone
Width in cm	90			80		70		60	40		
Versions											
DualDesign (surface-mounted or flush-fitting)	■	■	■	■		■	■	■	■	■	■
OptiGlass		■		■			■	■			
Modes											
Number of cooking zones	6	5	4	4		5	4	4	2	1	2
Number of PowerPlus zones	6	5	4	4		5	4	4		1	2
Bridging		■						■	■		■
Operation/care											
Individual slide control		■	■				■	■	■	■	■
Single slide control	■			■		■					
Full-colour touchscreen	■					■					
Touch graphic display				■							
OptiLink		■		■			■	■			
GuidedCooking		■					■	■			
Timer	■	■	■	■		■	■	■	■	■	■
Safety auto switch off	■	■	■	■		■	■	■	■	■	■
Pause function	■	■	■	■		■	■	■	■	■	■
Automatic boost		■	■	■			■	■			■
Simmer function	■	■	■	■		■	■	■		■	■
Wipe protection function	■	■	■	■		■	■	■	■	■	■
Restore function	■	■	■	■		■	■	■	■	■	■
Keep warm setting	■	■	■	■		■	■	■		■	■
Childproof lock	■	■	■	■		■	■	■	■	■	■

■ = featured

Induction Cooktops

CookTopInduction V6000 FullFlex

Versatile cooktop with full colour touchscreen and 48 inductors allowing for optimal placement of up to 6 pots and pans anywhere on the cooking surface.

Operating modes

Operation and display

- Max. power cooking zone 11100 W
- Flexible cooktop
- Max. number of cookware 6
- Pan detection from 10 cm
- Power levels 18
- Safety package
- Full-colour graphic display, touchscreen
- Slider control
- Teppankyaki plate included

Appliance information

Appliance size	897 × 501 mm/R1.5		
Connection	220-240V~	11100 W	48 A

Version	Item number	RRP
90 cm		
DualDesign	3113400004	**$9,999**

reddot award 2019 winner

PLUS X AWARD 2019/2013 Achieved for: Innovation, High Quality, Design, Ease of Use, Functionality

CookTopInduction V6000 5 Zone

A truly powerful cooktop with simple direct selection buttons and innovative connectivity.

Operating modes

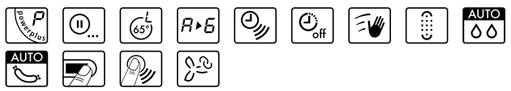

Operation and display

- Max. power per cooking zone 3700 W
- Cooking zones 5
- Pan detection (10 – 22 cm)
- Power levels 9
- Safety package
- Digital display
- MultiSlider/direct selection
- OptiLink ready

Appliance information

Appliance size	897 × 501 mm/R1.5		
Connection	220-240V~	11100 W	48 A

Version	Item number	RRP
90 cm		
DualDesign	3111400009	**$5,499**

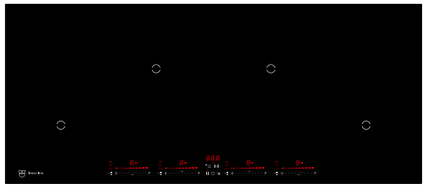

CookTopInduction Panoramic

A powerful panorama cooktop with multi-slider control – as attractive as it is practical.

Operating modes

Operation and display

- Max. power per cooking zone 3700 W
- Cooking zones 4
- Pan detection (10 – 22 cm)
- Power levels 9
- Safety package
- Digital display
- MultiSlider/direct selection

Appliance information

Appliance size	880 × 380 mm/R1.5		
Connection	230 V~	7400 W	32 A

Version	Item number	RRP
90 cm		
DualDesign	3107965405	**$4,799**

CookTopInduction Fusion

This ingenious extractor is integrated into the cooktop and draws vapour in a downwards direction.

Cooktop operating modes

Extraction operating modes

Operation and display

- Extraction rate on intensive setting: 583 m^3/h
- Air output according to EN 61591
- 500 ml removable drip tray with integral grease filter, dishwasher-safe
- Pan detection (10 – 22 cm)
- Touchscreen graphic display in 9 languages
- Single slider
- Cooktop power with PowerPlus 2 × 3000 W, 1 × 3500 W, 1 × 3700 W

Appliance information

Appliance size	761 × 501 mm/R1.5		
Connection	230 V~	7400 W	32 A

Version	Item number	RRP
80 cm		
DualDesign	3109465415	**$5,899**

Extras for recirculation mode

Recirculation box for base area with activated charcoal filter package approx. 3.5 years maintenance-free 1012161

iF DESIGN AWARD 2019

reddot award 2019 winner

PLUS X AWARD 2019/2013 Achieved for: High Quality, Design, Ease of Use, Functionality

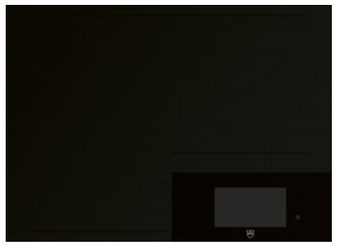

CookTopInduction V6000 FullFlex

Versatile cooktop with full colour touchscreen and 36 inductors allowing for optimal placement of up to 5 pots and pans anywhere on the cooking surface..

Operating modes

Operation and display

- Max. power cooking zone 7400 W
- Flexible cooktop
- Max. number of cookware 5
- Pan detection from 10 cm
- Power levels 18
- Safety package
- Full-colour graphic display, touchscreen
- Slider control
- Teppanyaki plate included

Appliance information

Appliance size	691 × 501 mm/R1.5		
Connection	220-240V~	7400 W	32 A

Version	Item number	RRP
70 cm		
DualDesign	3113200004	**$6,999**

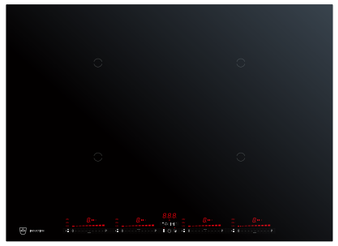

CookTopInduction V4000 4 Zone

Outstanding in everything that counts: performance, multi-slider controls and connectivity.

Operating modes

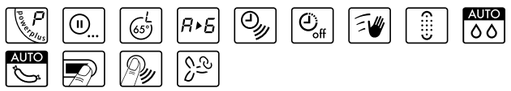

Operation and display

- Max. power per cooking zone 3700 W
- Cooking zones 4
- Pan detection (10 – 22 cm)
- Power levels 9
- Safety package
- Digital display
- MultiSlider/direct selection
- OptiLink ready

Appliance information

Appliance size	691 × 501 mm/R1.5		
Connection	220-240V~	7400 W	32 A

Version	Item number	RRP
70 cm		
DualDesign	3111600007	**$3,899**

CookTopInduction V4000 4 Zone Compact

Our powerful compact 4 zone cooktop.

Operating modes

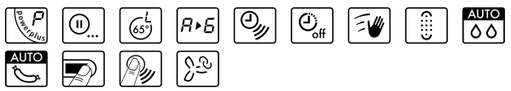

Operation and display

- Max. power per cooking zone 3700 W
- Cooking zones 4
- Pan detection (10 – 22 cm)
- Power levels 9
- Safety package
- Digital display
- MultiSlider/direct selection
- OptiLink ready

Appliance information

Appliance size	571 × 501 mm/R1.5		
Connection	220-240V~	7400 W	32 A

Version	Item number	RRP
60 cm		
DualDesign	3111500011	**$3,499**

Teppanyaki Plate

The compact teppanyaki cooktop uses induction and is ideal for cooking meat and fish with little fat.

Operating modes

Operation and display

- Max. power per cooking zone 1400 W
- Cooking zones 2
- Power levels 9
- Safety package
- Digital display
- MultiSlider/direct selection
- 2 spatulas and cloche included

Appliance information

Appliance size	384 × 501 mm/R1.5		
Connection	220-240V~	2800 W	16 A

Version	Item number	RRP
40 cm		
DualDesign	3107660205	**$4,999**

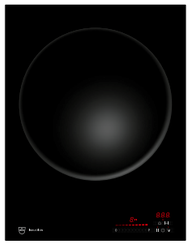

CookTopInduction Wok

An induction wok for quick and gently cooked meals.

Operating modes

Operation and display

- Max. power per cooking zone 3000 W
- Cooking zones 1
- Power levels 9
- Safety package
- Digital display
- Slider control
- Professional stainless steel wok and accessories included

Appliance information

Appliance size	384 × 501 mm/R1.5		
Connection	220-240V~	3000 W	16 A

Version	Item number	RRP
40 cm		
DualDesign	3108860105	**$4,999**

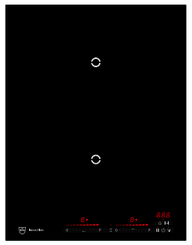

CookTopInduction 2 Zone

This cooktop offers powerful induction technology, even in small areas.

Operating modes

Operation and display

- Max. power per cooking zone 3700 W
- Cooking zones 2
- Pan detection (10 – 22 cm)
- Power levels 9
- Safety package
- Digital display
- MultiSlider/direct selection

Appliance information

Appliance size	384 × 501 mm/R1.5		
Connection	220-240V~	3700 W	16 A

Version	Item number	RRP
40 cm		
DualDesign	3108560205	**$2,999**

Dimensions

CookTopInduction V6000 FullFlex – standard width 90 cm

Surface-mounted installation with "DualDesign"

- Aim to keep corner radius of the cut-out to ≤5 mm
- Appliance corner radius 1.5 mm

Flush installation with "DualDesign"

- The cooktop must be removable from below

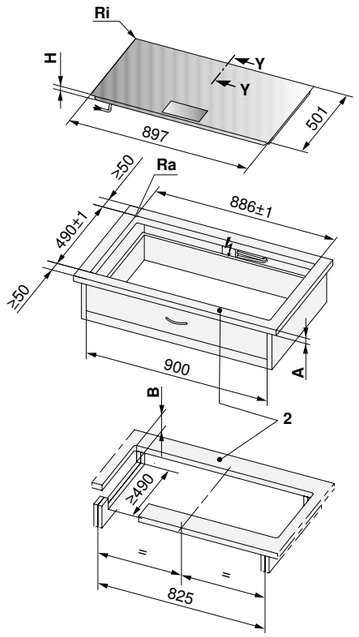

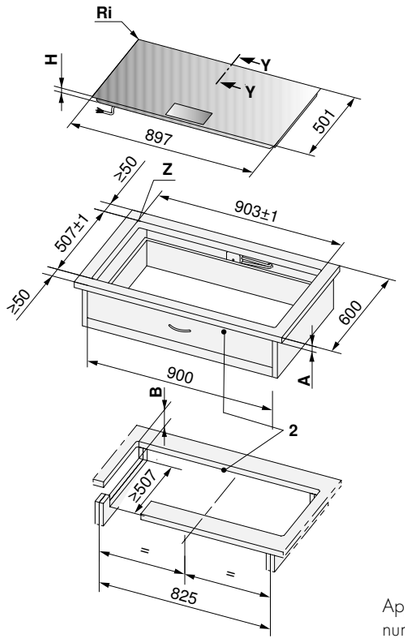

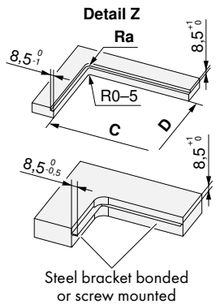

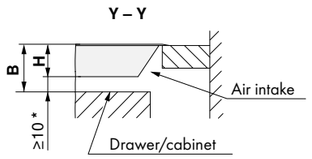

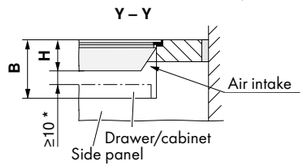

Applies to the item numbers below

CTI V6000 FullFlex

3113400004

* The clearance space must be maintained.

2 The front and rear pegs are reinforced underneath. The strut width is determined by the producer of the stone worktop. The minimum peg width can vary according to the properties of the stone.

Type	A – loosely based on manufacturer	B	C/D	H	Corner radius Ra/Ri
CookTopInduction V6000 FullFlex Surface-mounted installation with "DualDesign"	≤40 mm	≥82 mm		72 mm	5/1.5 mm
CookTopInduction V6000 FullFlex Flush installation with "DualDesign"	≤40 mm	≥150 mm	886/490 mm	76 mm	5/1.5 mm

A Worktop thickness
B Required clearance space in the service exchange over the entire cut-out surface
H Measurement from the top side of the worktop to the underside of the cooktop
Ri Appliance corner radius
Ra External corner radius of the cut-out

You can find more detailed information at **vzug.com**

CookTopInduction V6000 – standard width 90 cm

Surface-mounted installation with "DualDesign"

- Aim to keep corner radius of the cut-out to ≤5 mm
- Appliance corner radius 1.5 mm

Flush installation with "DualDesign"

- The cooktop must be removable from below

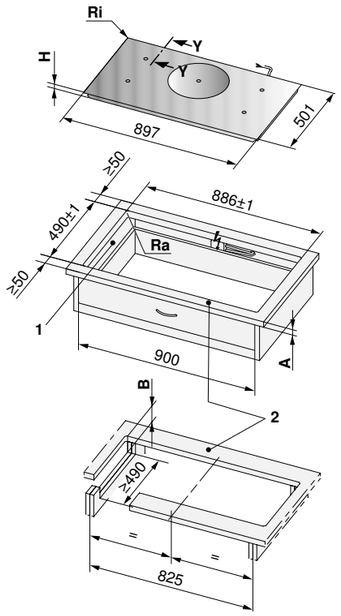

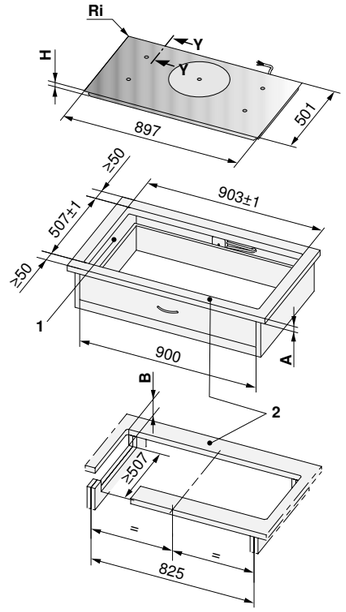

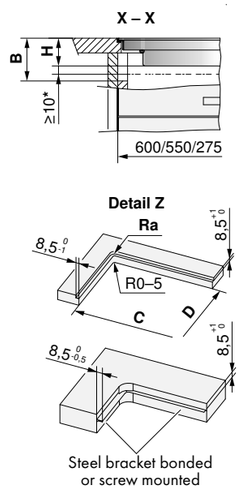

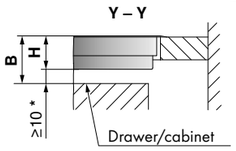

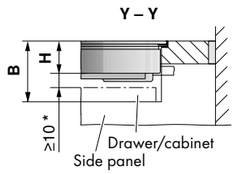

Applies to the item numbers below

CookTopInduction V6000

3111400009

* The clearance space must be maintained.

1 Cut-outs in left/right side panels for a niche width of 900 mm, required for appliance ventilation.

2 The front and rear pegs are reinforced underneath. The strut width is determined by the producer of the stone worktop. The minimum peg width can vary according to the properties of the stone.

Type	A – loosely based on manufacturer	B	C/D	H	Corner radius Ra/Ri
CookTopInduction V6000 Surface-mounted installation with "DualDesign"	≥20 mm	≥75 mm		53.3 mm	5/1.5 mm
CookTopInduction V6000 Flush installation with "DualDesign"	≥20 mm	≥75 mm	886/490 mm	53.3 mm	5/1.5 mm

A Worktop thickness (in combination with oven installed directly below, not applicable to small appliances)
B Required clearance space for ventilation and service exchange over the entire cut-out surface
H Measurement from the top side of the worktop to the underside of the cooktop (ventilation opening)
Ri Appliance corner radius
Ra External corner radius of the cut-out

You can find more detailed information at **vzug.com**

CookTopInduction Panoramic – standard width 90 cm

Surface-mounted installation with "DualDesign"

- Aim to keep corner radius of the cut-out to ≤5 mm
- Appliance corner radius 1.5 mm

Flush installation with "DualDesign"

- The cooktop must be removable from below

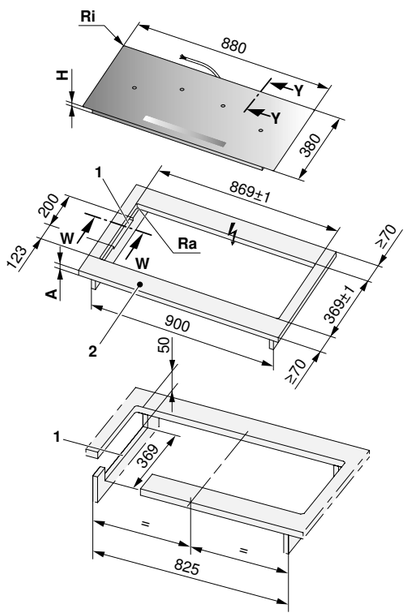

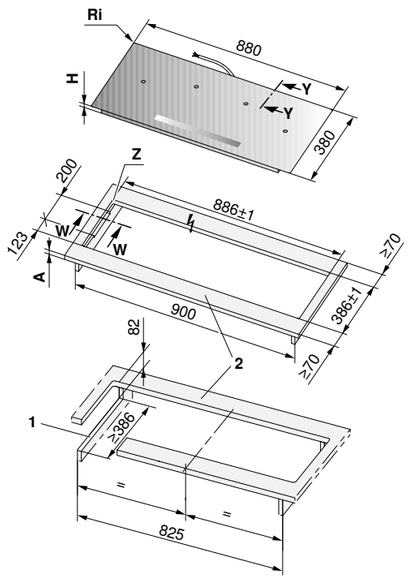

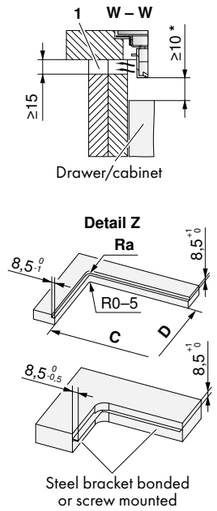

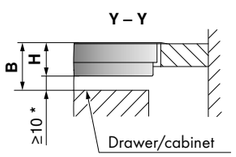

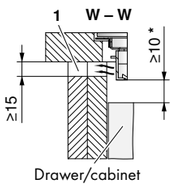

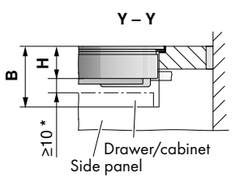

Applies to the item numbers below

GK47TIMPS

3107965405

* The clearance space must be maintained.

1 Cut-outs in left/right side panels for a niche width of 900 mm, required for appliance ventilation.

2 The front and rear pegs are reinforced underneath. The strut width is determined by the producer of the stone worktop. The minimum peg width can vary according to the properties of the stone.

Type	A – loosely based on manufacturer	B	C/D	H	Corner radius Ra/Ri
GK47TIMPS Surface-mounted installation with "DualDesign"	≥20 mm	≥61 mm		51 mm	5/1.5 mm
GK47TIMPS Flush installation with "DualDesign"	≥20 mm	≥75 mm	869/396 mm	51 mm	5/1.5 mm

A Worktop thickness (in combination with oven installed directly below, not applicable to small appliances)
B Required clearance space for ventilation and service exchange over the entire cut-out surface
H Measurement from the top side of the worktop to the underside of the cooktop (ventilation opening)
Ri Appliance corner radius
Ra External corner radius of the cut-out

CookTopInduction Fusion

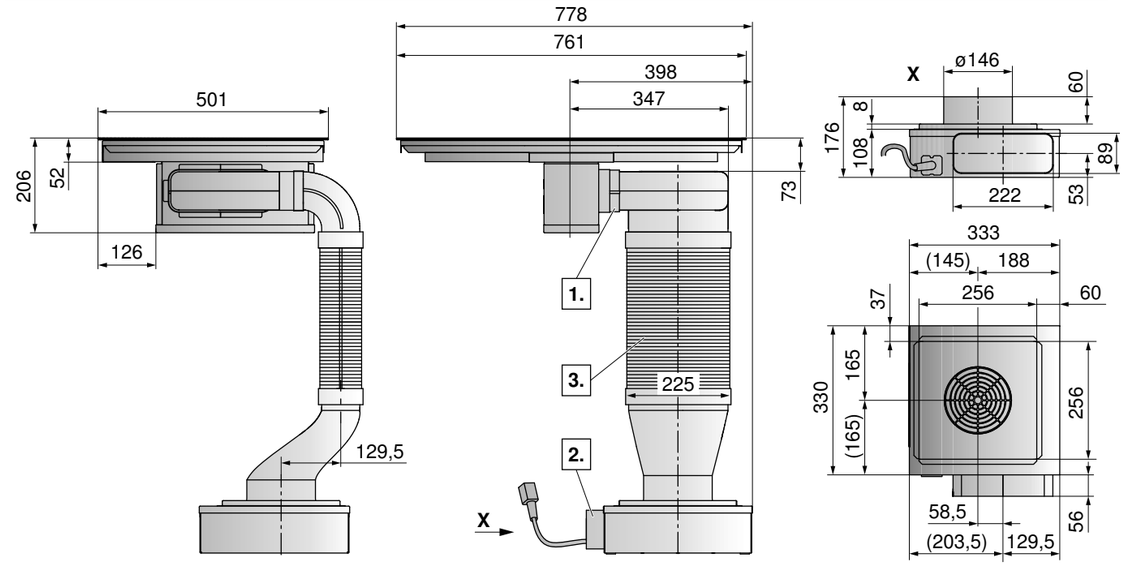

1. The air duct can be placed on the left or right.
2. The fan motor can be rotated – this will change the installation situation.
3. Depending on space requirements, the position of the fan motor can be adjusted flexibly by shortening the flat duct.

Applies to the item numbers below

GKD46TIMASZO-FUSION

3109465415
1012161

CookTopInduction V6000 FullFlex– standard width 70 cm

Surface-mounted installation with "DualDesign"

- Aim to keep corner radius of the cut-out to ≤5 mm
- Appliance corner radius 1.5 mm

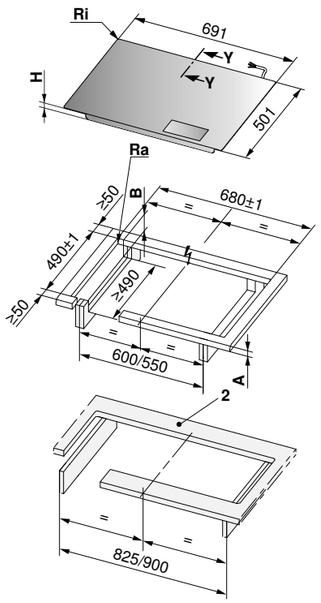

Flush installation with "DualDesign"

- The cooktop must be removable from below

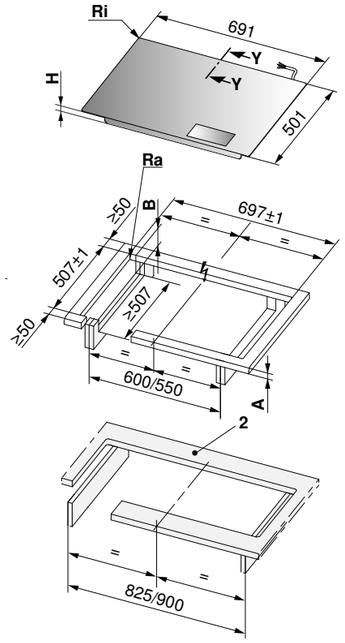

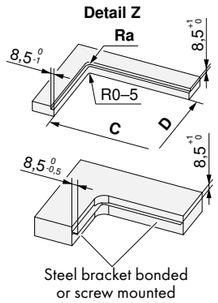

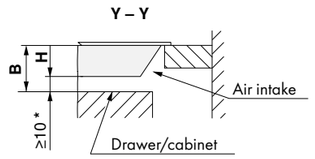

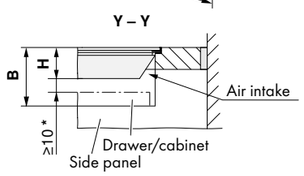

Applies to the item numbers below

CTI V6000 FullFlex

3113200004

* The clearance space must be maintained.

2 The front and rear pegs are reinforced underneath. The strut width is determined by the producer of the stone worktop. The minimum peg width can vary according to the properties of the stone.

Type	A – loosely based on manufacturer	B	C/D	H	Corner radius Ra/Ri
CookTopInduction V6000 FullFlex Surface-mounted installation with "DualDesign"	≤40 mm	≥82 mm		72 mm	5/1.5 mm
CookTopInduction V6000 FullFlex Flush installation with "DualDesign"	≤40 mm	≥150 mm	680/490 mm	76 mm	5/1.5 mm

A Worktop thickness
B Required clearance space in the service exchange over the entire cut-out surface
H Measurement from the top side of the worktop to the underside of the cooktop
Ri Appliance corner radius
Ra External corner radius of the cut-out

You can find more detailed information at **vzug.com**

CookTopInduction V4000 – standard width 70 cm

Surface-mounted installation with "DualDesign"

- Aim to keep corner radius of the cut-out to =≤5 mm
- Appliance corner radius 1.5 mm

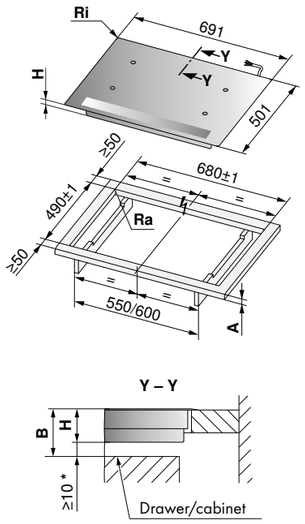

Flush installation with "DualDesign"

- The cooktop must be removable from below

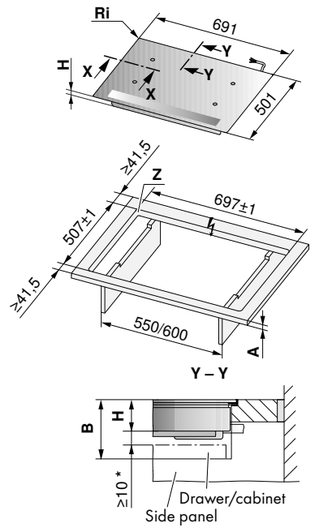

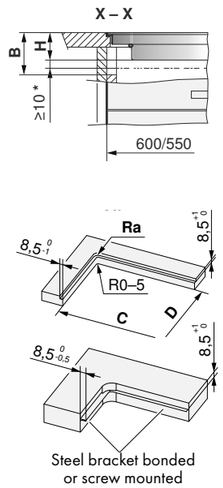

* The clearance space must be maintained.

Applies to the item numbers below

CookTopInduction V4000

3111600007

Type	A – loosely based on manufacturer	B	C/D	H	Corner radius Ra/Ri
CookTopInduction V4000 Surface-mounted installation with "DualDesign"	≥20 mm	≥60 mm		50 mm	5/1.5 mm
CookTopInduction V4000 Flush installation with "DualDesign"	≥20 mm	≥75 mm	680/490	51.7 mm	5/1.5 mm

A Worktop thickness (in combination with oven installed directly below, not applicable to small appliances)
B Required clearance space for ventilation and service exchange over the entire cut-out surface
H Measurement from the top side of the worktop to the underside of the cooktop (ventilation opening)
Ri Appliance corner radius
Ra External corner radius of the cut-out

CookTopInduction V4000 – standard width 60 cm

Surface-mounted installation with chrome steel frame

- Aim to keep corner radius of the cut-out to =≤5 mm
- Appliance corner radius 1.5 mm

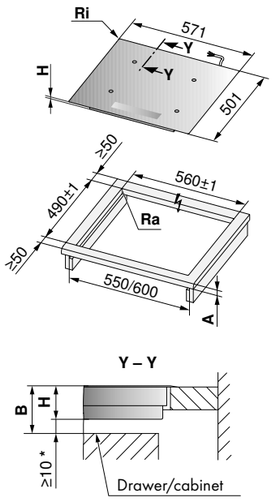

Flush installation with "DualDesign"

- The cooktop must be removable from below

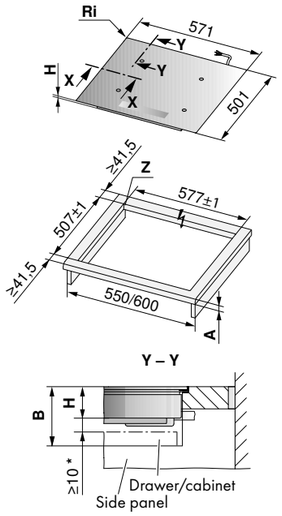

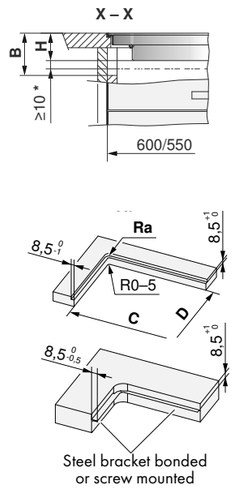

* The clearance space must be maintained.

Applies to the item numbers below

CTI V4000

3111500011

Type	A – loosely based on manufacturer	B	C/D	H	Corner radius Ra/Ri
CookTopInduction V4000 Surface-mounted installation with "DualDesign"	≥20 mm	≥60 mm		50 mm	5/1,5 mm
CookTopInduction V4000 Flush installation with "DualDesign"	≥20 mm	≥75 mm	560/490	51.7 mm	5/1.5 mm

A Worktop thickness (in combination with oven installed directly below, not applicable to small appliances)
B Required clearance space for ventilation and service exchange over the entire cut-out surface
H Measurement from the top side of the worktop to the underside of the cooktop (ventilation opening)
Ri Appliance corner radius
Ra External corner radius of the cut-out

Teppantaki Plate – standard width 40 cm

Surface-mounted installation with "DualDesign"

- Aim to keep corner radius of the cut-out to ≤5 mm
- Appliance corner radius 1.5 mm

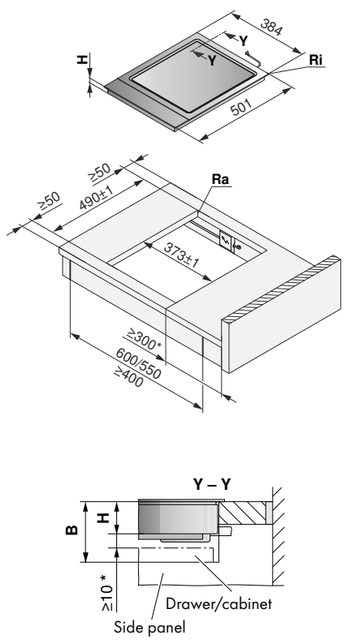

Flush installation with "DualDesign"

- The cooktop must be removable from below

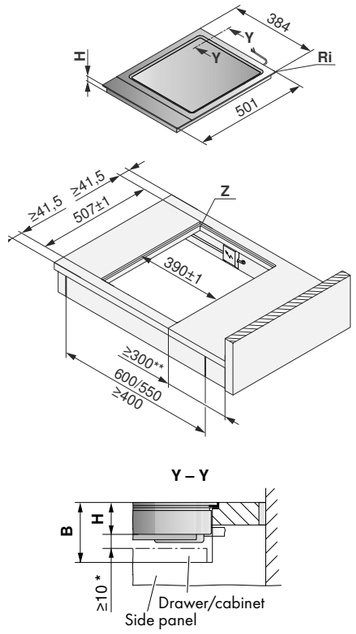

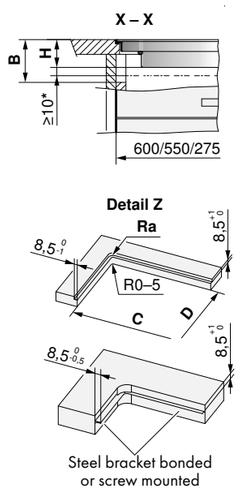

* The clearance space must be maintained.
** On both sides (for technical reasons)

Applies to the item numbers below

GK17TIYSZ

3107660205

Type	A – loosely based on manufacturer	B	C/D	H	Corner radius Ra/Ri
GK17TIYSZ Surface-mounted installation with "DualDesign"	≥20 mm	≥77.6 mm		64 mm	0–5/1.5 mm
GK17TIYSZ Flush installation with "DualDesign"	≥20 mm	≥73.6 mm	373/490 mm	64 mm	5/1.5 mm

A Worktop thickness (in combination with oven installed directly below, not applicable to small appliances)
B Required clearance space for ventilation and service exchange over the entire cut-out surface
H Measurement from the top side of the worktop to the underside of the cooktop (ventilation opening)
Ri Appliance corner radius
Ra External corner radius of the cut-out

CookTopInduction Wok – standard width 40 cm

Surface-mounted installation with "DualDesign"

- Aim to keep corner radius of the cut-out to ≤5 mm
- Appliance corner radius 1.5 mm

Flush installation with "DualDesign"

- The cooktop must be removable from below

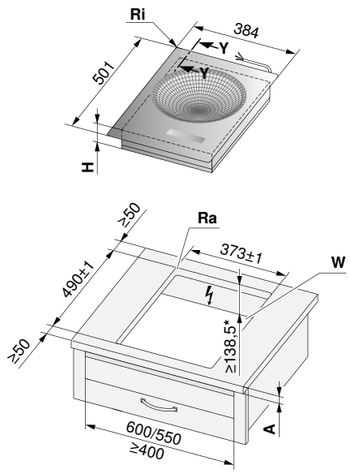

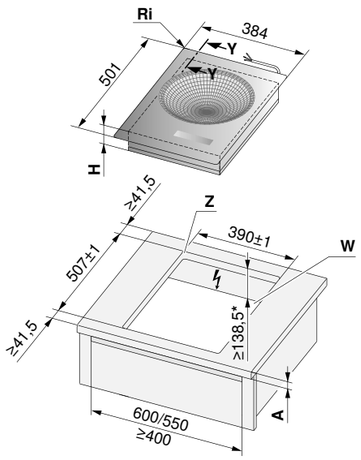

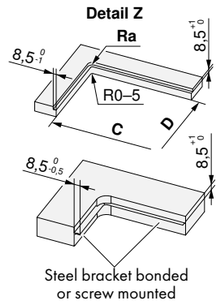

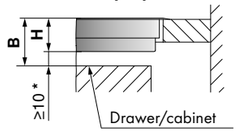

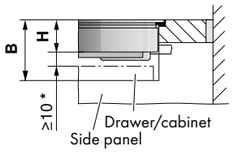

Applies to the item numbers below

GK16TIWS

3108860105

* The clearance space must be maintained.

Type	A – loosely based on manufacturer	B	C/D	H	Corner radius Ra/Ri
GK16TIWSZ Surface-mounted installation with "DualDesign"	≥20 mm	≥138.5 mm		128.5 mm	5/1.5 mm
GK16TIWSZ Flush installation with "DualDesign"	≥20 mm	≥205 mm	373/490 mm	128.5 mm	5/1.5 mm

A Worktop thickness (in combination with oven installed directly below, not applicable to small appliances)
B Required clearance space for ventilation and service exchange over the entire cut-out surface
H Measurement from the top side of the worktop to the underside of the cooktop (ventilation opening)
Ri Appliance corner radius
Ra External corner radius of the cut-out
W The intermediate base must be removable from below

CookTopInduction 2 Zone` – standard width 40 cm

Surface-mounted installation with "DualDesign"

- Aim to keep corner radius of the cut-out to ≤5 mm
- Appliance corner radius 1.5 mm

Flush installation with "DualDesign"

- The cooktop must be removable from below

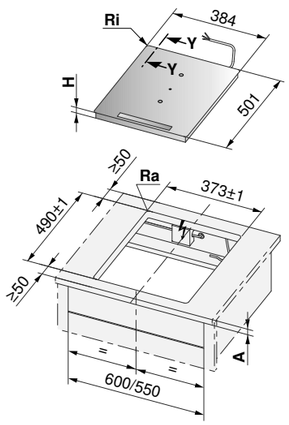

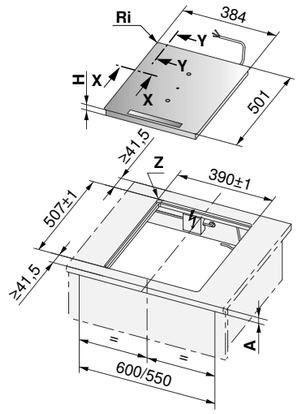

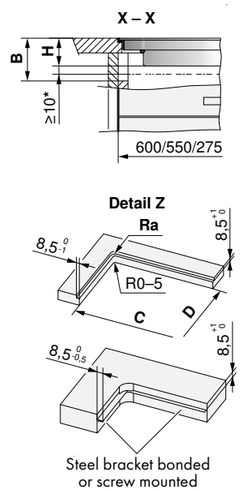

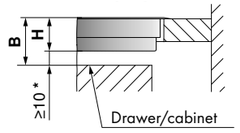

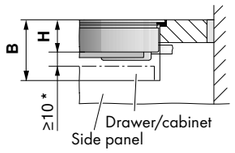

Applies to the item numbers below

GK27TIMS

3108560205

* The clearance space must be maintained.

Type	A – loosely based on manufacturer	B	C/D	H	Corner radius Ra/Ri
GK27TIMSZ Surface-mounted installation with "DualDesign"	≥20 mm	≥61.7 mm		51.7 mm	5/1.5 mm
GK27TIMSZ Flush installation with "DualDesign"	≥20 mm	≥75 mm	373/490 mm	51.7 mm	5/1.5 mm

A Worktop thickness (in combination with oven installed directly below, not applicable to small appliances)
B Required clearance space for ventilation and service exchange over the entire cut-out surface
H Measurement from the top side of the worktop to the underside of the cooktop (ventilation opening)
Ri Appliance corner radius
Ra External corner radius of the cut-out

Product comparison
Gas cooktops

	Gas Cooktop 5 burner	Gas Cooktop 3 burner	Gas Cooktop 4 burner	Gas Cooktop 2 burner	Gas Cooktop Wok
Design options					
Flush-fitting or top-mounted	▪	▪	▪	▪	▪
Applications					
Number of cooking zones	5	3	4	2	1
Bridge function	▪		▪		
Operation/support					
Multi-slider/direct selection	▪		▪	▪	▪
Dials/direct selection		▪			
Timer	▪		▪	▪	▪
Pause button	▪		▪	▪	▪
Automatic boost	▪		▪	▪	▪
Melt function	▪		▪	▪	▪
Simmer function	▪		▪	▪	▪
Keep warm function	▪		▪	▪	▪
Wipe protection function	▪		▪	▪	▪
Restore function	▪		▪	▪	▪
Childproof lock	▪		▪	▪	▪
Pan holder, dishwasher-proof	▪	▪	▪	▪	▪
Additional features					
Safety auto switch-off	▪		▪	▪	▪
Residual heat display	▪		▪	▪	▪
Automatic flame sensor	▪	▪	▪	▪	▪
Automatic re-ignite function	▪		▪	▪	▪
Auto ignition	▪	▪	▪	▪	▪

Gas Cooktops

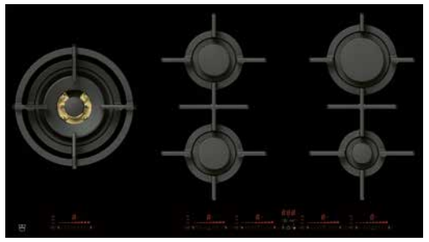

Gas Cooktop 5 burner

Operating modes

Operation and display

- Max. power per cooking zone 6667 W
- Cooking zones 5
- Power levels 9
- Safety package
- Digital display
- Touchscreen slide control
- Offset power wok burner 6kw

Appliance information

Appliance size	897 × 501 mm/R1.5		
Connection	220-240V~	20 W	3 A

Version	Item number	RRP
Standard width: 90 cm		
DualDesign	3107265505	**$4,999**

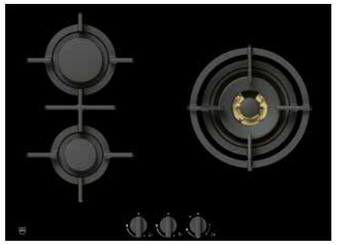

Gas Cooktop 3 burner

Operating modes

- Manual Operation

Operation and display

- Max. power per cooking zone 6667 W
- Cooking zones 3
- Power levels Infinitely variable
- Dial control
- Offset power wok burner 6kw

Appliance information

Appliance size	691 × 501 mm/R1.5		
Connection	220-240V~	20 W	3 A

Version	Item number	RRP
Standard width: 70 cm		
DualDesign	3107565305	**$2,999**

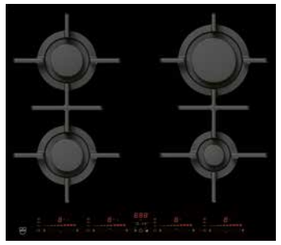

Gas Cooktop 4 burner

Operating modes

Operation and display

- Max. power per cooking zone 3194 W
- Cooking zones 4
- Power levels 9
- Safety package
- Digital display
- Touchscreen slide controln

Appliance information

Appliance size	571 × 501 mm/R1.5		
Connection	220-240V~	20 W	3 A

Version	Item number	RRP
Standard width: 60 cm		
DualDesign	3107165405	**$3,999**

Gas Cooktop 2 burner

Operating modes

Operation and display

- Max. power per cooking zone 3194 W
- Cooking zones 2
- Power levels 9
- Safety package
- Digital display
- Touchscreen slide control

Appliance information

Appliance size	384 × 501 mm/R1.5		
Connection	220-240V~	20 W	3 A

Version	Item number	RRP
Standard width: 40 cm		
DualDesign	3106465205	**$2,499**

Gas Cooktop Wok

Operating modes

Operation and display

- Max. power 6667 W
- Cooking zones 1
- Power levels 9
- Safety package
- Digital display
- Touchscreen slide control

Appliance information

Appliance size	384 × 501 mm/R1.5		
Connection	220-240V~	20 W	3 A

Version	Item number	RRP
Standard width: 40 cm		
DualDesign	3106365105	**$2,799**

Dimensions

GAS 951GS

Surface-mounted installation with „DualDesign"

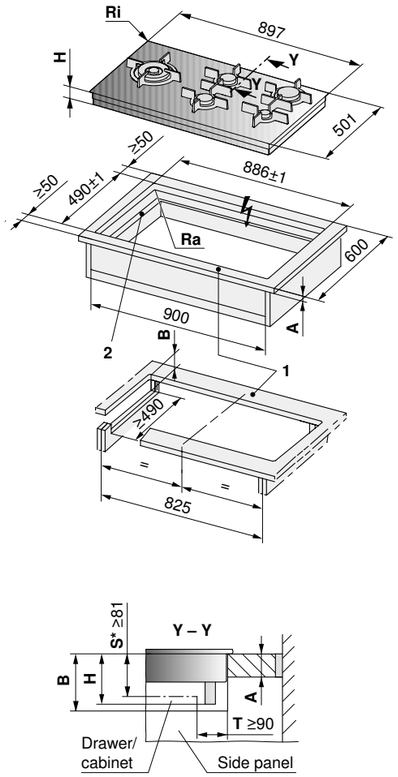

Flush installation with „DualDesign"

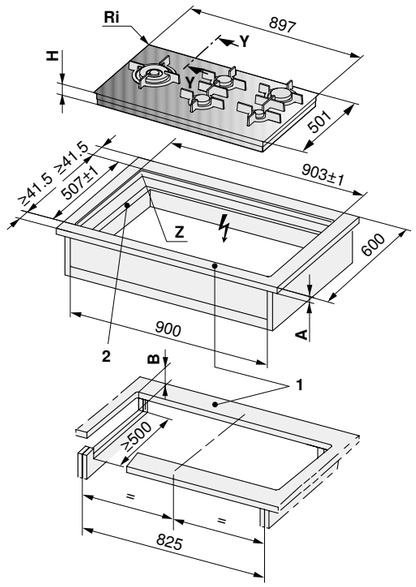

Applies to the article numbers below

GAS 951GS

3107265505

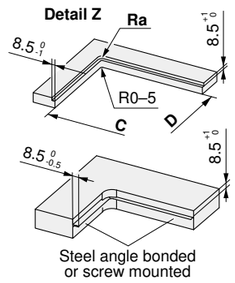

* The required clearance must be observed!

1 Front and rear struts may be reinforced on the underside. The strut width is determined by the producer of the stone worktop. The minimum strut width can vary according to the property of the stone.

2 For niche width 900 mm, cut-outs in side walls left/right are necessary for servicing work where the appliance base must be accessible from below.

Typ	A Depends on producer	B	C/D	H	Corner radius Ra/Ri
GAS 951GSBZ Surface-mounted installation with „DualDesign"	≤30 mm	≥95 mm		94 mm	0–5/1,5 mm
GAS 951GSAZ/GSBZ Flush installation with „DualDesign"	≤30 mm	≥175 mm	886/490 mm	98 mm	5/1,5 mm

A Worktop depth
B Required clearance for service replacement over the entire cut-out area.
H Dimension from the top of the work surface to the underside of the gas connection
Ri Corner radii of appliance
Ra Outer corner radii of cut-out
S Minimum distance between the top of the work surface and any drawer
T Minimum distance between the cut-out in the back and any drawer

GAS 731GK

Surface-mounted installation with „DualDesign"

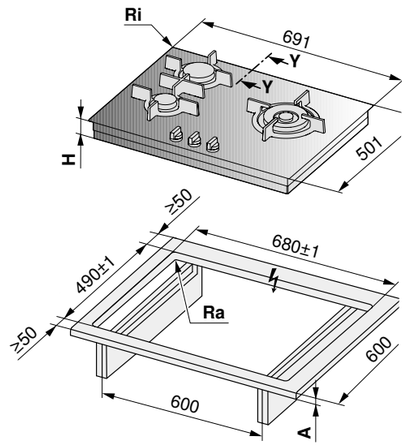

Flush installation with „DualDesign"

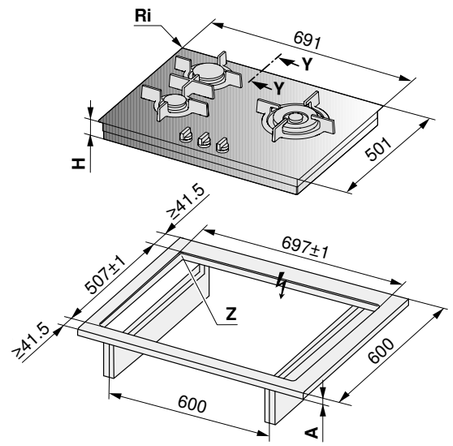

Applies to the article numbers below

GAS 731GK

3107565305

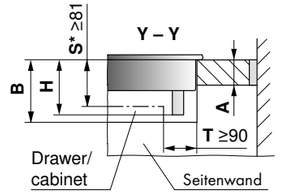

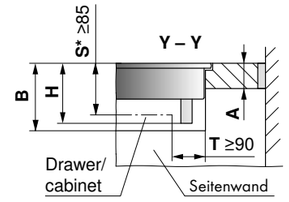

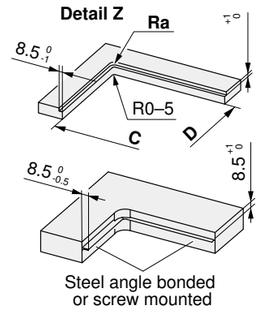

* The required clearance must be observed!

Typ	A Depends on producer	B	C/D	H	Corner radius Ra/Ri
GAS 731GKBZ Surface-mounted installation with „DualDesign"	≤30 mm	≥95 mm		84 mm	0–5/1,5 mm
GAS 731GKBZ Flush installation with „DualDesign"	≤30 mm	≥175 mm	680/490 mm	88 mm	5/1,5 mm

A Worktop depth
B Required clearance for service replacement over the entire cut-out area.
H Dimension from the top of the work surface to the underside of the gas connection
Ri Corner radii of appliance
Ra Outer corner radii of cut-out
S Minimum distance between the top of the work surface and any drawer
T Minimum distance between the cut-out in the back and any drawer

GAS 641GS

Surface-mounted installation with „DualDesign"

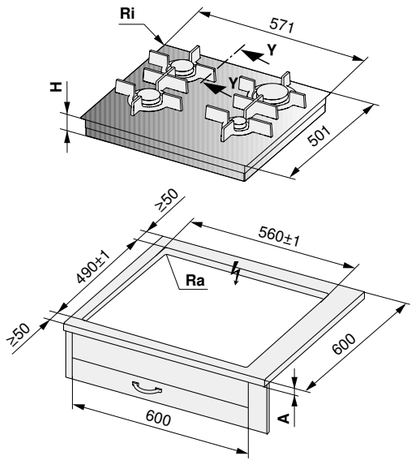

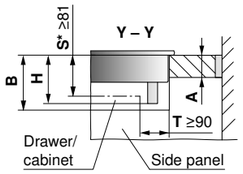

Applies to the article numbers below

GAS 641GS

3107165405

Flush installation with „DualDesign"

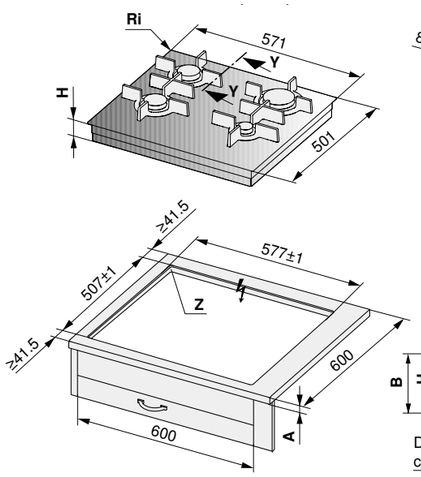

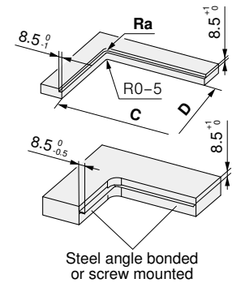

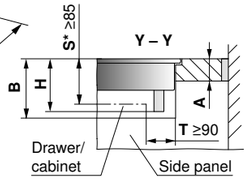

* The required clearance must be observed!

Typ	A Depends on producer	B	C/D	H	Corner radius Ra/Ri
GAS641GSAZ Surface-mounted installation with „DualDesign"	≤30 mm	≥175 mm		94 mm	0–5/1,5 mm
GAS641GSAZ Flush installation with „DualDesign"	≤30 mm	≥175 mm	560/490 mm	89 mm	5/1,5 mm

A Worktop depth
B Required clearance for service replacement over the entire cut-out area.
H Dimension from the top of the work surface to the underside of the gas connection
Ri Corner radii of appliance
Ra Outer corner radii of cut-out
S Minimum distance between the top of the work surface and any drawer
T Minimum distance between the cut-out in the back and any drawer

GAS 421GS

Surface-mounted installation with „DualDesign"

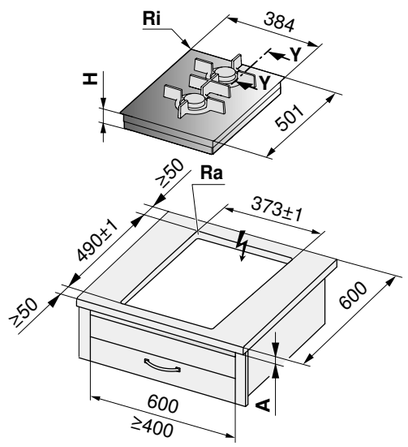

Flush installation with „DualDesign"

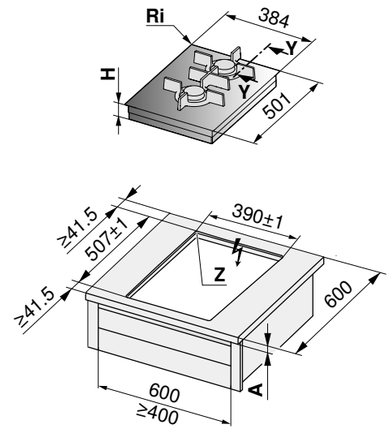

Applies to the article numbers below

GAS 421GS

3106465205

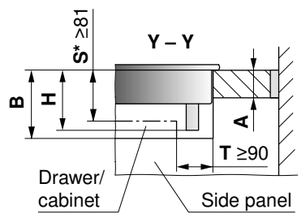

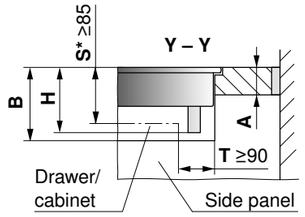

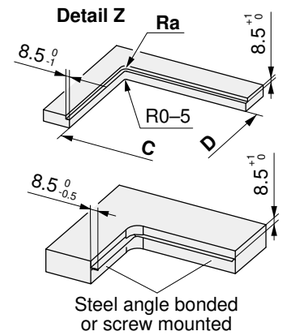

* The required clearance must be observed!

1 Front and rear struts may be reinforced on the underside. The strut width is determined by the producer of the stone worktop. The minimum strut width can vary according to the property of the stone.

2 For niche width 900 mm, cut-outs in side walls left/right are necessary for servicing work where the appliance base must be accessible from below.

Typ	A Depends on producer	B	C/D	H	Corner radius Ra/Ri
GAS 421GSBZ Surface-mounted installation with „DualDesign"	≤30 mm	≥95 mm		94 mm	0–5/1,5 mm
GAS 421GSAZ/GSBZ Flush installation with „DualDesign"	≤30 mm	≥175 mm	373/490 mm	98 mm	5/1,5 mm

A Worktop depth
B Required clearance for service replacement over the entire cut-out area.
H Dimension from the top of the work surface to the underside of the gas connection
Ri Corner radii of appliance
Ra Outer corner radii of cut-out
S Minimum distance between the top of the work surface and any drawer
T Minimum distance between the cut-out in the back and any drawer

GAS 411GS

Surface-mounted installation with „DualDesign"

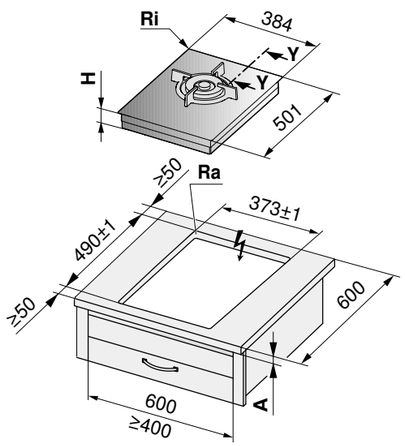

Flush installation with „DualDesign"

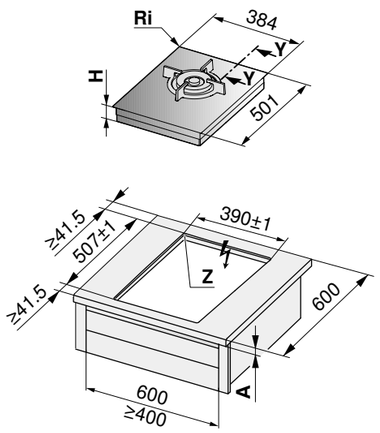

Applies to the article numbers below

GAS 411GS

3106365105

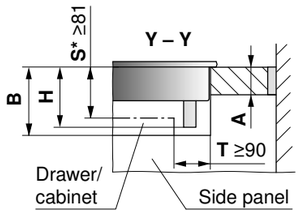

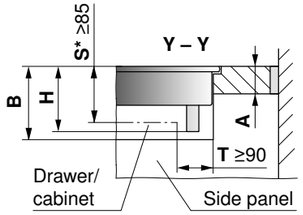

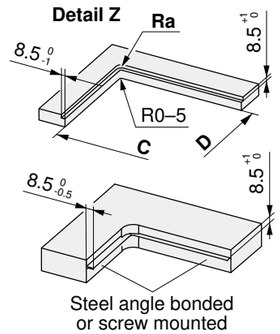

* The required clearance must be observed!

1 Front and rear struts may be reinforced on the underside. The strut width is determined by the producer of the stone worktop. The minimum strut width can vary according to the property of the stone.

2 For niche width 900 mm, cut-outs in side walls left/right are necessary for servicing work where the appliance base must be accessible from below.

Typ	A Depends on producer	B	C/D	H	Corner radius Ra/Ri
GAS 411GSBZ Flush installation with „DualDesign"	≤30 mm	≥95 mm		94 mm	0–5/1,5 mm
GAS 411GSAZ Surface-mounted installation with „DualDesign"	≤30 mm	≥175 mm	373/490 mm	98 mm	5/1,5 mm

A Worktop depth
B Required clearance for service replacement over the entire cut-out area.
H Dimension from the top of the work surface to the underside of the gas connection
Ri Corner radii of appliance
Ra Outer corner radii of cut-out
S Minimum distance between the top of the work surface and any drawer
T Minimum distance between the cut-out in the back and any drawer

Induction and Gas Cooktop Accessories

Induction cooktop accessories

1

2

3

	Description	Item no.
1	Combination base kit for flush-fitting cooktop combinations	H63789
2	Cover/chopping board for teppanyaki, narrow	1021462
3	Premium teppanyaki plate for FullFlex induction	1037885

Gas cooktop accessories

	Description	Item no.
1	Construction set: bridge for cooktop combinations, flush-fitting	H63789
2	Connecting bridge, support (black)	1019199
3	Additional pan support trivet for small pans, mocca attachment	1015122

Rangehoods

Beautifully integrated overhead or as part of your cooktop, our functional rangehood and extraction options are built to perform without detracting from your design.

Integrated Cooktop Extraction - functionally beautiful

From striking designer extractors to discreetly concealed hoods, our Rangehoods and extraction solutions boast luxury design, innovate superior technology and reliable functionality.

The growing trend for open-plan kitchens has also driven innovative solutions for Rangehoods that are both and functional. We offer a selection of hoods and extractors to meet a variety of needs. Downdraft and cooktop extractors are integrated in the worktop or cooktop and are almost invisible. They provide uninterrupted headroom. With units that draw steam upwards, the choice is between a visible hood and a built-in one. Models with the innovative OptiLink feature are automatically controlled depending on what is happening on the cooktop.

Automatic regulation

By exchanging information, the range hood and cooktop ensure that the extraction rate is automatically adjusted depending on the current cooking activity. This assures optimal air quality without the need for any manual intervention. Energy consumption is then also precisely matched to the level of cooking activity.

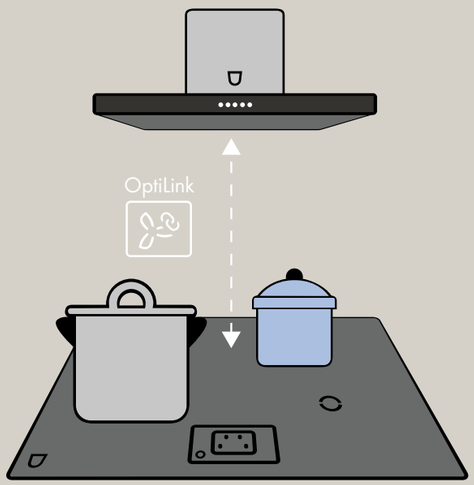

With the Fusion cooktop, the extraction is seamlessy integrated as part of the appliance. It's two in one.

Striking or discreet?

Space-saving? Discreetly integrated? Aesthetically appealing? Our Rangehoods meet every need.

Space-saving and barely noticeable

Built-in Rangehoods and integrated Rangehoods are built into kitchen wall units or fitted into a specially constructed casing. Because they are integrated in the overall kitchen design, they are almost invisible.

Downdraft extractors built into the worktop for seemless design with functionality

Users who prefer clean lines and an unimpeded view of the cooktop will favour a cooktop extractor. This modular unit is built in between one or two cooktops, teppanyaki cooktop or wok. This offers complete freedom to combine elements to create your own individual cooking centre. Another option is a Fusion cooktop which comes with an already integrated extractor. Its minimalist design allows for perfect integration into its surroundings. The OptiLink function turns the extractor on and off and automatically adjusts the air flow to the cooking process. Since both these extractors are right next to the pans, they draw the steam away downwards at source. A downdraft extractor, on the other hand, is installed behind the cooktop and rises up to the level of the pans when needed. It is particularly suitable for panorama cooktops.

Integrated range hood

Cooktop extractor

Downdraft extractor

Cooktop with integrated extractor

DESIGN AWARD 2019

reddot award 2019 winner

PLUS X AWARD 2019/2018 Achieved for: High Quality Design Ease of Use Functionality

Built in Rangehoods - invisible, powerful, efficient

The new AiroClearCabinet V4000 combines the power of a tried and trusted slide-out range hood with the convenience of an integrated range hood. The OptiLink function enables it to regulate the power level itself depending on what is cooking on the cooktop.

The new range hood disappears completely into the wall unit or into a specially designed casing above the cooktop that matches the kitchen. This makes the integrated range hood the ideal solution for anyone who is not interested in showing off their extractor. Its compact design leaves plenty of space at the sides for spices or cookery books.

The AiroClearCabinet V4000 is available in two widths – 56 cm and 86 cm – as either an extraction or recirculation model. Although it cleans the air vigorously, it is still a quiet and energy-saving hood. Integrated Rangehoods can be installed quickly and used immediately. To offer more planning options, the exhaust duct can be positioned at the top or to the side on the right.

OptiLink – automatically regulates extraction

As well as not seeing the integrated range hood, it's also unnecessary to control it since it comes as standard with the innovative OptiLink function which enables it to communicate with the cooktop via Bluetooth. The only prerequisite for smart cooking is choosing a cooktop that is also equipped with OptiLink. The extractor turns on automatically at the start of the cooking process and then adjusts the power constantly in order to ensure optimum air quality in the most efficient way possible. The automatic run-on feature clears any residual odours and humidity from the kitchen for 5–20 minutes after the cooktop has been switched off.

Many users forget to turn the extractor on or off, or operate it at an incorrect power level. OptiLink frees you to focus on cooking and leaves your hands free to prepare the food. Manual intervention is possible at any time, however.

Product comparison Downdraft extraction

	DSTS	DSMS	GKD46TIMAS Fusion
Versions			
Glass front		■	
OptiGlass			■
90 cm width	■		
80 cm width			■
Extraction	■	■	■
Recirculation with standard activated charcoal filter	■	■	■
Recirculation with longlife activated charcoal filter	■		
Features			
LED lighting	■		
Colour temperature (kelvin)	4000		
Dimmable light	■		
Number of grease filters	2	1	2
Automatic run-on	■	■	■
Intensive setting	■	■	■
CleanAir	■		■
Grease filter saturation indicator	■	■	■
More efficient BLDC motor		■	■
Operation and display			
Touch graphic display			■
TouchControl	■	■	
OptiLink			■
Number of power settings	4	4	10
Fan setting display	■	■	■

■ = present *for an additional charge

Downdraft Extractors

DSTS

A range hood of the highest calibre: the retractable downdraft extractor lends the kitchen an added air of exclusivity.

Operating modes

Operating modes

- Extracted air output, max. setting 420 m^3/h
- Extracted air output, intensive setting 670 m^3/h
- Air output according to EN 61591
- Power levels 3 + i
- Extracted air noise level, max. setting 57 dB(A)
- Extracted air noise output, intensive setting 69 dB(A)
- Exhaust air connection (diameter) 150 mm
- Non-return flap Included
- Lighting LED
- Number of lights 1 LED-Strip
- Intensive setting with automatic reset
- Clean air function
- TouchControl

Appliance information

Appliance size	646 × 880 × 120 mm		
Extension height	400 mm		
Connection	220-240V~	276 W	10 A

Version	Item number	RRP
90 cm		
Glass	6400465005	**$5,799**

Extras for recirculation mode

Recirculation box for base area with activated charcoal filter package approx. 3.5 years maintenance-free	1012161
Long-life activated charcoal filter	1012163
Extras for versions with an external motor construction kit	1012164

DSMS

Almost completely concealed in the kitchen worktop, the cooktop extractor offers highly effective extraction.

Operating modes

Operating modes

- Extracted air output, max. setting 500 m^3/h
- Extracted air output, intensive setting 590 m^3/h
- Air output according to EN 61591
- Power levels 3 + i
- Extracted air noise level, max. setting 67 dB(A)
- Extracted air noise output, intensive setting 70 dB(A)
- Exhaust air connection (diameter) 150 mm
- Intensive setting with automatic reset
- TouchControl
- Removable drip tray with integral grease filter, dishwasher safe
- Capacity of collection tray 500 ml

Illustration includes cooktops which are not included with the product.

Appliance information

Appliance size	110 × 501 mm/R1.5		
Connection	220-240V~	145 W	10 A

Version	Item number	RRP
Glass	6400565005	**$4,399**

Extras for recirculation mode

Recirculation box for base area with activated charcoal filter package approx. 3.5 years maintenance-free	1012161

CookTopInduction Fusion

This ingenious extractor is integrated into the cooktop and draws vapour in a downwards direction.

Cooktop operating modes

Extraction operating modes

Operation and display

- Extraction rate on intensive setting: 583 m^3/h
- Air output according to EN 61591
- 500 ml removable drip tray with integral grease filter, dishwasher-safe
- Pan detection (10 – 22 cm)
- Touchscreen graphic display in 9 languages
- Single slider
- Cooktop power with PowerPlus 2 × 3000 W, 1 × 3500 W, 1 × 3700 W

Appliance information

Appliance size	761 × 501 mm/R1.5		
Connection	230 V~	7400 W	32 A

Version	Item number	RRP
80 cm		
DualDesign	3109465415	**$5,899**

Extras for recirculation mode

Recirculation box for base area with activated charcoal filter package approx. 3.5 years maintenance-free 1012161

Dimensions

DSTS – downdraft extractor

Surface-mounted installation version

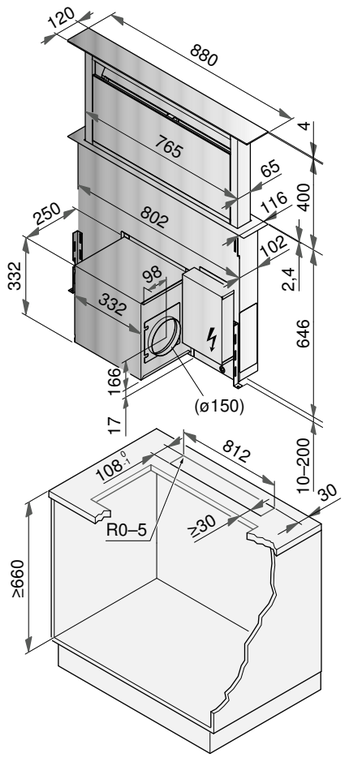

Flush installation version

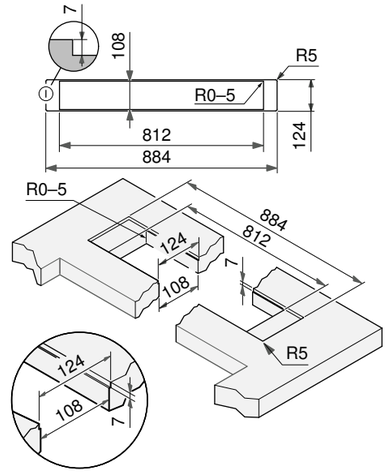

Applies to the item numbers below

DSTS

6400465005
1012161
1012163
1012164

- Alternatively, the motor housing can also be mounted onto the range hood from the back. However, it must still be possible to gain access from the front for servicing and installation purposes.
- The exhaust vent can be placed in four different directions.

DSMS

Wall installation, depth ≥600 mm

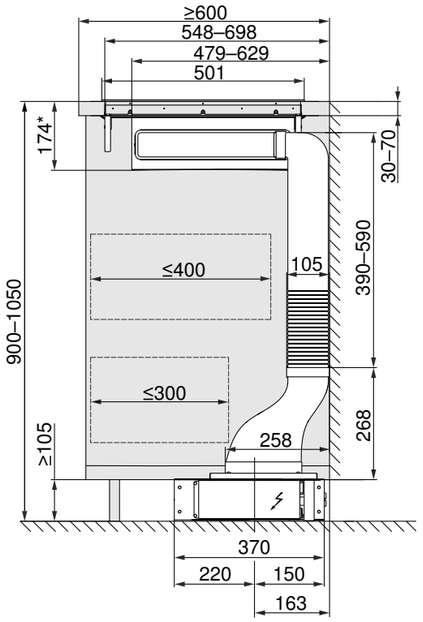

Wall/island installation, depth ≥700 mm

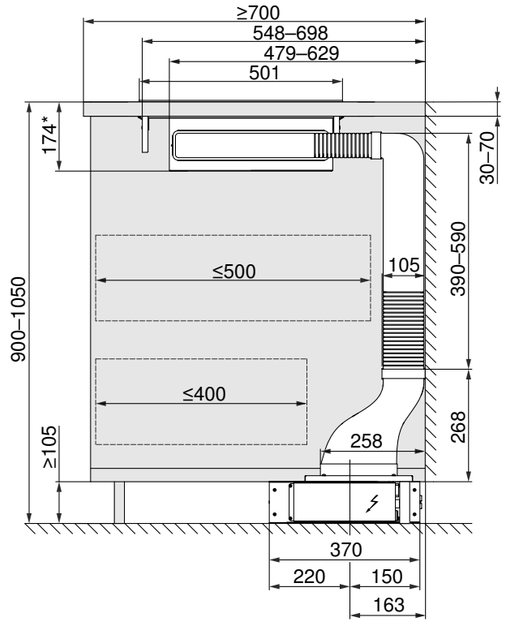

Island installation, depth ≥900 mm

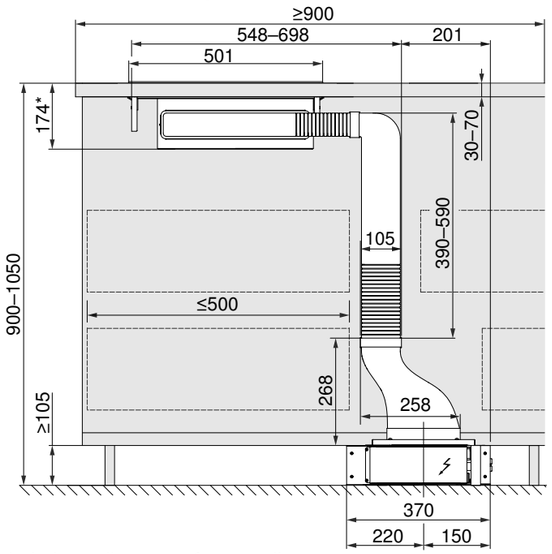

* Flush installation. Surface installation: 170 mm

Applies to the item numbers below

DSMS

6400565005
1012161

GKD46TIMASZO FUSION

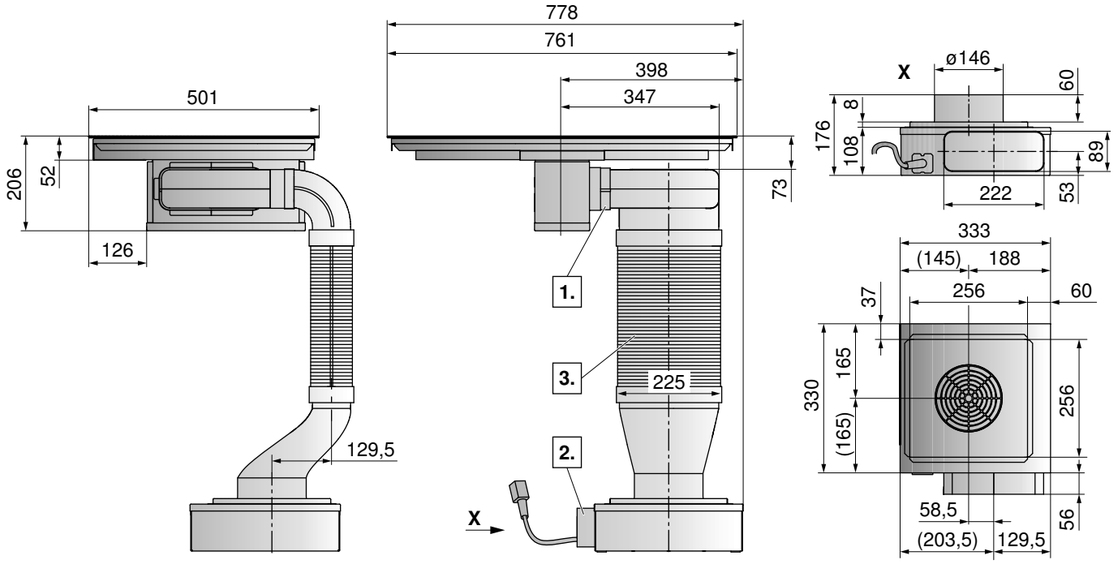

1. The air duct can be placed on the left or right.
2. The fan motor can be rotated – this will change the installation situation.
3. Depending on space requirements, the position of the fan motor can be adjusted flexibly by shortening the flat duct.

Applies to the item numbers below

GKD46TIMASZO-FUSION

3109465415
1012161

You can find more detailed information at **vzug.com**

AiroClear Rangehoods - powerful, quiet, effective

From SilentPlus to ComfortFix and FlexLED – our Rangehoods are brimming with technical advances that have stood the test of time.

Extremely quiet thanks to SilentPlus

A noise insulation system reduces motor noise and vibrations (max. 63 dB(A)). Even on the maximum setting, holding a conversation in the kitchen at normal volume is no problem.

Easy grease filter handling with ComfortFix

Attached by magnetic fixings, the grease filters can be safely removed for cleaning before reinsertion. A fixture holds the filter in place during removal so it cannot fall down and damage the cooktop.

FlexLED lighting

The whole working area is evenly illuminated. The LED lights require very little electricity and, depending on the model, their colour temperature may be matched to the surrounding kitchen lighting.

Effective longlife activated charcoal filter

Cooking smells are removed using different types of activated charcoal filters. The longlife-plus activated charcoal filter is ideal for combating intensive odours as it effectively reduces over 80 % of smells. It is very easy to use, can be regenerated in the oven and lasts around three years.

Easy to clean and user-friendly

Only regularly cleaned hoods retain their effectiveness. The parts in our appliances are easy to remove for cleaning.

Grease filter

The frame is made of stainless steel with a high-grade finish. The interior of the hood has no sharp edges or screws and can be quickly wiped clean with a damp cloth. The grease filters on some models are attached by magnetic fixings (ComfortFix) and can be safely removed for cleaning then simply reinserted again. Most hoods have a saturation indicator that is activated as soon as the grease filter needs to be cleaned. The filters are dishwasher-safe.

Activated charcoal filter

The activated charcoal filters can be easily removed and on some models they can be regenerated. For example, the most efficient longlife-plus activated charcoal filter can be regenerated by means of thermal regeneration in the oven every three to six months. The longlife activated charcoal filter can be cleaned in the dishwasher and then dried in the oven.

Drip tray

No need to worry if anything boils over or liquids are spilled. The cooktop hood and the Fusion cooktop with integral hood have a drip tray which can hold up to 0.5 litres. It can simply be lifted out of its holder together with the grease filter and cleaned in the dishwasher.

Product comparison
AiroClear integrated Rangehoods

	AiroClear Cabinet V4000 Single Motor	AiroClear Cabinet V4000 Twin Motor
Versions		
ChromeClass	■	■
Integral fitting	■	■
86 cm width	■	■
60 cm width	■	
Single Motor	■	
Twin Motor		■
Extraction	■	■
Recirculation with longlife-plus activated charcoal filter	■	
Features		
FlexLED adjustable 2700–4000 kelvin	■	■
LED lighting	■	■
SilentPlus	■	■
Number of grease filters	1/2	1/2
ComfortFix	■	■
Automatic run-on	■	■
Grease filter saturation indicator	■	■
Connection for air intake/exhaust flap	■	■
Operation and display		
Touch buttons	■	■
Remote control*	■	■
OptiLink	■	■
Number of power settings	4	4
Fan setting display	■	■

■ = present *for an additional charge accessories from page 124

AiroClear Rangehoods

AiroClearCabinet V4000 Single Motor

Virtually invisible, this powerful and robust range hood offers the ultimate in convenience.

Operating modes

Operating modes

- Extracted air output, max. setting 598 m^3/h
- Extracted air output, intensive setting 704 m^3/h
- Air output according to EN 61591
- Power levels 3 + i
- Extracted air noise level, max. setting 64 dB(A)
- Extracted air noise output, intensive setting 67 dB(A)
- Exhaust air connection (diameter) 150 mm
- Lighting LED
- Number of lights 2
- Remote control optional, available as accessory
- Intensive setting with automatic reset
- Push buttons
- Light colour in kelvin adjustable 2700 - 4000 Kelvin
- Connection for fresh air/exhaust air flap
- ComfortFix, convenient handling and fixing of the metal grease filter

Appliance information

Appliance size 6.5 × 560* × 320 mm
*Dependent on standard width
Connection 220-240V~ 269 W 10 A

Version	Item number	RRP
60 cm		
ChromeClass	6400900004	**$1,899**
90 cm		
ChromeClass	6401000004	**$2,299**

AiroClearCabinet V4000 Twin Motor

Virtually invisible, this extreme powerful and robust range hood offers the ultimate in convenience with a twin motor

Operating modes

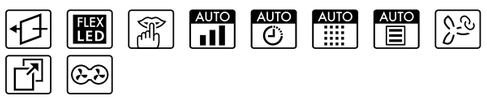

Operating modes

- Extracted air output, max. setting 1162 m^3/h
- Extracted air output, intensive setting 1230 m^3/h
- Power levels 3 + i
- Extracted air noise level, max. setting 69 dB(A)
- Extracted air noise output, intensive setting 71 dB(A)
- Exhaust air connection (diameter) 200 mm
- Lighting LED
- Number of lights 2
- Remote control optional, available as accessory
- Intensive setting with automatic reset
- Push buttons
- Light colour in kelvin adjustable 2700 - 4000 Kelvin
- Connection for fresh air/exhaust air flap
- ComfortFix, convenient handling and fixing of the metal grease filter

Appliance information

Appliance size 6.5 × 860 × 320 mm

Connection 220-240V~ 534 W 10 A

Version	Item number	RRP
90 cm		
ChromeClass	6401100000	**$2,999**

Dimensions

AiroClearCabinet V4000

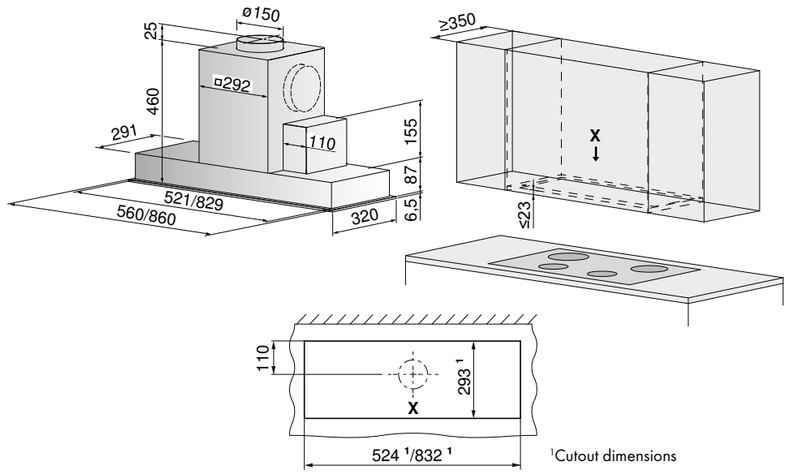

¹Cutout dimensions

Applies to the item numbers below

AiroClearCabinet V4000

6400900004
6401000004

AiroClearCabinet V4000 Twin Motor

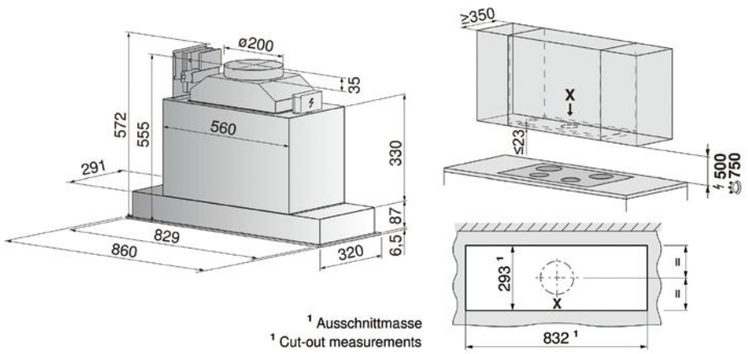

¹Cutout dimensions

Applies to the item numbers below

AiroClearCabinet V4000

6401100000

Rangehood Filters

Longlife activated charcoal filter
The filter can be regenerated and has a service life of up to three years.
Every two to three months it must be cleaned in the dishwasher or with warm water and a mild detergent, then dried in the oven at 100 °C.

Standard activated charcoal filter
This odour filter, which consists of an individual blend of activated charcoal, has a service life of between six months and five years, depending on the size, weight and number of filters fitted. It cannot be regenerated and must be replaced at the specified intervals.

You can find more detailed information at **vzug.com**

Dishwashers

A premium option for your kitchen that performs efficiently and effectively adding a little extra sparkle to your daily life.

Exceptional performance that is easy on the environment.

The AdoraDish range, including the world's only heat-pump dishwasher, takes water and energy efficiency in dish washing to a new level. Programs that reduce time, water, energy and chemicals are both functional and considerate of the future.

Spacious, functional and flexible

Adora dishwashers are flexible when it comes to organising the interior space. Four rows of prongs in the lower basket with a MultiFlex Zone provide stability. These can simply be folded down if a larger flat area is required. The ergoPlus drawer, allows you to load cutlery in an ergonomic and structured way. The various items of cutlery lie in the drawer without touching so they can all be cleaned effectively without scratches or marks.

Beautiful design meets efficiency and functionality.

The AdoraDish range are fully integrated for a seamless design finish and feature our innovative touchscreen control and LED lighting.

LCD Touchscreen Control

The modern LCD display with touchscreen controls offers streamlined access to our unique programs and settings. The display allows you to choose your program and adjust the settings but also offers information about the options so you have everything at your finger tips. The panel is also practical, designed for longevity and ease of use, including cleaning.

Integrated design and installation

Our AdoraDish range are designed to be completely integrated into your kitchen design, providing a flawlessly personalised finish, letting them be a star behind the scenes.

Our unique hinging system allows for raised installation, making loading and unloading a breeze. Under bench the hinges mean that you can achieve a seamless finish right to the floor.

The V6000 range is available in an extra height or standard height option to suit both new and existing spaces.

Highlighting the sparkle

Energy efficient LED lighting brings the interior of the AdoraDish to life, allowing you to easily see what you are doing as you stack or unpack. When you dishes are done, the lighting shows off the extra clean sparkle turning an everyday chore into a brighter experience.

Heat pump option – our unique innovation

V-ZUG's Dishwasher with a heat pump uses up to 50% less energy than conventional ones. This technology is as simple as it is effective and efficient. A closed water cycle is integrated in the heat reservoir. Latent heat is extracted from the water and the energy gained is used to heat the water reducing or eliminating the use of the traditional element..

Dishwashers that provide performance, innovation and sustainability

Whether getting party dishes clean again in a record-breaking 11 minutes or removing baked-on cheese with the Fondue/ Raclette programme, the AdoraDish range offers innovative and intelligent programmes to meet every need.

Fast and energy-efficient

Energy-efficient or perfect results? With Adora dishwashers you no longer have to choose as they also achieve top marks in energy and water consumption with their quickest programmes. Such as the 47 minutes taken by the Everyday Short programme. Or the Party programme that can clean lightly soiled dishes in 11 minutes flat. Up to five cycles in a row are possible so large quantities of lightly soiled dishes can be quickly turned around - perfect for party time!

OptiStart

This intelligent delayed start function uses the waiting time before the programme begins to wet the dishes. Once the washing cycle commences, the dirt has been softened on the dishes so the appliance is able to rinse them at a lower temperature, reducing energy and detergent use, protecting the longevity of your dishes and doing your bit for a better world..

Fondue/raclette programme

This exclusive and patented programme is distinguished by an initial soak phase at a lower temperature, prior to the main wash. Thanks to this innovation, dishes and pans with baked on fats and proteins (like cheese) come out spotlessly clean, without pre soaking in the sink.

Patented SteamFinish technology

Steam is produced at the end of the drying programme. This condenses on the dishes in the form of distilled water, removing any remaining residues. The result is clearly visible on wine glasses in particular: sparkling clean glass all round instead of dried-on water stains around the rim. The Steam Finish also improves the drying quality on your dishes and is particularly beneficial when washing plastics.

EcoManagement – keep track of your energy & water use

The EcoManagement function provides information about how much water and energy the appliance uses. Sensors and functions support efficient and economical cleaning – for example, the turbidity sensor ensures that fresh water is not used unnecessarily. The rinsing agent function automatically adjusts the quantity of rinsing aid according to the water hardness and the load which cuts down on the amount required. The door opener automatically opens the door at the end of the rinsing cycle, reducing the drying phase and saving energy.

Product comparison Dishwashers

	AdoraDish V6000 Heat pump	AdoraDish V6000 Cutlery drawer	AdoraDish V6000	AdoraDish V2000
Versions				
Extra-height version	■	■	■	■
Fully integrated	■	■	■	■
Features				
Heat pump	■			
ergoPlus cutlery drawer		■		
Cutllery basket	■		■	■
LED interior lighting	■	■	■	■
Automatic door opener	■	■	■	■
Exclusive V-ZUG features				
Sprint/Party programme (mins)	20/11	20/11	20/11	20/-
Special function for hot water connection	■	■	■	■
SteamFinish	■	■	■	
Everyday Short	■	■	■	
Upper basket with multi-height adjustment	■	■	■	■
Features				
Number of standard place settings	13	14	13	13
Easy installation in tall unit	■	■	■	■
Number of programmes	12	12	12	8
All-in-1 option	■	■	■	■
Hygiene programme	■	■	■	■
Childproof lock	■	■	■	■
EcoManagement	■	■	■	■
Operation and display				
Delayed start	■	■	■	■
LCD display with plain text	■	■	■	■
Touch control	■	■	■	■
Appliance height 60				
Standard (mm)	867–907		780–896	780–896
Extra-height (mm)		845–961		

The world's first with heat pump technology

AdoraDish V6000 Heat pump

The fully integrated premium appliance: the first dishwasher with heat pump technology is a world champion in energy saving.

Operating modes

Operation and display

- LCD-Display
- TouchControl
- Rinse water storage tank
- Automatic door opener
- FunctionLight
- Lighting LED
- Capacity standard place settings 13
- Turbidity sensor
- Automatic rinse agent dosage
- Water hardness control

Appliance information

Appliance size	867 × 596 × 550 mm		
Connection	220-240V~	2200 W	10 A

From 6 l/0.48 kWh/43 dB(A)

Version	Article number	RRP
Standard		
Fully integrated	4112100007	**$5,999**

AdoraDish V6000 with ergoPlus cutlery drawer

A premium appliance with the world-exclusive SteamFinish and ergoPlus cutlery drawer.

Operating modes

Operation and display

- LCD-Display
- TouchControl
- ErgoPlus cutlery drawer
- Rinse water storage tank
- Automatic door opener
- FunctionLight
- Lighting LED
- Capacity standard place settings 14
- Turbidity sensor
- Automatic rinse agent dosage
- Water hardness control

Appliance information

Appliance size	845 × 596 × 550 mm		
Connection	220-240V~	2200 W	10 A

From 5 l/0.71 kWh/40 dB(A)

Version	Article number	
Large capacity		
Fully integrated	4112000009	**$3,999**

All dishwashers are shown with integrated joinery panel for illustration purposes only. Not supplied.

AdoraDish V6000

A first-class fully integrated dishwasher with the world-exclusive SteamFinish.

Operating modes

Operation and display

- LCD-Display
- TouchControl
- Rinse water storage tank
- Automatic door opener
- FunctionLight
- Lighting LED
- Capacity standard place settings 13
- Automatic rinse agent dosage
- Water hardness control
- Turbidity sensor

Appliance information

Appliance size	780 × 596 × 550 mm		
Connection	220-240V~	2200 W	10 A

From 5 l/0.66 kWh/40 dB(A)

Version	Article number	RRP
Standard		
Fully integrated	4111800013	**$3,999**

AdoraDish V2000

This fully integrated appliance offers space for 13 standard place settings.

Operating modes

Operation and display

- LCD-Display
- TouchControl
- Automatic door opener
- FunctionLight
- Lighting LED
- Capacity standard place settings 13
- Turbidity sensor
- Automatic rinse agent dosage
- Turbidity sensor

Appliance information

Appliance size	780 × 596 × 550 mm		
Connection	220-240V~	2200 W	10 A

From 8 l/0.73 kWh/43 dB(A)

Version	Article number	RRP
Standard		
Fully integrated	4110800011	**$2,999**

All dishwashers are shown with integrated joinery panel for illustration purposes only. Not supplied.

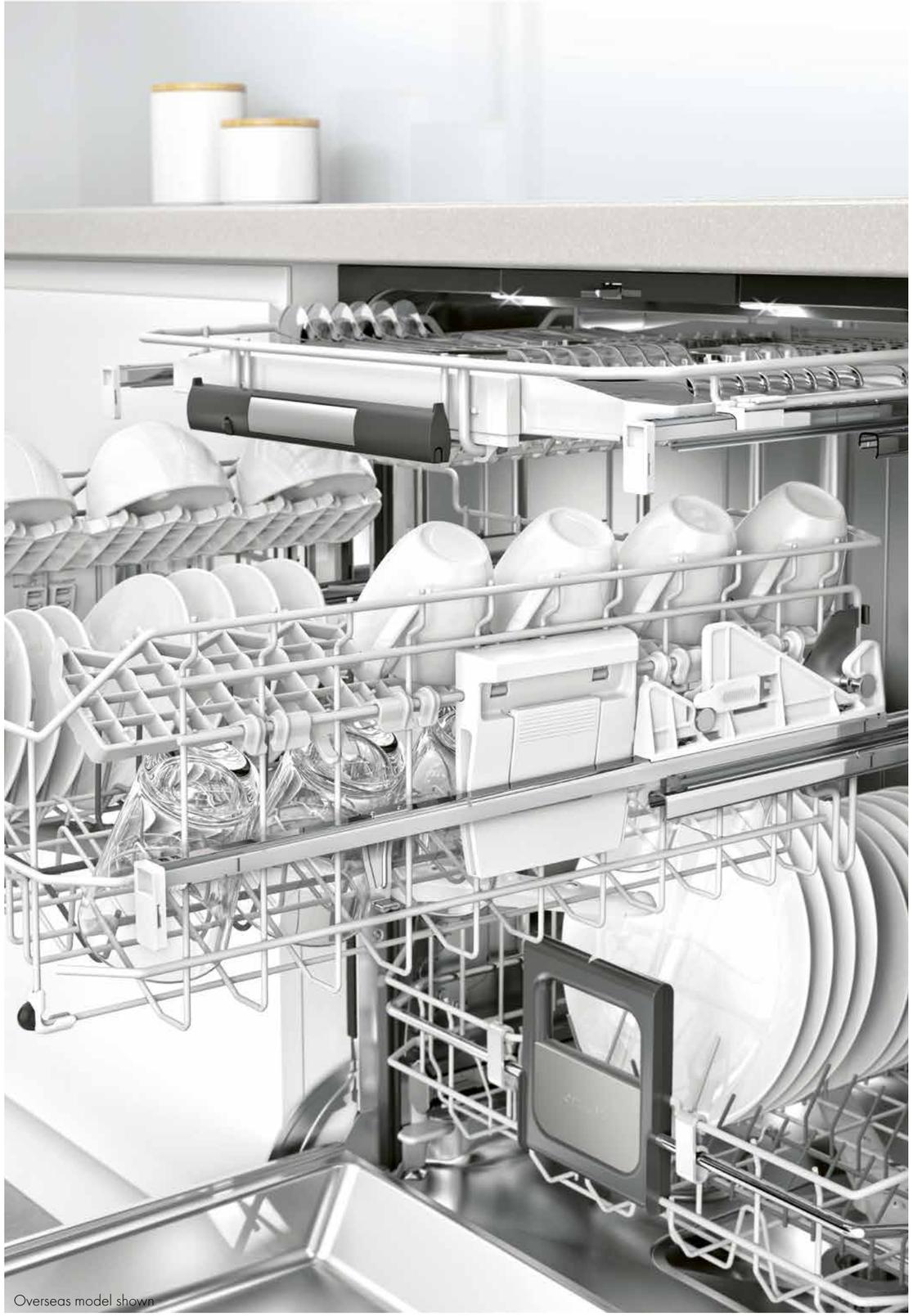

Overseas model shown

Dimensions

AdoraDish V6000, V2000 (previously Adora SL, Adora N)

«Standard» under-counter installation

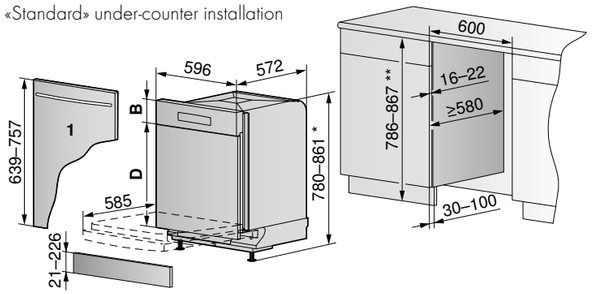

Applies to the article numbers below

V6000	V2000
4111800013	4110800011

* From 861 up to max. 896, only with second runner, order under W82930

** From 867 up to max. 902, only with second runner, order under W82930

Mass A in mm	Niche height H in mm 790	800	810	820	830	840	850	860	870	880	890	900	min. S in mm
min.	27	37	47	57	67	77	87	97	107	117	127	137	2
	37	47	57	67	77	87	97	107	117	127	137	147	2
	47	57	67	77	87	97	107	117	127	137	147	157	2
	57	67	77	87	97	107	117	127	137	147	157	167	2
	67	77	87	97	107	117	127	137	147	157	167	177	2
	77	87	97	107	117	127	137	147	157	167	177	187	2
	87	97	107	117	127	137	147	157	167	177	187	197	2
	97	107	117	127	137	147	157	167	177	187	197	207	2
	107	117	127	137	147	157	167	177	187	197	207	217	5
	117	127	137	147	157	167	177	187	197	207	217	227	10
	127	137	147	157	167	177	187	197	207	217	227	237	15
	137	147	155	167	177	187	197	207	217	227	237	247	23
max.	145	155	165	175	185	195	205	215	225	235	245	255	30

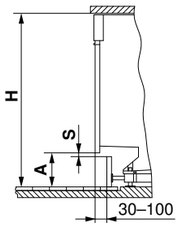

«Standard»	Nero, white	ChromeClass	Mirror glass
Operating panel B incl. compensator	124 - 146 mm	124 - 140 mm	124 - 140 mm
Decorative element D	490 - 632 mm	496 - 632 mm	496 - 632 mm

AdoraDish V6000 (previously Adora SL)

«Extra-height» under-counter installation

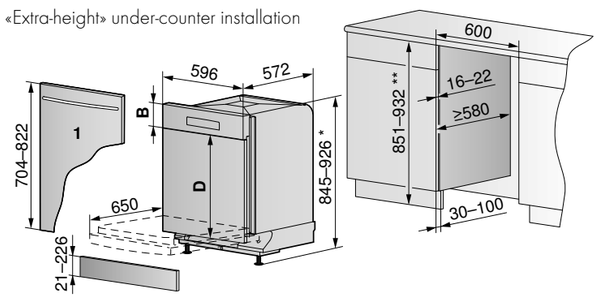

Applies to the article numbers below

V6000

4112000009

* From 926 up to max. 961, only with second runner, order under W82930

** From 932 up to max. 967, only with second runner, order under W82930

Mass A in mm	Niche height H in mm 851	860	870	880	890	900	910	920	930	940	950	960	min. S in mm
min.	23	32	42	52	62	72	82	92	102	112	122	132	2
	33	42	52	62	72	82	92	102	112	122	132	142	2
	43	52	62	72	82	92	102	112	122	132	142	152	2
	53	62	72	82	92	102	112	122	132	142	152	162	2
	63	72	82	92	102	112	122	132	142	152	162	172	2
	73	82	92	102	112	122	132	142	152	162	172	182	2
	83	92	102	112	122	132	142	152	162	172	182	192	2
	93	102	112	122	132	142	152	162	172	182	192	202	2
	103	112	122	132	142	152	162	172	182	192	202	212	5
	113	122	132	142	152	162	172	182	192	202	212	222	10
	123	132	142	152	162	172	182	192	202	212	222	232	15
	133	142	152	162	172	182	192	202	212	222	232	242	23
max.	141	150	160	170	180	190	200	210	220	230	240	250	30

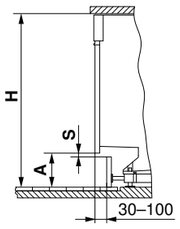

«Extra-height»	Nero, white	ChromeClass	Mirror glass
Operating panel B incl. compensator	124 - 146 mm	124 - 140 mm	124 - 140 mm
Decorative element D	555 - 697 mm	561 - 697 mm	561 - 697 mm

AdoraDish V6000 with heat pump (previously Adora SL WP)

Base element

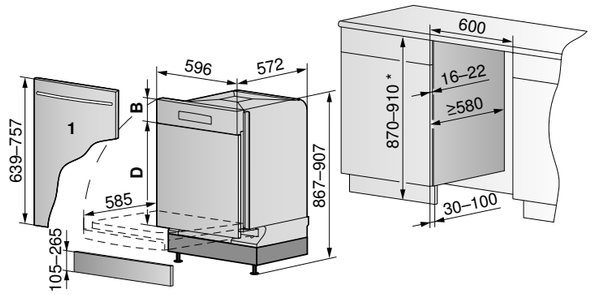

Applies to the article numbers below

Adora V6000

4112100007

* If the niche height is more than 910 mm, a panel must be placed underneath or an oversized decorative element must be used.

Mass A in mm	Niche height H in mm 870	880	890	900	910	min. S in mm
min.	107	117	127	137	147	2
	117	127	137	147	157	2
	127	137	147	157	167	2
	137	147	157	167	177	2
	147	157	167	177	187	2
	157	167	177	187	197	2
	167	177	187	197	207	2
	177	187	197	207	217	2
	187	197	207	217	227	5
	197	207	217	227	237	10
	207	217	227	237	247	15
	217	227	237	247	257	23
max.	225	235	245	255	265	30

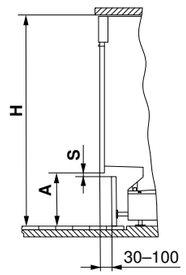

You can find more detailed information at **vzug.com**

AdoraDish V6000, V2000

«Standard» installation in tall units

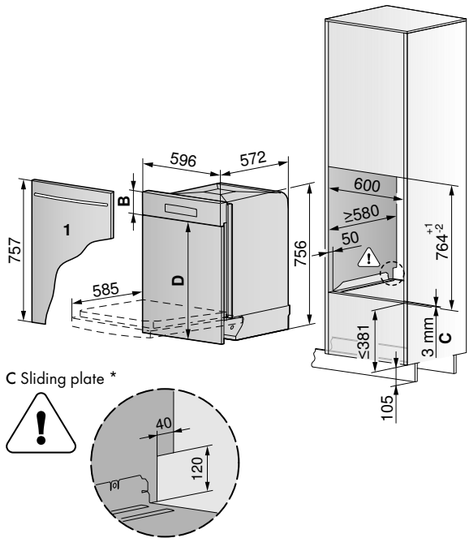

Applies to the article numbers below

V6000	V2000
4111800013	4110800011

«Standard»	Nero, white	ChromeClass	Mirror glass
Operating panel B incl. compensator	124–146 mm	124–140 mm	124–140 mm
Decorative element D	610–632 mm	616–632 mm	616–632 mm

AdoraDish V6000

«Extra-height» installation in tall units

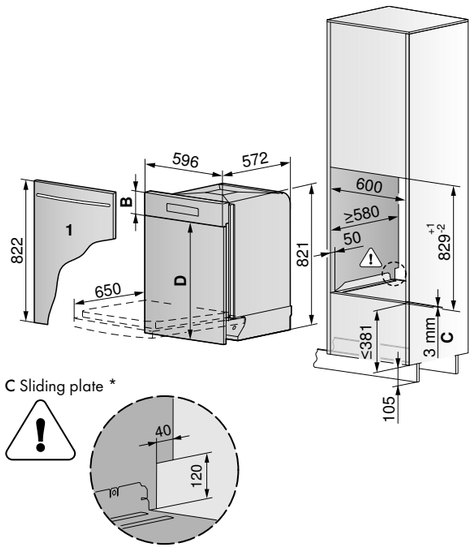

Applies to the article numbers below

V6000

4112000009

«Extra-height»	Nero, white	ChromeClass	Mirror glass
Operating panel B incl. compensator	124–146 mm	124–140 mm	124–140 mm
Decorative element D	675–697 mm	681–697 mm	681–697 mm

AdoraDish V6000 with heat pump (previously Adora SL WP)

Installation in tall unit

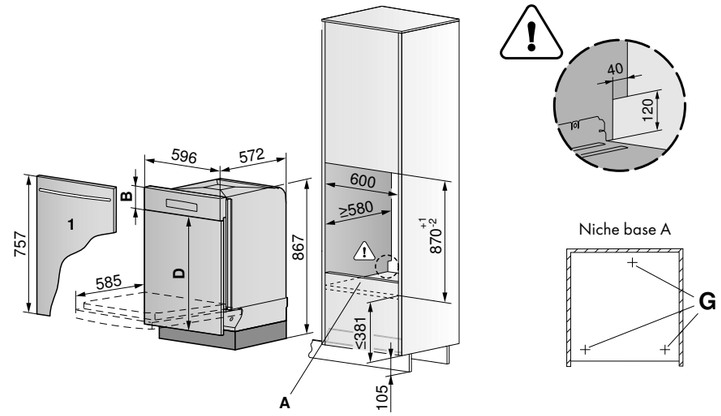

Applies to the article numbers below

Adora V6000

4112100007

* Load capacity of niche floor A: 100 kg

** At a load of 75 kg per appliance foot G, the niche floor may only bend by a maximum of 1 mm.

Dishwashers accessories

1

2

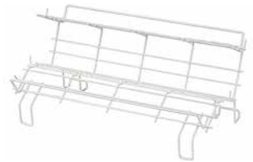

3

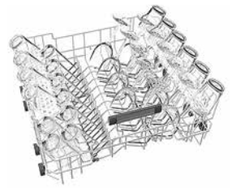

4

5

Description	Item no.	V6000Vi OptiLift cutlery drawer	V6000 Vi	V4000/6000 with cutlery drawer	V4000 integrated extra-height	V4000 Vi	V2000 Vi
1 Adjustable cutlery basket insert	W83586		▲		■	■	■
2 Accessories set, lower basket for glasses	1015132		■	■	■	■	
3 Extra cup support for lower basket	W83934		■	■	■	■	■
4 Lower basket for glasses	1013007	■	■	■	■	■	■
5 Set of 4 easy prongs	W83899	▲	▲	▲	▲	▲	▲

▲ included as standard ■ compatible with appliance *Usage for heavy front installation, please contact V-ZUG Service for installation.

Supreme Cooling

Excellent design, luxury finishes, powerful performance:
the coolest appliances in the kitchen.

A new dimension in cooling

Meet V-ZUG's Supreme cooling range. The V6000 range features the CombiCooler Supreme, the Cooler Supreme, the Freezer Supreme and the WineCooler Supreme.

With signature V-ZUG luxury, the food preservation and wine conditioning range also delivers on capacity, flexibility and performance.

As always, forward thinking demands consideration in the materials used, ensuring sustainability through a product built to last.

Consider stand alone or side by side solutions for your space, in either fully integrated or robust stainless steel options. Partner them with our signature cooking and fabric care range to set yourself apart from the rest.

Superlative design and technology

- Up to 626 litres usable capacity
- Full graphic TFT touchscreen display
- Pared-back contemporary design
- High-quality finish featuring chrome steel
- Easy reorganisation with InfinityShelf
- Full view thanks to SoftTelescope drawers
- Refrigerators with ClimateControl keep perishables fresh
- CombiCooler with MonoFridge: converts freezer compartment into normal refrigeration section
- CombiCooler and Freezer models with integrated IceMaker and mains water connection
- WineCooler with extendable wooden shelves and humidity control

Features at a glance

MonoFridge

A personalised option that can be tailored to suit your needs at the touch of a button. Convert the space easily to a chiller for your drinks when entertaining or to a freezer to preserve food after a trip to the market. The ultimate in flexibility.

Ice on Call

The Supreme CombiCooler and Freezer models provide ice on call with its integrated ice maker. The ice cube dispenser refills automatically, once connected to your water supply, ensuring you are always ready to be refreshed.

Temperature control

Control the temperature zones in your fridge and freezer compartments separately for complete flexibility. Find just the right setting to ensure your food and drink is stored and served just as you like it.

SoftTelescope

Using SoftTelescope, drawers can be fully extended, keeping you organised and allowing you to easily find what you need. Soft touch, self closing draw runners provide an additional layer of luxury and practicality that you will feel every time you open and close.

ClimateControl

Active air circulation ensures accurate and even temperature distribution throughout the fridge, whilst preventing the formation of ice crystals. Taking this innovation further, the system collects excess moisture and re-circulates it back into the fridge. The result is food that stays fresher and hydrated for longer.

Touch control

Intuitive and stylish. With an easy touch you can change your settings and adjust your temperature. Everything is at your fingertips.

InfinityShelf

The unique shelving system found in the Cooler and CombiCooler is easily personalised. Suspended on sliding tracks, the shelves can be freely positioned at your desired level, even when stocked. With no pre-defined heights or limitations it provides complete customisation for your food storage.

Graphic display

Sophisticated and functional. The high quality graphic displays enhances the design whilst making it simple to see what selections are made.

CombiCooler V6000 Supreme

IceMaker

CombiCooler V6000 Supreme

Covering all bases: a combination of fridge and freezer boasting luxury in design and quality.

Features

Attributes

- Total capacity 561 l
- Usable capacity of fridge compartment 427 l
- Usable capacity of freezer compartment 134 l
- Lighting LED
- Quick freezing
- Quick cooling
- Sabbath mode
- Holiday function
- Graphic display, touchscreen
- TouchControl
- Water filter
- Noise emissions 42 dB(A)

Appliance information

Appliance size	2050×887×615 mm	
Connection	220-240V~	10 A
Energy Rating	Australian rating TBC	

Version	Item Number	RRP
Fully integrated		
Door hinge: Left	5109600011	**$19,999**
Door hinge: Right	5109600010	**$19,999**

Fixed water connection

Optional accessory: Stainless steel front panel available.
Shown with optional stainless steel door option

Cooler V6000 Supreme

Cooler V6000 Supreme

The big chill: with its unique shelf system, this refrigerator allows you to configure the ample space to store all your food and beverages just as you like.

Features

Attributes

- Total capacity 626 l
- Usable capacity of fridge compartment 626 l
- Lighting LED
- Quick cooling
- Sabbath mode
- Graphic display, touchscreen
- TouchControl
- Noise emissions 41 dB(A)

Appliance information

Appliance size	2050×887×615 mm	
Connection	220-240V~	10 A
Energy Rating	Australian rating TBC	

Version	Item Number	RRP
Fully integrated		
Door hinge: Left	5109800011	**$14,999**
Door hinge: Right	5109800010	**$14,999**

Optional accessory: Stainless steel front panel available.

Freezer V6000 Supreme

Freezer V6000 Supreme

Freezing with style: with its large usable capacity and integrated IceMaker, this freezer can be combined with other appliances in the Supreme Line for a perfect side-by-side solution.

Features

Attributes

- Usable capacity of freezer compartment 359 l
- Lighting LED
- Quick freezing
- Water filter
- Sabbath mode
- Graphic display, touchscreen
- TouchControl
- Noise emissions 42 dB(A)

Appliance information

Appliance size	2050×587×615 mm	
Connection	220-240V~	10 A
Energy Rating	Australian rating TBC	

Version	Item Number	RRP
Fully integrated		
Door hinge: Left	5109900011	**$14,999**
Door hinge: Right	5109900010	**$14,999**

Fixed water connection

Optional accessory: Stainless steel front panel available.

WineCooler V6000 Supreme

WineCooler V6000 Supreme

Sophisticated features and plenty of space: this luxurious cooler can store your finest vintages at the perfect temperature.

Attributes

- Twin temperature zones
- Total capacity 350 l
- Wine bottle capacity 72
- Timber shelving
- Lighting LED
- Circuit for permanent indoor illumination
- Sabbath mode
- Graphic display, touchscreen
- TouchControl
- Humidity control
- Noise emissions 42 dB(A)

Appliance information

Appliance size	2050×587×615 mm	
Connection	220-240V~	10 A

Version	Item Number	RRP
Fully integrated		
Door hinge: Left	5109700012	**$14,999**
Door hinge: Right	5109700011	**$14,999**

Optional accessory: Stainless steel front panel available.

Dimensions

CombiCooler V6000 Supreme

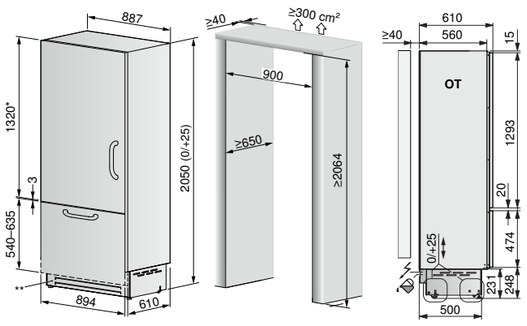

For height >2064, double door height must be adjusted.

Cooler V6000 Supreme

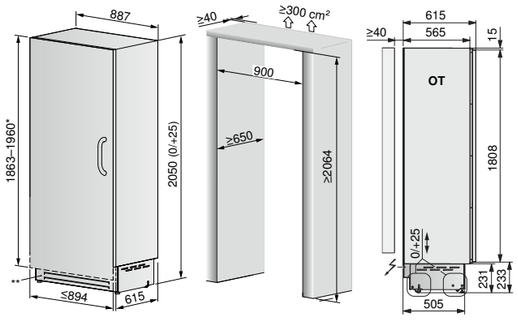

For heights >2064, the arrangement of the holes on the double door and the double door height must be adapted (see installation instructions).

FreezerV6000 Supreme

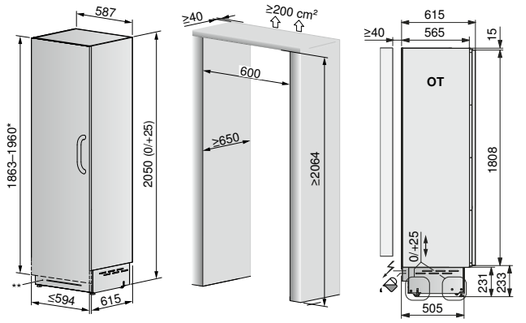

For heights >2064, the arrangement of the holes on the double door and the double door height must be adapted (see installation instructions).

WineCooler V6000 Supreme

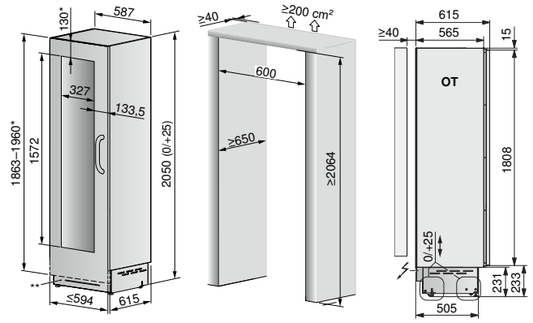

For heights >2064, the arrangement of the holes on the double door and the double door height must be adapted (see installation instructions).

Supreme Cooling accessories

	Accessories	Item No.	CombiCooler V6000 Supreme	Cooler V6000 Supreme	Freezer V6000 Supreme	WineCooler V6000 Supreme
1	Stainless steel front panel set, right		■			
2	Stainless steel front panel set, left		■			
3	Stainless steel front panel set, right					■
4	Stainless steel front panel set, left					■
5	Stainless steel front panel set, right			■		
6	Stainless steel front panel set, left			■		
7	Stainless steel front panel set, left				■	
8	Stainless steel front panel set, right				■	
9	Organizer set		■	■		
10	Water filter		■		■	

■ compatible with appliance

1 – 8

9

10

Fabric Care

Premium washers and dryers that care for your clothes and your world with their innovative and energy efficient design and technology.

AdoraWash V6000 designed for today and tomorrow

The AdoraWash V6000 delivers on our commitment to providing lifestyle solutions that also consider the world in which we live. The first in Australia to receive a 5½ star energy rating, with consumption of just 148 kWh per year, you can feel confident you have made a considered choice. When you combine the high level functionality and premium Swiss made attention to detail with the focus on the bigger picture it's a wise investment in your fabrics and the future.

The heat pump design ensures that the water is heated with energy efficiency front of mind, reducing the required energy by up to 55% depending on the program selected. In addition, tools like OptiTime and EcoManagement provide the ability to consider the wash cycle and time available in order to decipher the most environmentally friendly option. The Adora Wash V6000 offers innovative design, exceptional quality and thoughtfully considerate technology for today and tomorrow.

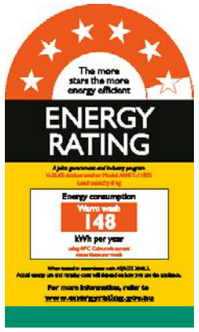

V-ZUG EcoManagement

Before every wash cycle, the V-ZUG EcoManagement system quickly displays the expected water and energy consumption on the appliance in a simple format. Once the programme has finished, the actual water and electricity consumption values (litres/kWh) are shown, along with other statistics.

V-ZUG OptiTime – delayed start saves energy by making the best use of the time available

OptiTime takes the conventional delayed start function and makes it intelligent. It automatically reduces energy requirements by making the best use of the time available. All fabrics are gently cleaned to perfection, only spending as much time as the programme requires in the suds. V-ZUG OptiTime is a valuable part of our commitment to protecting the environment.

Designed for the ultimate in care.

The Adora range of washers and dryers offer a range of unique programs that can be tailored to protect even your most delicate of fabrics. Innovation in efficiency is also at the fore reducing water, energy and chemical use.

With specific programs for almost any fabric type you can think of, caring for your everyday and occasional garments is no longer a chore. Tailor and adjust to suit your needs or use a quick sprint for everyday, all the while knowing you are reducing water and energy consumption. So many reasons to feel good about doing the laundry.

Sophisticated technology that's simple to use

Designed and built in Switzerland the quality, durability and innovation of the Adora fabric care range speaks for itself.

TouchDisplay with pivoting panel

All Adora washers and dryers have a full colour touch display for ease of use. Select, adjust and set your desired program quickly and intuitively. The unique panel can be tilted 45 degrees for improved better visibility and ergonomic operation. In cases where appliances are stacked, the display on the dryer can be further optimized to make it easier to read.

Let there be light

All Adora fabric care options are equipped with LED lighting that illuminates the entire drum, helping to ensure no small garments are left inside. The light comes on automatically whenever the door is opened, but can also be switched on at the touch of a button. LED drum lighting is maintenance-free and durable.

Gentle washing thanks to the Vibration Absorbing System

All Adora washing machines deliver a particularly gentle, low-vibration wash thanks to the exclusive V-ZUG Vibration Absorbing System (VAS). Since clothes tend to be unevenly distributed in the drum, spinning automatically can lead to imbalance and vibrations. Our unique system reduces the amount of movement and vibration using sensors to detect the size and location of the fabrics during the spin cycle. The drum features compartments that can hold water and when necessary, they quickly fill with water to balance out the load, delivering a more consistent spin speed, reducing noise and ensuring minimal wear and tear on your machine.

Vibration Absorbing System

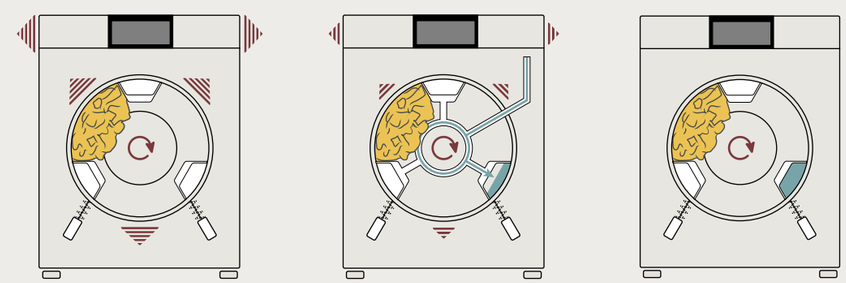

Unequally distributed loads cause imbalances and vibration.

The sensors measure the imbalance and compensate for it with water.

The Special Care Drum now operates quietly and in balance.

Wide range of wash programmes for every need and every garment

The Adora programmes ensure an effective and particularly gentle wash. Special programmes such as Anti-mite and Steam anti-crease are even more convenient.

Steam anti-crease – virtually non-iron

Steam anti-crease makes ironing unnecessary in most cases. Steam enters the Special Care Drum through tiny openings and removes creases from garments. Steam anti-crease can be selected in addition to almost all programmes. The Steam anti-crease Plus programme takes the creases out of fabrics such as linen.

FirstWash – for new clothes

FirstWash gently prepares new garments for their first wearing. This short programme cleans the new fabrics, removing chemicals and other residues.

Anti-mite and Skin protection to reduce allergens

The anti-mite programme removes up to 100% of mites from fabrics, thus eliminating triggers for allergies and respiratory problems. This anti-mite option can be selected for washes at between 60 and 95 °C. The skin protection function also helps allergy sufferers and people with sensitive skin. This consists of two additional rinses in a greater volume of water.

WetClean – gentle cleaning

WetClean treats fine and delicate garments more gently than hand washing. Even the most delicate fabrics can therefore be cared for in the washing machine.

Favourites – find your favourite program with single press

The six most-used programmes can be stored with the favourites function. The favourite programmes can thus be called up quickly and easily – and changed at any time if required.

Sprint – clean in less than 30 minutes

Lightly soiled laundry such as sportswear can be washed very quickly. A wash cycle takes 28 minutes at 40 °C and 39 minutes at 60 °C*. This additional programme is ideal for people in a hurry. If there is more time available, the Eco programmes and OptiTime are a more resource-friendly choice.

*With a 400V / 16A connection

Hygiene - maintain and clean your appliance

Over time, germs and unpleasant smells can build up in the washing machine. To prevent this, we developed the hygiene recommendation. The appliance issues an alert if a programme at a temperature of at least 60 °C has not been used for some time, and recommends running the appliance hygiene programme (without laundry). Alternatively, a regular wash at a temperature of at least 60 °C can be run. The washing machine thus remains hygienically clean throughout its entire service life.

Variety of drying programmes

Adora heat pump dryers have the ideal program for all your needs. Gentle on your garments and market leading energy efficiency.

Sprint or Eco – fast or energy-saving

The additional Sprint programme dries fabrics as quickly as possible. If there is more time available, the Eco programme is the most resource-friendly choice.

Fabric types – the right care for every material

The optimum care for every item of laundry can be selected using the appropriate button for that fabric type. There are programmes for fabric types such as silk, denim, bed linen, towelling and more.

Woollens – gentle and caring

The woollens programme dries gently by spinning the drum slowly at low temperatures, making it ideal for soft woollens.

Fluffing programme – as good as new

With this speedy yet highly efficient finishing programme, fabrics feel as fresh and fluffy as new. By applying heat in careful doses, it loosens the fibres and fluffs them up.

Ultra care – for especially delicate fabrics

Low temperatures and a short programme cycle make all the difference.

Basket programme – gentle drying without turning

The practical drying basket protects shoes, gloves, soft toys and other items that need to be held still inside the machine, keeping things quiet and reducing unnecessary movement. The basket is available as an accessory to the range.

Crease guard – reduces the need for ironing

The Crease guard programme is particularly suitable for blouses, shirts, T-shirts and cotton trousers. After a 20-minute programme using gentle heat, the items can be left to dry completely on the hanger.

Favourites – find your favourite program with single press

The six most-used programmes can be stored with the favourites function allowing easy access to the things you need everyday.

Easy to clean

Cleaning the Adora heat pump dryer is straightforward: Lint and fluff on the door lint filter can simply be wiped away at the end of the drying cycle. The filter pad in the door can be removed, if necessary, and washed in the washing machine. Meanwhile, the spare filter pad (included on delivery) can be used.

Product comparison
Adora washing machines

	AdoraWash V6000	AdoraWash V2000
Features		
Energy efficiency rating	148 kWh per year	291 kWh per year
Energy Star Rating	5 ½ star	4 star
Water Efficiency Rating	72L per wash (4 stars)	77L per wash (4 stars)
Spin speed (rpm)	400-1600	400-1400
Load (kg)	1-8	1-8
Door hinge	l/r	l/r
Door	Chrome	White
Heat pump technology	■	
Aquastop	■	■
Drum lighting	■	■
Noise output during washing phase dB(A)	49	48
Noise output during spin phase dB(A)	72	74
Settings		
Vibration Absorbing System (VAS)	■	■
Partial load automatic energy saving	■	■
Add items	■	■
Soak	■	
Childproof lock	■	■
Turbidity sensor	■	
Flow circulation	■	
Steam anti-crease	■	
FirstWash	■	
Sprint programmes 20-60 °C	■	■
Favourites	■	■
Fabric types	■	
Extra programmes	■	
Hygiene recommendation	■	■
Appliance hygiene	■	
Anti-mite	■	
Degree of soiling	■	
EcoFunction	■	
EcoManagement	■	
OptiTime	■	
WetClean	■	
Operation		
Pivoting operating panel	■	■
Full-colour touchscreen	■	■
Multi language option	■	■
Delayed start (up to 24 hrs)	■	■

Product comparison
Adora tumble dryers

	AdoraDry V6000	AdoraDry V2000
Features		
Energy efficiency rating	73 kWh per year	123 kWh per year
Energy Star Rating	10 star	7 star
Load (kg)	1-7	1-7
Door hinge	l/r	l/r
Floor-standing appliance, stackable	■	■
Noise output dB(A)	62	63
Electronic moisture measurement	■	■
Electronic load measurement	■	
Heat pump technology	■	■
Settings		
Basket programme	■	■
Childproof lock	■	■
Extra dry	■	■
Standard dry	■	■
Iron dry	■	■
Damp	■	■
Sprint	■	
Crease guard programme	■	
Easy care	■	■
Ultra care	■	
Woollens	■	
ReversePlus	■	■
Favourites	■	■
Fabric types	■	■
Eco	■	
EcoManagement	■	■
SilentPlus dB(A)	60	
Timed drying	■	■
Operation		
Pivoting operating panel	■	■
Full-colour touchscreen	■	■
Multi language option	■	■
Delayed start (up to 24 hrs)	■	■

The world's first with heat pump technology

AdoraWash V6000

This premium appliance caters to every need and offers a variety of programmes for all types of laundry.

Operating modes

Operation and display

- TouchControl
- Full-colour graphic display, touchscreen
- Pivoting operating panel
- Automatic door opener
- Opening 35 cm
- Door opening angle 180°
- Installation plate*
- Drum lighting

Appliance information

Appliance size	850 × 595 × 592 mm		
Connection	220-240V~	2100 W	10 A

Version	Item number	RRP
Standard appliance		
Door hinge: Left	1102565024	**$5,999**

Hinge side can be changed on request

AdoraDry V6000

This premium appliance caters to every need and offers a variety of programmes for all types of fabric.

Operating modes

Operation and display

- TouchControl
- Full-colour graphic display, touchscreen
- Pivoting operating panel
- Opening 42 cm
- Door opening angle 180°
- Installation plate*
- Direct drainage
- Drum lighting

Appliance information

Appliance size	850 × 595 × 600 mm		
Connection	220-240V~	1050 W	10 A

Version	Item number	RRP
Standard appliance		
Door hinge: Right	1201365014	**$4,999**

Hinge side can be changed on request

*Always install with included installation plate (refer to installation instructions)

AdoraWash V2000

Your everyday functional option with proven Swiss quality.

Operating modes

Operation and display

- TouchControl
- Full-colour graphic display, touchscreen
- Pivoting operating panel
- Automatic door opener
- Opening 35 cm
- Door opening angle 180°
- Installation plate (refer installation instructions)
- Drum lighting

Appliance information

Appliance size	850 × 595 × 592 mm		
Connection	220-240V~	2300 W	10 A

Version	Item number	RRP
Standard appliance		
Door hinge: Left	1102165024	**$3,499**

Hinge side can be changed on request

AdoraDry V2000

Ttraditional quality, manufactured in Switzerland – just like all other Adora tumble dryers.

Operating modes

Operation and display

- TouchControl
- Full-colour graphic display, touchscreen
- Pivoting operating panel
- Opening 42 cm
- Door opening angle 180°
- Installation plate (refer installation instructions)
- Direct drainage
- Drum lighting

Appliance information

Appliance size	850 × 595 × 600 mm		
Connection	220-240V~	750 W	10 A

Version	Item number	RRP
Standard appliance		
Door hinge: Right	1201165014	**$3,499**

Hinge side can be changed on request

Adora V2000 Fabric Care Programs

AdoraWash V2000	AdoraDry V2000
Coloureds (1 - 8 kg)	Coloureds (1 - 7 kg)
Woollens (1 - 2.5 kg)	Shirts (max. 7 items)
Hand wash (1 - 2 kg)	Denim (1 - 4 kg)
	Silks (1 - 1.5 kg)
	Baby garments (1 - 1.5 kg)

Adora V6000 Fabric Care Programs

AdoraWash V6000	AdoraDry V6000
Coloureds (1 - 8 kg)	Coloureds (1 - 7 kg)
Woollens (1 - 2.5 kg)	Shirts (max. 7 items)
Hand wash (1 - 2 kg)	Denim (1 - 4 kg)
Shirts (max. 7 items)	Silks (1 - 1.5 kg)
Down (max. 1 kg)	Baby garments (1 - 1.5 kg)
Outdoor (1 - 3 kg)	Bed linen (1 - 3 kg)
Silks (1 - 1.5 kg)	Down thick (1 - 2 kg)
Net curtains (1 - 2 kg)	Down thin (1 - 2 kg)
Baby garments (1 - 5 kg)	Outdoor (1 - 3 kg)
Denim (1 - 4 kg)	Woollens (1 kg)
FirstWash (1 - 2 kg)	Towelling (1 - 3 kg)
Black garments (1 - 4 kg)	Fleece (1 kg)
Underwear (1 - 3 kg)	Hygiene (1 - 3 kg)
Black hand wash (1 - 2 kg)	WetClean (1 kg)
WetClean (1 kg)	

Adora Fabric Care accessories

1

2

Description	Item no.	AdoraWash V6000	AdoraWash V2000	AdoraDry V6000	AdoraDry V2000
1 Adora convenient storage drawer	W31357	■	■	■	■
2 Drying basket	W55884			■	■
3 Pronto Combi Kit - Drainage Set (not pictured)	W55969	■	■	■	■

■ compatible with appliance

Dimensions

AdoraWash V6000, V2000

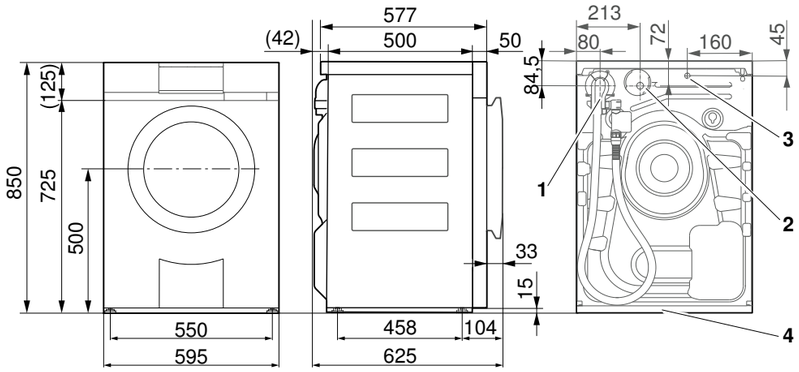

1 Connection for cold water; inlet hose with Aquastop, length: 1.25 m, G¾"
2 Connection for drain hose with bend, length: 1.5 m pump feed height: 1.2 m
3 Outlet for electrical connection cable, length: 1.8 m, with plug
4 Installation plate

Applies to the item numbers below

V6000	V2000
1102565024	1102165024

AdoraDry V6000, V2000

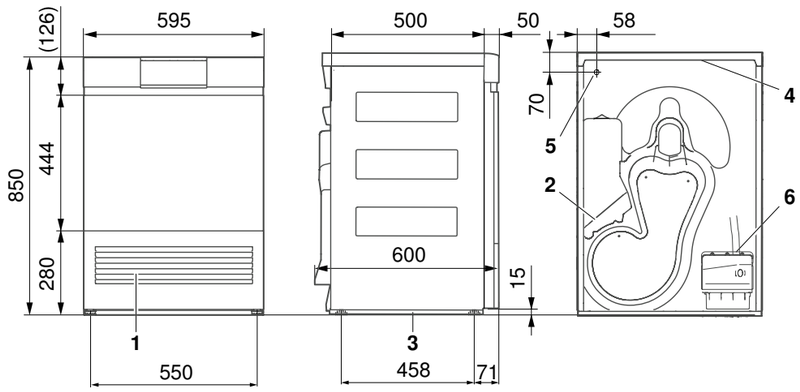

1 Cooling air inlet
2 Cooling air outlet
3 Installation plate
4 Tower panel
5 Outlet for electrical connection cable, length: 1.8 m, with plug
6 Condensation drain fitting: ø10.5 mm, pump feed height: 1.2 m, condensation drainage set length: 2 m

Applies to the item numbers below

V6000	V2000
1201365014	1201165014

You can find detailed planning information on our website.

RefreshButler

A statement in innovation, design and luxury that takes caring for your special garments to a new level.

A revolutionary solution for

fabric care and hygiene

Refresh Butler is an innovative fabric care appliance for private homes.
It provides a gentle solution to refresh, sanitise and dry your designer garments, often replacing the need for dry cleaning.
The process does not use any chemicals or mechanical friction. As a result, your clothes will maintain their natural look and feel, prolonging their life without harming the environment.

How does it work?

Refresh Butler uses steam and a patented photocatalysis system to effectively eliminate odours. A flow of air at low temperatures replicates the mountain winds in the Swiss alps. This world exclusive process helps to gently care for your best clothes.

Fresh, sanitised clothes without washing

The RefreshButler neutralises odours, removes bacteria and dries damp clothes.

Suits, dresses and other delicate fabrics are gently refreshed after wearing, and creases removed. The RefreshButler eliminates up to 99.99 % of all germs. Sports clothes and trainers can be quickly dried in the RefreshButler. Simply hang up coats and delicate items on the clothes hangers provided.

The RefreshButler is operated by means of an intuitive TouchDisplay. True-colour LED lighting provides a clear view inside. The interior is fitted with folding clothes rails, high-quality hangers and a basket for small garments.

The RefreshButler can be installed as a free-standing item or built in.

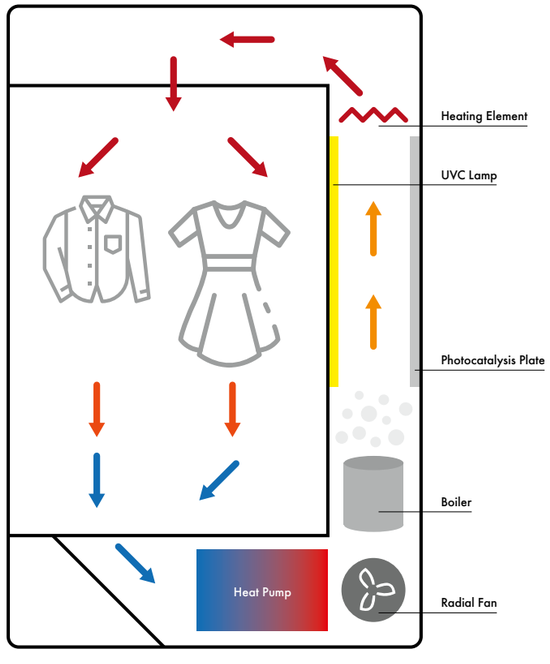

Gentle Heat is generated efficiently via the Heat pump for delicate drying while a separate boiler creates fine steam to delilcately loosen the fibre in the fabric.

Support from the fan provides air flow circulating the heat and the steam.

The steam and warm air pass through your garments removing impurities and odours and helping to release creases. A UV lamp combines with the air and steam, alongside a catalytic filter, eliminiating bacteria

Exclusive programmes for delicate fabrics

The RefreshButler's refresh, crease guard, drying and hygiene programmes care for valuable clothes as gently as possible.

Refresh

The refresh programme neutralizes odours such as cooking smells and cigarette smoke without the use of chemicals.

Photocatalysis technology and steam are used to remove and gradually dissipate the odour molecules from the fabrics.

The additional crease guard function greatly reduces creases and wrinkles in the elbows, crotch area and knees of your suits, for example.

Hygiene

The hygiene programme eliminates up to 99.99 % of germs and bacteria.

Drying

Warm air quickly dries fabrics and shoes (not fur or leather) in the RefreshButler without any mechanical action.

RefreshButler

RefreshButler V6000

For clean, hygienic and fresh clothes. Freestanding or integrated.

Operating modes

Attributes

- TouchControl
- Lighting LED
- Folding clothes rail
- Easy Breathe Coat Hangers (5 incl.)
- Basket for smaller items of clothing
- Fresh water tank
- Condensed water tank

Appliance information

Appliance size	1960 × 775 × 570 mm		
Connection	220-240V~	1200 W	10 A

Version	Item number	RRP
Standard appliance		
Stainless steel	1400365003	**$29,999**
Black/Integrated	1400365000	**$29,999**

Dimensions

RefreshButler V6000

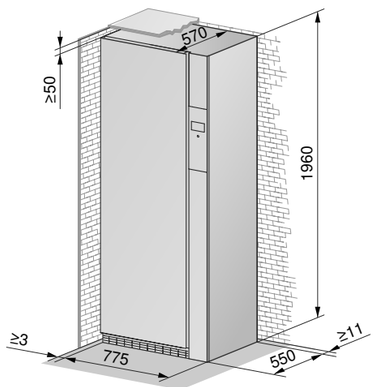

In cases where a free-standing RefreshButler is being installed, a clearance of at least 3 mm must be maintained between the appliance and the walls on the left and right.

RefreshButler Accessories

1

Description	Item no.	RRP
1 Easy Breathe Coat Hanger set (2)	W54789	$29

You can find detailed planning information on our website.

Accessories

Add something extra with our range of exclusive accessories to compliment your appliances.

Range hood and Extraction installation accessories

1

2

3

4

5

6

7

8

9

10

11

12

13

14

	Description	Item no.
1	Remote control (radio)	1046973
2	Recirculation box for base area with standard activated charcoal filter package, maintenance-free for approx. 3.5 years. For converting downdraft extractors and cooktop hoods to recirculation mode	1012161
3	Front plate, height 410–790 mm, ChromeClass, standard AiroClearCabinet V6000 DFPQ/DFPQSL	1046971
4	Long front plate, 791–1150 mm, AiroClearCabinet V6000/DFPQ/DFPQSL	1046972
5	Recirculation kit – wall unit panel with insulation pads for wall unit without panel	H42630
6	Kit for installing external motor within 4 m for DSTS	1012164
7	Combination base kit for cooktop combinations (x 2)	H63789
8	Aluminium insulation tape, 50 m roll, width 50 mm	H42067
9	Flat channel (width 222 mm/height 89 mm), length 1000 mm	1012780
10	Flex elbow, from round to flat for deflection and rotation up to 180° (width 227 mm/height 94 mm), length 160–550 mm/connection d=150 mm	1012787
11	Flex elbow, flat for deflection and rotation up to 180° (width 227 mm/height 94 mm), length 240–600 mm	1012786
12	Channel connector for straight flat channel, length 80 mm	1012781
13	Transition piece for flat channel, connection d=150 mm, length 190 mm	1012782
14	90° diverter piece, vertical to flat channel, connection d=150 mm, length=205 mm	1012783

1

2

3

4

5

6

7

8

9

10

11

12

13

14

15

16

17

18

	Description	Item no.
1	90° elbow, horizontal for flat channel (width 227 mm/height 94 mm), length 288 mm	1012784
2	90° elbow, vertical for flat channel (width 227 mm/height 94 mm), length 174 mm	1012785
3	Flat channel (width 222 mm/height 89 mm), length 500 mm	1046627
4	Flat channel (width 222 mm/height 89 mm), length 1000 mm	1046628
5	Reinforcing rib for flat metal duct (width 222 mm/height 89 mm/length 300 mm) to set in concrete (tread load up to 100 kg)	1077495
6	Flexible metal air duct (width 222 mm/height 89mm), length 500 mm	1046629
7	Flexible metal air duct (width 222 mm/height 89mm), length 1000 mm	1046635
8	Metal air duct connector, length 80 mm	1046636
9	90° diverter piece, vertical to flat channel, connection d=150 mm, length=205 mm	1046638
10	90° elbow, horizontal for flat channel (width 227 mm/height 94 mm), length 288 mm	1046639
11	90° elbow, vertical for flat channel (width 227 mm/height 94 mm), length 174 mm	1046643
12	Transition piece for flat channel, connection d=150 mm, length 190 mm	1046644
13	Air duct offset end piece, d=150 mm	1046649
14	Air duct pipe set for cooktop hood	1046650
15	Weather protection louvre, stainless steel with non-return flap, 290 × 160 mm for connection to flat channel (width 222 mm/height 89 mm)	1030590
16	Helically wound pipe, d=125 mm	H42028
17	Helically wound pipe, d=150 mm	H42029
18	Pipe clamp with thread, d=150 mm	H42050

	Description	Item no.
1	Hose clamp, d=110–130 mm	33121304
2	Hose clamp, d=150 mm	33121336
3	Connecting nipple, d=150 mm	H42031
4	Connecting pipe, d=125 mm	H42032
5	Connecting pipe, d=150 mm	H42033
6	90° elbow, d=125 mm	H42034
7	90° elbow, d=150 mm	H42036
8	Reduction, 150–125 mm	H42040
9	Pipe end piece, d=150 mm	H42048
10	Weather protection grille, round, aluminium, d=150 mm	H42064
11	Weather protection grille, white, plastic, square, d=150 mm	H42080
12	Telescopic wall tube with non-return flap, d=125 mm	H42065
12	Telescopic wall tube with non-return flap, d=150 mm	H42066
13	Non-return flap valve with seal lip, d=125 mm	H42061
13	Non-return flap valve with seal lip, d=150 mm	H42062
14	Aluminium hose, semi-flexible, length 3 m, d=125 mm	H42051
15	Aluminium hose, semi-flexible, length 3m, d=150 mm	H42052
16	Aluminium sound absorber, d=150 mm	1030591
17	Flat channel, length 1000 mm	H42068
18	Flat channel, length 600 mm	H42069

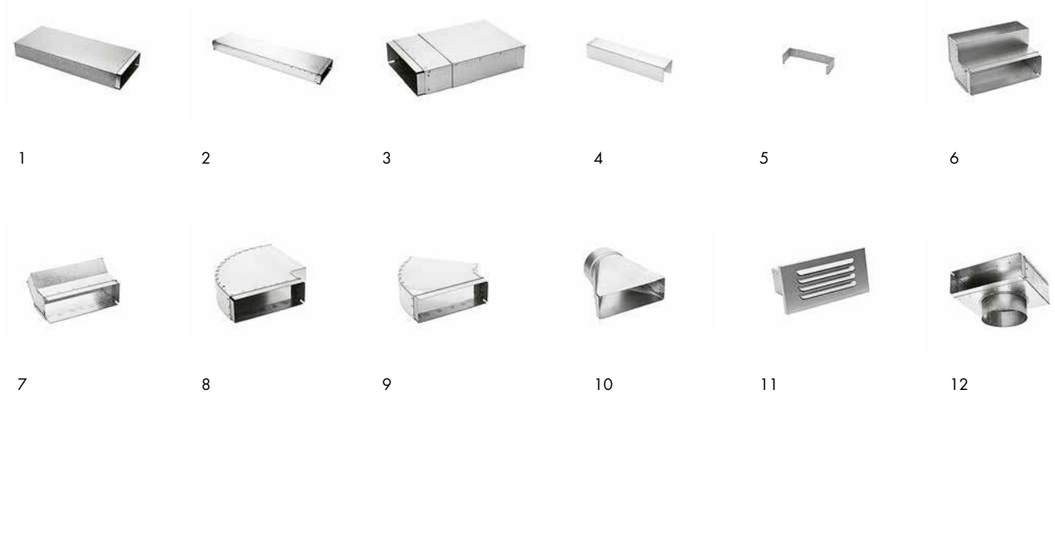

	Description	Item no.
1	Reinforced flat channel, length 600 mm	H42085
2	Reinforced flat channel, length 1000 mm	H42086
3	Telescope flat channel, length 275–535 mm	H42070
4	Reinforcing rib for flat channel, length 600 mm/1000 mm	H42071/H42072
5	Mounting bracket for flat duct	H42073
6	90° elbow, vertical, for flat channel	H42074
7	45° elbow, vertical, for flat channel	H42075
8	90 ° elbow, horizontal, for flat channel	H42076
9	45° elbow, horizontal, for flat channel	H42077
10	Junction piece round-flat, d=150 mm	H42078
11	Flat channel wall box	H42054
12	Diverter piece on flat channel, connection d=125 mm/d=150 mm	H42087/H42079

Operating Modes at a glance

Combi-Steam MSLQ

Steam combi mode
Ideal for preparing vegetables quickly and gently with PowerPlus.

Hot air humid combi mode
Optimally retains the food's moisture.

Hot air combi mode
Time-saving baking, cooking, roasting and desiccating.

Hot air with steaming combi mode
Accelerated cooking process by adding steam.

PizzaPlus combi mode
For particularly crispy pizza and pie bases.

Top/bottom heat combi mode
Traditional baking, cooking or roasting supported by PowerPlus.

Top/bottom heat humid combi mode
Retains the food's moisture in the oven.

Bottom heat combi mode
Perfect for finishing off pie bases with PowerPlus.

Grill/convection combi mode
Three functions in one – for quick, tasty results.

Grill combi mode
Time-saving grilling, toasting and gratinating.

PowerSteam
Rapid, gentle cooking using steam and microwave.

Microwave
For heating and defrosting food.

Regeneration combi mode
Warms up food gently without drying it out.

PowerRegeneration
The optimal combination for heating up pre-cooked meals.

EasyCook
Default settings for individual foods give optimum results.

GourmetGuide
Intelligent programmes automatically carry out complex cooking sequences.

Vacuisine
The gentle cooking of vacuum-sealed foods at low temperatures.

BakeOmatic with CCS
Recognizes the size and shape of the food and adjusts the time and temperature accordingly.

Professional baking
Baking with the automatic addition of moisture for optimum results.

Soft roasting
Gently cooking top-quality cuts of meat.

Automatic regeneration
Gently heats up ready meals and convenience products.

Defrosting
Gently defrosts food.

Favourites
Stores favourite programmes quickly and easily.

Own recipes
Store your own recipes on the appliance.

Recipes
Numerous recipes for inspiration.

Keep warm function
Keeps food warm straight after cooking.

Hygiene
For sterilizing containers, baby bottles and jam jars.

Wellness
For warming hot towels, hot compresses, hot stones, etc.

Plate warming
Handy way of warming dishes.

Fast heating
Oven is heated with hot air and bottom heat, speeding up preheating.

Auto-switch between summer/winter time
The time is automatically switched between summer and winter time.

V-ZUG-Home
Appliance is network-enabled.

Combi-Steamers and steam cookers

Steam
Ideal for gently cooking fresh vegetables.

Hot air humid
Retains the food's moisture content.

Hot air
Ideal for baking and roasting.

Hot air steam
Food is cooked evenly and more quickly, and remains moist.

PizzaPlus
For particularly crispy pizza and pie bases.

Top/bottom heat
Traditional baking, cooking and roasting.

Top/bottom heat humid
Retains the food's moisture content.

Grill with convection
For roasting larger cuts of meat.

Grill
Grilling and toasting flat foods.

Regeneration
Gently heats up frozen or cooked food.

EasyCook
Default settings for individual foods give optimum results.

GourmetGuide
Intelligent programmes automatically carry out complex cooking sequences.

Vacuisine
Slowly cooking vacuum-sealed foods at a low temperature.

BakeOmatic with CCS
Recognizes the size and shape of the food and adjusts the time and temperature accordingly.

Professional baking
Baking with the automatic addition of moisture for optimum results.

Soft roasting
Gently cooking top-quality cuts of meat.

Automatic regeneration
Gently heats up ready meals and convenience products.

Favourites
Stores favourite programmes quickly and easily.

Recipes
Numerous recipes for inspiration.

Own recipes
Store your own recipes on the appliance.

Keep warm function
Keeps food warm straight after cooking.

Hygiene
For sterilizing containers, baby bottles and jam jars.

Wellness
For warming hot towels, hot compresses, hot stones, etc.

Plate warming
Handy way of warming dishes.

Fast heating
Oven is heated with hot air and bottom heat, speeding up preheating.

Auto-switch between summer/winter time
The time is automatically switched between summer and winter time.

Defrosting
Gently defrosts food.

Steaming at 80 °C
The perfect temperature for steaming fish.

Steaming at 90 °C
The perfect temperature for steaming meat.

Steaming at 100 °C
The perfect temperature for steaming vegetables.

V-ZUG-Home
Appliance is network-enabled.

Ovens

Hot air humid
Ideal for baking and roasting – the food's moisture content is retained.

Hot air
Perfect for baking small pastries on several shelves at the same time.

PizzaPlus
For particularly crispy pizza and pie bases.

Top/bottom heat
Traditional baking, cooking or roasting on a shelf.

Top/bottom heat humid
Particularly suitable for baking multiple things on one shelf at the same time.

Top heat
For gratins and browning toppings.

Bottom heat
Perfect for finishing off pie bases and reducing liquids.

Grill with convection
Ideal for roasting larger cuts of meat.

Grill
Grilling, gratinating and toasting flat foods.

EasyCook
Default settings for selected foods for optimum results.

Soft roasting
Gently cooking top-quality cuts of meat.

GourmetGuide
Intelligent programmes automatically carry out complex cooking sequences.

BakeOmatic with CCS
Recognizes the size and shape of the food and adjusts the time and temperature accordingly.

Favourites
Stores favourite programmes quickly and easily.

Recipes
Recipes are provided on the appliance to inspire you when cooking.

Own recipes
Store your own recipes on the appliance.

Keep warm function
Keeps food warm straight after cooking.

Plate warming
Handy way of warming dishes.

Fast heating
Speeds up oven pre-heating.

Auto- switch between summer/winter time
The time is automatically switched between summer and winter time.

Pyrolysis
Easy cleaning, with dirt being converted into ash.

V-ZUG-Home
Appliance is network-enabled.

Warming drawers

Plate warming
Handy way of warming dishes.

Cup warmer
Ideal for cups and glasses.

Keep food warm
Keeps food warm straight after cooking.

Yoghurt making
The perfect way to make yoghurt.

Favourites
Stores favourite programmes quickly and easily.

Coffee-Centers

Coffee
The international version of the Italian espresso.

Espresso
Small cup of coffee with an intense taste.

2 cups
Double quantity – can be prepared in either one or two cups.

Cappuccino
Strong coffee taste together with frothy milk.

Latte macchiato
A single shot of espresso with hot milk and lots of froth.

Café au lait
A single shot of espresso with hot milk and a fine topping of froth.

Hot water
Ideal for preparing tea.

Coffee strength
Choice of five different strengths of coffee.

Cup size
Choice of five different cup sizes.

Hobs

AutoPowerPlus
Automatic: extra high power for the cooking zone, up to boiling point.

PowerPlus
Extra high power for the cooking zone, up to boiling point.

Pause button
Temporarily switch cooking zones to power level 1 for ten minutes.

Keep warm
Keeps cooked food warm at approx. 65 °C.

Automatic boost
Temporary full power, then switches back to the previous setting.

Acoustic timer
Can be used at any time independently of all other functions.

Operating time with shut-off function
Enables the cooking zone to be automatically switched off after a pre-set time.

Wipe protection
Deactivates the control panel so that the controls can be briefly cleaned.

Bridging function
Switches on two zones next to one other and controls them together.

Melting function
For gently melting e.g. butter, chocolate or honey at approx. 40 °C.

Simmer function
For simmering e.g. sausages or dumplings in hot water at below boiling point.

Ideal for meat
Automatically selects the ideal temperature for cooking meat.

Ideal for vegetables
Automatically selects the ideal temperature for cooking vegetables.

Ideal for fish
Automatically selects the ideal temperature for cooking fish.

Slider control
Gently sliding with one finger suffices – simple and ergonomic.

Set button sound
Change the volume of the button sounds or switch them off.

OptiClean
Cover the cooking surface with water and leave to soak at 70 °C for ten minutes.

ProfessionalMode
The power level for the cookware is adjusted by moving the cookware.

Memory function
Automatically transfers the settings for a cooking zone to a new cooking zone.

Teppanyaki function
Automatically detects the teppanyaki plate.

OptiLink
Range hood automatically regulates the air flow by communicating with the hob.

V-ZUG-Home
Appliance is network-enabled.

Rangehoods

Extraction
Cooking fumes are conveyed directly outside via an exhaust duct.

Recirculation air
Cooking fumes pass through an activated charcoal filter and are returned into the room.

FlexLED
LED with adjustable light colour for harmonious lighting.

Dim function
The intensity of the LEDs can be adjusted.

SilentPlus
Particularly quiet operation thanks to a specially insulated and lined hood.

Intensive setting
For quickly and powerfully extracting fumes, e.g. when frying.

Automatic run-on
Clears residual odours for 5 to 20 minutes.

Clean grease filter
Indicates that the metal grease filter requires cleaning.

Charcoal filter saturated
Indicates that the activated charcoal filter is saturated.

Wipe protection
Deactivates the control panel so that the controls can be briefly cleaned.

OptiLink
Range hood automatically regulates the air flow by communicating with the hob.

ComfortFix
Magnetic fastenings enable easy and safe detachment of the grease filter.

Edge extraction
Cooking fumes are extracted very quickly using surface extraction.

Dishwashers

Automatic
Intelligent sensors help to save water and energy.

SteamFinish
After drying, pure steam adds a shine.

Silent
The programme is so quiet the appliance is barely audible.

Everyday Short
Rapid programme for normally soiled loads including pans.

Short
Rapid programme for lightly soiled crockery.

Short/Glass
Rapid programme for glasses and snack bowls.

Party programme
Clean dishes in just 11 minutes.

Sprint
Extremely rapid programme for lightly soiled snack bowls.

Glass
Gentle programme – perfect for glasses.

Intensive
Programme for heavily soiled dishes including pans.

Fondue/Raclette
Gets fondue pots and raclette pans perfectly clean.

Hygiene
For particularly sensitive items such as chopping boards and baby bottles.

Pre-wash
Prevents odours in the dishwasher.

MachineCare
Degreases and cleans the interior and the components.

Part load
Saves water and energy if the dishwasher is not fully loaded.

Eco
If time is not important and you want to save lots of energy.

Energy saving
An additional programme – reduces the temperature and saves energy.

Delayed start
The programme starts automatically at a later time.

OptiStart
The programme starts automatically at a later time and saves energy.

EcoManagement
Provides information about how much water and energy the programme uses.

V-ZUG-Home
Appliance is network-enabled.

Refrigerators and freezers

NoFrost
With sophisticated NoFrost technology, defrosting is a thing of the past.

Separate temperature control
Temperatures in the fridge and freezer compartments can be set separately.

MonoFridge
Converts a freezer compartment into a normal refrigeration space in just a few hours.

FreshControl zone
Chilled food stays fresh for longer at approx. 0 °C and ideal humidity levels.

ClimateControl
Minimizes temperature differences and prevents ice build-up on the rear wall.

Cellar compartment
At 8 to 12 °C, it's ideal for foods that are sensitive to cold.

IceMachine
Integrated ice cube dispenser refills automatically.

PartyCooling
More powerful cooling for frequent door opening and loading with warm food.

ClickShelf
Shelf heights can be adjusted quickly and easily with just one hand.

SilentPlus
Minimizes disturbing noise with slightly increased power consumption.

SoftClose
Absorbs the door's momentum, closing it quietly and gently.

HygienePlus
Prevents harmful micro-organisms on surfaces.

V-ZUG-Home
Appliance is network-enabled.

InfinityShelf
Shelves suspended on sliding tracks can be freely positioned at any height.

TouchOpen
The no-handle glass door opens easily with a light touch.

Graphic display
The high-quality display enhances the appliance design.

Touch control
For conveniently controlling appliances.

SoftTelescope
Fully extendable drawers with self-closing runners and a soft-close mechanism.

FlexBox
Can be individually positioned and provides space for smaller groceries.

SoftClosePlus
The door closes particularly gently, even when fully loaded.

Adora washing machines

Washing load
Washing load of up to 8 kg.

Washing temperature
Temperatures for all fabric types.

Spin speed
Adjustable from 400 to 1400 rpm.

Spin speed
Adjustable from 400 to 1600 rpm.

Coloureds 20 °C
Energy-saving programme for lightly soiled fabrics.

Sprint
Additional quick-wash programme.

Wool
Gentle washing for woollens and delicate fabrics.

Hand wash
Very gentle washing of hand wash items.

WetClean
Optimal care of washable fabrics.

Favourites
Save and quickly start favourites.

Textile programmes
Range of programmes for different fabric types.

Degree of soiling
Selection from lightly soiled to anti-mite.

Easy care
Increased water level, reduced wash action and spin speed.

Pre-wash
Additional function for extremely dirty laundry.

Steam anti-crease
Reduces creasing using steam Iron dry when removed.

Steam anti-crease Plus
Extended steam anti-crease – ideal for linen.

Extra programmes
Additional selection of programme options.

Delayed start
Automatic delayed programme start up to 24 hours.

OptiTime
Smart delayed start function that makes the most of the time available.

AquaPlus
Reduces the risk of skin irritation through extra rinsing.

Turbidity sensor
Reduces water consumption by measuring the degree of soiling of the wash water.

Eco
Additional function for energy-saving washing.

EcoManagement
Statistics and prediction of water and energy consumption.

Drum lighting
True-colour interior lighting of the drum.

OptiDos
Automatic dosing of liquid detergent and/or fabric softener.

Appliance hygiene
Notification and programme for cleaning the appliance.

Proofing
Extra programme for gentle impregnation of fabrics.

V-ZUG-Home
Appliance can be networked via WLAN.

Adora heat pump dryers

Washing load
Washing load up to 7 kg.

Extra dry
For thick, multi-layered fabrics, dries items completely.

Standard dry
Programme for a load of similar items (t-shirts, underwear), dries items completely.

Iron dry
Programme leaves items slightly damp, ready for ironing.

Damp
Automatic programme for subsequent pressing with an ironing machine (table linen).

Timed drying
Items are dried for the selected duration.

Favourites
Save and quickly start favourites.

Textile programmes
Range of programmes for different fabric types.

Wool
Gentle drying of woollens at low temperatures.

Standard crease guard function.
Reduces creasing of damp fabrics.

Delayed start
Automatic delayed programme start up to 24 hours.

ReversePlus
For even drying and fewer tangles (bed linen).

Crease guard
Automatic reverse rotation after the end of the programme to loosen items.

Airing
Programme for freshening up dry fabrics without hot air.

Easy care
Additional function for drying mixed fabrics.

Ultra care
Additional function for drying delicates at a reduced temperature.

SilentPlus
Additional function for even quieter operation.

Sprint
Additional function for even quicker drying.

Eco
Additional function for energy-saving drying.

EcoManagement
Statistics and prediction of energy consumption.

Drum lighting
True-colour interior lighting of the drum.

Basket programme
Programme for drying clean fabrics and trainers in the basket.

Extra programmes
Additional selection of programme options.

Ambient air drying
Setting for drying washing on the line and dehumidifying rooms.

Humidity regulation programme
Automatic regulation of ambient air humidity over 7 days max.

V-ZUG-Home
Appliance can be networked via WLAN.

RefreshButler

Refresh
Neutralizes odours and refreshes clothing

Hygiene
Eliminates up to 99.99% of germs and bacteria.

Drying
Dries up to 5 kg of laundry without physical movement.

Delayed start
Automatic delayed programme start up to 24 hours.

Extra programmes
Additional selection of programme options.

V-ZUG

NSW

Brookvale
10-18 Orchard Rd
(02) 9938 4733

Crows Nest
113 Alexander St
(02) 9438 2611

Narellan
Unit 6-7, 8 Maxwell Pl
(02) 4636 9100

Newcastle
61 Darby St
(02) 4926 3636

Northmead
5a/6-8 Boundary Rd
(02) 9630 0588

Redfern
18 Danks St
(02) 9694 0000

Taren Point
12/120 Taren Point Rd
(02) 9589 5000

VIC

Brighton
757 Hampton St
(03) 8311 5665

Chadstone
Store B124
Chadstone Shopping Centre
1341 Dandenong Rd
(03) 8311 5600

Richmond
540 Swan St
(03) 9002 0400

ACT

Kingston
80 Giles St
(02) 6261 0000

QLD

Fortitude Valley
233 Barry Parade
(07) 3852 0000

Indooroopilly
U1, 272 Moggill Rd
(07) 3864 0000

WA

Joondalup
Shop T3, 1 Sundew Rise
(08) 9406 4300

Osborne Park
U3, 22 King Edward Road
(08) 9205 3000

O'Connor
U1, 2 Stockdale Rd
(08) 6332 0000

Myaree
63 Norma Road
(08) 6332 0050

Available Exclusively at

Winning appliances

winningappliances.com.au

@winningappliances

For more information, please contact

V-ZUG Australia Pty Ltd
2/796 High Street
East Kew Vic 3102

Tel.: 1300 VZUG AU
(1300 898 428)

vzug.com
service.au@vzug.com